OREGON DEPARTMENT OF TRANSPORTATION

CONSTRUCTION SECTION
MATERIALS LABORATORY
800 Airport Road
Salem, OR 97301
503/986-3000

LABORATORY MANUAL OF TEST PROCEDURES FEBRUARY 2017

Oregon
Kate Brown, Governor

Department of Transportation
Construction Services
800 Airport Road SE
Salem, OR 97301-4798
Phone: (503) 986-3000
Fax: (503) 986-3096

February 2017

TO: Materials Testing Manual Holders

SUBJECT: Laboratory Manual of Test Procedures

Attached is your copy of the new Oregon Department of Transportation Laboratory Manual of Test Procedures, February 2017.

This edition completely replaces the May 2016 Laboratory Manual of Test Procedures.

This manual has the current versions of our laboratory test procedures. However, if a test was identical to an AASHTO, ASTM, or MFTP procedure it was not duplicated in this manual.

Every effort has been made to make this manual complete and accurate. If you have questions or comments on the contents, format, or wording of this manual please let me know.

Kevin Brophy
Laboratory Services Manager

PREFACE

PURPOSE

This manual has been prepared to present the standardized test procedures for checking materials for conformance with Oregon Department of Transportation specifications. This is not designed as a field manual but is intended to be used in the Central Materials Laboratory and other offices for guidance, reference, and instruction.

The importance of accurate testing cannot be overemphasized. The cost of materials and the construction involved in a project represents many thousands of dollars and the entire investment can be jeopardized if the quality of materials is not verified and maintained.

SCOPE

This manual describes the test procedures that are currently in use in the Material Laboratory of the Construction Section. Methods of testing fall into four main groups:

1. Those which follow a national standard (not included in this manual).
2. Those which mainly follow a national standard but have been modified for use in our laboratory (only the modifications are in this manual).
3. Those that follow the Manual of Field Test Procedures (MFTP) (not included in this manual.
4. Those which have originated in our laboratory and are not described in national publications.

The original methods that have been developed in our laboratory are intended to supplement nationally recognized standards where they are inefficient in evaluating and processes in terms of highway service. The objective of these methods is to:

1. Measure a property that is of importance to performance in service.
2. Make the test as simple and straightforward as possible.
3. Reduce to a reasonable minimum the elapsed time necessary for completing the test.

FORMAT

The manual is divided into eight sections, containing individual test methods pertaining to that particular group. Each test method is assigned a unique serial number three digits long. A suffix number of two digits indicates the year in order to differentiate revisions. Thus, test 307-95 indicates test 307 was adopted in 1995. A subsequent revision of this test in 1998 would be 307-98.

ODOT LABORATORY TEST METHODS
WITH AASHTO, ASTM AND MFTP TEST REFERENCES

Description of Test	ODOT	AASHTO	ASTM	MFTP
Plastic Fines in Graded Aggregate and Soil by use of Sand Equivalent Test	TM 101 SOP			T 176
Determining the Liquid Limit of Soils	TM 102	T 89		
Determining the Plastic Limit and Plasticity Index of Soils	TM 103	T 90		
Correction for Coarse Particles in the Soil Compaction Test	TM 106			T 224
Determining Minimum Laboratory Soil Resistivity	TM 107	T 288		
Determining pH of Soil for Use in Corrosion Testing	TM 107	T 289		
Dry Preparation of Disturbed Soil and Soil Aggregate Samples for Testing	TM 108	R 58		
Moisture/Density Relations of Soils Using a 2.5 Kg Hammer and a 305 mm Drop	TM 109			T 99
Moisture/Density Relations of Soils Using a 4.54 Kg Hammer and a 457 mm Drop	TM 110			T 180
Specific Gravity of Soils	TM 111	T 100		
Torvane Shear/Soil Pocket Penetrometer	TM 117			
One Dimensional Consolidation Properties of Soils	TM 121A	T 216		
Unconsolidated, Undrained Compressive Strength of Cohesive Soils in Triaxial Compression	TM 122B	T 296		
Consolidated, Undrained Triaxial Compression Test on Cohesive Soils	TM 122C	T 297		
Cement Treated Base and Cement Treated Existing Roadway Material	TM 126			
Laboratory Determination of Moisture Content of Soils	TM 127			T 265

ODOT LABORATORY TEST METHODS
WITH AASHTO, ASTM AND MFTP TEST REFERENCES

Description of Test	ODOT	AASHTO	ASTM	MFTP
Determination of Organic Content in Soils by loss on Ignition	TM 129	T 267	D 2974	
Unconfined Compressive Strength of Cohesive Soil	TM 134	T 208		
Standard Test Method for Unconfined Compressive Strength of Intact Rock Core Specimens	TM 135		D 7012	
Particle Size Analysis of Soils	TM 150-153	T 88		
Direct Shear Test of Soils Under Consolidated Drained Conditions	TM 156	T 236		
Standard Test Method for Slake Durability of Shales and Similar Weak Rocks	TM 157		D 4644	
Unit Weight and Voids in Aggregate	TM 201			T 19
Specific Gravity and Absorption of fine Aggregate	TM 202			T 84
Specific Gravity and Absorption of Coarse Aggregate	TM 203			T 85
Sieve Analysis of Fine and Coarse Aggregates	TM 204			T 27
Amount of Material Finer than 75 µm Sieve in Aggregate	TM 205			T 11
Soundness of Aggregate by Use of Sodium Sulfate	TM 206	T 104		
Oregon Air Aggregate Degradation	TM 208			
Resistance to Degradation of Small Size Coarse Aggregate by Abrasion and Impact in the Los Angeles Machine	TM 211	T 96		
Organic Impurities in Fine Aggregate for Concrete	TM 212	T 21		
Determining the Percent of Fractured Particles in Crushed Aggregate				T 335

ODOT LABORATORY TEST METHODS
WITH AASHTO, ASTM AND MFTP TEST REFERENCES

Description of Test	ODOT	AASHTO	ASTM	MFTP
Clay Lumps and Friable Particles in Aggregate	TM 221	T 112		
Lightweight Pieces in Aggregate	TM 222	T 113		
Presence of Wood Waste in Produced Aggregates				TM 225
Dust or Clay Coating on Produced Coarse Aggregates for use in Highway Construction	TM 226-95			
Evaluating Cleanness of Cover Coat Material	TM 227			TM 227
Determination of Elongated Material in Coarse Aggregates				TM 229
Uncompacted Void Content Of Fine Aggregate (As Influenced By Particle Shape, Surface Texture And Grading)		T 304		
Reducing Field Samples of Aggregate to Testing Size				T 248
Resistance of Coarse Aggregate to Degradation by Abrasion in the Micro-Deval Apparatus			D7428	
Resistance to Deformation of Bituminous Mixtures by Means of Hveem Stabilometer	TM 303			
Compressive Strength of Bituminous Mixtures	TM 307			
Effect of Water on Compressive Strength of Compacted Bituminous Mixtures	TM 308		D 1075	
Moisture Content of Aggregates	TM 311			
Compressive Strength of Emulsified Asphalt Mixtures	TM 313			
Effect of Water Saturation And Freeze Thaw Cycle on Dense Graded Asphalt Concrete-Index of Retained Resilient Modulus	TM 315			
Adding Anti-Strip Additives or Lime to Mix Design Samples	TM 316			

ODOT LABORATORY TEST METHODS
WITH AASHTO, ASTM AND MFTP TEST REFERENCES

Description of Test	ODOT	AASHTO	ASTM	MFTP
Moisture Content of Bituminous Mixtures	TM 317			
Selection of Asphalt Content In Open-Graded Bituminous Mixes by the Draindown and ECS Procedure	TM 318			
Presence of Harmful Material in Recycled Asphalt Shingles				TM 335
Penetration of Bituminous Materials	TM 401	T 49		
Kinematic Viscosity of Asphalts (Bitumens)	TM 402	T 201		
Flash and Fire Points by Cleveland Open Cup	TM 404	T 48		
Ductility of Bituminous Materials	TM 407	T 51		
Solubility of Bituminous Materials	TM 409	T 44		
Testing Emulsified Asphalts	TM 411	T 59		
Softening Point of Bitumen (Ring-and-Ball Apparatus)	TM 412	T 53		
Loss on Heating of Oil and Asphaltic Compounds	TM 413		D 6	
Absolute Viscosity of Asphalts	TM 417	T 202		
Effect of Heat and Air on a Moving Film of Asphalt Binder (Rolling Tin-Film Oven Test)	TM 418	T 240		
C- Value Procedures	TM 425			
Vialit test for Aggregate Retention in Chip Seals “French Chip”	TM 426			
Torsional Recovery	TM 428			
Elastic Recovery	TM 429			
Absolute Viscosity	TM 430			
Bond Strength of Flexible Bituminous Adhesive	TM 432			

ODOT LABORATORY TEST METHODS
WITH AASHTO, ASTM AND MFTP TEST REFERENCES

Description of Test	ODOT	AASHTO	ASTM	MFTP
EPA TCLP Analysis	TM 503X	EPA Test Method 1311		
pH Determination of Water using digital pH/mv Meter	TM 504		E 70	
Procedure for Chloride Determination	TM 505	T 260		
Determination of Organic Matter in Soils by Wet Combustion	TM 512X	T 194		
Portland-Cement Content of Hardened Hydraulic-Cement Concrete	TM 523X	T 178	C 1084	
Chemical, Concrete Chloride Analysis	TM 525X	T 260		
Mass [Weight] of Coating on Aluminum-Coated Iron or Steel Articles	TM 540X	T 213	A 428	
Mass [Weight] of Coating on Iron and Steel Articles with Zinc or Zinc-Alloy Coatings	TM 541X	T 65	A 90	
Paint, Structural Coatings, Pre-Qualification	TM 580X		D 1475 D 2697 D 50 D 2369 D 562	
Traffic Paint	TM 591X		D 562 D 711 D 1475	
Glass Spheres, Traffic Paint	TM 593X		D 1214	
Weight – Per – Gallon Determination of Paints and Coatings	TM 613			
Determination of Zinc in Dry Films of Paints and Coatings	TM 614			
Flexural Strength of Concrete (Using Simple Beam-Third Front Loading)	TM 707	T 97	C 78	
Making and Curing Concrete Test Specimens in the Lab	TM 715		C 192	

ODOT LABORATORY TEST METHODS
WITH AASHTO, ASTM AND MFTP TEST REFERENCES

Description of Test	ODOT	AASHTO	ASTM	MFTP
Capping Cylindrical Concrete Specimens	TM 716	T 231	C 617	
Compressive Strength of Cylindrical Concrete Specimens	TM 719	T 22	C 39	
Water Retention Efficiency of Liquid Membrane-Forming Compounds and Impermeable Sheet Materials for Curing Concrete	TM 721			
Compressive Strength of Hydraulic Cement Mortar (Using 50 mm Cube Specimens)	TM 754X	T 106		
Rebar Splices (No. 3 through No. 8)	TM 920 AX TM 920 BX	T 244	A 370	
Aluminum, Physical Properties	TM 921X		B 557	
Guardrail Anchor Cable Assembly	TM 930X	T 244	A 370	
High Strength Bolt	TM 946X		F 606	
Chain Link Fence Fabric	TM 947X	M 181	A 370	
Steel Reinforcing (No. 3 through No. 8)	TM 950 AX TM 950 BX	M 31M	A 615	
Welded Wire Fabric	TM 952X	M 55	A 185/A	
Prestress or Post Tension Seven Wire Strand	TM 956X		A 1061M A 1061	
Barbed Wire	TM 958X	M 280	A 121	
Woven Wire Fence Fabric	TM 959X	M 279	A 116	
Fence Post (Studded Tee)	TM 960AX	M 281	A 702	
Tension Testing of Metallic Materials			E 8	
Measuring Length of Drilled Concrete Cores		T 148	C 174	
Brinell Hardness			E 10	
Rockwell Hardness			E 18	

ODOT LABORATORY TEST METHODS
WITH AASHTO, ASTM AND MFTP TEST REFERENCES

Description of Test	ODOT	AASHTO	ASTM	MFTP
Steel, Physical Properties		T 244	A 370	
Standard Practices for Load Verification of Testing Machines			E 4	

TABLE OF CONTENTS

SOILS	**SECTION 100**
AGGREGATE	**SECTION 200**
BITUMINOUS	**SECTION 300**
PETROLEUM	**SECTION 400**
CHEMISTRY	**SECTION 500**
PAINT	**SECTION 600**
CEMENT AND CONCRETE	**SECTION 700**
PHYSICAL TESTING	**SECTION 800**

SOILS

SECTION 100

SOILS - ODOT TEST METHODS
WITH AASHTO, ASTM AND MFTP TEST REFERENCES

Description of Test	ODOT	AASHTO	ASTM	MFTP
Plastic Fines in Graded Aggregate and Soil by use of Sand Equivalent Test	TM 101 SOP			T 176
Determining the Liquid Limit of Soils	TM 102	T 89		
Determining the Plastic Limit and Plasticity Index of Soils	TM 103	T 90		
Correction for Coarse Particles in the Soil Compaction Test	TM 106			T 224
Determining Minimum Laboratory Soil Resistivity	TM 107	T 288		
Determining pH of Soil for Use in Corrosion Testing	TM 107	T 289		
Dry Preparation of Disturbed Soil and Soil Aggregate Samples for Testing	TM 108	R 58		
Moisture/Density Relations of Soils Using a 2.5 Kg Hammer and a 305 mm Drop	TM 109			T 99
Moisture/Density Relations of Soils Using a 4.54 Kg Hammer and a 457 mm Drop	TM 110			T 180
Specific Gravity of Soils	TM 111	T 100		
Torvane Shear/Soil Pocket Penetrometer	TM 117			
One Dimensional Consolidation Properties of Soils	TM 121A	T 216		
Unconsolidated, Undrained Compressive Strength of Cohesive Soils in Triaxial Compression	TM 122B	T 296		
Consolidated, Undrained Triaxial Compression Test on Cohesive Soils	TM 122C	T 297		
Cement Treated Base and Cement Treated Existing Roadway Material	TM 126			
Laboratory Determination of Moisture Content of Soils	TM 127			T 265

SOILS - ODOT TEST METHODS
WITH AASHTO, ASTM AND MFTP TEST REFERENCES

Description of Test	ODOT	AASHTO	ASTM	MFTP
Determination of Organic Content in Soils by loss on Ignition	TM 129	T 267	D 2974	
Unconfined Compressive Strength of Cohesive Soil	TM 134	T 208		
Standard Test Method for Unconfined Compressive Strength of Intact Rock Core Specimens	TM 135		D 7012	
Particle Size Analysis of Soils	TM 150-153	T 88		
Direct Shear Test of Soils Under Consolidated Drained Conditions	TM 156	T 236		
Standard Test Method for Slake Durability of Shales and Similar Weak Rocks	TM 157		D 4644	

MATERIALS LABORATORY
ODOT Test Method 117-98

Method of Test for
TORVANE SHEAR / SOIL POCKET PENETROMETER

SCOPE

1.1 Torvane shear: this method measures the approximate shear strength of in-place or undisturbed Shelby tube cohesive soil samples.

Pocket Penetrometer: this method indicates consistency and approximate unconfined compressive strength of in-place or undisturbed Shelby tube cohesive soil samples.

Special Note: These tests do not replace field or laboratory testing analysis.

APPARATUS

2.1 Torvane shear tester set.

Pocket type soil penetrometer.

PROCEDURE

3.1 Follow the manufacturer's instructions.

MATERIALS LABORATORY
ODOT Test Method 126-98

Method of Test for

CEMENT TREATED BASE AND CEMENT TREATED EXISTING ROADWAY MATERIAL

SCOPE

1.1 This method describes the procedure for establishing a mix design (% passing 6.3 mm /4 in.) sieve vs. design kg/m^3 (Lbs/Ft.^{3}) for Cement Treated Base material. From the resulting curve a minimum allowable in place density can be determined, providing the percent passing the 6.3 mm (1/4 in.) sieve and the specified percent compaction is known. A particular curve, however, applies only to those Cement Treated Base mixtures containing aggregates and cement from the same source and production as those used in establishing the curve.

APPARATUS

2.1 Drying oven thermostatically controlled to 110 $\pm$ 3° C (230 $\pm$ 9° F).

2.2 Drying oven thermostatically controlled to 60 $\pm$ 3 ° C (140 $\pm$ 5° F).

2.3 Balance with capacity of 4500 grams, accurate to 0.1 gram.

2.4 Sample splitter, riffle type, 19 mm (3/4 in.) openings.

2.5 Sieves, U.S. Standard sizes, 25, 19, 12.5, 6.3, 4.75, 2.00 and .075 mm (1-in., 3/4-in., 1/2-in., 1/4-in., No. 4, No. 10, No. 20, No. 40 and No. 200).

2.6 Non-porous mixing bowl, 4 liter (1 gal.) capacity.

2.7 Metal scoop and large mixing spoon.

2.8 Measuring gauge and stand, Figure 5.

2.9 Split compaction mold, 102 mm (4 in.) diameter x 290 mm (11.5 in.) as shown in Figure 5.

2.10 Compression machine consisting of a 18 - 22 kN (20 - 25 ton) capacity hydraulic jack fitted with a spherically seated head and mounted in a 762 mm (30 inch) frame. (Figure 5)

2.11 Bottom and upper plunger for compression jack.

2.12 Special bench vise for holding compaction mold as shown in Figure 5.

2.13 Small carpenters level.

2.14 Glass or Plexiglas plates 150 x 150 mm (6in. x 6in.).

2.15 Testing machine with a minimum capacity of 15 kN (30,000 lbs.).

2.16 Bullet nosed rod, 9.5 mm (3/8 in.) diameter by approx. 500 mm (20 in.) long.

2.17 Hand tamper, 19 mm (3/4 in) diameter by approx. 500 mm (20 in.) long, weighing between 2700 2745 gr (6.00 ± .05 lbs.).

2.18 Tin or galvanized liner, 102 x 102 mm (4 x 4 in.) in diameter.

2.19 102 mm (4 in.) diameter filter paper (medium) filtration speed.

AGGREGATE PREPARATION

3.1 Dry aggregate at a maximum of 60° C (140° F).

3.2 Determine sieve analysis.

3.3 Retain the aggregates separated on each sieve size, 25, 19, 12.5, 9.5, 6.3, 4.75, 2.0, .425, .075 and P.075 mm (1, 3/4, 1/2, 3/8, 1/4, #4, #10, #40, #200 and P200).

CALCULATE TEST SPECIMEN GRADATIONS

4.1 Three gradations are required to obtain sufficient points for a reliable maximum density curve. The three gradations should be the specified maximum and minimum percentages passing the 6.3 mm (1/4 in.) sieve and at the midpoint of this range.

4.2 Obtain field test gradations and determine an average. Sieve and calculate the gradation of the sample submitted for use in the design. The gradation of the submitted sample must be reconciled to the field gradation.

4.3 To adjust the submitted sample gradation, a ratio of the submitted sample gradation (lab sample) to the field gradation for the percent retained on the 6.3 mm (1/4 in.) sieve (R 6.3 mm [1/4 in.]) and percent passing the 6.3 mm (1/4 in.) sieve (P 6.3 mm [1/4 in.]) fractions is determined. Example:

FIELD TEST%			LAB SAMPLE %		
53.8 %	25 mm (1in.)	2.0	63.6 %	25 mm (1in.)	1.1
	12.5 mm (1/2in.)	27.2		19 mm (3/4in.)	10.7
	6.3 mm (1/4in.)	24.6		12.5 mm (1/2in.)	25.6
				9.5 mm(3/8in.)	12.1
				6.3 mm (1/4in.)	14.1
46.2 %	R2.0 mm (no.10)	24.3	36.4 %	4.75 mm (no.4)	8..2
	P2.0 mm (Pno.10)	21.9		2.00 mm (no.10)	11.1
				.425 mm (no.40)	10.8
	R6.3 mm (1/4in.)	53.8		.075 mm (no.200)	3.9
	P6.3 mm (1/4in.)	46.2		P.075 mm (no.200)	3.0

4.3.1 The ratio for the R6.3 mm (R1/4in.) fraction is 53.8 / 63.6, and for P6.3 mm (P1/4in.) fraction is 46.2 / 36.4. These ratios are multiplied times each sieve size of the submitted sample to give the "gradation adjustment".

Adjusted Lab. Gradation

25 mm (1in.)	1.1		0.9
19 mm (3/4in.)	10.7	53.8	9.1
12.5 mm (1/2in.)	25.6		= 21.7
9.5 mm (3/8in.)	12.1	63.6	10.2
6.3 mm (1/4in.)	14.1		11.9
4.75 mm (no.4)	8.2		10.4
2.00 mm(no.10)	11.1	46.2	14.1
.425 mm (no.40)	10.2		= 12.9
.075 mm (no.200)	3.9	36.4	5.0
P.075 mm (P200)	3.0		3.8

4.3.2 Now the individual fractions of the "gradation adjustment" must be adjusted to the fractions of the field gradation. Note - The fraction for 25 - 12.5 mm (1 - 1/2in.) in the field gradation is 27.2%. The fractions for the R19 mm (R 3/4in.) and the R12.5 mm (R 1/2in.) in the gradation adjustment add up to 30.8%, thus the ratio of 27.2/30.8 is established. Likewise ratios for 12.5 - 6.3, 6.3 - 2.00, 2.00 - 0 mm (1/2 - 1/4in., 1/4in. - no.10, no.10 - 0) are respectively: 24.6/22.1, 24.3/24.5, and 21.9/21.7.

4.3.3 The ratios determined in 4.3.2 are then multiplied times each individual sieve size in its fraction to arrive at the "adjusted field gradation." For example:

Gradation Adjustment Determined in 4.3.1				Adjusted Field Gradation
25 mm (1in.)	0.9	27.2		2.0*
19 mm (3/4in.)	9.1		=	8.0
12.5 mm (1/2in.)	21.7	30.8		19.3
9.5 mm (3/8in.)	10.2	24.6		11.4
			=	
6.3 mm (1/4in.)	11.9	22.1		13.2
4.75 mm (no.4)	10.4	24.3		10.3
			=	
2.00 mm (no.10)	14.1	24.5		14.0
4.75 mm (no.4)	12.9	21.9		13.0
.075 mm (no.200)	5.0		=	5.0
P.075 mm (P200)	3.8	21.7		3.8

* Note that the R 25 mm (1in.) fraction is taken directly from the field gradation.

4.3.4 Since the retained on the 25 mm (1in.) sieve is not used in specimen fabrication, that percentage of material must be replaced by 19 and 12.5 mm (3/4 and 1/2in.) size material size material, so those fractions must be redistributed proportionally. Determine a ratio of the 3 fractions to the 2nd and 3rd fractions combined.

25 mm (1in.)	2.0	29.2
19 mm (3/4in.)	8.0	
12.5 mm (1/2in.)	19.2	27.2

This ratio is multiplied times the 19 and 12.5 mm (3/4 and 1/2in.) percentages to give the "test gradation" used in sample fabrication. If all material is passing the 25 mm (1in.) sieve, this step (4.3.4) is not necessary and the "adjusted field gradation" is used as the "test gradation".

25 mm (1in.)	2.0			0.0
19 mm (3/4in.)	8.0	29.2	=	8.6
12.5 mm (1/2in.)	19.3	27.2		20.7
9.5 mm (3/8in.)				11.4
6.3 mm (1/4in.)				13.2
4.75 mm (no.4)				10.3
2.00 mm (no.10)				14.0
.425 mm (no.40)				13.0
.075 mm (no.200)				5.0
P.075 mm (P.200)				3.8

4.3.5 Normally the above calculations (4.3 - 4.3.4) are done consecutively on a single sheet. (See Figure 4)

4.3.6 ODOT specifications require material passing the 6.3 mm sieve for 25 mm material to fall in the range of 40 - 55%. After the test gradation is determined, specified gradations are calculated proportionally to arrive at gradations where the passing 6.3 mm material equals 40, 47.5 and 55%, covering the specified range uniformly. In the example below, the R6.3 mm is 53.8% and the P6.3 mm is 46.2%. For gradation "G" where the desired 6.3 mm is 40% the ratios are 60.0/53.8 and 40/46.2 for R6.3 mm and P6.3 mm respectively. These ratios are multiplied times their individual sieve sizes to give the percentages in column "G". These percentages are used to batch out all samples for gradation "G" . The same process, using appropriate ratios is used to used to calculate gradations "H" and "J".

SIZE	Test Gradation%	P6.3 mm 40% G	P6.3 mm 47.5% H	P6.3 mm 55% J
25 mm	0.0	0.0	0.0	0.0
19 mm	8.6	9.6	8.4	7.2
12.5 mm	20.7	23.1	20.2	17.3
9.5 mm	11.4	12.7	11.1	9.5
6.3 mm	13.2	14.7	12.9	11.0
4.75 mm	10.3	8.9	10.6	12.3
2.00 mm	14.0	12.1	14.4	16.7
.425 mm	13.0	11.3	13.4	15.5
.075 mm	5.0	4.3	5.1	6.0
P.075 mm	3.8	3.3	3.9	4.5
R6.3 mm	53.8	60.0	52.5	45.0
		53.8	53.8	53.8
P6.3 mm	46.2	40.0	47.5	55.0
		46.2	46.2	46.2

PREPARATION OF TRIAL TEST SPECIMENS

5.1 It is essential that all specimens be compacted to a height of 102 ± 5 mm (4.0 ± 0.2 in.). To obtain specimens within this range, the proper quantity of aggregate must be used. Trial specimens are fabricated for this determination.

5.2 Trials specimens are fabricated at the coarse limit of the specified gradations. (Gradation "G" in 4.3.6) Since aggregates contain some moisture, three 500 or 1000 g samples for moisture determination are also batched at this time, using the same gradation as each of the test gradations. These samples are placed in an oven at 110° C following the procedure outlined in AASHTO T 255. The trial specimen is batched at 1750 g for height determination.

5.3 After testing of the moisture samples is complete, determine the dry weight of the batched sample for the purpose of calculating the weight of cement to be added.

Example:

1000 g moisture = 982.6 g after drying at 110° C.
1750 g dummy sample

$$\frac{982.6 \times 1750}{1000} = 1719.6 \text{ g dry weight}$$

5.4 Calculate cement percentage based on the dry weight of the sample.

Example:

1719.6 Dry weight from 5.3
x .055 = 5.5% cement (varies according to mix design)
94.6 g = cement addition

5.5 Determine the brand and type of cement to be used and screen it over the .850 mm (no. 20) sieve.

5.5.1 Weigh out the amount of cement calculated in 5.4, add it to the sample in a mixing bowl, and stir to distribute thoroughly.

5.6 Add sufficient water to produce a mix in which all aggregate surfaces are damp, but without free water. This is done by adding increments of water and mixing after each addition, until the desired moisture is obtained. This content is near optimum moisture. (This will usually be 120 mL to 140 mL water.)

5.7 Cover the bowl with a damp cloth and allow to hydrate 30 minutes. Record the amount of water added. (See Figure 2)

5.8 The sample is compacted as described in part 6 below, and the quantity of exudated water recorded. Optimum moisture content occurs when 8 - 11 mL of water is exudated from the sample during compaction.

5.9 After the sample is compacted, a height is taken with the extensiometer, (See Figure 5) picking a representative place on the surface of the sample to place the tip of the plunger. If the sample is a desirable height in the 97 - 107 mm (3.8 - 4.2in.) range, and the moisture exudated is a desirable amount, the trial sample may be used as a regular sample to be reported.

5.10 If the trial sample is not 97 - 107 mm or is not at the desired height, the gradation needs to be adjusted in this manner:

$$\frac{1750(102.3)}{110.4} = 1629.5$$

Air dried weight of sample = 1750 g
Height of completed sample = 110.4 mm
Desired height of sample = 102.8 mm

5.10.1 Each fraction of the gradation must be adjusted by this same factor:

$$\frac{1629\ g}{1750\ g} = 0.93086$$

Sieve Size	%	Cumulative Trial Grams 1750 x (0.93086)	=	Cumulative Test Grams 1629.0
19 mm (3/4in.)	9.6	168.0	=	156.4
12.5 mm (1/2in.)	23.1	572.3	=	532.7
9.5 mm (3/8in.)	12.7	794.5	=	739.6
6.3 mm (1/4in.)	14.7	1051.8	=	979.1
4.75 mm (no.4)	8.9	1207.5	=	1124.0
2.00 mm (no.10)	12.1	1419.3	=	1321.2
.425 mm (no.40)	11.3	1617.0	=	1505.2
.075 mm (no.200)	4.3	1692.3	=	1575.3
P.075 mm(P200)	3.3	1750.0	=	1629.0

5.11 Two more samples of the same gradation and total weight are treated like the first acceptable trial sample (5.4 - 5.9), but the moisture contents are adjusted to produce a complete compaction curve (ignore 5.6). It is desirable to have one specimen lose 8 - 11 mL, another lose 20 - 25 mL and the third have a 0 -5 mL loss. Operator judgment is involved in determining the proper water add.

5.12 Three samples are fabricated at each design gradation in the manner described above to determine maximum density at optimum moisture content for each gradation.

5.13 The moisture content of each specimen is calculated from the dry weight, initial moisture, and the moisture added. (See Figure 2)

COMPACTION OF TEST SPECIMENS:

6.1 Weigh a tin liner and 2 filter papers together. Record the weight (See Figure 2). Write the sample number on the liner.

6.2 Assemble the 102 mm (4in.) mold in the vise with the tin liner in place and the bottom plunger pinned three holes from the bottom. For some materials it may be necessary to pin the bottom plunger further away or closer to the bottom of the mold. The proper pin setting is determined during compaction of the trial specimen.

6.3 Set the mold upright on a solid block (concrete is best) at a convenient height. Put in one filter paper and put on the extension sleeve.

6.4 After 30 min. hydration time, weigh the bowl and contents , record the gross weight. (Figure 2) Spoon approximately 1/2 the sample into mold, cover the bowl with a damp cloth and rod 20 - 30 times around the edge of the mold with a 9.5 mm (3/8in.) bullet nosed rod to prevent rock pockets. Tamp with the 19 mm (3/4in.) faced small end of the 2725 g (6 lb.) tamper for 50 blows. Physical exertion in tamping should be only sufficient to move the tamper up and down approximately 100 mm (4in.) in travel. Guide the tamper over the entire surface of the specimen. The actual compactive effort should be provided only by the combined weights of the tamper and the operators hand. Avoid a smoothly compacted surface because it will result in a compaction plane in the specimen when the next layer is tamped, and will prevent the two layers from bonding.

6.5 Place the remaining portion of the sample in the mold, cover the bowl with a damp cloth, and rod the sample 20 - 30 times around the edge of the mold. Care must be taken to include the entire prepared sample, since the initial dry weight is used for density calculations. Tamp the second lift using 100 blows with the small 19 mm (3/4in.) end of the hand tamper. Level off the top of the compacted specimen by tamping lightly with the large 50 mm (2in.) end of the tamper in order to provide a smooth surface and an even plane at right angles to the axis of the mold. After tamping is complete remove the extension sleeve, brush down the sides of the mold and put on the filter paper.

6.6 Place the top plunger in position, then place the entire assembly on the hydraulic jack in the compression frame (See Figure 5). If necessary, place one or more of the spacing rings between the top plunger and the top of the frame to prevent excessive travel of the jack. Remove the pin that holds the bottom in place and gradually apply a total load of 111 kN (12 1/2 t). Use 1 minute to attain the first 89 kN (10 t.), 1/2 of a minute for the next 22 kN (2 1/2 t.), and hold at 111 kN (12 1/2 t.) for 1 minute. Then release the load, place the mold in the vise, take out the plungers, open the mold and remove the specimen with its tin jacket and 2 filter papers.*

* Caution: When removing the mold from the jack frame, be sure to hold the bottom plunger, so it doesn't fall out and cause injury.

6.7 Wipe any free water from the outside of the tin liner, clean any adhering sample from the mold, and put on top of specimen, then weigh (specimen, 2 filters and liner). Record the weight. (See Figure 2).

6.8 Weigh the dirty mixing bowl to get net sample weight. The difference between the net weight of the sample and the net weight of the specimen is the water loss. (Figure 2)

6.8.1 If the water loss for the sample does not fall in the 0-5 mL, 8-11 mL or 20-25 mL ranges, discard the sample, and adjust the moisture of subsequent samples accordingly.

6.9 Cap and seal specimen in its tin liner with metal or plastic lids and tape. Store in the moist room for 6 days to cure. Record the sample in the diary on the day it is to come out of the moist room (6th day) and the day it is to be tested for compressive strength. (7th day)

PROCEDURE FOR DETERMINATION OF COMPRESSIVE STRENGTH

7.1 After 6 days in the moist room, retrieve specimens, remove lid seals and liners. Transfer identifying marks from tin liner to side of specimen with wax pencil. Weigh and measure height in 5 places, (center and 4 quarters) and diameter in 4 places along the side. (the same 4 quarters) Record measurements on sheet in figure 1.

7.2 Immerse the specimen in water, at room temperature, for one day to complete the seven day curing period required for the compressive strength test.

7.3 The next day, remove the specimen from the water bath, pat the surfaces dry of free water with a cloth or towel, and cap ends of each specimen with plaster of paris as follows:

7.3.1 Select 2 glass or plastic plates approximately 150 x 150 mm (6in. x 6in.), for each specimen and place them on a level table or bench.

7.3.2 Oil lightly the top of each plate with a common motor lubricant, Measure into suitable container, about 1/4 L (1 cup) of plaster of paris for each specimen to be capped. Add water, and mix to a fairly thick paste. Place a spoonful of paste on every other plate and put a specimen on with some downward force. Level the top of the specimen with a small level.

7.3.3 Add another spoonful of paste on top of the specimen and a plate on top of that. Level this plate with the small level.

7.3.4 Trim excess plaster flush with the specimen circumference and plate using a stiff, 19 mm wide square ended spatula.

7.3.5 Allow the caps to harden for a minimum of 30 minutes and then remove the plates by tapping the edges lightly with a piece of soft wood. If difficulty is experienced in removing the plates, apply warm water and continue tapping lightly.

7.4 The specimen may be tested for compressive strength as soon as the glass plates are removed. Using a manila disc on each end, center specimen on platen of testing machine and apply load at 133 kN (30,000 lbs) per minute. Apply the load until ultimate failure of the test cylinder occurs. An initial failure will usually occur at about 80% of the load required for ultimate fracture. Record the total load at failure in kN (lbs). (See Figure 1)

CALCULATIONS AND REPORTS FOR CTB

8.1 Complete all calculations for Figures 1 and 2.

8.2 Transfer percent moisture, dry density, and compressive strength in kPa (psi), (I, K, and M on Figure 1), to the proper column on Figure 6 (Lab Report Sheet) for each sample.

8.3 Convert the gradation determined in 4.3.3 from “retained” gradation to a “passing” gradation and record at the top of the form in Figure 6. (Note that the example in 4.3.3 is taken from a different sample than the sample in Fig. 1, 2, 6, 7 and 8).

8.4 Graph the value “E” water loss versus “I” initial moisture from Figure 2, for each gradation as shown in Figure 7. Determine the range of moisture contents at 10 mL water loss and 20 mL water loss. Record these ranges of moisture contents on the lines labeled “Mix Moisture Content” in Figure 6.

8.5 Determine the “recommended cement content” based on compressive strength by applying the criteria found in the document ODOT CTB Mix Design Policy, or as determined by the project specifications.

8.6 At the bottom of Figure 6, a recommended weight for fabricating field CTB samples must be recorded. Dry aggregate weight is taken from item K on Figure 2, the cement weight from item L on Figure 2, and water from (M-K)M+N on Figure 2. The total weight is the sum of these three components.

8.7 As shown in Figure 8, percent passing 6.3 mm (1/4 in.) sieve is graphed versus dry density at 10 mL water loss. This density is determined by interpolating the known densities at water losses above and below 10 mL. These values are multiplied by 0.95 and a second curve is generated. This curve determines the minimum density required on the job at a given percent passing the 6.3 mm (1/4in.) sieve. Each point located on the graph is labeled with its corresponding moisture content.

8.8 The sheets corresponding to Figures 6 and 8 are distributed as part of the Lab. Report. All other work sheets and forms are kept on file.

CEMENT TREATED EXISTING ROADWAY MATERIAL (C-TERM)

SCOPE

9.1 This method describes the procedure as it varies from the CTB. method, for establishing a minimum dry density curve versus percent retained on the 25 mm (1in.) sieve for material which will be mixed in place, unlike the CTB. material which is plant mixed. Mixing conditions of the test should simulate job site mixing conditions. Except for the method of calculating the gradation of the sample, and the method of mixing, it is essentially the same as described in the CTB procedure above.

AGGREGATE PREPARATION

10.1 Aggregate preparation is the same as described in section 3 except that the 4.75 mm (no. 4) sieve is the smallest sieve size used in this preparation. All smaller material is labeled passing 4.75 mm (no. 4) A bulk specific gravity (ODOT TM 203) and percent absorption test is run on the material retained on the 25 mm (1 in.) sieve.

TEST SPECIMEN GRADATION

11.1 The gradation used for test specimens is that which is determined in section 3.2, the sieve analysis. Only one gradation is used, and the material retained on the 25 mm (1in.) sieve is not used.

PREPARATION OF A TRIAL SPECIMEN

12.1 This section is the same procedure as described in 5.1 - 5.13 except:

In place of 5.5.1 - 5.7 read: Weigh out the amount of cement calculated in 5.4 and add it to the sample in the sealable container, seal the container and shake, by inverting vigorously ten times. Carefully open the container (cement may collect in the lip of the lid) and add water to the sample. The proper amount to add is based on operator judgment. 130 $\pm$ 20 mL is normally a good amount. Reseal the container and invert vigorously ten more times. Open the container and scrape the material off the lid and sides into the container. Replace the lid seal with tape, and allow to cure 60 minutes. Record the amount of water added.

COMPACTION OF TEST SPECIMEN

13.1 The method of compaction of the specimen is identical to section 6 with three exceptions: In section 6.4 hydration time is 60 minutes instead of 30 minutes and a sealable container is used instead of a mixing bowl. In 6.9 the sample will come out of the moist room on the 7th day.

PROCEDURE FOR DETERMINATION OF COMPRESSIVE STRENGTH

14.1 All procedures are the same as in section 7 except that:

The sample does not come out of the moist room after 6 days, as stated in 7.1 but remains the full 7 days. Then it is taken out of the moist room, its liner removed, it is weighed and measured as outlined in 7.1, capped (as described in 7.3) and tested for compressive strength as in 7.4. Section 7.2 can be ignored and no immersion takes place.

CALCULATIONS AND REPORTS FOR C-TERM

15.1 Complete calculations on sheets in Figures 1 and 2 for C-TERM as for C.T.B. samples, except that in place of bowl weight, etc. use container weight. In addition, the sheet in Figure 3 must be completed.

15.2 Report the dry densities and other test results on a lab report sheet (Figure 3). Calculate the dry density and moisture percent using these formulas:

Dd = (Bulk Specific Gravity)(62.4)(%r1") + (Dry Density of Test Specimen)(%P1")

%M = (Moisture SSD)(%R1") + (Optimum Moisture %)(%P1")

Values for Bulk Specific Gravity and Moisture SSD are obtained from the test performed in Section 10 (OSHD TM 203).

Metric formula:

Dd = (Bulk Gravity) (999.6) (%R25 mm) + (Dry Density of test specimen) (%P25 mm)

%M = (Moisture SSD) (%R25 mm) + (Optimum Moisture %) (% P25 mm)

15.3 The form in Figure 3 is distributed as the lab report. Forms in Figures 1 and 2 are retained in the files.

METRIC C.T.B. SAMPLE CALCULATIONS

Sample Number B - 6 - II		
Description	Abbr.	Measurement
Aggr. Size ..... 25 mm (1in. - 0)		
Height		100.025 mm (3.938)
		100.355 mm (3.951)
		100.025 mm (3.938)
		99.898 mm (3.933)
		100.101 mm (3.941)
Avg. Ht.	(A)	100.081 mm (3.940)
Diameter		101.676 mm (4.003)
		101.448 mm (3.994)
		101.575 mm (3.999)
		101.651 mm (4.002)
Avg. Dia.	(B)	101.588 mm (4.000)
Radius	(C)	50.794 mm (2.000)
R squared	(D)	2580.030 mm
πr^2 (Area)	(E)	8105.398 mm
πr^2 x HT (Volume)	(F)	811,358.4 mm^3
Volume	(G)	.00081 m^3
Wet Wt. kg		1.8978 kg
Dry Wt. kg	(H)	1.7511kg
Dry Density kg/m^3	(K)	2162 kg/m^3
Moisture %	(I)	9.3
Total Load in kN	(L)	89.805 kN
Load kPa	(M)	11,080 kPa

$$C = \frac{B}{2}$$

$$D = (C)^2$$

$$E = 3.1416\,(D)^2$$

$$F = \frac{(E)\,(A)}{F}$$

$$G = \frac{F}{10^9}$$

$$H = \frac{\text{H From Figure 2}}{1000}$$

$$K = \frac{H}{G}$$

I = I From Figure 2

L = Compressive Strength

$$M = \frac{L}{10^6\left[\frac{E}{\ }\right]}$$

Figure 1

ODOT Test Method 126-98

C.T.B. SAMPLE CALCULATIONS

Sample Number B - 6 - II		
Description	Abbr.	Measurement
Dry weight of material g	(K)	1662.0
Weight of cement g	(L)	92.6
Total Wt. g	(A)	1754.6
Wet weight of material g	(M)	1775.0
Weight of cement g	(P)	92.6
Subtotal g	(R)	1867.6
Water added g	(N)	50.0
Total Wt. g	(B)	1917.6
Weight of sample & bowl g	(S)	2183.5
Wt. of bowl g	(T)	269.7
Wt. of sample g	(C)	1913.8
Wt. of sample and liner g	(U)	2005.3
Wt of liner g	(W)	100.1
Wt. of sample g	(D)	1905.2
Water loss g	(E)	8.6
Mix loss wet g	(F)	3.8
Mix loss dry g	(G)	3.5
Corr. Dry Wt. g	(H)	1751.1
Initial Moisture	(I)	9.3
Final Moisture	(J)	8.8

$A = K + L$

$B = R + N$

$C = S - T$

$D = U - W$

$E = C - D$

$F = B - C$

$$G = \frac{A\,(F)}{B}$$

$H = A - G$

$$I = \left[\frac{C}{H} - 1\right]100$$

$$J = \left[\frac{D}{H} - 1\right]100$$

$R = M + P$

Figure 2

GRADATION ADJUSTMENT

SIZE	AVG. FIELD GRAD.	LAB SAMPLE % RETAINED		GRAD. ADJUST.		ADJ. FLD. GRAD.		TEST GRAD.
25 mm (1in.)	2.0	1.1		0.9		2.0		0.0
					27.2		29.2	
19mm (3/4in.)	-----	10.7		9.1	30.8	8.0	27.2	8.6
12.5mm (1/2in.)	27.2	25.6	53.8	21.7		19.3		20.7
			63.6					
9.5 mm (3/8in.)	------	12.1		10.2		11.4		11.4
					24.6			
6.3 mm (1/4in.)	24.6	14.1		11.9	22.1	13.2		13.2
4.75 mm (no.4)	------	8.2		10.4		10.3		10.3
					24.3			
2.0 mm (no.10)	24.3	11.1		14.1	24.5	14.0		14.0
.425 mm (no.40)	24.3	10.2	46.2	12.9		13.0		13.0
			36.4		21.9			
.075 mm (no.200)	24.3	3.9		5.0	21.7	5.0		5.0
P.075 mm (P200)	21.9	3.0		3.8		3.8		3.8
TOTAL	100.0	100.0						
R6.3 mm (R1/4in.)	53.8	63.6						
P6.3 mm (P1/4in.)	46.2	36.4						

FIGURE 3

AGGREGATE

SECTION 200

AGGREGATE - ODOT TEST METHODS
WITH AASHTO, ASTM AND MFTP TEST REFERENCES

Description of Test	ODOT	AASHTO	ASTM	MFTP
Unit Weight and Voids in Aggregate	TM 201			T 19
Specific Gravity and Absorption of fine Aggregate	TM 202			T 84
Specific Gravity and Absorption of Coarse Aggregate	TM 203			T 85
Sieve Analysis of Fine and Coarse Aggregates	TM 204			T 27
Amount of Material Finer than 75 µm Sieve in Aggregate	TM 205			T 11
Soundness of Aggregate by Use of Sodium Sulfate	TM 206	T 104		
Oregon Air Aggregate Degradation	TM 208			
Resistance to Degradation of Small Size Coarse Aggregate by Abrasion and Impact in the Los Angeles Machine	TM 211	T 96		
Organic Impurities in Sand for Concrete	TM 212	T 21		
Determining the Percent of Fractured Particles in Crushed Aggregate				T 335
Clay Lumps and Friable Particles in Aggregate	TM 221	T 112		
Lightweight Pieces in Aggregate	TM 222	T 113		
Presence of Wood Waste in Produced Aggregates				TM 225
Dust or Clay Coating on Produced Coarse Aggregates for use in Highway Construction	TM 226-95			
Evaluating Cleanness of Cover Coat Material	TM 227			TM 227
Determination of Elongated Material in Coarse Aggregates				TM 229

AGGREGATE - ODOT TEST METHODS
WITH AASHTO, ASTM AND MFTP TEST REFERENCES

Description of Test	ODOT	AASHTO	ASTM	MFTP
Uncompacted Void Content Of Fine Aggregate (As Influenced By Particle Shape, Surface Texture And Grading)		T 304		
Reducing Field Samples of Aggregate to Testing Size				T 248
Resistance of Coarse Aggregate to Degradation by Abrasion in the Micro-Deval Apparatus			D7428	

Oregon
Kate Brown, Governor

Department of Transportation
Construction Services
800 Airport Road SE
Salem, OR 97301-4798
Phone: (503) 986-3000
Fax: (503) 986-3096

May 2016

TO: Materials Testing Manual Holders

Section: Test Procedure AASHTO T-84 (Specific Gravity and Absorption of Fine Aggregate)

The Oregon Department of Transportation has specified method(s) for the Test Procedure. Please observe the following for our projects:

- **Add the following to the end of Section 7.2.1:**

7.2.1 If the material is to coarse to perform the cone test, split the material on the #8 screen. Perform a T84 on the passing #8 material and a T85 on the retained #8 material.

Oregon
Kate Brown, Governor

Department of Transportation
Construction Services
800 Airport Road SE
Salem, OR 97301-4798
Phone: (503) 986-3000
Fax: (503) 986-3096

May 2016

TO: Materials Testing Manual Holders

Section: Test Procedure AASHTO T-85 (Specific Gravity and Absorption of Coarse Aggregate)

The Oregon Department of Transportation has specified method(s) for the Test Procedure. Please observe the following for our projects:

- **For #4 – 0 AC aggregate change Section 7.2 to the following:**

7.2 Thoroughly mix the sample of aggregate and reduce it to the approximate quantity needed using the applicable procedures in T 248. Sieve all material over a 4.75-mm (No. 4) sieve by dry sieving and thoroughly washing to remove dust or other coatings from the surface. Separate the material finer than the 4.75-mm (No. 4) sieve and test the finer material according to T 84. If a substantial quantity of material is retained on the 4.75-mm (No.4) sieve (a substantial amount is defined as 15% retained on the 4.75-mm (No. 4) sieve), use the 2.36-mm (No. 8) sieve in place of the 4.75-mm (No. 4) sieve. Separate the material retained on the 2.36-mm (No.8) sieve and test according to T 85. Separate the material finer than the 2.36-mm (No. 8) sieve and test the finer material according to T 84.

- **For #4 - #8 AC aggregate only change Section 7.2 to the following:**

7.2 Thoroughly mix the sample of aggregate and reduce it to the approximate quantity needed using the applicable procedures in T 248. Reject all material passing a 2.36-mm (No. 8) sieve by dry sieving and thoroughly washing to remove dust or other coatings from the surface. If the coarse aggregate contains a substantial quantity of material finer than the 2.36-mm (No.8) sieve (a substantial amount is defined as 15% passing the No. 8 sieve), separate the material retained on the 2.36-mm (No.8) sieve and test according to T 85. Separate the material finer than the 2.36-mm (No. 8) sieve and test the finer material according to T 84.

- **For all other aggregate change Section 7.2 to the following:**

7.2 Thoroughly mix the sample of aggregate and reduce it to the approximate quantity needed using the applicable procedures in T 248. Sieve all material over a 4.75-mm (No. 4) sieve by dry sieving and thoroughly washing to remove dust or other coatings from the surface. Determine if the material has a substantial amount passing the 4.75-mm (No.4) sieve (a substantial amount is defined as 15% passing the 4.75-mm (No. 4) sieve

7.2.1 If the material does not have a substantial amount of material passing the 4.75-mm (No. 4) sieve, separate the material retained on the 4.75-mm (No. 4) sieve and test according to T 85. The material finer than the 4.75-mm (No. 4) sieve shall not be tested.

7.2.2 If the material does have a substantial amount of material passing the 4.75-mm (No. 4) sieve, use the 2.36-mm (No. 8) sieve in place of the 4.75-mm (No. 4) sieve. Separate the material retained on the 2.36-mm (No.8) sieve and test according to T 85.

7.2.2.1 If the material does have a substantial amount of material passing the 4.75-mm (No. 4) sieve, determine if the material has a substantial amount passing the 2.36-mm (No.8) sieve (a substantial amount is defined as 15% passing the No. 8 sieve). If the material does not have a substantial amount of material passing the 2.36-mm (No.8) sieve, the material finer than the 2.36-mm (No.8) sieve shall not be tested.

7.2.2.2 If the material does have a substantial amount of material passing the 2.36-mm (No.8) sieve, separate the material passing the 2.36-mm (No.8) sieve and test according to T 84.

MATERIALS LABORATORY

ODOT Test Method 208-12

Method of Test for

OREGON AIR AGGREGATE DEGRADATION

SCOPE

1.1 The degradation test method described below is designed to measure the quantity and qualityof the material produced by attrition similar to that produced in the roadway under repeatedtraffic loading and unloading. The quantity is indicated by a percentage (by weight) of fine material produced. The quality is measured by means of a modified sand equivalent test. The fine material is made by the rubbing action of one particle against another in the presence of water by means of air jets.

APPARATUS

2.1 Large Laboratory-Type Jaw Crusher, Universal Engineering Corp. Model No. 2SS or an equivalent means of breaking the quarry run aggregate sample into fragments reasonably uniformly graded in size and shape.

2.2 Small Laboratory-Type Jaw Crusher, Universal Engineering Corp. Model No. 1 M or an equivalent means of breaking the prepared coarse aggregate sample into fragments reasonably uniformly graded in size and shape.

2.3 Sieves, 25.0, 6.3, 4.75, 2.00, .850, .106 and .075 mm conforming to ASTM Specification E 11, for Wire-Cloth Sieves for test purposes.*

2.4 Micro Sample Splitter, Testlab Corp., Cat. No. S2531 or equivalent with chute width of 6.3 mm.

2.5 Oven maintained at 110 $\pm$ 5 degrees C.

2.6 Hydrometer Jar or a Glass Graduate, 460 mm (18 in.) in height and 64 mm (2 1/2 in.) in diameter of a 1000 ml capacity.

2.7 Air Dispersal Unit (See Figure 1) with flow valve pressure gauge and seven jets constructed of the parts listed in the assembly drawing.

2.8 Sand Equivalent Tube used in the FOP for AASHTO T176; Test for Plastic Fines in Graded Aggregates and Soils by Use of the Sand Equivalent Test, or a graduated plastic cylinder 31.8 mm (1.25 in.) inside diameter and 432 mm (17in.) in length with graduations in tenths of an inch beginning at the bottom of the cavity. Inch marks are to be numbered.

2.9 Timer or Clock, reading in minutes and seconds or hundredths of a minute.

REAGENTS AND MATERIALS

3.1 Sand Equivalent Test Stock Solution - Prepare the stock calcium chloride solution with the following:

2050 grams (1640 milliliters) of USP glycerin
454 grams (1 pound) technical anhydrous calcium chloride
47 grams (45 mL.) formaldehyde (40 volume percent solution)

Dissolve the calcium chloride in 2 L (1/2 gal.) of distilled or demineralized water. Cool the solution, then filter it through ready-pleated medium rapid filtering filter paper. Add the glycerin and formaldehyde to the filtered solution, mix well, and dilute to 3.8 L (1 gal.) with distilled or demineralized water.

SAMPLE PREPARATION

4.1 The degradation test sample shall be obtained from the following materials as indicated:

4.1.1 Uncrushed Quarry Run Rock: The material shall be crushed once only through a large jaw crusher adjusted to obtain 37.5 to 0 mm (1-1/2 to 0 in.) material (approximate jaw opening: 25 mm [1in]). Screen the crushed material, or a representative portion, to obtain at least 5 Kg (10 lbs.) of material passing the 25 mm (1 in.) sieve and retained on the 6.3 (1/4 in.) sieve and at least 2.5 Kg (5 lbs.) of material passing the 6.3 mm (1/4 in.) sieve.

4.1.2 Uncrushed Pit Run Gravel - Screen the uncrushed gravel as received or a representative portion, to obtain at least 5 Kg (10 lbs.) of material passing the 25 mm (1in.) sieve and retained on the 6.3 mm (1/4 in.) sieve and at least 2.5 Kg (5 lbs.) of material passing the 6.3 mm (1/4 in.) sieve.

4.1.3 Crushed Quarry Rock or Crushed Gravel - Screen the material as received, or a representative portion, to obtain at least 5 Kg (10 lbs.) of material passing the 25 mm (1in.) sieve and retained on the 6.3 mm (1/4 in) sieve and at least 2.5 Kg (5 lbs. of material Passing the the 6.3 mm (1/4 in.) sieve.

Note: If any of the above types of material are to be scalped on a designated size sieve for use then that portion of the sample retained on that size shall be separated and prepared as in 4.1.1.

Also if a specific size range is to be tested; example 6.3 – 12.5 mm (1/4 -1/2 in.) substitute this range for the 12.5 - 25 mm (1/2 - 1 in.) material in the above material types as needed.

TEST SPECIMEN PREPARATION

5.1 Crush all the prepared 6.3 to 25 mm (1/4 to 1 in.) sample or the required size range. The material shall be crushed once only through a small jaw crusher adjusted to obtain 0 to 9.5 mm (0 to 3/8 in.) material (approximate jaw opening: 6.3 mm (1/4 in.). Using the 4.75, 2.00 and .850 mm (No. 4, 10, and 20) sieves, screen the crushed material for 5 minutes with not more than 200 gms on the 2.00 mm (No. 10) sieve.

5.2 With the use of a sample splitter, divide the .850 to 2.00 mm (No. 20 to 10) material into portions of approximately 130 g each.

5.3 Wash one of the aggregate portions from 5.2 The portion to be washed shall be placed in a container and covered with water. The contents of the container shall be agitated vigorously and the wash water poured immediately over a No. 200 sieve. The use of a large spoon to stir and agitate the aggregate in the wash water has been found satisfactory. The operation shall be repeated until the wash water is clear.

5.4 Oven dry the washed portion to a constant mass in accordance with the FOP for AASHTO 255 and rescreen 110 ± 1 g of the dried material for 10 minutes on the .850 mm (No. 20) sieve. Obtain a 100 ± .05 g test specimen from the material retained on the .850 mm (No. 20) sieve.

PROCEDURE

6.1 Place the 100 g test specimen into a 1000 mL hydrometer jar and add 100 mL of distilled water. This amount of water will cover most samples to a height of 25 mm (1in.) above the top of the material. Some materials that have a low bulk gravity will require additional water to raise The water level 1 inch above the sample surface. (Some vesicular materials require 200 mL of water)

6.2 Check the air dispersal apparatus by turning on the air pressure to 20 psi and set the flow valve, then examine each air jet making sure they are clean and the air flow is not restricted because of partial clogging with fine material.

6.3 The air dispersal unit has six jets symmetrically placed in a horizontal plane and point downward at 45° from the horizontal and one jet at the base pointing vertically downward. It has wall guides and a stop to maintain an almost fixed position inside the hydrometer jar. A constant air flow is maintained by means of a pressure flow valve and pressure gauge.

6.4 After the air is turned on and adjusted to 38 kPa (20 psi) insert the dispersal apparatus into the hydrometer jar until the stop is reached, then give it a turn of approximately 45° which causes the test material to rise off the bottom of the hydrometer jar. Timing begins when the dispersal unit is adjusted in the jar. Wash down any material thrown above the wall guide as needed.

6.5 At the end of 20 minutes lift the air dispersal apparatus above the water level; then turn off the air supply. Wash down the dispersal unit with a fine stream of distilled water to remove small sample particles that adhere to the unit, then remove the unit from the hydrometer jar.

6.6 Pour 7 mL. of sand equivalent stock solution into an empty sand equivalent tube and place the tube below a funnel to catch degraded fines and water from the hydrometer jar. Place a 106 mm (No. 140) sieve in the top of the funnel. Pour the contents from the hydrometer jar on the screen and rinse the jar lightly to remove the bulk of the material from the jar. Excessive rinsing will overfill the tube, therefore, place a .075 mm (No. 200) sieve in the sink and rinse the remaining material from the jar onto this sieve.

Return to the .106 mm (No. 140) sieve and using a fine stream of distilled water wash the material in the screen and shake gently by hand, using about 15 mL of water each washing. Repeat this process screen and shake gently by hand, using about 15 mL of water each washing. Repeat this process 10 to 15 times until the sand equivalent tube is filled to a height of 381 mm (15 in.).

6.7 Put a stopper in the sand equivalent tube and shake the contents until all material is moving about freely, then continue mixing by inverting the tube 25 times allowing the air bubble movement to control the cycle interval.

6.8 At the conclusion of the mixing time place the sand equivalent tube in an upright position and start the timer. Read and record the sediment height to the nearest 2.5 mm (0.1in.) after 20 minutes of undisturbed settlement.

6.9 Remove the .106 mm (No. 140) sieve containing the .106 to 2.00 mm (No. 140 to 10) material from the top of the funnel wash onto the No. 200 sieve which has the same material from step 6.6, and allow to drip dry for a few minutes, then place the .075 mm (No. 200) sieve and the contents in the oven at 110 $\pm$ 5° C to a constant mass in accordance with the FOP for AASHTO 255.

6.10 Upon completion of the drying time, remove from the oven, cool to room temperature, and screen for 10 minutes on a .850 mm (No. 20) sieve. Weigh the quantity retained on the .850 mm (No. 20) sieve to the nearest 0.01 g.

REPORT

7.1 Determine and record the following information from the test results:

P .850 mm (No. 20) = percent of aggregate passing .850 mm sieve to nearest 0.1 percent.

H = Sediment height in the sand equivalent tube to the nearest 2.5 mm (0.1 in).

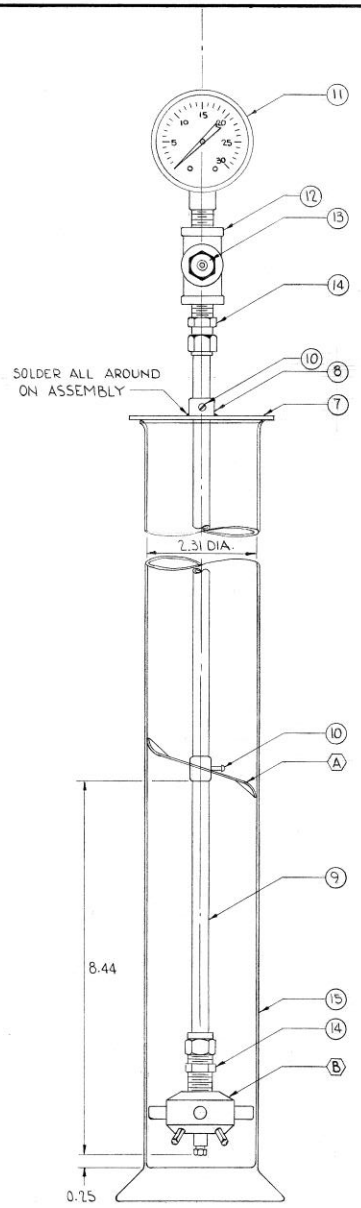

ASSEMBLY VIEW
(ONE HALF SCALE)

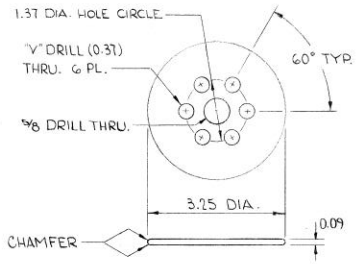

7 PERFORATED PLATE
(ONE HALF SIZE)

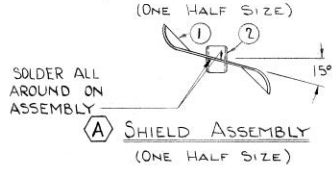

A SHIELD ASSEMBLY
(ONE HALF SIZE)

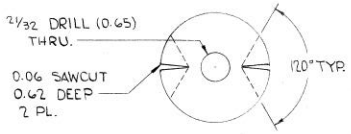

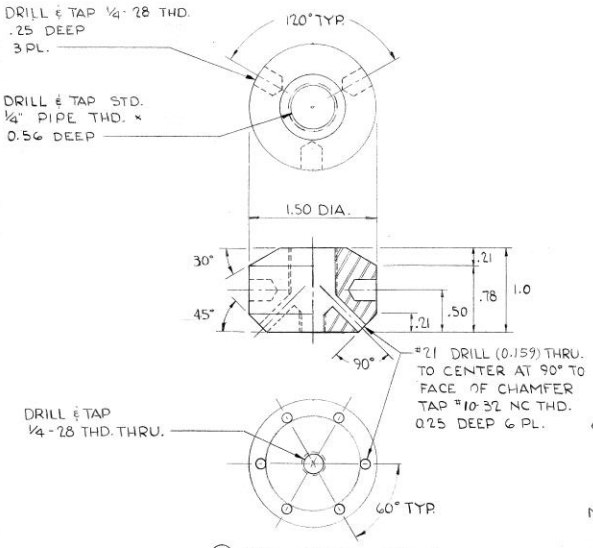

3 DISCHARGE HEAD
FULL SIZE

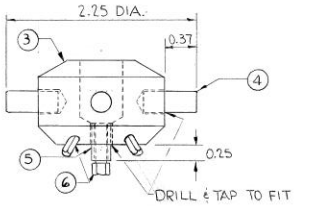

B DISCHARGE HEAD ASSEMBLY
FULL SIZE

NOTE:
1. SMOOTH MACHINE ALL PARTS. REMOVE ALL BURRS. BREAK ALL EDGES & CORNERS.

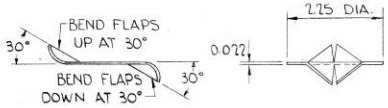

1 SHIELD BLADE
(ONE HALF SIZE)

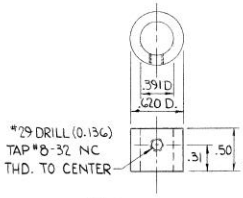

8 PLATE HUB
(FULL SIZE)

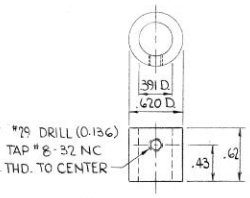

2 SHIELD HUB
(FULL SIZE)

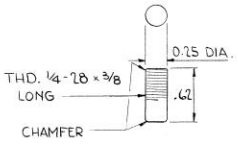

4 PIN
(FULL SIZE)

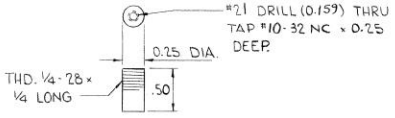

5 BOTTOM STUD
(FULL SIZE)

LIST OF MATERIAL

ASSEM	NO. REQ.	PART NO.	DESCRIPTION	STOCK SIZE	MATERIAL
A			SHIELD ASSEMBLY		
	1	1	SHIELD BLADE	23 GA. × 2¼ DIA.	BRASS
	1	2	HUB	5/8 DIA. × 5/8	BRASS
B			DISCHARGE HEAD ASSEMBLY		
	1	3	HEAD	1½ DIA. × 1	BRASS
	3	4	PIN	¼ DIA. × 5/8	BRASS
	1	5	BOTTOM STUD	¼ DIA. × ½	BRASS
	7	6	JET	ZENITH CARB VENT # C77-14-16 #10-32 THD	
	1	7	PERFORATED PLATE	11 GA. × 3¼ DIA.	BRASS
	1	8	PLATE HUB	5/8 DIA. × ½	BRASS
	1	9	TUBE	3/8 O.D. × 5/32 I.D. × 17	BRASS
	2	10	MACH. SCREW RD. HD.	#8-32 × 3/8	
	1	11	GAUGE	MARSHALTOWN 0-30# PRESSURE GAGE	
	1	12	TEE	STD. ¼ PIPE TEE	GALV.
	1	13	HOSE INSERT	¼ HOSE × ¼ I.P.S.	
	2	14	BRASS COMPRESSION CONNECTOR W/SLEEVE - 3/8 O.D. TUBE × ¼ I.P.S.		
	1	15	HYDROMETER JAR	STD.	GLASS

OREGON STATE HIGHWAY DEPARTMENT
MATERIALS AND RESEARCH DIVISION

OREGON DEGRADATION APPARATUS

Oregon
Kate Brown, Governor

Department of Transportation
Construction Services
800 Airport Road SE
Salem, OR 97301-4798
Phone: (503) 986-3000
Fax: (503) 986-3096

May 2016

TO: Materials Testing Manual Holders

Section: Test Procedure AASHTO T96 (Resistance of Small-Size Coarse Aggregate by Abrasion and Impact in the Los Angeles Machine)

The Oregon Department of Transportation has specified method(s) for the Test Procedure. Please observe the following for our projects:

o **Add Provision 8 to AASHTO T96-02 (2010):**

8 Add the following new sections after Section 8.1 of ASTM C 131-01:

8.2 If the material is a crushed product and is not able to closely meet the requirements of Section 8.1, then it is allowable to crush material to provide adequate amount of material to closely meet the requirements of Section 8.1

8.3 If the material is an uncrushed product and is not able to closely meet the requirements of Section 8.1, then it is allowable to modify table 1 to allow a reduced number of grading sizes (A, B, C, D) to a minimum of a single size. The total sample size should still meet the total sample size listed in table 1.

Oregon
Kate Brown, Governor

Department of Transportation
Construction Services
800 Airport Road SE
Salem, OR 97301-4798
Phone: (503) 986-3000
Fax: (503) 986-3096

May 2016

TO: Materials Testing Manual Holders

Section: Test Procedure AASHTO T-113 (Lightweight Pieces in Aggregate)

The Oregon Department of Transportation has specified method(s) for the Test Procedure. Please observe the following for our projects:

- **Change Section 7.1 to the following:**

7.1 *Fine Aggregate* – Allow the dried test specimen of fine aggregate to cool to room temperature and then sieve over a 300-µm (No. 50) sieve until less than 1 percent of the retained material passes the sieve in 1 min of continuous sieving. Determine the mass of the material coarser than the 300-µm sieve to the nearest 0.1 g and saturate and seal in a container for 15-18 hours. After the 15-18 hour time elapses, visually check the material for saturated surface-dry condition and bring to visual saturated surface-dry condition if necessary. Introduce the heavy liquid (Note 1) into the container until the volume of liquid is at least three times the absolute volume of the aggregate. Agitate the sample for a minimum of 15 seconds. Allow the material to sit for 2-5 minutes to allow the sample to settle. Pour the liquid, including only the floating pieces (with a minimal amount of suspended pieces), into a second container, passing it through the skimmer, taking care that only the floating pieces (and a minimal amount of suspended pieces) are poured off with the liquid and that none of the fine aggregate that sinks is decanted onto the skimmer. Return to the first container the liquid that has been collected in the second container and, after further agitation of the sample by stirring, allow the material to sit for 2-5 minutes prior to repeating the decanting process. Repeat the decanting process just described until the specimen is free of floating pieces. Wash the decanted pieces contained on the skimmer in an appropriate solvent to remove the heavy liquid taking care not to lose any of the collected floating particles. Alcohol is appropriate for 1, 1, 2, 2-tetrabromoethane and water for the zinc chloride and zinc bromide solutions. After the decanted pieces have been washed allow them to dry (Section 7.1.2). Brush the dry decanted pieces from the skimmer onto the balance pan and determine the mass to the nearest 0.1 g. If more precise determination is required, the decanted particles shall be dried to constant mass at 110 ± 5°C to determine the value of W_1 used for the calculation in Section 8.1. (See Section 7.1.3)

MATERIALS LABORATORY
ODOT Test Method 226-95

Method of Test for Determining

DUST OR CLAY COATING ON PRODUCED COARSE AGGREGATES FOR USE IN HIGHWAY CONSTRUCTION

SCOPE

1.1 This method of test covers a procedure to determine the amount of dust coating remaining on the coarse aggregates after they have been subjected to wet screening by ODOT TM 205 (Amount of Material Finer Than 0.075 mm Sieve in Aggregate).

1.2 The values stated in SI units are regarded as the standard.

APPARATUS

2.1 The apparatus shall consist of the following:

2.1.1 Pan of sufficient size to contain the sample in a single layer covered with 25 mm (1in.) of water.

2.1.2 Balance - The balance shall be sensitive to within 0.1 g.

2.1.3 Sieves - Nested 4.75 mm (No. 4) and .075 mm (No. 200) sieves.

2.1.4 Brush - Any typical paint brush may be used.

2.1.5 Liquid dishwashing detergent is a suitable wetting agent.

2.1.6 Oven - The oven shall be capable of maintaining a temperature of 110 ± 5° C (230 ± 9° F).

SAMPLE

3.1 The sample shall be obtained by quartering the total material retained on the 6.3 mm (1/4 in.) sieve, after the sample has been tested for sieve analysis AASHTO T 27/11. The sample shall weigh 1200 ± 250 g.

PROCEDURE

4.1 Dry sample to a constant mass at 110 ± 5° C (230 ± 9° F).

4.2 Weigh the sample and record mass to the nearest gram.

4.3 Place sample in a flat pan spreading it into a single layer.

4.4 Cover the sample with water to a depth of 25 mm (1 in.) over the entire surface. Clean tap watermay be used, if the water shows no sign of contamination. Add a suitable wetting agent to the water, (approximately 5 g per liter of water). Allow the sample to soak for 15 to 30 minutes to permit the wetting agent to penetrate the sample.

4.5 Brush the aggregate under water to remove the coating of dust. Each particle in the sample should be manipulated by the brush and fingers.

4.6 Pour the aggregate onto a 4.75 mm (No. 4) screen above a 0.75 mm (No. 200) screen, washing away any coating material with tap water.

4.7 Place the aggregate from the 4.75 mm (No. 4) and 0.75 mm (No. 200) screens in a pan and dry in the oven to a constant mass.

4.8 Weigh the dried aggregate and record the mass.

REPORT

5.1 Where "A" represents the original dry mass of the samples as in 4.2.

"B" represents the mass of the uncoated aggregate in 4.8.

$$\frac{A - B}{A} \times 100 = \text{percent coating}$$

5.2 Report: Coating = (nearest 0.01 percent)

Oregon
Kate Brown, Governor

Department of Transportation
Construction Services
800 Airport Road SE
Salem, OR 97301-4798
Phone: (503) 986-3000
Fax: (503) 986-3096

May 2016

TO: Materials Testing Manual Holders

Section: Test Procedure ASTM D7428 (Standard Test Method for Resistance of Fine Aggregate to Degradation by Abrasion in the Micro-Deval Apparatus)

The Oregon Department of Transportation has specified method(s) for the Test Procedure. Please observe the following for our projects:

- **Change Section 8.2 to the following:**

8.2 Aggregate for the test sample shall consist of material passing the 4.75-mm (No. 4) sieve, retained on the 75-µm (No. 200) sieve with a Fineness Modulus of 2.8. An oven dried sample of 500 ± 5 g shall be prepared as follows:

Passing	Retained	Mass
4.75-mm (No. 4)	2.36-mm (No. 8)	150 g
2.36-mm (No. 8)	1.18-mm (No. 16)	350 g

BITUMINOUS

SECTION 300

BITUMINOUS MIXTURES - ODOT TEST METHODS WITH AASHTO, ASTM AND MFTP TEST REFERENCES

Description of Test	ODOT	AASHTO	ASTM	MFTP
Resistance to Deformation of Bituminous Mixtures by Means of Hveem Stabilometer	TM 303			
Compressive Strength of Bituminous Mixtures	TM 307			
Effect of Water on Compressive Strength of Compacted Bituminous Mixtures	TM 308		D 1075	
Moisture Content of Aggregates	TM 311			
Compressive Strength of Emulsified Asphalt Mixtures	TM 313			
Effect of Water Saturation And Freeze Thaw Cycle on Dense Graded Asphalt Concrete-Index of Retained Resilient Modulus	TM 315			
Adding Anti-Strip Additives or Lime to Mix Design Samples	TM 316			
Moisture Content of Bituminous Mixtures	TM 317			
Selection of Asphalt Content In Open-Graded Bituminous Mixes by the Draindown and ECS Procedure	TM 318			
Presence of Harmful Material in Recycled Asphalt Shingles				TM 335

MATERIALS LABORATORY
ODOT Test Method 303-95

Method of Test for

RESISTANCE TO DEFORMATION OF BITUMINOUS MIXTURES BY MEANS OF HVEEM STABILOMETER

(Mod. AASHTO Designation T 246)

SCOPE

1.1 This test will provide for determining the resistance to deformation of compacted bituminous mixtures using the Hveem Stabilometer, the lateral pressure developed from applying a vertical load.

APPARATUS

2.1 Stabilometer - The Hveem Stabilometer is a triaxial testing device consisting of a Neoprene sleeve within a metal cylinder containing a liquid which registers the horizontal pressure developed by a compacted test specimen as a vertical load is applied. (Fig. 1)

2.2 Calibration Cylinder - A hollow metal cylinder 101.6 ± 0.13 mm (4 ± 0.005 in.) outside diameter by 140 mm (5.5 in.) high for calibration purposes.

2.3 Follower - One metal follower 101.2 mm (3.985 in.) in diameter by 140 mm (5.5 in.) high. (Fig. 2)

2.4 Testing Machine - A compression testing machine having a minimum capacity of 44.5 kN (10,000 lb.).

2.5 Oven - An oven capable of maintaining a temperature of 60 ± 3° C (140 ± 5° F).

ADJUSTMENT OF STABILIMOMETER

*Refer to Method No. Calif. 902 for details on the mechanics of the Hveem Stabilometer including the operation, calibration and the installation of the neoprene diaphragm.

3.1 Calibrate the displacement of the stabilometer by the following procedure:

3.1.1 Adjust bronze nut on stabilometer stage base so that the top of the stage is 89 mm (3.5 in.) below the bottom of the upper tapered ring.

3.1.2 Place the metal calibration cylinder in the stabilometer. Turn the pump to a pressure of exactly 34.5 kPa (5 psi). Tap the stabilometer dial lightly with the fingers in order to be sure the needle is resting at 34.5 kPa (5 psi) pressure. Adjust the turns indicator dial to zero. Turn pump handle at approximately two turns per second until the stabilometer reads 689 kPa (100 psi). The turns indicator dial should then read 2.00 ± 0.05 turns. If it does not, the air in the cell must be adjusted by means of the needle valve and the displacement measurement must be repeated after each air change until the proper number of turns is obtained. Release horizontal pressure and remove cylinder. The stabilometer is now ready for testing specimens.

ADJUSTING TEST MACHINE

4.1 Adjust the testing machine to give a constant movement of 1.3 mm (0.05 in.) per minute with no load applied. The hydraulic machines must be run several minutes before the oil warms sufficiently to maintain a constant speed.

TEST SPECIMENS

5.1 Test specimens shall be molded and compacted as specified in AASHTO T-166.

PROCEDURE

6.1 Bring the specimen to a temperature of 60 ± 3° C (140 ± 5° F) holding in the oven on glass plates a minimum of 8 hours.

6.2 Adjust the stabilometer base so that the distance from the bottom of the upper tapered ring to the top of the base is 89 mm (3.5 in.) Adjust the amount of air in the air cell so that when the liquid pressure is increased from 34.5 to 689 kPa (5 to 100 psi) by turning the pump handle at the approximate rate of two turns per second, the turns indicator will read 2.00 ± 0.05 with the metal calibration cylinder in the meter chamber.

Note: First place a 100 mm (4 in.) manila paper disc in the stabilometer and a 100 mm (4 in.) filter paper on top of the specimen to act as bond breakers. Also make certain the displacement crank is backed off sufficiently to avoid friction between diaphragm and sample. The sample must be straight with tamped end up and firmly seated level on the base.

6.3 Adjust the pump to give a horizontal pressure 34.5 kPa (5 psi). The pressure should be exact as a deviation of only 6.9 kPa (1 psi) has considerable effect on the final value.

6.4 Start vertical movement of testing machine platen at the speed of 1.3 mm (0.05 in.) per minute and record the stabilometer gauge readings when the vertical applied load pressures are 2.23, 4.45, 8.90, 13.4, 17.8, 22.3 and 26.7 kN (500, 1000, 2000, 3000, 4000, 5000 and 6000 lbs.) total load (Figure 5).

6.5 Stop vertical loading exactly at 26.7 kN (6000 lb) and immediately reduce the load to 4.45 kN (1000 lbs.).

6.6 Turn displacement pump to indicate a reduced horizontal pressure of exactly 34.5 kPa (5 psi). This will result in a further reduction in the vertical load reading which is normal and no compensation is made. Set the turns displacement indicator dial to zero. Turn pump handle at approximately two turns per second until the stabilometer gauge reads 689 kPa (100 psi). During this operation the vertical load registered on the testing machine will increase and in some cases exceed the initial 4.45 kN (1000 lb.) load. As before, these changes in testing machine loading are characteristic and no adjustment or compensation is required

6.7 Record the number of turns indicated on the dial as the displacement, Di, of the specimen. The turns indicator dial reads in 0.004 mm (0.001 in.) and each 0.4 mm (0.1 in.) is equal to one turn. Thus, a reading of 6.63 mm (0.250 in.), indicates that 2.50 turns were made with the displacement pump. This measurement is known as turns displacement of the specimen.

CALCULATION

7.1 Calculation of stabilometer values.

$$S = \frac{22.2}{\frac{Ph\ Di}{Pv - Ph} + .222}$$

Where:

Pv = vertical pressure typically 2760 kPa (400 psi)
Ph = horizontal pressure (stabilometer reading in kPa).
Ph taken at the instant Pv is 2760 kPa (400 psi).
Di = turns displacement of specimen.

PRECAUTIONS

8.1 Every effort should be made to fabricate test specimens having an overall height between 61 mm and 66 mm (2.4 and 2.6 in.), however, if for some reason this is not possible, the stabilometer value should be corrected.

8.2 Adhere strictly to the temperature control requirement.

8.3 Frequent calibration of the stabilometer should be made during the day as temperature change has considerable effect upon the pressure exerted within the hydraulic system.

8.4 Close adherence to the 34.5 kPa (5 psi) initial horizontal pressure is necessary for accuracy of test results.

8.5 When setting 34.5 kPa (5 psi) horizontal pressure always drop below 34.5 kPa (5 psi) then bring pressure back up to 34.5 kPa (5psi) and gently tap dial, to remove slack in dial indicator gear.

RECOMPACTION

9.1 If second compaction results are desired, invert the samples, return them to their molds, place in an oven and heat them at 120° C (248° F) for 4 hours minimum.

9.2 Recompact the samples following the procedure in AASHTO T 247, sections 4.2 – 4.4.

9.3 Retest the samples for stability, following this procedure in sections 6.1 - 8.5. Be certain to test the samples in a position inverted from the first stability tests.

9.4 After the second stability tests, allow the samples to cool and determine bulk specific gravity by AASHTO T 166.

9.5 If void content is desired, break up samples and test for maximum specific gravity according to AASHTO T 209.

REPORTING RESULTS

10.1 Report the result of the stabilometer test as the numerical value obtained as shown under "Calculations". This value represents the relative resistance to lateral deformation on a scale ranging from 0 for liquids to 100 for solids.

Report results on test report, Data Sheet 1, Figure 5.

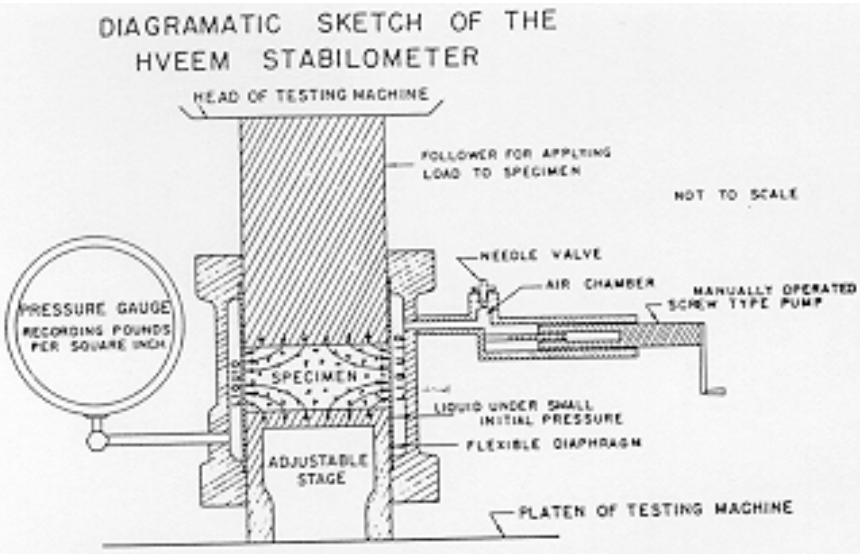

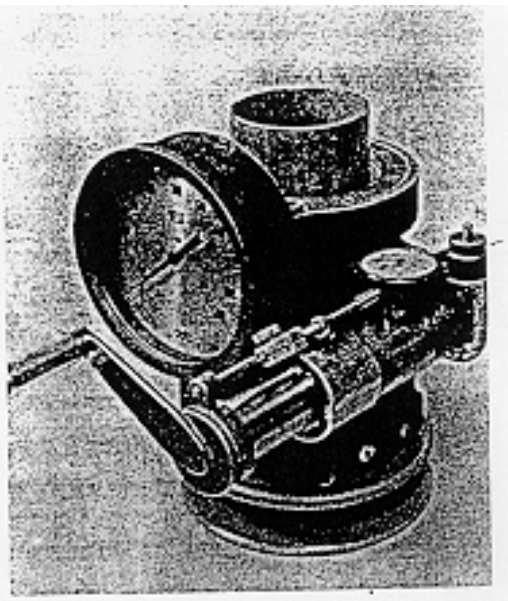

FIGURE 1

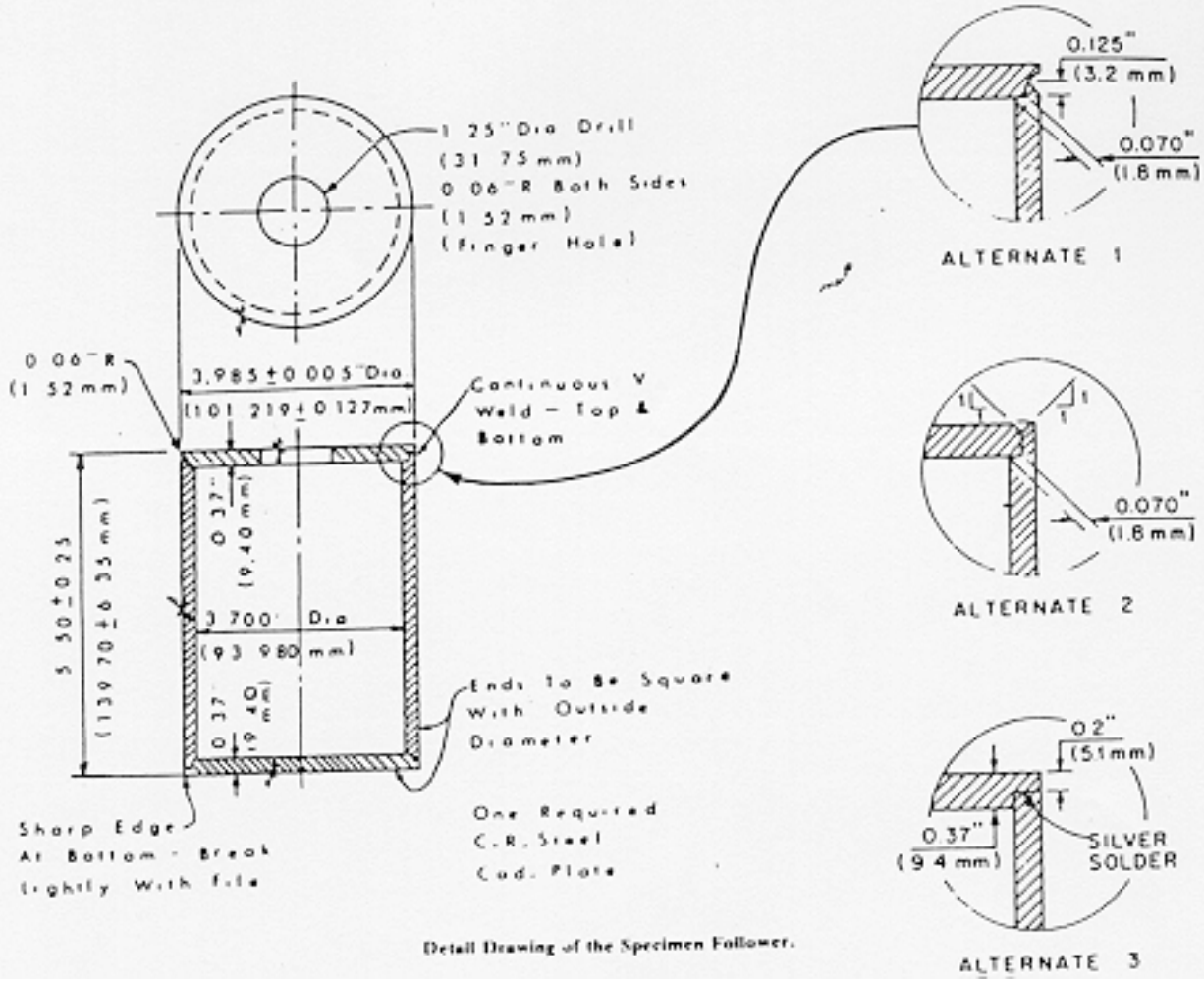

Detail Drawing of the Specimen Follower.

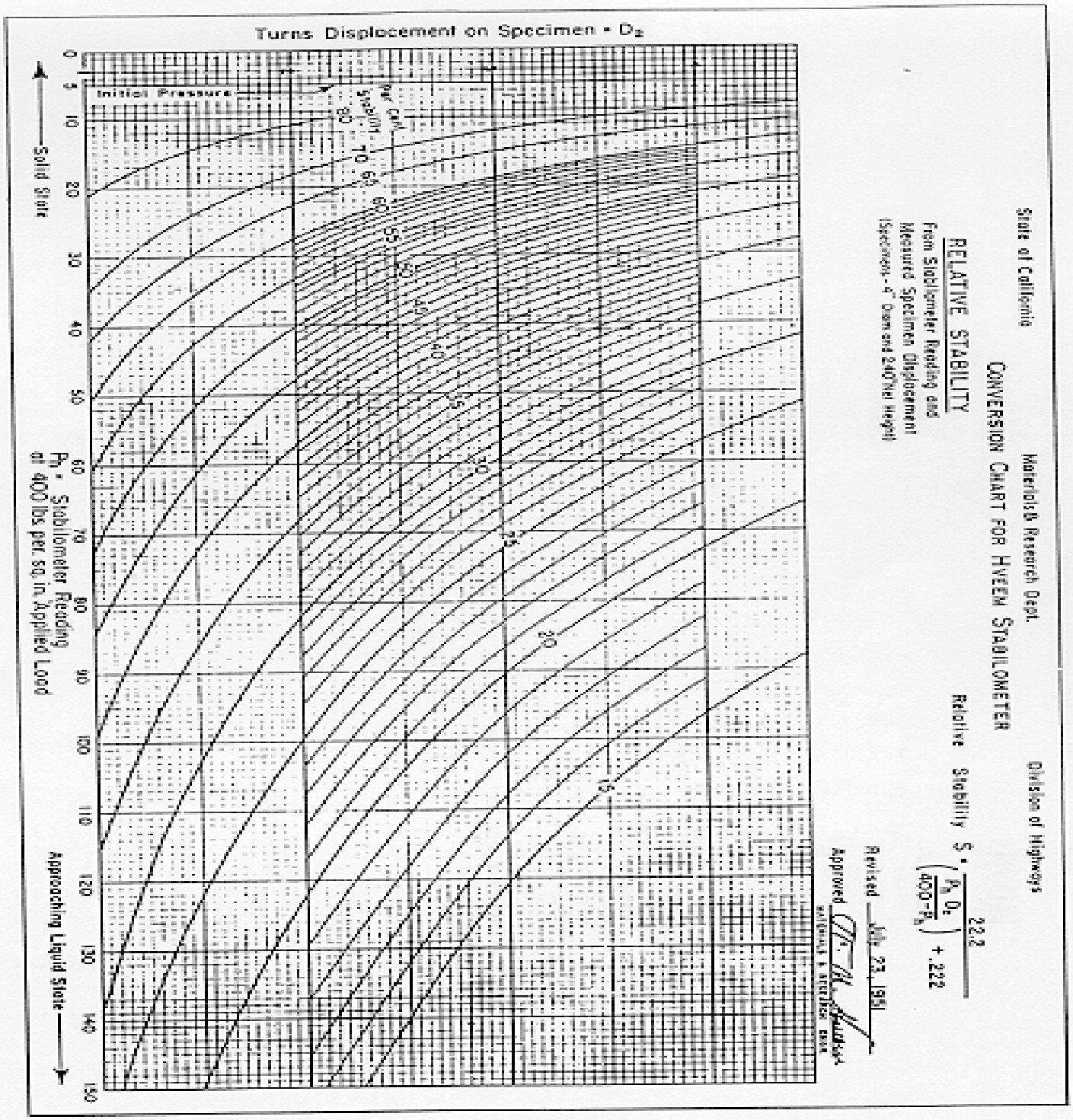

Reading 43 @ 5000, with 3.12 turns = 38 Stability, Ht = 2.40 using chart for correction on page 6, 38 = 38

FIGURE 3

CHART FOR CORRECTING STABILOMETER VALUES
TO SPECIMEN HEIGHT OF 64 mm

Height correction should be made using
the table and chart below.

Example: Overall height of 69mm;
select correction curve "B". Stabilometer
value uncorrected = 35
Stabilometer value corrected = 38.

Overall Specimen Ht.	Correction Curve
71mm to 76mm	A
66mm to 70mm	B
61mm to 65mm	C
56mm to 60mm	D
51mm to 55mm	E

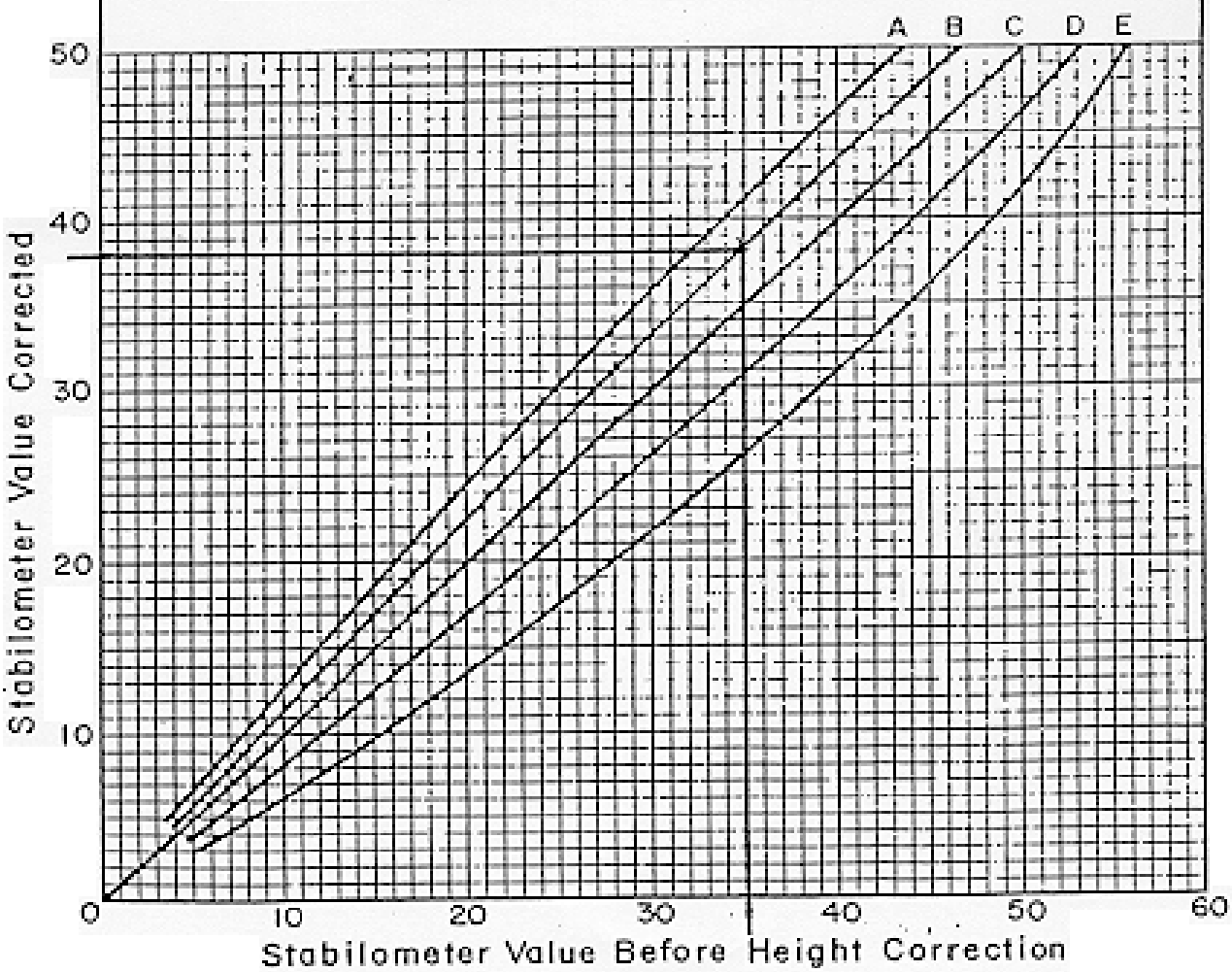

FIGURE 4

EXAMPLE

BITUMINOUS MIX DATA SHEET

PROJECT:			
Contract #:			
Source :			
Mix class :			
Mix no. :		Date :	

Asphalt Lab Number	
Brand of Asphalt	
Asphalt Grade / PBA #	
Additives :	
Percent	

STOCKPILE SPLITS

Stockpile :		Stockpile :		Stockpile :		Stockpile :	
@ Percent:		@ Percent:		@ Percent:		@ Percent:	

AGGREGATE WT. OF SAMPLE = gm. TOTAL WT. OF SAMPLE = gm.

SAMPLE MOLD #						
PERCENT ASPHALT						
Gm. OF ASPHALT						
TOTAL WT. OF SAMPLE						
MIXING TEMPERATURE						
ASPHALT FILM THICKNESS						
SURFACE CONDITION						

1ST COMPACTION

HEIGHT OF BRICK		2.40					
STABILITY	500	9					
	1000	12					
GAUGE	2000	17					
	3000	23					
READING	4000	30					
	5000	39					
AT	6000	50					
DISPLACE TURNS		3.12					
STABILITY NUMBER		20/30					
SPECIFIC GRAVITY							
PERCENT VOIDS							
DRY WT. OF MATERIAL							
WET WT. OF MATERIAL							
IMMERSED WT. OF MAT.							
VOLUME OF MATERIAL							

2ND COMPACTION

HEIGHT OF BRICK		2.30					
STABILITY	500	9					
	1000	11					
GAUGE	2000	15					
	3000	18					
READING	4000	22					
	5000	26					
AT	6000	32					
DISPLACE TURNS		54/50*					
STABILITY NUMBER							
SPECIFIC GRAVITY							
PERCENT VOIDS							
DRY WT. OF MATERIAL							
WET WT. OF MATERIAL							
IMMERSED WT. OF MAT.							
VOLUME OF MATERIAL							
SURFACE CONDITION							
MAXIMUM Sp Gr.							

*Corrected by graph for Height other than 2.500.

FIGURE 5

MATERIALS LABORATORY

ODOT Test Method 307-95

Method of Test for

COMPRESSIVE STRENGTH OF BITUMINOUS MIXTURES

(Modified AASHTO Designation: T 165 & 167)

SCOPE

1.1 This method of test for compacted bituminous mixtures of the hot-mixed, hot-layed type for use in pavement surfaces and base courses is intended to provide a measure of the compressive strength of these paving mixtures. The test results are used to evaluate potential moisture damage.

APPARATUS

2.1 Molds - Molding cylinders and appurtenances are shown in Fig. 1.

2.1.1 Steel compaction mold - 101.6 ± 0.05 mm (4.0 ± 0.002 in.) inside Diameter.
114 mm (4.5 in.) outside diameter
123 mm (4.85 in.) height

Molds are provided with hold down ears to secure mold to compactor turntable.

Mold base is a cylindrical disc attached within mold to support test specimen, 101 ± 0.1 mm (3.98 ± 0.005 in.) x 9 mm (0.37 in.) height, secure and flush with bottom surface of mold by two set screws.

2.2 Testing Machine - The testing machine may be of any type of sufficient capacity that will provide a range of accurately controllable rates of vertical deformation. Since the rate of vertical deformation for the compression test is specified as 1.3 mm (0.05 in.) per minute per 25 mm (1 in.) of specimen height; and it may be necessary to test specimens ranging in size from 50 by 50 mm (2 by 2 in.) to perhaps 200 by 200 mm (8 by 8 in.), in order to maintain the specified minimum ratio of specimen diameter to particle size, the testing machine should have a range of controlled speeds covering at least 2.5 mm (0.1 in.) per minute for 50 mm (2 in.) specimens to 10 mm (0.4 in.) per minute for 200 mm (8 in.) specimens. For central control laboratory installations, the testing machine shall conform to the requirements of Methods of Verification of Testing Machines (AASHTO T 67).

The testing machine shall be equipped with two steel bearing blocks with hardened faces, one of which is spherically seated and the other plain. The spherically seated block shall be mounted to bear on the upper surface of the test specimen and the plain block shall rest on the platen of the testing machine to form a seat for the specimen. The bearing faces of the plates shall have a diameter slightly greater than that of the largest specimens to be tested. The bearing faces, when new, shall not depart from a true plane by more than 0.013 mm (0.0005 in.) at any point and shall be maintained within a permissible variation limit of 0.025 mm (0.001 in.). In the spherically seated block, the center of the sphere shall coincide with the bearing face. The movable portion of this block shall be held closely in the spherical seal, but the design shall be such that the bearing face can be rotated freely and tilted through small angles in any direction.

.3 Oven - The oven for the preparation of hot mixtures shall be capable of being set to maintain any desired temperature from room temperature to 163°C (325° F).

2.4 Air Bath - The air bath shall be capable of either manual or automatic control for storing the specimens at 25 plus or minus 0.5° C (77 plus or minus 1.0° F) immediately prior to making the compression test.

2.5 Balance - A balance having a capacity of 2000 g or more and a sensitivity of 0.1 g for weighing the ingredients of the mixture shall be provided.

2.6 Mixing Machine (Fig. 2) - The mechanical mixer consists of a steel bowl having a hemispherical shaped bottom into which a mechanically driven stirring paddle is inserted. The paddle is shaped to fit the bottom of the bowl and is rotated at a speed of 30 r.p.m. Spring steel baffles are also inserted into the bowl to aid in the agitation of the mixture. Proper temperature is maintained during the mixing period by a hot plate under the bottom of the mixing bowl.

2.7 Glass plates for use under the specimens while being cured; 114 mm (4.5 in.) square by 6 mm (0.25 in.) thick. One of these plates shall be kept under each of the specimens during the immersion period and during subsequent handling, except when weighing and testing, in order to prevent breakage or distortion of the specimens.

2.8 Trays for transferring specimens. Stainless steel, perforated, with handle.

2.9 One or more automatically controlled water baths shall be provided for immersing the "B" specimens. The baths shall be of sufficient size to permit total immersion of the test specimens. They shall be so designed and equipped as to permit accurate and uniform control of the immersion temperature within plus or minus 1° C. (1.8° F). They shall be constructed of or lined with copper, stainless steel, or other non-reactive material. The water used for the wet storage of the specimens shall be either distilled or otherwise treated to eliminate electrolytes and the bath shall be emptied, cleaned, and refilled with fresh water for each series of tests.

PREPARATION OF TEST MIXTURES

3.1 In preparing aggregates for making mixtures, a sieve analysis shall be made on each aggregate involved. All coarse aggregates shall be separated individually and recombined in the necessary quantities with the fine aggregates to meet the formula under study.

3.1.1 Obtain test gradation from mix design.

3.1.2 Set up work sheets recording project, contract information and design gradation.

3.1.3 Test specimens will normally be 1800 g per sample. This weight will normally produce a sample of the proper height. The test specimens shall be cylinders 100 mm (4.0 in.) in diameter and 100 ± 2.5 mm (4.0 ± 0.1 in.) in height. It is recognized that the size of test specimens has an influence on the results of the compressive strength test. Therefore; if the known specific gravity or unit weight of the aggregate indicates an excessive variation in height, a correction must be determined. This is accomplished by fabricating an asphalt coated compacted sample and determining the required correction to the batch weights.

3.1.4 Screen and separate aggregate in sizes dictated by the design gradation.

3.1.5 Weigh out samples using the gradation of the worksheet. The number of samples required will be six, when testing HMA.

3.1.6 If lime or liquid antistrip is required, see ODOT TM 316 for procedure.

3.1.7 Place the aggregate samples in an oven controlled to 163 ± 2.8° C (325 ± 5° F) for a minimum of 15 hours.

3.1.8 At the same time place the mixing bowls, stirrers and molds with base plates in an oven controlled to 163 ± 2.8° C (325 ± 5° F).

3.1.9 Asphalt for the batch shall be heated in a separate container to 163 ± 2.8° C (325 ± 5° F). The container shall not come in direct contact with a flame or an unshielded hot plate. The bituminous material shall be stirred constantly while being heated. Any residual amount left over at the end of the day shall be discarded.

3.2.1 Asphalt contents, expressed as percents of the total mix weight, shall be determined such as to provide a range of values covering the extremes employed in laboratory work of creating a pavement design. Normally samples will be fabricated at the high and low extreme and one additional set at the mid-point between the extremes.

3.2.2 Example showing calculation for weight of asphalt at 5.5% of total mix when the oven dry aggregate weight is 1720 g:

$$\frac{\text{(Dry Agg.)(\% Asph.)}}{\text{(\% Dry Agg.)}} = \text{Wt. required}$$

$$\frac{(1720\text{ g})(5.5)}{94.5} = 100\text{ g}$$

Two specimens shall be made at each asphalt content. One series shall be designated as “A” specimens and will be tested for compressive strength. These will serve as control or “dry” specimens. The other series, designated as “B” specimens, will be tested “wet” in accordance with ODOT TM 308.

3.3 An initial batch shall be mixed for the purpose of “buttering” the mixing bowl and stirrers. A discarded recompacted core from the Relative Compaction Test (ODOT TM 310) will be adequate. This batch shall be emptied after mixing and the sides of the bowl and stirrers shall be cleaned of mixture residue by scraping with a small limber spatula but shall not be wiped with cloth or washed clean with solvent, except when a change is to be made in the binder or at the end of a run.

3.4 When the bituminous material has been brought to the desired temperature, the mixing bowl, which shall have been preheated to approximately the temperature of the aggregate, shall be charged with preheated and dry mix aggregate, the preheated bituminous material shall be weighed into the aggregate, and wet mixing shall be started and continued for not less than 2 minutes. While this is suitable for normal non-absorptive aggregates, the more absorptive aggregates will require longer mixing periods.

MOLDING

4.1 Laboratory prepared mixtures shall be allowed to cool to molding temperature as quickly as possible after mixing. Mixtures from field projects shall be brought to molding temperature by careful, uniform heating immediately prior to molding. Molding temperatures shall be the temperature designated as the mix temperature on the mix design. Molding temperature shall be considered the molding temperature when the pressure is first applied. As soon as the materials have been thoroughly mixed and have reached a suitable temperature within the specified range, approximately one-half of the mixture shall be placed in the molding cylinder which has been preheated to the molding temperature. It will be supported by two split plates.

The mixture shall be spaded vigorously twenty-five times with a heated spatula with fifteen of the blows being delivered around the inside of the mold to reduce honeycomb, 150 mm minimum length, and the ten at random over the mixture. The remaining half of the mixture shall then be quickly transferred to the molding cylinder and a similar spading action repeated. The spatula should penetrate the mixture as deeply as possible. The top of the mixture should be slightly rounded or cone-shaped to aid in firm seating of the upper plunger.

Note: Reheated mixtures will show higher compressive strength values than the same mixtures molded promptly after mixing.

4.2 In order to place a leveling preload on the specimen, proceed as follows:

4.2.1 Stack the bottom plunger, initial load support and the mold. Place these on the bottom platen of the compression test machine.(Fig. 2)

4.2.2 Place shims in the upper platen to prevent tilting under load.

4.2.3 Place the upper plunger on the specimen and exert an initial leveling load of 8900 N (2000 lbs) which shall be held for 15-20 seconds, and which will set the mixture against the sides of the mold.

4.3 The compressive load will be placed as follows:

4.3.1 Remove from the stack the initial support plate.

4.3.2 Loosen the set screws holding the mold base plate to permit full double plunger action.

4.3.3 Apply the full molding load of 168 kN (37,800 lbs) or 20,685 kPa (3000 psi) at a rate which will produce a full load in 0.5 minutes. Hold the load an additional 2 minutes to complete the molding.

4.4 Set the combined sample and mold aside to cool (for approximately 2 hours or warm to the touch). After cooling, the specimen shall be ejected from the mold while employing a smooth, uniform rate of travel. For “E” and “F” mixes do not eject the specimens. Cure according to section 5.1 in the molds.

INITIAL CURING

5.1 Place the specimens, which have been ejected from the molds, on glass plates in trays and cure for 20 hours in an oven at 60° C (140° F).

5.2 Cool the specimens, in air at room temperature for a period of 2 hours. Determine the Bulk Specific Gravity according to section 6.1.

BULK SPECIFIC GRAVITY DETERMINATION

6.1 Geometric bulk specific gravity = $\frac{1273.2\ W}{H(D^2)}$

Where:

W = weight in grams of dry specimen in air (to nearest 0.1 g).
H = height of specimen in millimeters (average of four measurements).
D = diameter of specimen in millimeters (average of four measurements).

Explanation of constant in formula:

$$BSG = \frac{\text{Weight (grams)}}{\text{Volume } (cm^3)} = \frac{W}{\frac{\pi(D/10)^2}{4} \times \frac{H}{10}} = 1273.2\ \frac{W}{D^2 H}\ (g/cm^3)$$

The formula may be simplified further when 101.6 mm (4 in.) diameter molds are used.

$$BSG = .1233\ \frac{A}{H} \quad \text{(when D = 101.6 mm)}$$

FINAL CURING

7.0 Divide the six specimens into groups of three, each group having one sample from each asphalt percentage tested. The "A" group will have the lower bulk specific gravity and the "B" group will have the higher bulk specific gravity of the pairs of samples.

7.1 The "A" specimens will be brought to test temperature, 25 ° C (77° F), by storing in the air bath at this temperature for 24 hours before testing. If specimens are to be stored dry for more than 24 hours from completion of oven testing, they shall be protected from exposure to the air by sealing them in closely fitting, airtight containers.

7.2 The "B" specimens will be placed in water bath at 60 ± 1° C (140 ± 1.8° F) for a period of 24 hours.

7.3 After 24 hours, place the "B" specimens in a waterbath at 25 ± 1° C (77 ± 2° F) for 2 hours.

7.4 Be sure to use the appropriate baths marked "lime treated" or "no lime".

COMPRESSION TEST

8.1 After the curing period, test the specimens in axial compression without lateral support at a uniform rate of vertical deformation of 1.3 mm (0.05 in.) per minute per 25 mm of height; which is 5.1 mm (0.2 in.) per minute for specimens 102 mm (4 in.) in height.

REPORT

9.1 The report shall include the following:

9.1.1 The bulk specific gravity of the specimens.

9.1.2 The compressive strength in kilopascals, determined by dividing the maximum vertical load obtained during deformation at the rate specified in Section 8 by the original cross-sectional area of the test specimen.

9.1.3 The nominal height and diameter of the test specimens.

9.1.4 The Index of Retained Strength (IRS) as a ratio of the conditioned compressive strength, divided by the unconditioned compressive strength, all multiplied by 100, to the nearest integer.

1 inch = 2.54 millimeters

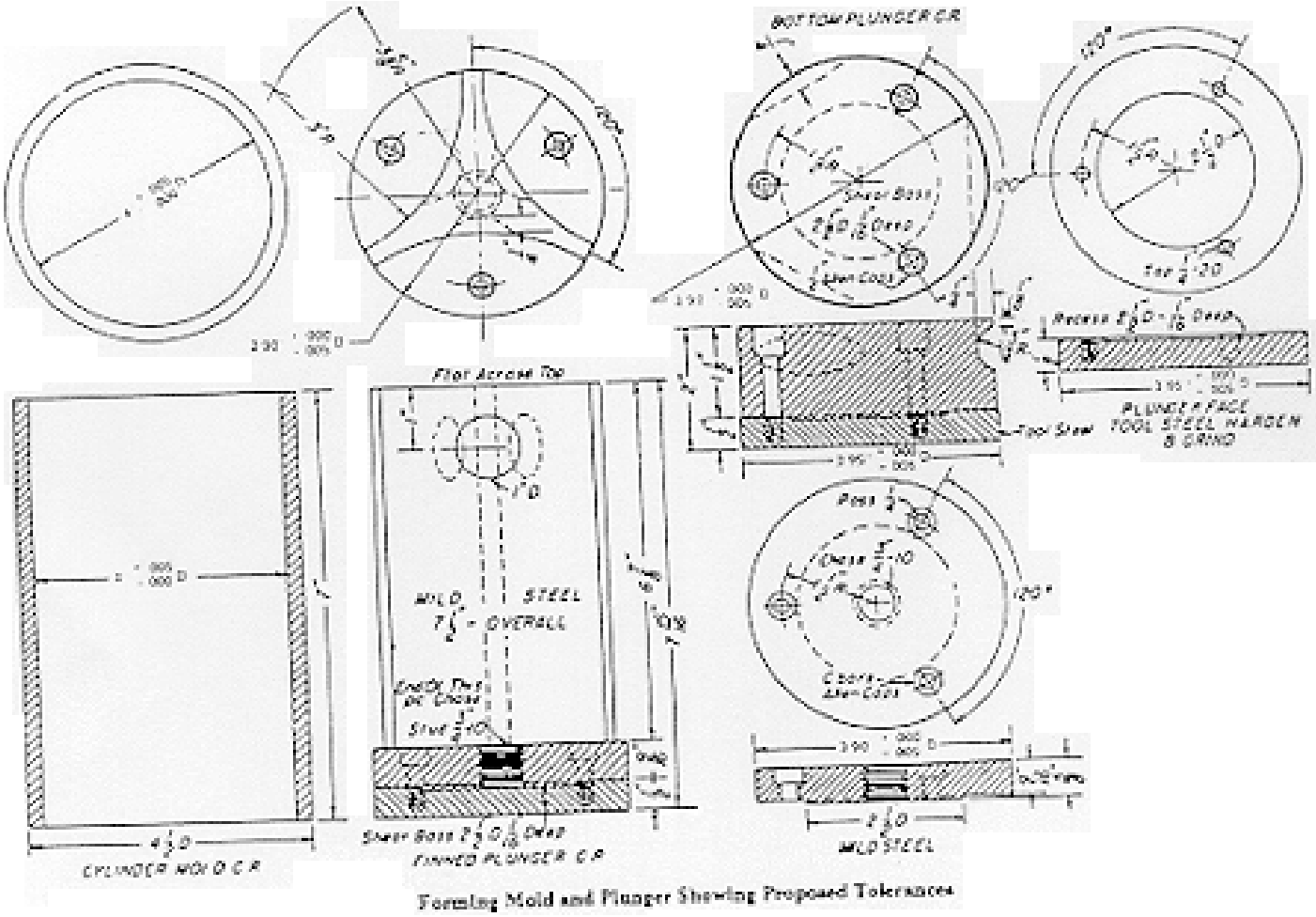

Forming Mold and Plunger Showing Proposed Tolerances

Figure 1

MATERIALS LABORATORY
ODOT Test Method 311-95

Method of Test for
MOISTURE CONTENT OF AGGREGATES

SCOPE

1.1 This test method covers the procedure for determining the moisture content of aggregates used in Base, Cement Treated Base, Asphaltic Concrete and Macadam construction. Samples prepared for other tests shall be dried at the temperature specified for those tests.

SUMMARY

2.1 A representative sample of aggregates is removed from a previously sealed container, weighed and then placed into a drying oven until a constant weight is achieved. The difference between the wet weight and the dry weight is calculated and reported as percent moisture.

APPARATUS

3.1 Balance - A balance having a capacity of 5000 g and accurate to 0.1 g.

3.2 Drying Oven - An oven equipped with a circulating air fan and capable of maintaining a temperature of $110 \pm 5°$ C.

3.3 Containers - Suitable metal sampling containers with moisture tight lids.

SAMPLE

4.1 The sample for moisture determination shall be representative of the material both as to gradation and moisture. The sample must be immediately covered to prevent loss of moisture between the time the sample is taken and when it is initially weighed. Test sample shall weigh not less than the following:

Maximum Designated Particle Size	Minimum Moisture Content Sample
12.7 mm or less	1000 grams
12.7 mm plus	2000 grams

PROCEDURE

5.1 Initial Weight - Obtain the gross weight of sample and metal container.

5.2 Oven Drying - The sample shall be continuously heated at temperature of 110 ± 4° C in a well ventilated oven to a constant weight. While over 90 percent of the moisture loss will occur within 4 to 5 hours, a period 15 to 24 hours will normally be required to obtain a constant weight.

5.3 Dry Weight - After drying, the sample and container shall be immediately weighed.

CALCULATION

6.1 Weight of Moisture - The weight of the dried material and container is subtracted from the weight of the moist material and container to determine the weight of the water lost.

6.2 Weight of Dry Material - The weight of the container is subtracted from the weight of the dried material and container to determine the weight of the dried material.

6.3 Percent Moisture - The weight of the moisture lost is divided by the weight of the dried material, to determine the moisture content. This number multiplied by 100 will give the percent of moisture contained as follows:

Results are to be reported to the nearest 0.1 percent.

$$\text{Moisture content (\%)} = \frac{\text{Weight of Moisture}}{\text{Weight of Dry Material}} \times 100$$

MATERIALS LABORATORY
ODOT Test Method 313-95

Method of Test for
COMPRESSIVE STRENGTH OF EMULSIFIED ASPHALT MIXTURES
(Modified AASHTO Designation T 165 & 167)

SCOPE

1.1 This method of test for compacted Emulsified Asphalt Concrete (EAC) mixtures of the cold-mixed, cold laid type for use in pavement surfaces and base courses is intended to evaluate the asphalt-aggregate compatibility in the mixture. It employs the relative compressive strength of conditioned versus unconditioned test specimens. Mixtures with compatible materials will generally have a compressive strength ratio of 40 or more.

APPARATUS

2.1 Steel compaction mold - 101.6 mm (4.0 in.) inside diameter, 114 mm (4.5 in.) outside diameter and 178 mm (7.0 in.) height.

Mold holder, funnel, plunger and mixing bowls approximately 3 liter capacity.

2.2 Testing Machine - The testing machine may be of any type of sufficient capacity that will provide a range of accurately controllable rates of vertical deformation. Since the rate of vertical deformation for the compression test is specified as 1.3 mm (0.05 in.) per minute per 25 mm (1 in.) of specimen height, and it may be necessary to test specimens ranging in size from 50 x 50 mm (2 x 2 in.) to perhaps 200 x 200 mm (8 x 8 in.), in order to maintain the specified minimum ratio of specimen diameter to particle size, the testing machine should have a range of controlled speeds covering at least 2.5 mm (0.1 in.) per minute for 50 mm (2 in.) specimens to 10 mm (0.4 in.) per minute for 200 mm (8 in.) specimens.

For central control laboratory installations, the testing machine shall conform to the requirements of Section 14 of the Methods of Verification of Testing Machines (AASHTO T 67). The testing machine shall be equipped with two steel bearing blocks with hardened faces, one is spherically seated and the other plain. The spherically seated block shall be mounted to bear on the on the upper surface of the test specimen and the plain block shall rest on the platen of the testing machine to form a seat for the specimen. The bearing faces of the plates shall of the plates shall have a diameter slightly greater than that of the largest specimens to be tested.

The bearing faces, when new, shall not depart from a true plane by more than 0.013 mm (0.0005 in.) at any point and shall be maintained within a permissible variation limit of 0.025 mm (0.001 in). In the spherically seated block, the center of the sphere shall coincide with the bearing face. The movable portion of this block shall be held closely in the spherical seal, but the design shall be such that the bearing face can be rotated freely and tilted through small angles in any direction.

2.3 Air Bath - The air bath shall be capable of either manual or automatic control for storing the specimens at 25 ± 0.5° C (77 ± 1° F) immediately prior to making the compression test.

2.4 Balance - A balance having a capacity of 2000 g or more and a sensitivity of 0.1 g for weighing the ingredients of the mixture shall be provided.

2.5 Glass plates for use under the specimens while being cured; 114 mm (4.5 in.) square by 6 mm (0.25 in.) thick. One of these plates shall be kept under each of the specimens during the immersion period and during subsequent handling, except when weighing and testing, in order to prevent breakage or distortion of the specimens.

2.6 Containers approximately 125 mm (5 in.) by 125 mm (5 in.) by 150 mm (6 in.) high to surround the test specimens in the conditioning bath, described in Section 2.7.

2.7 One or more automatically controlled water baths shall be provided for immersing the "B" specimens. The baths shall be of sufficient size to permit total immersion of the test specimens. They shall be so designed and equipped as to permit accurate and uniform control of the immersion temperature within plus or minus 1° C (1.8° F). They shall be constructed of or lined with copper, stainless steel, or other non-reactive material.

PREPARATION OF TEST MIXTURES

3.1 In preparing aggregates for making mixtures, a sieve analysis shall be made on each aggregate involved. All coarse aggregates shall be separated individually and recombined in the necessary quantities with the fine aggregates to meet the formula under study.

3.1.1 Obtain test gradation from mix design.

3.1.2 Set up worksheets, recording project information and design gradation.

3.1.3 Test specimens will normally be 1700 g per sample. This weight will normally be cylinders 102 mm (4.0 in.) in diameter and 102 ± 2.5 mm (4.0 ± 0.1 in.) in height. It is recognized that the size of test specimens has an influence on the results of the compressive strength test. Therefore, if the known specific gravity or unit weight of the aggregate indicates an excessive variation in height, a correction must be determined. This is accomplished by fabricating an asphalt coated, compacted sample determining the required correction to the batch weights.

3.1.4 Weigh out a minimum of eight samples using the gradation described in Section 3.1.2.

3.2 Emulsion contents, expressed as percents of the total mix weight, shall be determined such as to provide a range of values covering the extremes of the emulsified asphalt specification limit. The emulsion content should be at the two extremes plus two more points between.

Example showing calculation for weight of emulsion at 5.5% of oven dry aggregate when the aggregate weight is 1720 g:

Weight required: $\frac{\text{(Dry Agg.) (\% Asph.)}}{100}$

$$\frac{(1720\text{ g})(5.5)}{100} = 94.6\text{ g}$$

Two specimens shall be made at each emulsion content. These contents shall be at approximately 1% increments. One series shall be designated as "A" specimens and will be tested for compressive strength. These will serve as control or "dry" specimens. The other series, designated as "B" specimens, will be tested "wet" as described in Section 7.

3.3 An initial batch shall be mixed for the purpose of “buttering the mixing bowl.” This batch shall be emptied after mixing and the sides of the bowl shall be cleaned of mixture residue by scraping with a small limber spatula but shall not be wiped with cloth or cleaned with solvent, except when a change is to be made in the binder or at the end of a run.

3.4 Place the aggregate in the mixing bowl. Add clean water to the aggregate in increments of 0.5% of dry aggregate weight. After adding each increment, mix thoroughly by hand. Repeat until the surface of the aggregate is moistened and very little free water is present.

3.5 Add the pre-determined amount of emulsion to the moistened aggregate. Stir 2 to 3 minutes or until complete aggregate coating is achieved. If mix becomes stiff before aggregate is completely coated, terminate the mixing.

3.6 Evenly spread the mixture in a large flat bottomed pan, 50 x 230 x 330 mm (2 x 9 x 13 in.) and cure at room temperature for 24 to 72 hours. Additional curing time will be required if any “unbroken” emulsion remains in the box. Stir the sample after each 24 hour increment of curing.

3.7 When curing is completed, observe and record percent coating.

3.8 Repeat steps 3.4 - 3.7 for each sample required.

MOLDING

4.1 Place approximately one-half of the mixture in the mold. The mixture shall be spaded vigorously twenty-five times with a flat bladed spatula with fifteen blows being delivered around the inside of the mold to reduce honeycomb. The remaining half of the mixture shall then be quickly transferred to the mold and similar spading action repeated. The spatula should penetrate the mixture as deeply as possible. The top of the mixture should be slightly rounded or cone-shaped to aid in firm seating of the upper plunger.

4.2 In order to place a leveling preload on the specimen, proceed as follows:

4.2.1 Place the mold/mold holder assembly with shims in place, on the bottom platen of compression testing machines.

4.2.2 Place shims in the upper platen to prevent tilting under load.

4.2.3 Place the upper plunger on the specimen and exert an initial leveling load of 1034 kPa (150 psi) which shall be held for 15-20 seconds, and which will set the mixture against the sides of the mold.

4.3 The compressive load will be placed as follows:

4.3.1 Remove the shims from the mold/mold holder assembly.

4.3.2 Apply the full molding load of 168 kN (37800 lbs.) or 20,685 kPa (3000 psi) at a rate which will produce full load in 0.5 minutes. Hold the load an additional 2 minutes to complete the molding.

4.4 Set the combined sample and mold aside to cool after which the specimen shall be ejected from the mold while employing a smooth, uniform rate of travel.

INITIAL CURING

5.1 Place the specimens, which have been ejected from the molds, on glass plates in trays and cure for 24 hours in an oven at 60° C (140° F).

5.2 Cool the specimens, in air at room temperature for a period of 2 hours, determine the Bulk Specific Gravity.

BULK SPECIFIC GRAVITY DETERMINATION

6.1 Determine the Bulk Specific Gravity of each specimen by the Geometric Method and calculations as follows:

$$\text{SPECIFIC GRAVITY (GEOMETRIC)} = \frac{1273.0\ W}{H\ (D^2)}$$

Where:
W = dry weight in grams
H = Height of sample in millimeters (average of 4 measurements)
D = Diameter of sample in millimeters (average of 4 measurements)

Explanation of constant in formula:

$$\frac{W\ g}{\frac{\pi\ D\ mm^2}{4} \times H\ mm\ \frac{1\ cm^2}{1000\ mm^3}} \times \frac{1\ cm^3}{g} =$$

$$\frac{W \times 4 \times 1000}{H\ (D^2)\ \pi} = \frac{1273.2\ W}{H\ (D^2)}$$

A simplified version which assumes a nominal 102 mm (4 in.) diameter results in this formula:

$$\frac{0.1233\ W}{H}$$

FINAL CURING

7.1 Divide the “8” specimens into groups “A” & “B”. For each pair of samples at a given emulsion content, assign the sample with higher Bulk Specific Gravity to the “B” group.

7.2 The “A” specimens will be brought to test temperature, 25° C (77° F), by storing in the air bath at this temperature for 24 hours before testing.

7.3 The “B” specimens will be placed in a water bath at 60 ± 1° C (140 ± 1.8° F) for a period of 24 hours.

7.4 After 24 hours of curing, place the “B” specimens in a water bath at 25 ± 1° C (77 ± 2° F) for 2 hours.

7.5 Be sure to use the appropriate water baths marked either “Lime Treated” or “No Lime”.

COMPRESSION TEST

8.1 After all curing and temperature stabilization is complete, test the specimens in axial compression without lateral support at a uniform rate of vertical deformation of 13 mm (0.05 in.) per minute per 25 mm (1 in.) of height (5.1 mm [0.2 in.] per minute for specimens 102 mm (4 in.) in height.)

CALCULATION

9.1 The numerical index of resistance of bituminous mixtures to the detrimental effect of water shall be expressed as the percent of the original strength that is retained after the immersion period. It shall calculated as follows:

$$\text{Index of retained strength} = \frac{S2}{S1} \times 100$$

Where:

S1 = Compressive Strength of dry specimens (“A” specimens) in kPa.
S2 = Compressive Strength of immersed specimens (“B” specimens) in kPa.

REPORT

10.1 The report shall include the following:

10.1.1 The Bulk Specific Gravity of the specimens.

10.1.2 The compressive strength in kilopascals, determined by dividing the maximum vertical load obtained during deformation at the rate specified in Section 8 by the original cross-sectional area of the test specimen.

10.1.3 The nominal height and diameter of the test specimens.

10.1.4 The Index of Retained Strength (IRS) to the nearest integer as calculated in Section 9.1.

MATERIALS LABORATORY
ODOT Test Method 315-95

Method of Test for
EFFECT OF WATER SATURATION AND FREEZE THAW CYCLE ON DENSE-GRADED ASPHALT CONCRETE-- INDEX OF RETAINED RESILIENT MODULUS

SCOPE

1.1 This method is intended to predict loss of resilient modulus and susceptibility to stripping of compacted dense graded asphalt concrete due to field conditions of moisture and freezing. In addition, current and predicted future modulus values are generated for pavement design purposes.

SUMMARY

2.1 One or more fabricated asphalt concrete briquettes are each tested for unconditioned resilient modulus, then for modulus after one water-saturated freeze-thaw cycle.

2.2 Results are Index of Retained Resilient Modulus (IRMr) for the saturated freeze-thaw condition, expressed as a ratio of conditioned to unconditioned modulus, in percent.

APPARATUS

3.1 Apparatus as described in "Apparatus" in AASHTO T 247 for Preparation of Test Specimens of Bituminous Mixtures; including the described California kneading compactor.

3.2 An apparatus for measuring diametral resilient modulus of 102 mm (4 in.) by nominal 64 mm (2.5 in.) asphalt concrete test specimens. This apparatus and procedures used shall be generally similar to those described in ASTM D 4123. A load cell with range including 190 - 2000 N (30-300 lbs.) is recommended to accommodate the expected loads.

3.3 A temperature-controlled air bath capable of achieving and maintaining specimen temperature of 25 ± 1° C (77 ± 1.8 ° F).

3.4 An air-tight watertight vacuum chamber capable of holding the desired number of specimens submerged in water while applying a partial vacuum equivalent to an absolute pressure of 30 mm Hg (1.2 inches Hg).

3.5 A freezer capable of holding sealed specimens at -18 ± 4.4° C (0 ± 8° F).

3.6 A water bath capable of maintaining submerged specimens at 25 ± 1° C (77 ± 1.8° F).

3.7 A water bath (which may be the one used in 3.6 if desired) capable of maintaining submerged specimens at 60 ± 1° C (140 ± 1.8° F).

PREPARATION OF SPECIMENS

4.1 Laboratory-fabricated 102 mm (4 in.) diameter by nominal 64 mm (2.5 in.) tall specimens shall be prepared according to normal ODOT procedures for Hveem stabilometer specimens, as described in AASHTO T 247.

NUMBER OF SPECIMENS

5.1 Normal ODOT procedure for mix design is one test specimen each at the minimum, the maximum and the middle asphalt contents uses tested in the ODOT Hveem-type mix design procedure (total of 3 specimens). This allows a straight-line proration to compute the maximum and the minimum asphalt content required to satisfy ODOT Index of Retained Resilient Modulus (IRMr) specifications. Each specimen is tested non-destructively for both phases of the test: unconditioned modulus and saturated freeze-thaw modulus.

PROCEDURE

6.1 Fabricate 102 mm (4 in.) diameter by nominal 64 mm (2.5 in.) high test briquettes using California kneading compactor, according to AASHTO T 247.

6.2 After cooling briquettes to room temperature, determine bulk specific gravity by AASHTO T 166.

6.3 Place briquettes in a temperature-controlled 25° C air bath for a minimum of 15 hours to stabilize
internal temperature. Measure briquette height to nearest 1 mm.

6.4 Test each briquette for unconditioned resilient modulus at 25° C on 2 perpendicular diametral axes, measuring total horizontal diametral deformation with vertical compressive loading. Use a load pulse of 0.1 second. For each axis, stabilize readings by applying an initial loading sequence of at least 20 load pulses before beginning to record data. Then record 10 sequential load pulses results immediately following the conditioning pulses. The vertical load on the sample must be adjusted to allow the sample to achieve 95 - 105 micro strain. If the 10 readings are not in this range, adjust the load and take 10 additional readings. The average of the 10 sequential load pulse results is a single resilient modulus result for the axis being measured. The average of the 2 results (one result for each axis) is the resilient modulus of the specimen for the given condition (Section 7, Calculations).

6.5 Calculate the volume of voids in the sample based on the Bulk Gravity test from sect. 6.2 and Rice Gravity results on samples with the appropriate asphalts. Calculate the weight of a saturated surface dry sample required to achieve 50 - 80% saturation. An initial target of 60% is recommended.

6.5.1 Vacuum saturate briquettes at a partial vacuum equivalent to an absolute pressure of 30 mmHg, or less, briefly while submerged in room temperature water. Release vacuum, and allow briquettes to rest submerged for 2 to 5 min. Then determine percent saturation. After proper percent saturation is achieved, double wrap each still wet briquette with waterproof material and seal. A second sealed wrapping containing single-sealed briquettes of one mix is considered double wrapping. Place the sealed briquettes in a freezer at 18 ± 4.4° C for 15 hours minimum.

6.6 Remove specimens from freezer, and immediately submerge in 60° C (140° F) water bath with inner seal intact. After a few minutes, remove the thawed inner sealing material and immediately return the briquette to the 60° C bath. Allow total time of 24 hours submerged in 60° C bath.

6.7 Move the briquettes to a 25° C water bath for 3 to 6 hours. If necessary, add cold water to the bath to reduce the temperature to very nearly 25° C soon after briquette submersion in the 25° C bath.

6.8 Retest modulus as in 6.4, substituting the words “water bath“ for “air bath” and the words “freeze thaw” for “unconditioned modulus” as appropriate.

CALCULATIONS

7.1 The resilient modulus of a briquette for a specific condition is the average of the moduli of the two perpendicular axes tested for that condition. Compute the resilient modulus (Mr) for one axes substantially as follows:

$$Mr = \frac{(P)\,(C)}{(\Delta h)\,(t)}$$

where: P = applied load, Newtons. If not held constant during the 10 recorded load pulses, this is the average of the 10 applied loads on the given axes.

C = a constant; ODOT uses 618,300 micro-mm per mm, which is supplied by Oregon State University as appropriate for our current modulus apparatus and typical dense graded mixes. A similar value is obtained from several publications by summing recommended Poisson’s ratio of 0.35 with derived diametral loading constants of approximately 0.27, with an included conversion for micro-mm: typical
$C = (0.35 + 0.27)(1\text{x}10^6 \text{ micro-mm/mm})$
$= 620{,}000$ micro-mm/mm.

Δh = total horizontal (diametral) deformation, in micro-mm, This is the average of the 10 deformations during the 10 recorded load pulses on one axis.

t = specimen thickness (height normal to briquette ends), in mm, to the nearest 1 mm - typically 64 mm

Mr = resilient modulus, in kPa

7.2 Compute the index of Retained Resilient Modulus (IRMr) as the ratio of the freeze-thaw modulus of a briquette, expressed in percent:

$$IRMr = \frac{FrThMr}{UncondMr} \times 100\%$$

7.3 IRMr shall be recorded to the nearest percent, for example: 87%.

7.4 Using the straight-line proration between asphalts tested, compute the asphalt content at which the prorated IRMr will meet or exceed the minimum IRMr specified by ODOT. Increments of asphalt shall be computed to one tenth of one percent of total mix weight, for example: 5.7 percent asphalt cement content.

REPORT

8.1 The report shall include all data necessary to fully identify the mix tested and proposed use of mix.

.

8.2 The report shall also include the individual resilient modulus results for the two conditions for each briquette, and the asphalt content at which the IRMr meets ODOT minimum specifications. If all minimum specifications. If all asphalt contents tested for IRMr meet or exceed the required minimum value, report the lowest asphalt content as meeting the minimum specifications.

MATERIALS LABORATORY
ODOT Test Method 316-98

Method of Test for
ADDING ANTI-STRIP ADDITIVES OR LIME TO MIX DESIGN SAMPLES

SCOPE

1.1 This method describes the procedure for incorporating lime and/or liquid anti-strip additives into bituminous mix design samples in the laboratory. The method described are intended to simulate the incorporation of additives into mix in the field.

APPARATUS

2.1 An electronic balance with a capacity of at least 1200 g and sensitive and accurate to 0.1 g.

2.2 Pans, bowls, cans, stirring implements, brushes and other miscellaneous equipment.

2.3 Heating oven capable of maintaining a constant temperature in the 60° to 180° C range.

ADDING LIME TO THE SAMPLES

3.1 Lime should not be added to the samples until the night before the samples will be mixed with asphalt.

3.2 After batching out aggregate test samples to the proper test size, add the correct weight of dry lime to the aggregate samples. The correct portion of lime should already have been stored in a closed tin and placed with the aggregate sample.

3.3 Using a spoon or spatula, thoroughly stir the lime into the dry aggregate sample.

3.4 Add sufficient water to just submerge all the aggregate.

3.5 Stir the lime, aggregate and water thoroughly. This should take about five minutes per sample. All the described operations should be done in the container that will go into the oven overnight. Transferring material to different containers may result in a loss of fine material.

3.6 Do everything possible to retain all fine material. Spatulas and brushes may be needed to clean the fine material from the implements.

3.7 Place the wetted sample of aggregate and lime into the drying oven overnight. Set the oven to the temperature at which the aggregate will be held for mixing.

3.8 Proceed with mixing the next day in the normal manner.

ADDING LIQUID ANTI-STRIP ADDITIVES TO MIX DESIGN SAMPLES

4.1 Heat sufficient quantities of neat asphalt to make all samples necessary. Samples should be heated to approximately mixing temperatures. This should be done by the procedures normally used for mix preparation.

4.2 Heat anti-strip sample to between 45° and 60° C. Read the manufacturer's literature to make sure these temperatures are appropriate.

4.3 Obtain a clean mixing/pouring can to combine asphalt and additive into. Tare this can and weigh into it sufficient asphalt to mix test samples.

4.4 Calculate the proper amount of liquid anti-strip to be added. Example:

0.25% anti-strip x 850 g of asphalt = 2.1 g anti-strip

(The percentage of anti-strip is based on the neat asphalt weight alone.)

4.5 Weigh the anti-strip additive into the mix/pour can to the nearest 0.1 g. Be very cautious with this addition because once it's poured in it is part of the sample.

It is helpful to use a small spoon or stirring rod to introduce the anti-strip into the mix/pour can.

4.6 Stir the combined sample thoroughly and replace it in the heating oven until proper mix temperature is reestablished. Be sure to keep the treated sample covered loosely in the oven. If it is uncovered, the volatile additive will escape. If it is covered tightly, the contents may erupt when opened and spill out.

4.7 Each time, before weighing the treated asphalt into a mix sample, stir thoroughly again. This is very important.

4.8 If you run out of asphalt, repeat the process to treat a new sample asphalt.

MATERIALS LABORATORY
ODOT Test Method 317-95

Method of Test for
MOISTURE CONTENT OF BITUMINOUS MIXTURES

GENERAL NOTES

1.1 Sample sizes and drying methods will be those specified for the individual test procedures being run, or as noted herein. (Table 1)

1.2 Whichever drying method is used, calculate the percent moisture using the formula:

$$\text{Percent Moisture} = \frac{\text{wet weight - dry weight}}{\text{dry weight}} \times 100$$

APPARATUS

2.1 Scale accurate to 0.2 g.

2.2 Containers of sufficient capacity to hold entire sample without spilling.

2.3 Microwave safe containers.

2.4 Thermometer, reads to 200° C accurate to ± 2° C.

2.5 Forced air oven (Gilson BO 350 or equivalent).

2.6 Microwave oven (600 watts minimum).

2.7 Conventional lab oven.

2.8 Utensils such as spoons, hot pads, gloves, etc.

PROCEDURE (Forced Air Oven)

3.1 Spread the sample of the material in a tared container and record the total weight.

Note: When testing asphalt concrete, line the bottom of the container with paper.

3.2 Dry the material to constant weight in the oven at 171 ± 6° C (340 ± 10° F) (approximately 90 minutes). Constant weight is considered to be less than 1 g or 0.1 % of total weight lost after a heating period.

3.3 Record the dry weight. Calculate the moisture content according to Section 1.2.

PROCEDURE (Microwave oven)

4.1 Place the sample (Size per Table 1) of the material in tared container, heaped to form a large mass in the center. Record the weight.

Note: When testing asphalt concrete, line the bottom of the container with paper.

4.2 Set the power setting on the oven to a position that will heat the sample to 171 ± 6° C as soon as possible. This setting will normally be on high.

4.3 When the sample reaches 171° C, reset the oven to hold this temperature.

4.4 After 10 minutes at this temperature, remove the sample, weigh and record.

4.5 Place the sample back in the oven for another 10 minutes, being sure to hold the temperature noted in 4.2.

4.6 Remove the sample and record.

4.7 Continue the process noted in 4.5 and 4.6 until there is no loss in weight (see Section 3.2). Calculate the percent moisture using the formula given in Section 1.2.

PROCEDURE (Conventional Oven)

5.1 Place the sample of the material into a tared container and record the weight.

5.2 Dry the material to constant weight in the oven at 110 ± 5° C (approximately 24 hours).

5.3 Record the dry weight. Calculate the moisture content according to Section 1.2.

TABLE 1

Maximum Particle Size	Minimum Moisture Content Sample
25 mm or less	1000 ± 100 g
over 25 mm	2000 ± 200 g

MATERIALS LABORATORY
ODOT Test Method 318-95

Method of test for
SELECTION OF ASPHALT CONTENT IN OPEN-GRADED BITUMINOUS MIXES BY THE DRAINDOWN AND ECS PROCEDURE

SCOPE

1.1 Open graded wearing courses are designed to be free draining, rut and wear resistant structural sections. They typically have 15-20 % voids in place. Since the predominant failure mode is ravelling, the goal of the design is to get thick films of asphalt on the aggregate and verify compatibility of the asphalt and aggregate.

APPARATUS

2.1 Six 200 x 200 x 50 mm pyrex baking dishes.

2.2 Oven capable of holding three dishes from 2.1 and holding in the range of 150°- 200°C ± 2° C.

2.3 A square frame of flat material 200 x 200 mm with a square 150 x 150 mm opening in its center. White cardboard works well.

SAMPLE PREPARATION

3.1 Determine target gradation from process control data just like any hot mix design.

3.2 Batch out four 1800 g samples for Environmental Conditioning System (ECS). This sample weight may need to be adjusted based on aggregate specific gravity. Try to achieve 102 ± 0.5 mm (4.0 ± 0.2 in.). Batch out three 1000 g samples for the draindown test.

3.3 Mix the draindown samples first according to AASHTO T 167, but do not compact. Attempt to cover all surface asphalt conditions from dry to thick with the three samples. Samples should be in 1% asphalt content increments. If unsure where to start, start at 5.5 % asphalt. A typical set of samples would be at 4.5, 5.5, and 6.5 % Asphalt.

DRAINDOWN PROCEDURE

4.1 After mixing each draindown sample, place it uniformly in the bottom of an 200 x 200 x 50 mm pyrex baking dish. Clear pyrex is best, blue tinted is acceptable, but amber pyrex makes visual evaluation difficult.

4.2 After all the draindown samples are placed in pyrex dishes, put them in an oven at 163° C for one hour. After one hour, remove dishes from the oven and allow to cool.

4.3 After samples are cool, invert the dishes over a white towel or white piece of paper.

4.4 Place the 200 mm square frame over the bottom of the dishes to minimize poor interpretation of the asphalt coverage in the corners.

4.5 Compare the percent of the dish bottom covered with asphalt to the standard photos and determine “percent draindown”.

4.6 Record a percentage draindown for each sample.

4.7 Select a recommended asphalt content between 70% and 90% draindown with a minimum ECS test result of 80.

If unsure what percentage to select between 60% and 90%, examine the surface of the mix. Select a percentage slightly below where the asphalt is observed to be pooling on large flat surfaces or depressions of the aggregate. Large areas of thick shiny asphalt on the aggregate may indicate excess asphalt during construction which will draindown in transport. If all other criteria are met, select an asphalt content which results in 75% draindown.

4.8 Perform a Rice Gravity Test (ODOT TM 306) on all draindown samples.

ECS PROCEDURE

5.1 After mixing the draindown samples, mix and compact four ECS samples by AASHTO T 167. All four samples should be mixed at the asphalt content selected in the draindown samples.

5.2 Have the ECS samples tested by Oregon State University according to SHRP protocol TP 34.

5.3 Mix and compact one additional sample by AASHTO T 167 with an asphalt content about 0.5% different than the ECS samples. This sample is used to interpolate void contents.

5.4 Estimate void content from the geometrics and weight of the ECS samples combined with the Rice Gravity from Section 4.8.

REPORTING

6.1 Report all test data and include recommended gradation and asphalt content on the open-graded mix design report form.

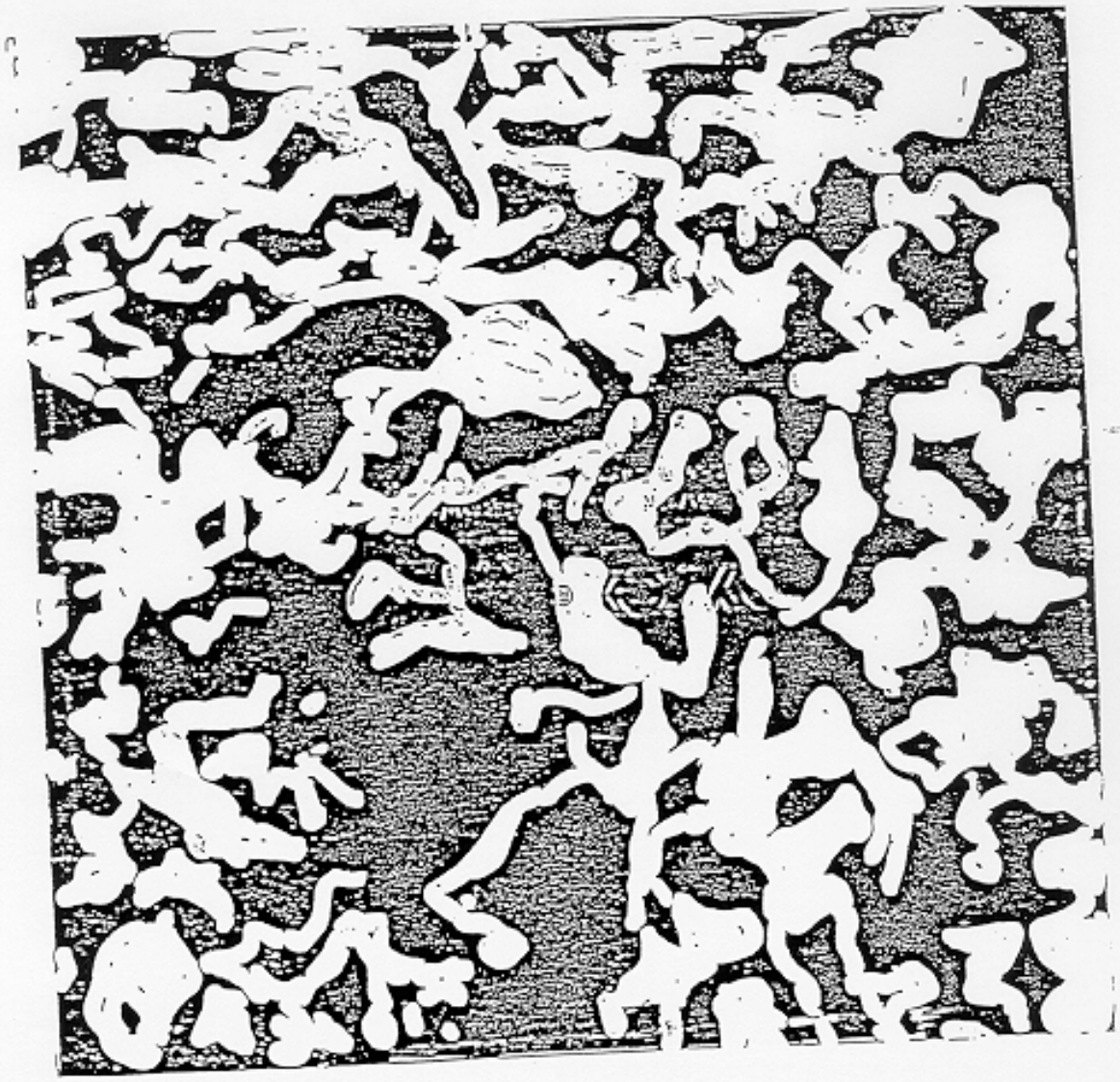

60 %

70%

80%

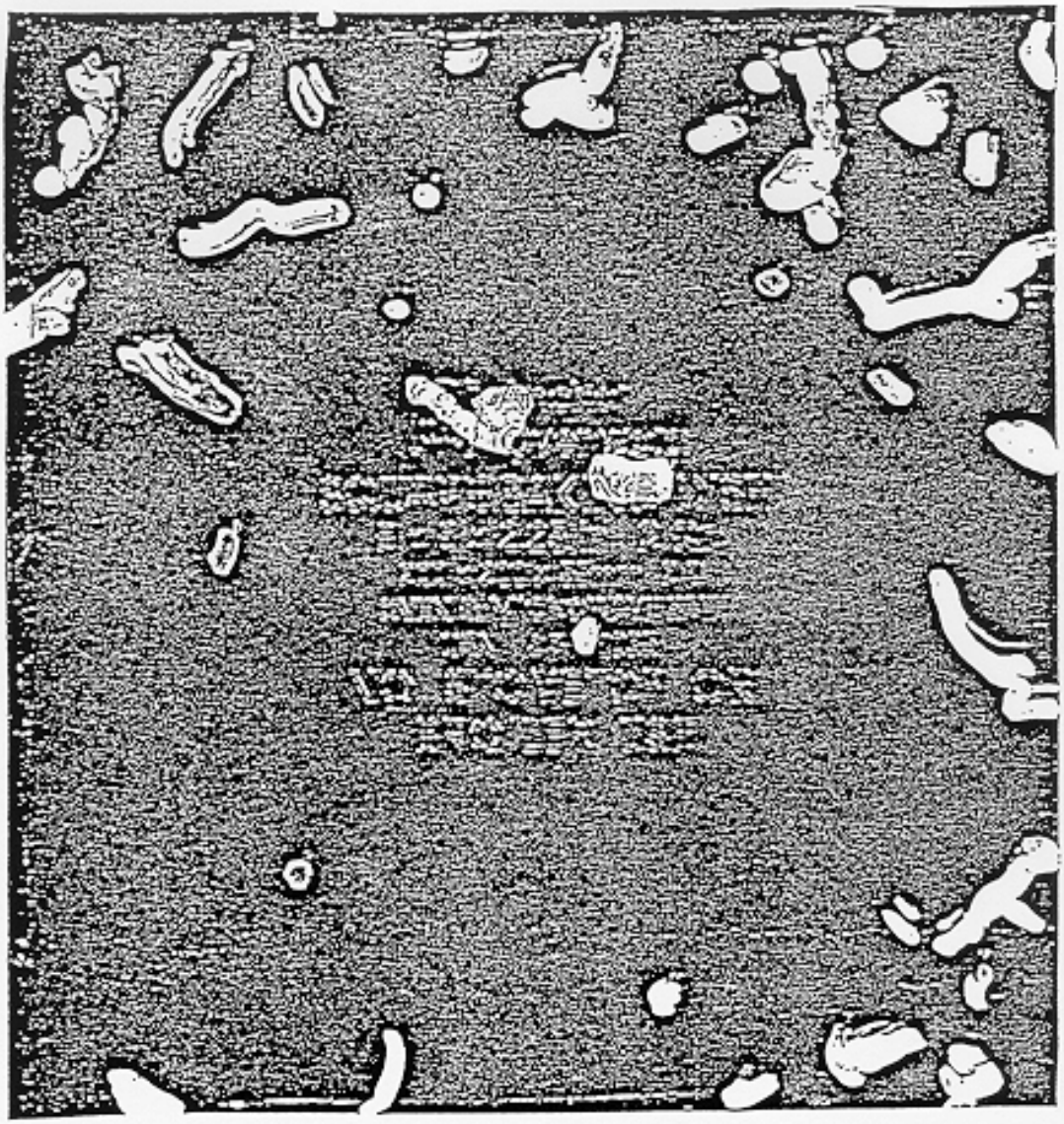

ODOT TM 335

PRESENCE OF HARMFUL MATERIALS IN RECYCLED ASPHALT SHINGLES

1. Scope.

This method covers the procedure to be used for the determination of harmful materials (e.g. nails, glass, rubber, soil, brick, tars, paper, plastic, wood chips, metal flashing, and other material not used in the manufacturing of asphalt shingles) in a sample of recycled asphalt shingles (RAS).

2. Apparatus

2.1. Balance or scale accurate to within 0.1 percent of the sample mass or readable to 0.1 g and meeting the requirements of AASHTO M 231.
2.2. Forced draft (preferred), ventilated or convection oven
2.3. Magnet rated with a minimum rating of 10 lbs of pull.

3. Sample Preparation

3.1. Sample per AASHTO T 2
3.2. Reduce to testing size per AASHTO T 248.
3.3. The minimum mass shall conform to Table 1 of AASHTO T 27/11.

4. Procedure - General.

4.1. Prepare a companion moisture sample and dry the sample following AASHTO T 255/T 265, Directions for Drying Aggregate, under the Controlled section.

4.2. Determine and record the wet mass of the entire test sample to the nearest 0.1 gram, designate as W_{wt} for calculation in 5.1.

4.3. Spread the sample to a depth of a ½-inch or less on a clean non-magnetic surface.

4.4. Pass the magnet over the entire sample between 1/8 and ½ inch above the sample.

4.5. Determine and record the weight of the remaining sample not retained by the magnet. Designate as “A” for calculation in 5.1.

4.6. Calculate the weight of the metal fragments according to section 5.1.

4.7. Sieve the remaining material over the 3/8 inch, the No. 4, the No. 8, and the No. 30 sieves. Sieve the material for 10 ±2 min.

4.8. Discard the portion of material passing the No. 30 sieve.

4.9. Check the material retained on each sieve for all deleterious content including but not limited to wood, paper, plastic and other material not used in the manufacturing of asphalt shingles:

4.9.1. Spread the portion of the sample retained on each sieve individually, out in a pan large enough to examine the individual particles carefully.

4.9.2. Separate and remove the deleterious matter from the sample by visual inspection.

4.9.3. Weigh all deleterious matter removed from the RAS sample retained on each sieve to the nearest 0.1 g and record each weight as $N_{3/8}$, N_4, N_8, and N_{30} respectively for use in calculation in Section 5.2.

5. Calculations

5.1. Calculate total dry weight of sample, W_t as follows:

$$W_t = W_{wt} - \left(W_{wt} \times \frac{M_i - M_f}{M_f} \right)$$

Where:

M_i = initial weight of companion moisture sample, g
M_f = final weight of companion moisture sample, g
W_{wt} = total weight of wet sample, g

5.2. Calculate the weight of metal fragments to the nearest 0.1 grams as follows:

$$M = W_T - A$$

Where:

M = weight of material retained by the magnet, g
W_T = total dry weight of sample, g
A = weight of material not retained by the magnet, g

5.3. Calculate the percent by weight of deleterious material in the sample:

$$P = \frac{M + N_{3/8} + N_4 + N_8 + N_{30}}{W_T} x100$$

Where:

P = percent of deleterious matter by weight
M = weight of material retained by magnet, g

$N_{3/8}$ = weight of deleterious substance retained on the 3/8 inch sieve, g
N_4 = weight of deleterious substance retained on the No. 4 sieve, g
N_8 = weight of deleterious substance retained on the No. 8 sieve, g
N_{30} = weight of deleterious substance retained on the No. 30 sieve, g
W_T = total dry weight of sample, g

6. Report

6.1. Mass of sample
6.2. Mass harmful material
6.3. Percentage of harmful materials (0.1%)

PETROLEUM

SECTION 400

PETROLEUM - ODOT TEST METHODS
WITH AASHTO, ASTM AND MFTP TEST REFERENCES

Description of Test	ODOT	AASHTO	ASTM	MFTP
Penetration of Bituminous Materials	TM 401	T 49		
Kinematic Viscosity of Asphalts (Bitumens)	TM 402	T 201		
Flash and Fire Points by Cleveland Open Cup	TM 404	T 48		
Ductility of Bituminous Materials	TM 407	T 51		
Solubility of Bituminous Materials	TM 409	T 44		
Testing Emulsified Asphalts	TM 411	T 59		
Softening Point of Bitumen (Ring-and-Ball Apparatus)	TM 412	T 53		
Loss on Heating of Oil and Asphaltic Compounds	TM 413		D 6	
Absolute Viscosity of Asphalts	TM 417	T 202		
Effect of Heat and Air on a Moving Film of Asphalt Binder (Rolling Tin-Film Oven Test)	TM 418	T 240		
C- Value Procedures	TM 425			
Vialit test for Aggregate Retention in Chip Seals “French Chip”	TM 426			
Torsional Recovery	TM 428			
Elastic Recovery	TM 429			
Absolute Viscosity	TM 430			
Bond Strength of Flexible Bituminous Adhesive	TM 432			

MATERIALS LABORATORY
ODOT Test Method 425-95

Method of Test for
C - VALUE PROCEDURES

SCOPE

1.1 This procedure describes the method for comparing the change in viscosity that occurs to an asphalt in a paving plant operation to the lab aging of the same asphalt in the rolling thin-film oven.

SUMMARY OF METHOD

2.1 Asphalt is extracted and recovered from a bituminous mix sample taken from the road at the time of placement or from the discharge of the plant as per the specifications. The absolute viscosity of the recovered asphalt is compared to the viscosity values obtained for the unaged and lab aged original asphalt used in the mix to determine the "C" value. The "C" value is a comparison of the change in viscosity taking place in an asphalt paving plant to the change in viscosity that occurs to the same asphalt in a rolling thin-film oven.

DEFINITIONS

3.1 Definitions are included in the specific test methods referred to herein.

APPARATUS

4.1 See ODOT TM 314, TM 417 and TM 418.

REAGENTS

5.1 See ODOT TM 314, TM 417 and TM 418.

PROCEDURE

6.1 Sampling - An approximate 8000 g random sample of the bituminous mixture and a one quart container of asphalt will be submitted for testing per the specifications for each sublot tested. The bituminous mixture sample will be split into two subsamples. For sampling procedure and frequency see ODOT supplemental Standard Specifications Section 403 and the ODOT Construction Manual. One subsample will be tested initially as indicated in Sections 6.2 and 6.3 below. The other subsample will be retained for future testing if necessary.

6.2 For the procedure used in recovering the asphalt from the bituminous mixture subsample see ODOT TM 314.

6.3 After completion of ODOT TM 314, the recovered asphalt will be tested for:

(a) absolute viscosity (AASHTO T 202)

The remaining residue after all testing is completed may be saved for possible future chemical analysis.

6.4 The original asphalt will be tested as follows:

(a) The unaged original asphalt will be tested for:

(1) absolute viscosity (AASHTO T 202)

(2) effect of heat and air on moving film of asphalt, rolling thin-film oven test (AASHTO T 240)

(b) The aged residue resulting from the rolling thin-film oven test will be tested for absolute viscosity (AASHTO T 202)

CALCULATIONS

7.1 The "C" value for each subsample will be calculated using the following equation:

$$\text{“C” value} = \frac{R-A}{B-A} \times 100$$

Where:

A = absolute viscosity of original asphalt used in the production of the mixture from 6.4(a)(1)
B = absolute viscosity of the rolling thin-film oven residue of the asphalt used in the production of the mixture from 6.4(b)
R = absolute viscosity of the asphalt recovered from the mixture from 6.3(a)

REPORTING

8.1 If the "C" value for the initial subsample is equal to or greater than 30, the aging of the asphalt is considered to be acceptable. This "C" value will constitute the sample "C" value. No further testing of the backup subsample will be required. The backup subsample will be retained until the project "C" value has been determined.

8.2 If the "C" value for the initial subsample is less than 30, the backup subsample of bituminous mixture shall be immediately tested in accordance with Sections 6.2 and 6.3 of this procedure. The backup "C" value will be calculated using the R value from the backup sample and the A and B values from the previously tested original asphalt for the initial subsample.

8.2.1 If the algebraic difference between the initial “C” value and the backup “C” value is 15 or less, the average of the initial and backup “C” values will constitute the sample “C” value.

8.2.2 If the algebraic difference between the initial “C” value and backup “C” value is greater than 15, the higher value will constitute the sample “C” value.

8.2.3 If the sample “C” value is less than 30, the Project Manager and Roadway Materials Engineer shall be immediately informed by phone or MS-Mail.

8.2.4 If the algebraic difference between the initial "C" value and backup "C" value is 15 or less, the 15 or less, the average of the initial and backup "C" values will constitute the sample "C" value.

8.2.5 If the algebraic difference between the initial "C" value and backup "C" value is greater than 15, the higher value will constitute the sample "C" value.

8.2.6 If the sample "C" value is less than 30, the Project Manager and Roadway Materials Engineer shall be immediately informed by phone or E-Mail.

MATERIALS LABORATORY
ODOT Test Method 426-98

Method of Test for
VIALIT TEST FOR AGGREGATE RETENTION IN CHIP SEALS "FRENCH CHIP"

SCOPE

1.1 This method is an indicator of aggregate retention for chip seals.

SUMMARY OF METHOD

2.1 Asphalt emulsion or hot asphalt cement is applied to standard size stainless-steel pans. Exactly one hundred graded aggregates are embedded in the binder. The material is allowed to cure under specified conditions. Following this cure, the trays are conditioned at -22° C for 30 minutes. Then a 500 g ball is dropped 3 times from a distance of 50 cm onto the inverted trays. The results are recorded as percent aggregate retention.

APPARATUS

3.1 Vialit Stand - See attached drawing

3.2 Pans - the pans are constructed of 304 stainless-steel 2 mm thick. The pans shall be 20 X 20 cm with a lip around the entire edge. The lip shall be high enough to prevent the emulsion or cement from over flowing, and no higher than 758 of the smallest aggregate sieve size.

3.3 Compaction roller - see attached drawing. The roller shall be filled to a weight of 25 Kg.

3.4 Ball - the ball shall be stainless-steel and weigh 500 ± 5 g.

3.5 Oven - the oven shall be a forced recirculating oven capable of regulating temperature within ± 2° C.

3.6 Freezer - for test below 0° C, a freezer capable of regulating temperature within ± 1.5° C is required.

PREPARATION OF TEST SPECIMENS

4.1 One hundred 6.3 – 9.5 mm reference aggregates are washed. The reference aggregates shall be dried at 50° C for 24 hours.

4.2 79g asphalt cement emulsion is poured onto the clean and dry plate. The plate shall be tilted back and forth to give a uniform thickness. Place the plate in a horizontal position. Place stones uniformly using a 10 X 10 matrix spacing technique (10 rows and 10 columns).

CURE OF SPECIMENS

5.1 The standard cure is to place the pan in the oven for 48 hours at 60° C.

SAMPLE CONDITIONING

6.1 The pan is removed from the oven, and allowed to cool for 30 minutes at 25 ± 5° C. The pan is then placed in a freezer at the specified temperature for 30 minutes. Sample conditioning is then completed.

TEST PROCEDURE

7.1 Remove the pan from the freezer and place it in an inverted position in the test apparatus. Place the ball in the V-holder and let it free-fall. Repeat the procedure until the ball has been dropped a total of three times. The entire sequence must be completed in 10 seconds for the test to be valid.

7.2 Flip the pan over and count the stones attached. Report the number attached as percent aggregate retention.

ODOT TM 426-98

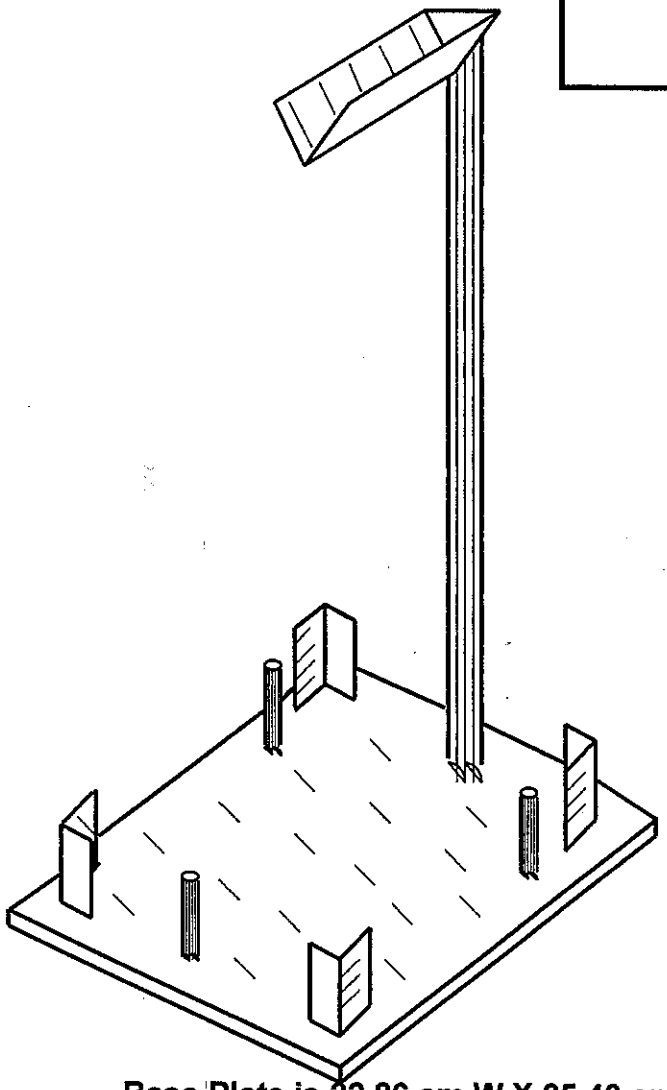

Ball is 5.08cm Dia. 500 ± 5 g
Material: Stainless Steel Impact

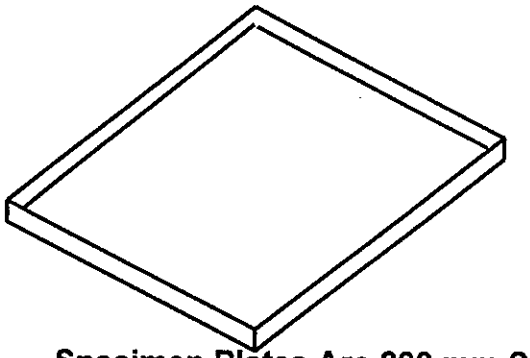

Base Plate is 22.86 cm W X 25.40 cm D
Material: .9525 cm Hot Rolled Steel

Support Rod is 1 .905 cm Dia. X 60.96 cm L
Material: 304 Stainless Steel

Specimen Plates Are 200 mm Sq.
Material: .635 cm Hot Rolled Steel

.635cm Sq. Edge Welded All Around
Material: 1018 Cold Rolled Steel

Finish: Bead Blast Both Sides

MATERIALS LABORATORY
ODOT Test Method 428-02

Method of Test for
TORSIONAL RECOVERY

SCOPE

1.1 This method of test is an indication of the amount of elasticity that a polymer has imparted to an asphalt used in an emulsion. This elasticity is a rough indicator of the percent polymer that has been added to the asphalt.

APPARATUS

2.1 Container - The container in which the sample is to be tested shall be a flat-bottom, cylindrical seamless tin box, 55 mm in diameter and 35 mm in depth. The container is commonly known as a three ounce ointment tin.

2.2 Disc Assembly - The disc assembly is shown in Figure 1. The disc shall be made of aluminum. The spider, pointer and nut shall be made out of steel.

2.3 Wrench - A 8 mm (5/16) inch open-end or box-end wrench.

2.4 Timer - A stopwatch, clock or other timing device graduated in divisions of one second or less.

PROCEDURE

3.1 Use either distillation or evaporation methods, as required by specification, to obtain asphalt content. After running the penetration test, reheat the tin and pour the hot residue into three - 3 ounce tins, weighing 60 +/- 2g per tin.

3.2 Immerse the disc assembly into the molten asphalt; align the notches in the spider with the can so that the disc is centered, and adjust the disc height such that the asphalt surface is even with top of the disc. Put the can and assembly back in the 135° C oven to allow bubbles to escape and to break the surface tension around the disc. Prepare the next two assemblies similarly. After ten minutes in the oven, remove the cans and allow them to cool at room temperature for two hours.

3.3 Mark the tin for the reference points of 0° and 180° with the pointer location after mold preparation at 0°. Hold the tin and spider rigidly. With a wrench attached to the top of the disc shaft, rotate the disc 180° and release immediately. Begin timing the recovery at the release of the disc. The rotation should be done at a steady rate taking approximately five seconds to accomplish. After 30 seconds note the pointer location in degrees (A). Repeat the procedure for the second and third samples.

CALCULATIONS AND REPORT

METHOD A: “CALTRANS METHOD”

4.1 Calculate the percent recovery as follows:

$$\text{Percent Recovery} = 100 \times \frac{(A - B)}{180}$$

Where:

A = the pointer location at 30 seconds in degrees
B = the pointer location at 30 minutes in degrees

4.2 Report the percent recovery as an average of the three results.

METHOD B: "CHEVRON METHOD"

5.1. Calculate the percent recovery as follows:

$$\text{Percent Recovery} = 100 \times \frac{(180 - B)}{180}$$

Where:

B = the pointer location at 30 minutes in degrees

5.2 Report the percent recovery as an average of the three results.

FIGURE 1
APPARATUS FOR RECOVERY TEST

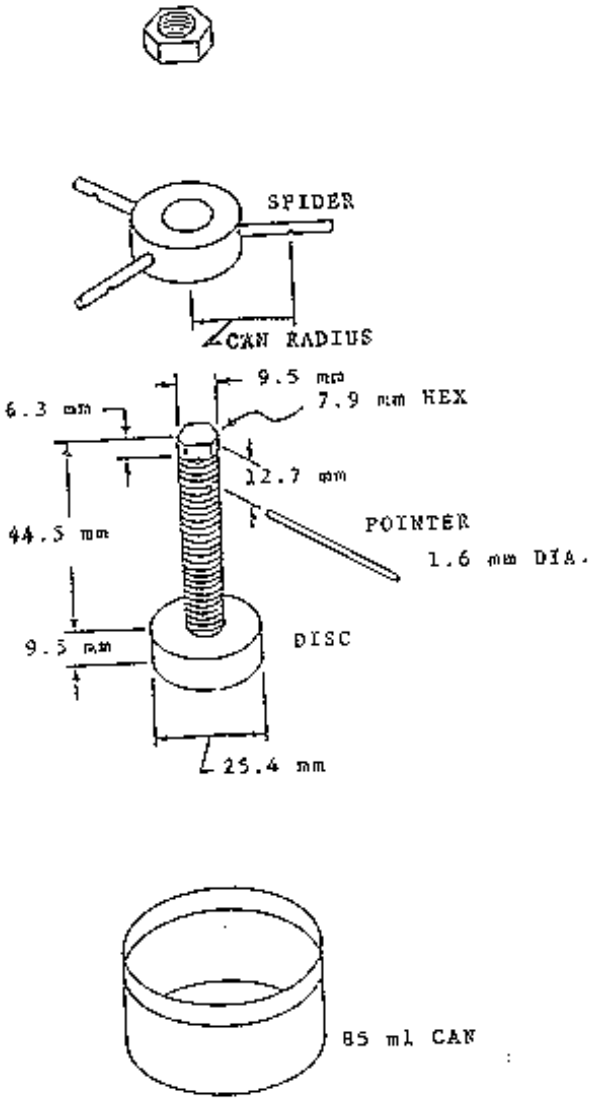

MATERIALS LABORATORY
ODOT Test Method 429-95

Method of Test for
ELASTIC RECOVERY

PURPOSE

1.1 The elastic recovery is a measure of material's ability to recover after elongation, or to resist permanent deformation.

APPARATUS

2.1 Ductilometer meeting AASHTO T 51.

2.2 3 Mold assemblies: base plate, end, and standard size pieces meeting AASHTO T 51.

2.3 Release agent for mold pieces as required by AASHTO T 51.

2.4 Scraper Knife (putty knife).

2.5 Thermometer.

2.6 A pair of scissors.

PROCEDURE

3.1 Regulate the ductilometer to the test temperature of 10° C (50° F). Make sure the pointer is on zero.

3.2 Coat the base plate and insides and tops of the side pieces with release agent. Assemble the mold end pieces and side pieces on the base plate.

3.3 Prepare the sample by carefully heating until it is fluid enough to pour.

3.4 Stir the sample well.

3.5 Pour the material into the molds in a thin stream, back and forth until the molds are slightly over-filled.

3.6 Cool the molds 30 to 40 minutes.

3.7 Place the molds in the ductilometer bath (at the specified temperature).

3.8 After 30 minutes slice off the excess bitumen with the heated putty knife. Replace the samples in the bath.

3.9 After 85 to 90 minutes, remove the samples from the base plate, remove the side pieces, and attach the clips to the pins in the ductilometer.

3.10 Turn on the motor, engage the screw, and pull the samples at a speed of 5 cm per minute just until the pointer reaches 20 cm, then stop the motor, and immediately start the timer.

3.11 Hold the stretched sample at 20 cm for exactly 5 minutes.

3.12 With a pair of scissors, cut the samples in the middle, and restart the timer.

3.13 At the end of 60 minutes, slide the shelf back so that the two ends of the cut sample just meet. Record the elongation in cm at the pointer.

CALCULATION

$$\% \text{ Elastic Recovery} = \frac{(20 - x)}{(20)} \times 100$$

Where 'x' is the elongation recorded in Section 2.13 above.

MATERIALS LABORATORY
ODOT TEST METHOD 430-95

Method of Test for
ABSOLUTE VISCOSITY

SCOPE

1.1 This test method covers procedures for the determination of viscosity of asphalt (bitumen) by vacuum capillary viscometer at 60°C (140°F).

NOTE 1--This test method is intended to follow the methods established by the Pacific Coast Conference on Asphalt Specifications, Paving Asphalt Committee for PBA 3, 5 and 6 materials. It is comprised of the test procedures from ASTM P 159 (Vol. 4.03, 1985), the Asphalt Institute apillary viscometer from ASTM D 2171 and the calculation method for determining the viscosity at $1s^{-1}$ from ASTM D 4957.

REFERENCE DOCUMENTS

2.1 ASTM Standards:
D 2171 Standard Test Method for Viscosity of Asphalts by Vacuum Capillary Viscometer
E 1 Specification for ASTM Thermometers
E 77 Method for Verification and Calibration of Liquid-In-Glass Thermometers

SUMMARY OF TEST METHOD

3.1 The time is measured for a fixed volume of the liquid to be drawn up through a capillary tube by means of vacuum, under closely controlled conditions of vacuum and temperature. The viscosity in poises units, is calculated by multiplying the flow time in seconds by the viscometer timing one calibration factor. The apparent viscosity is determined at a shear rate of one reciprocal second (see Figure 1). A computer program written by Joe Goodrich, Chevron Research Company is used to make this determination. Copies of the program are available from the ODOT Materials Laboratory.

APPARATUS

4.1 Viscometers - Asphalt Institute Vacuum Capillary Viscometer, made of borosilicate glass, annealed, with a precision bore glass capillary. The measuring bulbs are 20 mm long capillary segments. Details and design of construction shown in Figure 2, and viscosity ranges given in Table 1. Calibrate in accordance with ASTM D 2171, Appendix X4.

4.2 Thermometers - Calibrated liquid-in-glass thermometers of an accuracy after correction of 0.02°C (0.04°F) can be used or any other thermometric device of equal accuracy. ASTM Kinematic Viscosity Thermometers 47°F and 47°C are suitable for the most commonly used temperature of 60°C (140°F).

4.2.1 The specified thermometers are standardized at “total immersion” which means immersion to the top of the mercury column, with the remainder of the stem and the expansion chamber at top of the thermometer exposed to room temperature. The practice of completely submerging the thermometer is not recommended. When thermometers are completely submerged, corrections for each individual thermometer based on calibration under conditions of complete submergence must be determined and applied. If the thermometer is completely submerged in the bath during use, the pressure of the gas in the expansion chamber will be higher or lower than during standardization, and may cause high or low readings on the thermometer.

4.2.2 It is essential that liquid-in-glass thermometers be recalibrated periodically using the technique given in ASTM E 77 and that the official corrections be adjusted as necessary to conform to any changes in temperature readings. The thermometer should be read, estimating the reading to 0.005□ C (0.01□ F). New thermometers may initially require a check every week. A commonly used procedure given in ASTM E 77 applies a correction which is based on changes in the ice point calibration.

4.3 Bath--A bath suitable for immersion of the viscometer so that the uppermost timing mark is at least 20 mm below the surface of the bath liquid and with provisions for visibility of the viscometer and the thermometer. Firm supports for the viscometer shall be provided. The efficiency of the stirring and the balance between heat loss and heat input must be such that the temperature of the bath medium does not vary by more than □ 0.03□ C (□ 0.05□ F) over the length of the viscometer, or from viscometer to viscometer in the various bath positions.

4.4 Vacuum System--A vacuum system capable of maintaining a vacuum to within □ 0.5 mm of the desired level up to and including 500 mm of Hg. The essential system is shown schematically in Figure 3. Glass tubing of 6.35 mm (1/4 in.) inside diameter should be used and all glass joints should be air-tight so that when the system is closed, no loss of vacuum is indicated by the open-end mercury manometer having 1 mm graduations. A vacuum or aspirator pump is suitable for the vacuum source.

4.5 Timer--A stop watch or other timing device graduated in divisions of 0.1 second or less and accurate to within 0.05 percent when tested over intervals of not less than 15 minutes.

4.6 Electrical Timing device--may be used only on electrical circuits, the frequencies of which are controlled to an accuracy of 0.05 percent or better .

4.6.1 Alternating currents, the frequencies of which are intermittently and not continuously controlled, as provided by most public power systems, can cause large errors, particularly over short timing intervals, when used to actuate electrical timing devices.

SAMPLE PREPARATION

5.1 Heat the sample with care to prevent local overheating until it has become sufficiently fluid to pour, occasionally stirring the sample to aid heat transfer and to assure uniformity.

5.2 Transfer a minimum of 20 mL into a suitable container such as a small beaker or large test tube. Cover the container to reduce hardening and heat to 163 ± 5.5° C (325 ± 10° F). Stir the sample occasionally to prevent local overheating and slowly so that entrapment of air is avoided. Stir the sample at approximately 1 revolution per second (1 rps).

Note 2 - Certain polymers and bitumen additives may require the material to be heated to a higher temperature in order to obtain adequate fluidity for pouring. Higher temperatures may be used providing there is an agreement between interested parties. Report the heating temperature if it is different than 163 ± 5.5° C.

PROCEDURE

6.1 Maintain the bath at 60 ± 0.03° C (140 ± 0.05° F).

6.2 Select a clean dry Asphalt Institute type viscometer in accordance with table 1. Preheat the viscometer to 163 ± 5.5° C (325 ± 10° F).

6.3 Charge the viscometer by pouring the prepared sample to within 2 mm of the viscometer fill line (see Figure 2).

6.4 Place the charged viscometer vertically in an oven or bath maintained at 163 ± 5.5° C (325 ± 10° F) for a period of 10 ± 2 minutes.

6.5 Remove the viscometer from the oven or bath and immediately insert the viscometer into the testing bath. Insert the viscometer in a holder, and position it vertically in the bath so that the uppermost timing mark is at least 20 mm below the surface of the bath liquid.

6.6 Establish the 300 ± 0.5 mm of Hg vacuum below atmospheric pressure in the vacuum system and connect the vacuum system to the viscometer with the toggle valve or stopcock closed.

6.7 After the viscometer has been in the bath for 30 ± 5 minutes, start the flow of material in the viscometer by opening the toggle valve or stopcock.

6.8 Measure to within 0.1 seconds the time required for the leading edge of the meniscus to pass between a minimum of three successive timing marks.

NOTE 3 -- A minimum efflux time of 10 seconds is required for each timing zone. At least one efflux time less than and one greater than 160 seconds for the No. 100 tube, 80 seconds for the No. 200 tube and 40 seconds for the No. 400 tube is required in order to insure the shear rate brackets the one reciprocal second value. If efflux times do not fall within these requirements, then select another tube size and re-run the test.

6.9 Upon completion of the test, clean the viscometer by several rinsings with an appropriate solvent completely miscible with the material to be tested. Before the viscometer can be used again the viscometer must be dry of all solvents. Periodically clean the viscometer with chromic acid cleaning solution to remove organic deposits, rinse thoroughly with distilled water and residue free acetone.

CALCULATION

7.1 Asphalt Institute viscometers, have four or five timing zones. At least three of these timing zones (flow measurements) should be used to calculate the apparent viscosity at a shear rate of one reciprocal second (see Figure 1). The computer program written by Joe Goodrich, Chevron Research Company is used to make this calculation.

REPORT

8.1 Report the apparent viscosity obtained from the computer program and if appropriate, the heating temperature from 5.2 (Note 2) above.

TABLE 1 Sizes of Viscometers and Approximate Viscosity Ranges

Viscometer Size	Pa□s[A]	Poise[A]
25	2 to 40	20 to 400
50	20 to 300	200 to 3000
100	60 to 1200	600 to 12,000
200	200 to 5000	2000 to 50,000
400 or 400R	900 to 40,000	9000 to 400,000
800 or 800R	40,000 to 800,000	400,000 to 8,000,000

[A] Calibration factors are generally given in Poises/second. To convert to Pa□s, multiply by 10^{-1} (10 P = 1 Pa□s)

NOTE 4 -- The ODOT Materials Laboratory in Salem generally uses the following tube sizes conforming with the above table. For PBA-3 & 5, unaged material: No. 100; PBA-3 & 5, aged material: No. 200; and PBA-6, aged and unaged: No. 200 or 400.

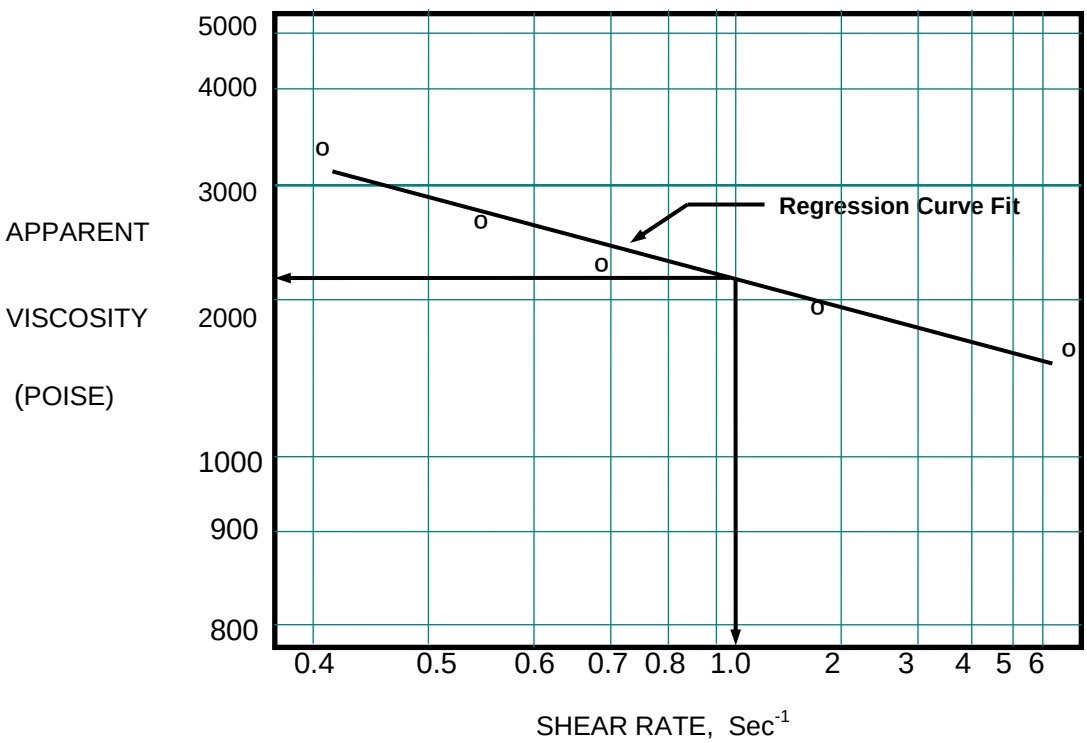

FIGURE 1 Typical Log-Log Rheogram Plot with Example

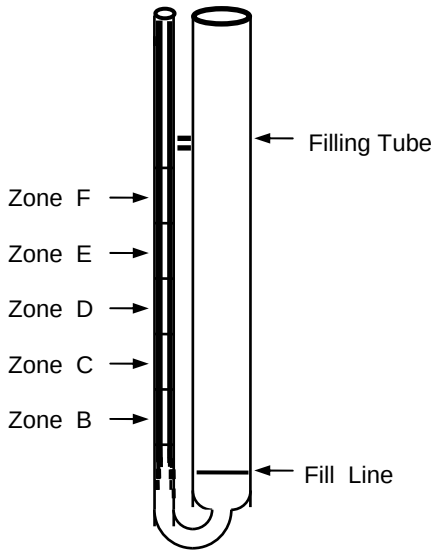

FIGURE 2 Asphalt Institute Vacuum Capillary Viscometer

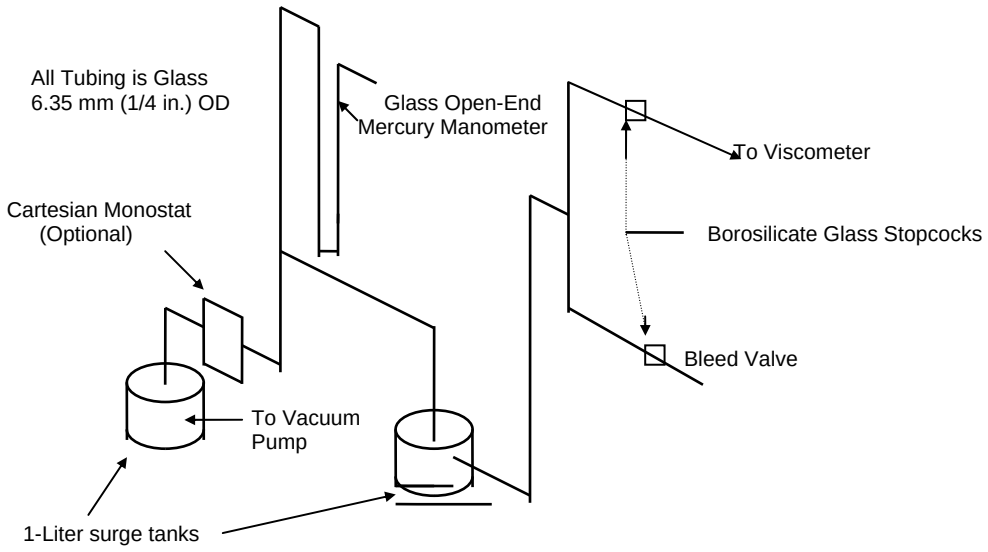

FIGURE 3 Suggested Vacuum System for Vacuum Capillary Viscometers

MATERIALS LABORATORY
ODOT Test Method 432-05
Method of Test for
Bond Strength of Flexible Bituminous Adhesive

PURPOSE

1.1 This method describes a procedure for determining the bond strength of Bituminous adhesive when used to adhere a type 1 reflective raised pavement marker to a 2 3/8" (60mm) steel test plug. The reported strength shall be the average of 3 separate test results.

APPARATUS

2.1 Raised Pavement Marker – ODOT type I reflective.

2.2 Round 2 3/8'(60mm) diameter steel test plug, 1 1/4" (32mm) long, sandblasted on one end and with a 1/2 " threaded hole in the other end.

2.3 Tensile testing machine capable of applying a load of 0.2 in/min and conforming to the requirements of ASTM Practice E4.

2.4 Oven or melter capable of heating the material to the manufacture recommended application temperature.

2.5 Oven capable of holding temperature of 110 +/- 5C

PROCEDURE

3.1 Obtain a representative sample as per ASTM 5167, section 8.1.2

3.2 Melt the sample and bring to manufactures recommend application temperature stirring sample occasionally to ensure a homogonous sample.

3.3 Condition the steel plugs and reflective markers in the 110 +/- 5C oven for a minimum of 1 hour before bonding.

3.4 Pour the hot melt adhesive onto the conditioned marker in sufficient quantity to squeeze out a small bead around the entire periphery of the steel plug. (Approximately 2 ½" diameter of adhesive on marker)

3.5 The heated plug will immediately be firmly pressed onto the hot melt adhesive, squeezing out the excess adhesive.

3.6 Remove excess adhesive squeezed out from around the diameter of the steel plug.

3.7 Allow sample to cure 24 +/- 2 hrs.

3.8 After curing, marker and plug shall be placed in the tensile testing apparatus and mounted in the tensile testing machine.

3.9 Begin tensile testing at the rate of 0.2in/min.

3.10 Record peak load.

4. CALCULATION

Bond strength = L/A

L = Max load (Peak load) lbs
A = Surface area Sq. in.

5. REPORT

The reported bond strength shall be the average of three separate test results.

CHEMISTRY

SECTION 500

CHEMICAL - ODOT TEST METHODS
WITH AASHTO, ASTM AND MFTP TEST REFERENCES

Description of Test	ODOT	AASHTO	ASTM	MFTP
EPA TCLP Analysis	TM 503X	EPA Test Method 1311		
pH Determination of Water using digital pH/mv Meter	TM 504		E 70	
Procedure for Chloride Determination	TM 505	T 260		
Determination of Organic Matter in Soils by Wet Combustion	TM 512X	T 194		
Portland-Cement Content of Hardened Hydraulic-Cement Concrete	TM 523X	T 178	C 1084	
Chemical, Concrete Chloride Analysis	TM 525X	T 260		
Mass [Weight] of Coating on Aluminum-Coated Iron or Steel Articles	TM 540X	T 213	A 428	
Mass [Weight] of Coating on Iron and Steel Articles with Zinc or Zinc-Alloy Coatings	TM 541X	T 65	A 90	
Paint, Structural Coatings, Pre-Qualification	TM 580X		D 1475 D 2697 D 50 D 2369 D 562	
Traffic Paint	TM 591X		D 562 D 711 D 1475	
Glass Spheres, Traffic Paint	TM 593X		D 1214	

PAINT

SECTION 600

PAINT - ODOT TEST METHODS
WITH AASHTO, ASTM AND MFTP TEST REFERENCES

Description of Test	ODOT	AASHTO	ASTM	MFTP
Weight – Per – Gallon Determination of Paints and Coatings	TM 613			
Determination of Zinc in Dry Films of Paints and Coatings	TM 614			

MATERIALS LABORATORY
ODOT Test Method 613-95

Method of Test for
WEIGHT - PER - GALLON DETERMINATION OF PAINTS AND COATINGS

SCOPE

1.1 This method is used to determine the weight - per - gallon or density of paints and coatings. The solvent reduction method is used for this purpose.

APPARATUS

2.1 Pycnometer, 83.2 mL capacity, with lid.

2.2 Thermometer, graduated in 0.1 ° C.

2.3 Balance, capable of weighing to the nearest 0.01 g.

REAGENTS

3.1 Toluene, deionized water or other solvent compatible with the solvent used for the paint or coating.

PROCEDURE

4.1 Tare out the pycnometer and lid.

4.2 Weigh approximately 40 g of sample into the pycnometer. The temperature of the sample should be 25° C (77° F). Record this weight (pycnometer, lid and paint) as “P.”

4.3 Add a small amount of solvent and stir thoroughly. Fill the pycnometer with solvent, while stirring, to within 2 mm from the rim. Place the lid on the pycnometer and fill with solvent through the hole in the lid until a small amount of solvent comes out.

4.4 Quickly wipe away the excess amount of solvent mixture using a piece of lab tissue. Weigh and record this weight (pycnometer, lid paint and solvent) as “M.”

4.5 Clean and dry the pycnometer and lid. Fill with solvent and weigh. Record the weight of the solvent required to fill the cup as “S.”

CALCULATIONS

5.1 Calculate the weight - per - gallon of the sample using the following equation:

$$wpg = \frac{P}{1 - \left[\frac{M - P}{S}\right]} \times 10$$

wpg = weight - per - gallon, in pounds

P, M and S: weights as described in Sections 4.2 through 4.5.

MATERIALS LABORATORY

ODOT Test Method 614-12

Method of Test for

DETERMINATION OF ZINC IN DRY FILMS OF PAINTS AND COATINGS

SCOPE

1.1 This method is used to determine the zinc content of a dry film paint or coating, e.g. primer. The zinc content is determined by atomic absorption spectrophotometry.

APPARATUS

2.1 Muffle furnace - type thermostatically controlled to 450 ± 5º C.

2.2 Atomic absorption spectrophotometer, with a hollow cathode lamp for zinc analysis.

2.3 Analytical balance, capable of weighing to the nearest 0.0001 g.

REAGENTS

3.1 Hydrochloric acid, concentrated, specific gravity 1.19.

3.2 Zinc standards for atomic absorption spectrophotometry.

PROCEDURE

4.1 Weigh accurately 1.0 g of dried film in a 250 mL beaker and add 40 mL of deionized water and 20 mL of HCl.

4.2 Heat the solution for 15 minutes and filter through a No. 41 filter paper into a 1000 mL volumetric flask.

4.3 Add 10 mL of HCI and fill up the volumetric flask to the mark with deionized water.

4.4 Using an Eppendorf micropipet, take a 1 mL aliquot of the solution referred to in Section 4.5 and dilute to 500 mL, use this solution for your analysis.

4.5 Determine the concentration of zinc in the solution by atomic absorption spectrophotometry. Follow the instrument manufacturer's instructions and use standards that bracket the signal for the sample or standards if necessary, keeping in mind the detection limit and the linear dynamic range of the instrument.

CALCULATIONS

5.1 From the concentration of zinc found in the solution and the weight of the sample, determine the zinc content of the dry film.

CEMENT
&
CONCRETE

SECTION 700

CEMENT & CONCRETE - ODOT TEST METHODS WITH AASHTO, ASTM AND MFTP TEST REFERENCES

Description of Test	ODOT	AASHTO	ASTM	MFTP
Flexural Strength of Concrete (Using Simple Beam-Third Front Loading)	TM 707	T 97	C 78	
Making and Curing Concrete Test Specimens in the Lab	TM 715		C 192	
Capping Cylindrical Concrete Specimens	TM 716	T 231	C 617	
Compressive Strength of Cylindrical Concrete Specimens	TM 719	T 22	C 39	
Water Retention Efficiency of Liquid Membrane-Forming Compounds and Impermeable Sheet Materials for Curing Concrete	TM 721			
Compressive Strength of Hydraulic Cement Mortar (Using 50 mm Cube Specimens)	TM 754X	T 106		

MATERIALS LABORATORY
ODOT Test Method 721-17

Method of Test For
WATER RETENTION EFFICIENCY OF LIQUID MEMBRANE FORMING COMPOUNDS AND IMPERMEABLE SHEET MATERIALS FOR CURING CONCRETE
(A Modification of AASHTO T 155)

SCOPE

1.1 This method is intended for laboratory use in determining the efficiency of liquid membrane forming compounds, papers, and other impermeable sheet materials for curing concrete, as measured by their ability to prevent moisture loss during the early hardening period.

2.1 Molds - Molds shall be made of metal, glass, hard rubber or plastic and shall be watertight and rigidly constructed to prevent distortion during molding of the specimens or handling of the mold containing fresh mortar. They shall be thoroughly cleaned before each use (see Note 1). The molds shall have a minimum surface area of 12000 mm^2 (18.6 in^2), and a minimum depth of 19 mm (3/4 in.) (See Note 2). The top surface shall be round, square, or rectangular with length not more than twice the width. The molds shall have a flat rim at the top, on all sides, approximately 6.4 mm (1/4 inch) in width.

Note 1: Care should be taken to avoid use of an excessive amount of oil, grease, or mold release compound on molds, particularly along the top rim where sealing compound will be applied. Use of masking tape on the top rim during application of release compound to prevent contamination has been found to be expedient.

Note 2: Stainless steel pie pans having a 6.00 surface diameter, 4.25 inch diameter at the bottom, and 1.25 inches in depth have been found to work well as curing compound molds.

2.2 Curing Cabinet - A mechanical recirculating oven containing three shelves of sufficient size to hold the samples. The oven shall maintain a temperature of 37.8 ± 1.1° C (100 ± 2° F) and a relative humidity of 32 ± 2%. The oven shall allow movement of conditioned air such that the solvent from the curing compound will be readily evaporated and eliminated from the system. Air flow over the specimens shall be adjusted to provide an evaporation rate of 2.0 to 3.4 g/h as measured by the procedure described in ASTM C156, Annex A1.

2.3 Balances

2.3.1 The balance or scale used for weighing the mold and contents shall have a capacity of 10 Kg or more, sensitive to 1 g or less and accurate within 0.1 percent of the test load at any point within the range used for the test. Within any 1000 g range of test load, difference between readings shall be accurate within 1 g.

2.3.2 The balance or scale used for weighing the spray gun shall have a capacity of 1 Kg or more, sensitive to 0.1 g or less, and accurate within 0.1 percent of the test load at any point within the range of use for this test. Within any 100 g range of test load, a difference between readings shall be accurate within 0.1 g.

2.4 Spray Equipment - Air-operated spray gun with quick detachable air connection. The gun shall be of such size that when loaded with liquid compound, it shall weigh less than 1 Kg.

NUMBER OF SPECIMENS

3.1 Three test specimens shall constitute a test of a given curing compound lot. The average of the three specimens shall not exceed 0.55 Kg/m^2.

PROPORTIONING AND MIXING MORTAR

4.1 Proportioning - The proportions of cement (Note 2) and sand (Note 3) shall be determined by adding dry sand to a cement paste having a water/cement ratio of 0.40 by weight, to produce a flow of 35 ± 5. The flow test shall be made as described in AASHTO T 71, Effect of Organic Impurities in Fine Aggregate on Strength of Mortar.

Note 2: Portland cement shall conform to the requirements for Type I of the Standard Specifications for Portland Cement (AASHTO M 85).

Note 3: The sand for making test specimens shall be natural silica sand from Ottawa, Ill., graded as follows:

Sieve Size	Percentage Retained
150 mm (No.100)	98 ± 2%
300 mm (No. 50)	72 ± 5%
600 mm (No. 30)	2 ± 2%
1.180 mm (No. 16)	none

4.2 Mixing - The mortar shall be mixed at room temperature, preferably 23 ± 1.7° C (73.4 ± 3° F) and at a relative humidity of 40 to 60 percent. The temperature of the mortar at the time of molding shall be 23 ± 1.7° C (73.4 ± 3° F). A generally effective sequence is to add the cement to all of the water in the mixing bowl over a period of 30 seconds while the mixer is running at low speed. Then continue to mix at low speed for 30 seconds. Without stopping the mixer, add the sand over a period of 30 seconds and continue mixing for an additional 1 minute. Stop the mixer for 1 minute. During this time scrap down the sides of the bowl. Start the mixer and run for 1 minute, and promptly begin molding the specimens. Therefore the total mixing time is 4 minutes and 30 seconds.

4.3 The mix used to determine the proportion of sand to cement to produce the specified consistency shall be discarded and shall not be used for making the test specimens.

MOLDING SPECIMENS

5.1 Half fill the mold and spread the mortar with a spatula to create a layer of approximately uniform thickness. Tamp over the entire surface with one stroke of the 25mm x 50 mm (1 in. x 2 in.) face of the tamper per 1000 mm^2 of surface area rounded to the nearest integer. For the pie pan described in Note 2, this would result in 15 tamps. Place a second layer of mortar, sufficient in amount to slightly overfill the mold and tamp in a similar manner. For the pie pan described in Note 2, this would result in 18 tamps. Alternatively instead of tamping the surfaces, you can use a small spatula to consolidate the material in two lifts. Immediately after tamping (or consolidating) the second layer, the specimen shall be struck off with a wood screed, level with

the top edge of the mold. The screed shall have a flat surface no larger than 75 mm (3 inch) in width. One pass only shall be made in the direction of the long axis of the specimen, using a sawing motion of the screed.

5.2 Immediately after molding, wipe the outside surfaces of the molds clean, and place the specimens in the curing cabinet.

INITIAL SURFACE DRYING

6.1 During the interval between molding specimens and applying curing compound, the specimens shall be kept in the curing cabinet maintained under the condition specified in Section 2.2. These specimens shall be allowed to surface dry to the condition that surface water has disappeared and light brushing with a bristle brush will not raise free surface water. When ready for application of curing materials, the mortar surface shall have neither surface water on it nor be dry below the surface.

APPLICATION OF CURING MATERIALS

7.1 Before application of curing material, the specimen surface edges shall be sealed. A V-shaped groove approximately 3.2 mm (1/8 in.) deep and not more than 3.2 mm (1/8 in.) wide shall be formed between the edge of the mortar specimen and the mold (note 4). The groove shall be filled with hot melted paraffin to form an effective seal against moisture loss between the boundary of the specimen and the mold, and shall not extend more than 6.4 mm (1/4 in.) from the mold onto the surface of the specimen.

Note 4: Where the curing medium being tested is paper or other impermeable sheet material, the specimen shall not be grooved.

7.2 The specimen shall be weighed and the curing material applied immediately. The curing material shall be applied to the surface of the specimen in the manner specified for the material to be tested. If the rate of application is not specified, the curing material (membrane forming compounds) shall be applied at the rate of 3.79 liters per 18.6 m^2 (1 gallon per 200 ft^2). The curing agent shall be applied in controlled laboratory atmosphere to only one specimen at a time.

7.2.1 Liquid membrane forming curing compounds for spraying shall be uniformly sprayed on the surface with a spray gun held vertically over the specimen surface at the height required to give uniform application and minimum overspray. The proper coverage shall be determined by weighing the spray gun to the nearest 0.1 g before and after application of the curing compound. Alternatively the proper coverage can be determined by weighing the container for the curing compound to the nearest 0.1 g before and after the application.

7.2.2 Liquid membrane forming curing compounds for brush application shall be uniformly brushed on the surface with a soft bristle brush 25 mm (1 in.) in width. The proper coverage shall be determined by weighing the container for the curing compound and the brush in the container to the nearest 0.1 g before and after application.

7.2.3 Sheet materials shall receive an additional sealing where it comes in contact with the mold in order to prevent moisture loss except through the curing medium. Immediately after application of the sheet curing material, the mold and the specimen shall be weighed to the nearest gram and replaced in the curing cabinet.

CORRECTIONS FOR LOSS IN WT. OF LIQUID CURING MATERIALS DURING TEST

8.1 The loss in weight of volatile matter from a liquid membrane-forming curing compound shall be determined by coating a pie plate with the same quantity of curing material as used on the specimen. The pan shall be placed in the curing cabinet with the test specimen and remain for the duration of the test. The loss in weight of the liquid material shall be used as a correction in calculating the test specimen loss in weight.

DURATION OF TEST

9.1 Immediately after application of the curing material the molded specimens and volatile loss specimen shall be placed in the curing cabinet. One set of specimens shall be placed on each of the top and middle shelves. In the event that only one specimen set is to be tested, dummy pans shall be placed on the other shelf. The specimens shall be level and not subject to vibration. Clear space for air circulation shall be provided between specimens and between specimens and oven walls. The amount of water lost shall be determined 72 hours after application of the curing material by weighing the specimen, unless otherwise specified by the purchaser.

CALCULATION OF LOSS IN WEIGHT

10.1 Loss of Mass:

10.1.1 Calculate the loss of mass from each specimen in grams as follows:

$$ML = M_1 + (NV \times MA) - M_3$$

Where:
ML = Mass loss of the specimen in grams.
M_1 = Mass of the sealed specimen in grams.
NV = Proportion of non-volatile matter in the curing compound in grams.
MA = Mass of the curing compound applied in grams. Equals $M_2 - M_1$.
M_2 - Mass of the specimen immediately after applying curing compound in grams.
M_3 = Mass of specimen at the conclusion of the test in grams.

10.2 Specimen Area:

10.2.1 Calculate the area of the specimen (A) in square millimeters by measuring the dimension of the surface from the inner edges of the seal to the nearest millimetre and applying the appropriate geometric formula. For a 6.00 inch pie pan, taking into account the inner edges of the seal, the surface area is 16,753 mm^2.

10.3 For each specimen, calculate the mass loss per unit area (L) in kg/m^2 as:

$$L = 1000 \times ML/A$$

10.4 *Rejection of Results:*

10.4.1 In a set of three or more specimens, if the difference in moisture loss between the specimen having the greatest loss and that with the least loss exceeds 0.15 kg/m^2, the test shall be repeated and the average taken as that of all specimens in the original and repeat tests. If, after the repeat test, it is determined that the result on a single specimen, whether from the original or repeat test, meets the criteria for rejection as an outlier as given in Practice E178, such value shall be disregarded and a new average calculated that does not include such outlying value.

REPORT

11.1 The loss in weight of water through the curing material after the specified hours of exposure in the curing cabinet shall be expressed as the grams lost per cm^2 of surface. The report shall include the following:

11.1.1 Manufacturer's name and address.

11.1.2 Manufacturer's brand designation.

11.1.3 Curing material.

11.1.4 Method of application.

11.1.5 Manufacturer's batch number.

11.1.6 Laboratory sample identification.

11.1.7 Quantity of curing material represented by sample.

11.1.8 Date sampled.

11.1.9 Source of sample.

11.1.10 Duration of test.

11.1.11 Rate of application (membrane forming compounds).

11.1.12 Loss of water.

PHYSICAL TESTING

SECTION 800

PHYSICAL TESTING - ODOT TEST METHODS
WITH AASHTO, ASTM AND MFTP TEST REFERENCES

Description of Test	ODOT	AASHTO	ASTM	MFTP
Rebar Splices (No. 3 through No. 8)	TM 920 AX TM 920 BX	T 244	A 370	
Aluminum, Physical Properties	TM 921X		B 557	
Guardrail Anchor Cable Assembly	TM 930X	T 244	A 370	
High Strength Bolt	TM 946X		F 606	
Chain Link Fence Fabric	TM 947X	M 181	A 370	
Steel Reinforcing (No. 3 through No. 8)	TM 950 AX TM 950 BX	M 31M	A 615	
Welded Wire Fabric	TM 952X	M 55	A 185/A	
Prestress or Post Tension Seven Wire Strand	TM 956X		A 1061M A 1061	
Barbed Wire	TM 958X	M 280	A 121	
Woven Wire Fence Fabric	TM 959X	M 279	A 116	
Fence Post (Studded Tee)	TM 960AX	M 281	A 702	
Tension Testing of Metallic Materials			E 8	
Measuring Length of Drilled Concrete Cores		T 148	C 174	
Brinell Hardness			E 10	
Rockwell Hardness			E 18	
Steel, Physical Properties		T 244	A 370	
Standard Practices for Load Verification of Testing Machines			E 4	