Drilled Shaft Resource Manual

Geotechnical and Foundation Report

Dodge Canyon Creek Bridge, Bridge 21162, M.P. 20.95

Dodge Canyon Creek Bridge, Bridge 21163, M.P. 21.15

Calapooya Creek Bridge, Bridge 20861, M.P. 22.10

OR138W: Dodge Cr/Calapooya Cr Bridge Replacements
Elkton – Sutherlin Hwy (Hwy. 231, M.P. 20.74 – 22.22)
Douglas County

Published: August 2010
Bid Date: November 2010
EA PE001472-000
Key 16796 (old Keys 14813 and 15970)

CONTRACT AND BONDS
FOR HIGHWAY CONSTRUCTION

OREGON DEPARTMENT OF TRANSPORTATION
SALEM, OREGON

GRADING, PAVING & STRUCTURES

OR138W: DODGE CR/CALAPOOYA CR BRIDGE REPLACEMENTS

ELKTON-SUTHERLIN HIGHWAY

DOUGLAS COUNTY

CONTRACT NUMBER 14292

EXPENDITURE ACCOUNT NUMBER CON03018

CLASS OF PROJECT X-BRS-S231(011)

CONTRACTOR

DATE OF AWARD

SPECIFIED COMPLETION OCTOBER 5, 2012

Key # 16796

Bid Date 11-16-10
Art Date 10-07-10

STATE OF OREGON
DEPARTMENT OF TRANSPORTATION
PLANS FOR PROPOSED PROJECT
GRADING, PAVING & STRUCTURES

OR138W: DODGE CR/CALAPOOYA CR BRIDGE REPLACEMENTS

ELKTON - SUTHERLIN HIGHWAY
DOUGLAS COUNTY
NOVEMBER 2010

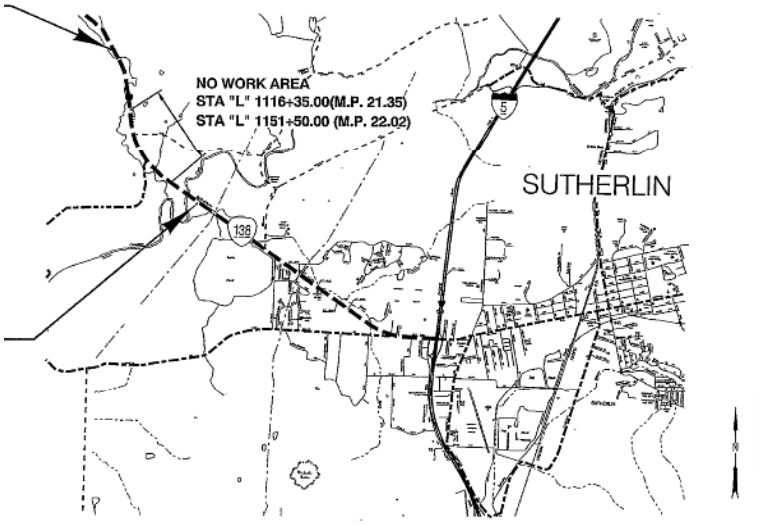

CONCRETE INTERPRISES, INC.
P.O. Box 513
Stayton, OR 97383-0513
Phone: (503) 769-8502
Fax: (503) 769-4931

SUBMITTAL
NO: 00009
DATE: 03/14/11
PAGE: 1 of 1

DESC 1: Drilled Shaft Submittal
DESC 2: Paving Submittal
JOB: OR138W: Dodge Cr/Calapooya Cr (#201062) Elkton Sutherlin Hwy MP 20.74 to MP 22.22 Sutherlin, OR

OPENED: 03/14/11
21 DAYS: 04/04/11
CLOSED:
C.O. #: N/A
TRACK #: N/A

PRIORITY: Normal
STATUS: Open

SENT TO:
Oregon Dept. of Transportation
3500 NW Stewart Parkway
Roseburg, OR 97470
Ted Paselk

ITEM #	DESCRIPTION	PRIORITY	STATUS
00001	Drilled Shaft Submittal	Normal	Open
00002	Paving Submittal	Normal	Open

NOTES: Including paving QC

RECEIVED
Office of Project Manager
Crew 3830

INSERT TAB

Geotechnical Report

Geotechnical and Foundation Report

Calapooya Creek Bridge, Bridge 20861, M.P. 22.10

OR138W: Dodge Cr/Calapooya Cr Bridge Replacements
Elkton – Sutherlin Hwy (Hwy. 231, M.P. 20.74 – 22.22)
Douglas County

Published: August 2010
Bid Date: November 2010
EA PE001472-000
Key 16796 (old Keys 14813 and 15970)

FOR TRAINING ONLY

Oregon Department of Transportation
Region 3 Tech Center
Geo\Environmental Unit

TABLE OF CONTENTS

PROJECT LOCATION iii
1.0 INTRODUCTION 1
1.1 Calapooya Creek Bridge 20861 1
2.0 OFFICE STUDY 2
2.1 Geologic Setting 2
2.2 Site Conditions 2
2.2.1 Calapooya Creek Bridge 20861 2
2.3 Bridge As-Built Information 3
2.3.1 Calapooya Creek Bridge 7338 3
3.0 SUBSURFACE FIELD INVESTIGATIONS AND CONDITIONS 3
3.1 Subsurface Investigation Summary 3
3.1.1 Calapooya Creek Bridge 20861 4
3.2 Laboratory Testing 5
3.3 Ground Water 6
3.3.1 Ground Water at Bridge 20861 6
3.4 Instrumentation 7
4.0 HYDRAULICS INFORMATION 7
4.1 Calapooya Creek Bridge 7
5.0 SEISMICITY EVALUATION 7
5.1 Bridge 20861, Calapooya Creek Bridge 8
6.0 FOUNDATION DESIGN RECOMMENDATIONS 9
6.1 Calapooya Creek Bridge 20861 9
6.1.1 Calapooya Creek Bridge 20862 Bent 1 and 3 Pile Foundations 9
6.1.2 Calapooya Creek Bridge 20862 Bent 2 Drilled Shaft Foundation 11
6.3.3 Lateral Pile Capacity 13
6.5 Wing Walls 14
7.0 GEOTECHNICAL DESIGN RECOMMENDATIONS 15
8.0 CONSTRUCTION RECOMMENDATIONS 15
8.1 Pile Driving 16
8.2 Drilled Shafts 16
8.3 Embankments 17
8.4 Temporary Works; Shoring, Cofferdams, Work and Detour Bridges 18
9.0 SPECIAL PROVISIONS 18
10.0 LIMITATIONS 19
11.0 SIGNATURE PAGE 20
APPENDIX
Appendix A
Laboratory Testing Results Summary
Instrumentation (VWT) Groundwater Level Data Bridge 20861, TH 14813-01
Appendix B
Calapooya Creek Bridge 20861 Foundation Data Sheet
Appendix C
Calapooya Bridge 07338 Plan and Elevation (AS-Built)Drawing 10392
Calapooya Bridge 07338 General Bent Details (As-Built)Drawing 10396
Calapooya Bridge 20861 Plan And Elevation, Drawing 84334

FOR TRAINING ONLY

Calapooya Bridge 20861 Bent 3 (Bent 1 similar), Drawing 84348
Calapooya Bridge 20861 Bent 2, Drawing 84351

Appendix D

500-year and 1000-year Response Spectra
P-y Data For Lateral Pile Loading

Appendix E

Special Provions, Section 00512 – Drilled Shafts
Special Provisions, Section 005920– Drive Piles

FOR TRAINING ONLY

PROJECT LOCATION

The project site is located along Highway OR138W approximately 1.8 to 3.1 miles west of the city of Sutherlin, Oregon. Calapooya Creek Bridge 20861 is at mile point 22.10. The USGS legal description for the Calapooya Creek Bridge is within the Sutherlin, Oregon, 7.5 Minute Quadrangle, provisional edition 1988, in Township 25 South, Range 6 West, Section 14, Willamette Meridian. See Figure 1 (Project Location Map) showing the bridge sites below.

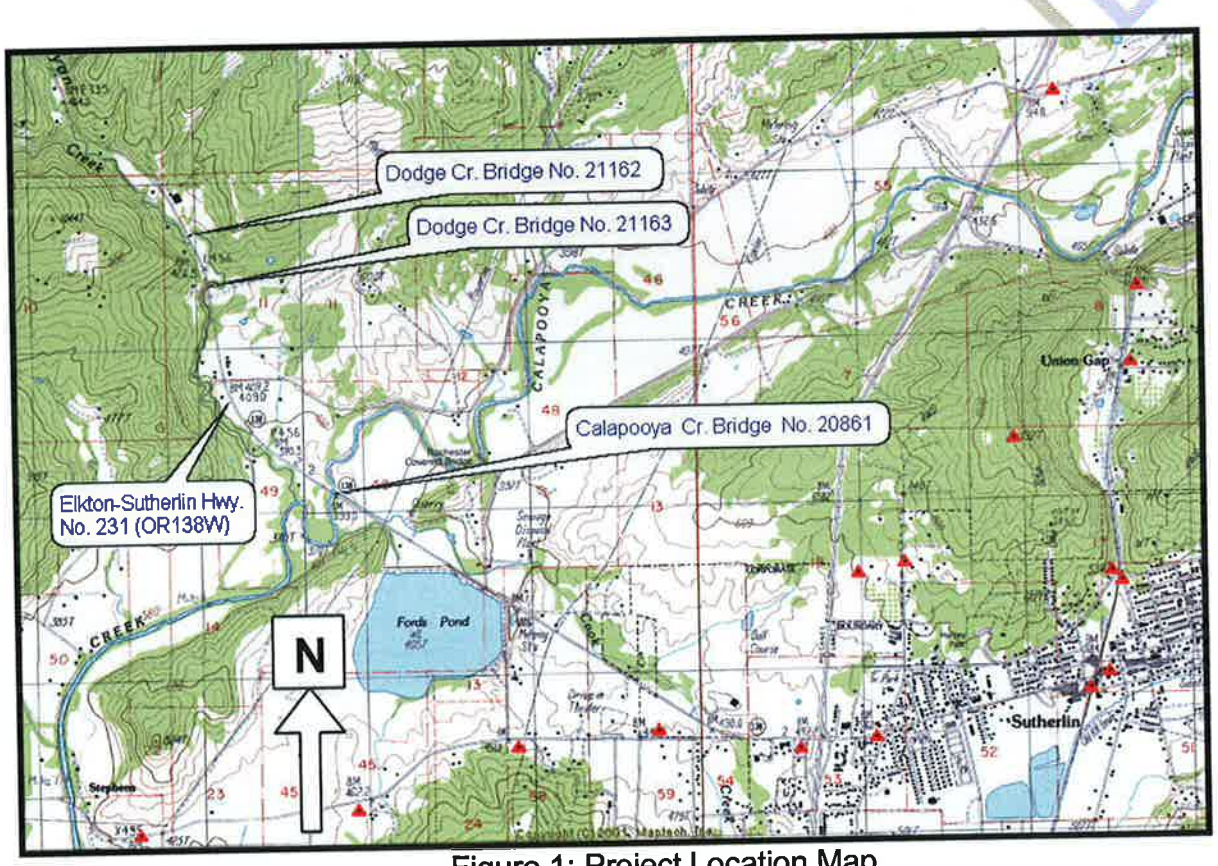

Figure 1: Project Location Map

GEOTECHNICAL AND FOUNDATION REPORT

Calapooya Creek Bridge, Bridge 20861, M.P. 22.10

Dodge Creek and Calapooya Creek Bridge Replacements Section
OR 138W. Elkton-Sutherlin Highway (Hwy. 231, M.P. 20.74 – 22.22)
Douglas County

1.0 INTRODUCTION

The proposed project includes the replacement of three bridges on the Elkton – Sutherlin Highway located at mile points (M.P.) 20.95, 21.15 and 22.10. The purpose of this document is to provide geotechnical recommendations for the support of the proposed Calapooya Creek bridge replacement and associated features.

Directions for this report will reference cardinal directions on the basis that the bridge longitudinal axes are north-south (contrary to the overall highway direction of west-east).

1.1 Calapooya Creek Bridge 20861

The project will replace existing Bridge 07338 at M.P. 22.10 which was constructed in 1953 with a 26 ft. wide (traversable deck width), 332 ft. long, five span structure with cantilever end spans and a pin and hanger center span composed of 6 inch reinforced concrete deck slab construction. Bents 1 and 6 are supported by two individual timber pile caps each supported by 7 timber piles. Bents 2 through 5 are supported by two individual concrete spread footings. Bents 2 through 5 are located in the active channel. Bent 1 is on the western end of the proposed bridge and Bent 6 is on the eastern end of the proposed bridge. Calapooya Creek trends from north to south at the bridge site. Cook Creek trends along the eastern roadway approach embankment and flows into Calapooya Creek immediately north of the proposed bridge location.

Final Plans indicate the proposed replacement structure (Bridge 20861) will be an approximately 47 ft. wide (out to out), 300 ft. long, two span bridge with 54 inch steel beams a 9 ¾" inch cast in place concrete deck. The proposed bridge will be built on the current horizontal and vertical alignments. The proposed replacement structure will have one bent within the active channel. A single-lane 300 ft. long Contractor designed Detour

FOR TRAINING ONLY

Bridge will be constructed on the west side of the existing bridge to carry traffic during construction.

2.0 OFFICE STUDY

The following text in subsections 2.1 and 2.2 and related subsections are quoted from the ODOT Engineering Geology Report titled, "Elkton-Sutherlin Highway", Highway 231, Douglas County, Oregon", dated October 2009 as prepared by Dan Raker C.E.G., and Kimberly Wyttenberg, R.G.

2.1 Geologic Setting

The bridge project area is located within the southwest portion of the Coast Range Geologic Province of Oregon. The general geologic units encountered in all three areas are fill, alluvium and bedrock of the Tenmile Formation. The fill material was incorporated from the existing local terrain to bring the highway and approach embankments to grade with the bridges. The alluvium consists of interbedded silt, sand, clay and gravel deposited in the flood plains of Dodge Creek, Calapooya Creek and Cook Creek. The Tenmile Formation is a sequence of marine sedimentary rocks consisting of Sandstone and Mudstone that were formed in submarine turbidite and basinal deposits within the early Eocene epoch. For more detailed information on the geology of the Dodge and Calapooya Creek areas, refer to the Open-File Report 00-376 by Wells, R. E., et al., 2000,

Geologic Map and Database of the Roseburg 30' x 60' Quadrangle, Douglas and Coos Counties, Oregon, USGS prepared in cooperation with the Oregon Department of Geology and Mineral Industries.

2.2 Site Conditions

2.2.1 Calapooya Creek Bridge 20861

The topography along the flood plain of Calapooya Creek consists of flat to gently rolling terrain bordered by moderate to steep hillsides of the mountain ridges. Calapooya Creek is incised into the flood plain between approximately 10 to 25 feet with bedrock visible in the creek channel beneath the existing bridge. The highway crosses perpendicular to the creek and flood plain near approximate creek mile 9.3. The Highway is elevated across the flood plain on embankments for both the north and south roadway approaches to the existing bridge. The width of the flood plain parallel to the highway alignment is approximately 2,500 feet. Dodge Creek flowing in from the north merges with Calapooya Creek approximately 750 feet west of the existing bridge. Cook Creek flowing in from the south was rechannelized for approximately 1,200 feet along the east side of the south roadway approach embankment. The confluence of Cook Creek with Calapooya Creek is presently located northeast of and partially beneath the existing bridge. See Figure 1 for topographic and geographic features of the area. Land use on and around the flood plain consists mainly of residential dwellings, farm and pasture land along with some areas that have been logged for timber production.

FOR TRAINING ONLY

2.3 Bridge As-Built Information

2.3.1 Calapooya Creek Bridge 7338

According to ODOT's Bridge Data System, the existing seven span structure was constructed in 1953. The existing structure is described in subsections 1.3, further described as having seven span lengths of 15 ft., 54 ft., 64 ft., and 66 ft., symmetrical about the 66 ft. span. Based on ODOT Bridge Drawing 10396, dated 1952, in Appendix C, Bents 1 and 6 are each supported by two columns on separate pile caps supported by 7 timber piles each. The pile caps are hexagonal in shape and are 8 ft. wide by 7.5 ft. long. The "as constructed" timber pile lengths could not be determined from the available information. The interior bents are supported by two columns with separate 6 ft. square spread footings founded on "shale". The per plan foundation elevations on ODOT Bridge Drawing 10396 for Bents 2 through 5 ranged from 355.5 ft. to 357 ft. The allowable footing pressure indicated on ODOT Bridge Drawing 10392 is 5 tons per square foot.

3.0 SUBSURFACE FIELD INVESTIGATIONS AND CONDITIONS

The subsurface exploration at the proposed bridge sites has been completed. The number and spatial coverage of test holes as well as the extent and sampling of materials in test holes are in accordance with, or exceed, AASHTO guidelines and ODOT practices. The subsurface investigation consisting of thirteen test holes (at least one per bent of the proposed structures and one along the proposed fill section) was directed by the Region 3 Tech Center Geo/Environmental Unit. Soil and rock samples recovered in the explorations were classified on site utilizing the methods described in ODOT's Soil and Rock Classification Manual. Subsequently independent checks of the samples were made by a Certified Engineering Geologist for quality control (Dan Raker, C.E.G.). Laboratory testing was also performed to verify soil classifications and engineering properties.

3.1 Subsurface Investigation Summary

The following text in subsections 3.1.1, 3.1.2 and 3.1.3 are quoted from the ODOT Engineering Geology Report titled, "Elkton-Sutherlin Highway", Highway 231, Douglas County, Oregon", dated October 2009 as prepared by Dan Raker C.E.G., and Kimberly

FOR TRAINING ONLY

Wyttenberg, R.G. References made in those quotes to appendix items are to the appendix of the original Engineering Geology Report.

3.1.1 Calapooya Creek Bridge 20861

A total of seven borings were advanced for the proposed Calapooya Creek Bridge 20861. See The Foundation Data Sheet in Appendix B for test hole locations and detailed subsurface informaiton. Test holes 14813-03 (45.0 ft.), 14813-04 (35.0 ft.), 14813-05 (56.0 ft.) and 14813-07 (81.4 ft.) were advanced from the existing bridge deck at or near the proposed bent locations to depths as indicated. Drill holes 14813-01 (35.7 ft.) and 14813-02 (45.7 ft.) were advanced to depths as indicated to evaluate the proposed widening of the proposed approach embankment to the northeast of the proposed bridge. A vibrating wire transducer was installed in test hole 14813-01 at 20 feet (elev. 365.3) below the surface and connected to a data logger on October 10th 2007 to record ground water fluctuations. Test hole 14813-06 (45.7 ft.) was advanced to evaluate the proposed widening of the roadway approach embankment which requires a wall at the southeast corner of the proposed bridge. The subsurface investigation was directed by the Region 3 Geo/Environmental Unit. The drilling for Test Holes 14813-01 through 14813-06 was conducted between September 13th, and the 29th, 2007 utilizing Cascade Drilling from Clackamas, Oregon. A CME-75 truck mounted drill rig was used equipped with an automatic Standard Penetration Test (SPT) hammer. The drilling methods used to advance the holes were 4" (inside diameter) Hollow Stem Auger in the upper soils with a SPT taken at 5 foot intervals, and HQ-3 wire line system to core bedrock. The drilling for Test Hole 14813-07 was conducted on June 8, 2010 utilizing the ODOT Region 4 Drill Crew from Bend, Oregon. A CME-75 truck mounted drill rig was used equipped with an automatic Standard Penetration Test (SPT) hammer. The drilling method used to advance the hole was an HQ-3 wire line system to core bedrock in an HWT casing between the bridge deck and the ground surface. Portions of the text in this subsection are as taken from the "Engineering Geology Report Elkton-Sutherlin Highway 231 (OR138W)" by Dan Raker. C.E.G and Kim Wyttenberg, dated October 2009.

At bent 1 associated with test hole 14813-03, the material encountered from the surface down was approximately 12 feet of clayey silt to silt alluvium that overlies approximately six feet of sand alluvium that overlies approximately two feet of gravel alluvium. The gravel alluvium directly overlies the mudstone bedrock of the Tenmile Formation at the bedrock contact elevation of approximately 366.3 feet or approximately 19.4 feet below the ground surface.

At bent 2 associated with test hole 14813-04 the material encountered from the surface down was approximately 5 feet of gravelly sand alluvium that directly overlies the mudstone bedrock of the Tenmile Formation at the bedrock contact elevation of approximately 368 feet or approximately 5.0 feet below the ground surface.

At bent 3 associated with test hole 14813-05 the material encountered from the roadway surface down was two feet of AC and base rock over approximately 12 feet of gravelly sandy to clayey silt fill material that overlies approximately 9 feet of silt alluvium. The silt alluvium in turn overlies approximately 2 feet of silty sand alluvium that overlies

approximately 6 feet of gravelly silty sand alluvium. The gravelly silty sand alluvium directly overlies the mudstone bedrock of the Tenmile Formation at the bedrock contact elevation of approximately 366.2 feet or approximately 30.4 feet below the roadway surface at highway grade.

Along the eastern edge of the northern approach embankment, drill holes 14813-01 and 14813-02 were placed for that area. Test hole 14813-01 was drilled at the toe of the northern roadway approach embankment approximately 37 feet left and 11 feet lower in elevation than test hole 14813-02. The material encountered in test hole 14813-01 from the ground surface was approximately 1 foot of fill material that overlies approximately 7 feet of clayey silt alluvium. This alluvium in turn overlies approximately 5 feet of silty sand alluvium that overlies approximately 6 feet of sand alluvium which directly overlies the mudstone of the Tenmile Formation at the bedrock contact elevation of approximately 367 feet or approximately 19 feet below the ground surface. Test hole 14813-02 was drilled on the roadway surface. The material encountered from the roadway surface down was two feet of AC and base rock over approximately 10 feet of sandy gravel to gravelly sand fill with trace to some cobbles and boulders that overlies approximately 11 feet of clayey silt alluvium. This alluvium in turn overlies approximately 5 feet of sand alluvium which directly overlies the mudstone bedrock of the Tenmile Formation at the bedrock contact elevation of approximately 369 feet or approximately 27 feet below the roadway surface at highway grade.

Along the eastern edge of the southern roadway approach embankment associated with test hole 14813-06, the material encountered from the roadway surface down was two feet of AC and base rock over approximately 11 feet of gravelly sand to sandy silt with some clay fill that overlies approximately 16 feet sandy silt with some clay to clayey silt with some gravel alluvium which directly overlies the mudstone bedrock of the Tenmile Formation at the bedrock contact elevation of approximately 367 feet or approximately 29 feet below the roadway surface at highway grade.

The bedrock contact elevation difference between bents 1, 2 and 3 is approximately 2 feet with bent 2 at the higher elevation. The bedrock contact elevation difference between all of the test holes drilled for both the roadway approach embankments and the bent locations was approximately 3 feet. The drilling indicates that the bedrock contact has the potential to vary at least 3 feet in the immediate area of the proposed bridge location.

The cobble and boulder material encountered in the roadway approach embankments is composed of mudstone and sandstone material from the surrounding area. It appears that most of the boulder material was placed along the outer slopes of the embankments for erosion and scour protection. However, test holes 14813-02 and 14813-05 did encounter this material in the fill and the 4" (inside diameter)/ 8" (outside diameter) hollow stem auger was able to advance through it with minimal resistance indicated only by rough drilling action.

3.2 Laboratory Testing

Some of the soil and rock core samples recovered from the explorations were tested for engineering properties at the ODOT Material Laboratory located in Salem, Oregon.

Recovered soil samples were tested for; Atterberg Limits, natural moisture content, gradation, and engineering characterization of the materials encountered. Rock core sample were tested to unconfined compressive strength, point load testing, natural moisture content and unit weight. Laboratory testing results are located within Appendix A.

3.3 Ground Water

The following subsections provide generalized subsurface conditions encountered at each of the proposed structure sites and in general for the proposed sliver fill areas More detailed information is contained in Appendix A (Test Hole Logs) and Appendix B (Foundation Data Sheets) regarding the subsurface conditions encountered and referenced in the following subsections. The following text in subsections 3.3.1, 3.3.2 and 3.3.3 are quoted from the ODOT Engineering Geology Report titled, "Elkton-Sutherlin Highway", Highway 231, Douglas County, Oregon", dated October 2009 as prepared by Dan Raker C.E.G., and Kimberly Wyttenberg, R.G. References made in those quotes to appendix items are to the appendix of the original Engineering Geology Report.

3.3.1 Ground Water at Bridge 20861

Ground water at this location for Bridge 20861 was encountered and recorded at the time of drilling, September 13th- 29th, 2007. Ground water was encountered in test holes 14813-01, 14813-02, 14813-03, 14813-05 and 14813-06. Test Hole 14813-04 was drilled in the middle of the stream channel surrounded by exposures of bedrock and did not encounter ground water. A vibrating wire transducer was installed in test hole 14813-01 at a depth of 20 feet (elev. 365.3) below the surface. See Appendix D for recorded ground water levels in test hole 14813-01. Also see the drill logs in Appendix B for the recorded ground water levels at the time of drilling and the Interpretive Geologic Profile of Figure 4 in Appendix A for plotted ground water levels.

Along the north roadway approach embankment at the time of drilling, test holes 14813-01, 14813-02 and 14813-03 encountered ground water between approximate elevations 372 feet and 374 feet. Data logger recordings from the transducer in test hole 14813-01 indicate ground water rose to the surface to a maximum elevation of 386.9 feet on December 29th, 2008.

Along the south roadway approach embankment at the time of drilling, test holes 14813-05 and 14813-06 encountered ground water between approximate elevations 371 feet and 373 feet.

The bottom of the stream channel at this location is at approximate elevation 367 feet. Bedrock elevations between all of the test holes ranged between approximate elevations

FOR PLANNING ONLY

366 feet and 369 feet. At this site expect ground water to fluctuate with the seasonal levels of the creek.

3.4 Instrumentation

A vibrating wire pressure transducer (VWT) was installed for Calapooya Creek Bridge, this VWT was installed within Test Hole 14813-01 to monitor ground water levels. The VWT was connected to a data logger which collected data on 6 hour intervals, the information collected can be referenced in Appendix A.

4.0 HYDRAULICS INFORMATION

4.1 Calapooya Creek Bridge

The Calapooya Creek Bridge will be a multi span bridge with a center pier located within the stream channel. The total scour depth was calculated to negligible based on the FHWA method for calculating contraction/pier scour. The center pier will be socketed greater than 10 ft. into the bedrock layer and shall also have protection with Class 700 rip-rap. Abutment scour will be mitigated by the use rip-rap protection, for this bridge, a minimum rip-rap size of Class 200 was calculated however common engineering practices calls for the use of 2 to 3 times the calculated minimum size, therefore Class 700 rip-rap abutment protection shall be used. Detailed flow depths, velocities and scour information can be found within the ODOT Hydraulics Report titled "OR 138: Calapooya Creek Bridge, Elkton-Sutherlin Hwy, MP 22.1, Douglas County" dated December 6, 2007 as prepared by Bruce Carmichael, P.E..

5.0 SEISMICITY EVALUATION

The recommended seismic design Acceleration Coefficients (A) for all three bridge sites are 0.14g and 0.24g for the 500-year return period peak horizontal ground acceleration on bedrock (PGA) and 1000-year PGA, respectively. The PGA values are based on United States Geologic Survey (USGS) mapping (2002) adopted in October 2004 as the design standard by the ODOT Bridge Engineering Section. The recommended Site Class is "C" based on Table 3.10.3.1-1 of AASHTO LRFD Bridge Design Specifications, 2007, 4th edition (with 2008 interims), (LRFD), the resulting Seismic Zone is "B" for the 500-year return period and "C" for the 1000-year return period. The response spectra were

FOR TRAINING ONLY

generated using the ODOT Design Response Spectrum Program developed by the ODOT Bridge Engineering Section as posted on the internet at www.OREGON.GOV/ODOT/HWY/BRIDGE/standardsmanuals.shtml#Software_Tools_for_Design Inputs to the program are the return period, PGA, Site Class and the site location's latitude and longitude. The 500-year and 1000-year response spectra for the site generated from the ODOT Design Response Spectrum Program are appended in Appendix D for reference.

Liquefaction and lateral spread are considerations given the subsurface conditions described in subsection 3.1 and associated subsections, although design groundwater levels and fines content and plasticity of the soils will factor significantly in these determinations. Typically the 500-year PGA is associated with a serviceability standard which requires that the structure could be traversed by emergency vehicles, albeit, perhaps with some roadway approach work. The 1000-year PGA is typically associated with a non-collapse standard minimizing the potential loss of life. The design seismic event would typically be a magnitude 9.0 earthquake, based on a Cascadia Subduction Zone (CSZ) interface event (as ascertained from the USGS website).

5.1 Bridge 20861, Calapooya Creek Bridge

Liquefaction analyses, incorporating engineering judgment, determined that the Calapooya Creek Bridge site has minimal risk of liquefaction. The design seismic event used for liquefaction analyses were a 500-year PGA of 0.14g and 1000-year PGA of 0.24g. The design groundwater level for seismic analyses is Elevation 374.82 ft. which is the Ordinary High Water level for this bridge site. A groundwater level of Elevation 380.3 ft., the 2-year high water pursuant to the Hydraulics Report, was also assessed, the difference in the analyses conclusions were negligible. A Vibrating Wire Transducer (VWT) and data logger used to monitor groundwater levels with in TH 14813-01 found that water levels are generally below approximately Elevation 375 ft. except for the months of January, February and March when several short duration (one two week) water level periods above Elevation 380 ft. occurred. Although there is loose Sandy and Silty alluvial material overlying the Mudstone bedrock, the fines content and plasticity of the material is such that only isolated instances of liquefaction are anticipated during the 500-year and 1000-year design seismic events. The fines content and plasticity of the soil was not evaluated by

FOR TRAINING ONLY

laboratory testing until after preliminary analyses suggested that there was a concern for liquefaction. The additional laboratory data and subsequent evaluations determined that only a small percentage (1 of 15 for the 500-year event and 2 of 15 for the 1000-year event) of the soil samples appeared to have liquefaction potential. Given the disjointed nature of the alluvial stringers which have been deposited and re-cut by the creek, it is believed the samples indicating liquefaction potential are not continuous enough to suggest a layer of soil is subject to appreciable liquefaction risk.

6.0 FOUNDATION DESIGN RECOMMENDATIONS

In accordance with ODOT's design practice, the foundation design was performed using AASHTO LRFD Bridge Design Specifications, 2007, 4th edition (with 2008 interims). Foundation design recommendations for the bridge are discussed below under the subsection following headings.

6.1 Calapooya Creek Bridge 20861

It is recommended that the end bents (Bent 1 & 3) of the proposed two-span bridge be founded on either HP12x53 or HP12x84 driven H-pile with tip protection. Piles are considered the best option for the subsurface conditions encountered. Changes late in the design process lead to the addition of the HP12x84 option. The piling will derive their axial capacity, primarily through skin friction and end bearing on and within the Tenmile Bedrock Formation.

The interior bent of the bridge, located within the wetted channel, is desired to be supported on a drilled shaft to minimize the environmental footprint that either a spread footing or pile cap would have within the ordinary high water. A single large diameter drilled shaft was selected by the Structural Engineering staff for design. The drilled shaft will derive its axial capacity primarily through skin friction within the very soft Mudstone of the Tenmile Bedrock Formation.

6.1.1 Calapooya Creek Bridge 20862 Bent 1 and 3 Pile Foundations

The resistance factor for Bents 1 and 3 is 0.40 as determined from LRFD Table 10.5.5.2.3-1 for nominal resistance of a single pile in compression using static pile analysis with a combination of the Nordlund and Tomlinson methods and pile driving criteria

FOR TRAINING ONLY

determined by FHWA Gates Equation or Wave Equation, depending on the required ultimate capacity. Due to driving stress limitations induced during the driving process, the piles are recommended to be ASTM A572, Grade 50 (50 ksi yield strength). Due to driving stress limitations induced during the driving process, the recommended factored resistances are based on ASTM A36 (36 ksi yield strength) and are therefore less than the actual structural capacity of the pile.

The pile are anticipated to obtain the predominate portion of their capacity within the upper 5 ft. to 10 ft. of the mudstone bedrock which underlies the bridge site. The mudstone bedrock within the extent of the anticipated pile penetration was modeled as a stiff clay with an undrained shear strength (cohesion) of 32,400 psf. With the mudstone modeled in this manner the pile will reach "end bearing" in the rock within the embedded distance in the rock.

Table 5 provides detailed information for the piling recommended for Bents 1 and 3.

Bent	Pile Type, Size, Material Specification & Tip Treatment	Ultimate (Nominal) Capacity (kips)	LRFD Resistance Factor	Factored Resistance (kips)	Pile Driving Criteria	Estimated Average Cutoff Elevation (ft)	Estimated Length (ft)	Minimum Required Tip Elevation (ft)
1	Option A HP 12x53 ASTMA572 Grade 50 Reinforced Tip	560	0.40	225	FHWA Gates Equation	389	40	361
3						389	40	361
1	Option B HP12x84 ASTM A572 Grade 50 Reinforced Tip	890	0.40	355	Wave Equation	389	40	361
3						389	40	361

Table 5 – Calapooya Bridge 20861, Axial Pile Capacity Information

The pile sizes provided in Table 5 are based on axial loading of the pile. If controlling loads other than axial loads, such as lateral loads from earth pressures or seismic loading conditions, are anticipated, then the pile should be evaluated for those loads and sized accordingly. The cutoff elevation was estimated by assuming 2 ft. embedment into the pile cap. The estimated length is based on the difference between the estimated cutoff elevation and the estimated tip elevation, rounded up based on engineering judgment.

FOR TRAINING ONLY

The estimated tip elevation is based on penetration of approximately 5 to 10 ft. into the very soft mudstone bedrock. The minimum required tip elevation is based on 5 ft. of penetration in to the rock contact at each bent location, which was uniform throughout the bridge site.

For pile foundations designed in accordance with the above recommendations, settlement is estimated to be less than approximately 1 inch and to be elastic in nature, occurring as the load is applied.

6.1.2 Calapooya Creek Bridge 20862 Bent 2 Drilled Shaft Foundation

The factored Bent 2 loads for the proposed 8 ft. diameter drilled shaft provided by the Structural Engineering staff were as follows:

Service (load factors = 1.00):
Dead Load = 1997 kips, Live Load 589 kips, Total Service Factored Load = 2586 kips

Strength (dead load factor = 1.25, live load factor = 1.75):
Dead Load = 2496 kips, Live Load 1031 kips, Total Strength Factored Load = 3527 kips

The resulting factored load (and factored resistance) for geotechnical design purposes is 3527 kips, although appropriate adjustments were made when considering strain compatibility with the design methodologies and settlement at the service load state. The resistance factor for Bent 2 is 0.36 as determined from LRFD Table 10.5.5.2.3-1 for nominal resistance of a single drilled shaft in compression using a variety of static capacity analyses methods. The resistance factor of 0.36 incorporates a reduction factor of 20% relative to the typical resistance factor of 0.40 due to a lack of redundancy (a single shaft vs. two or more shafts).

Difficulty in the drilled shaft analyses arose modeling the mudstone rock because it is very weak. On the basis of 12 unconfined compression tests performed on rock core samples recovered from Test Hole 14813-07, an unconfined compressive strength value of 450 psi was selected for design. Due to the fissile nature of the rock, it loses strength quickly as the moisture content decreases. Rock core samples for laboratory testing were delivered

FOR TRAINING ONLY

to the laboratory and tested within 32 hours of the samples being recovered from the ground.

The drilled shaft analyses were conducted on the basis that the axial capacity of the drilled shaft will be predominantly (in not solely) from skin friction. Three different methods for estimating the required factored resistance of the drilled shaft within the mudstone bedrock were employed. These included two methods in the computer program SHAFT (version 5.0) for clay and weak rock, and a method from the 1988 FHWA Manual "Drilled Shafts: Construction Procedures and Design Methods" for weak rock. The SHAFT method for clay suggested that a 26 ft. rock socket would be adequate, as verified by a hand calculation. Since the mudstone is nearly 3 times stronger than the stiffest clay used to develop the clay method, an additional SHAFT program method was selected. The SHAFT method for weak rock resulted in a 62 ft. rock socket with an RQD (rock quality designation) of 54%, the average RQD of the rock core within the depth of concern. It was found that this method was very sensitive to variations in RQD such that an RQD = 75% resulted in a rock socket length of 17 ft. and an RQD = 100% resulted in a rock socket length of 6 ft., while an RQD = 65% matched the 26 ft. rock socket length suggested by the SHAFT method for clay. As a result of the SHAFT weak rock method's sensitively to RDQ, little regard was placed on the results of those analyses. The weak rock method from the 1988 FHWA Manual resulted in an estimated rock socket length of 51 ft.

The conclusion of the drilled shaft analyses is that the required factored resistance of 3527 kips can be adequately provided by a rock socket length of 45 ft., a factored resistance of approximately 78.4 kips per lineal foot of 8 ft. diameter shaft. There is approximately 5 ft. of soil overlaying the rock contract such that the total drilled shaft length will be 50 ft. long. Table 6 provides detailed information for the drilled shaft recommended for Bent 2.

Bent	Drilled Shaft Diameter (ft)	Ultimate Capacity/ Nominal Resistance (kips)	LRFD Resistance Factor	Factored Resistance (kips)	Factored Resistance per lineal ft. (kips/ft.)	Estimated Ground Line Elevation (ft)	Required Rock Socket Length (ft)	Minimum Required Tip Elevation (ft)

FOR TRAINING ONLY

2	8.00	9797	0.36	3527	78.4	372.9, Rock Contact at 367.9	45.0	322.9

Table 6 – Calapooya Bridge 20861, Axial Drilled Shaft Capacity Information

The drilled shaft data provided in Table 6 is based on axial loading of the drilled shaft. If controlling loads other than axial loads, such as lateral loads from earth pressures or seismic loading conditions, are anticipated, then the drilled shaft should be evaluated for those loads and sized accordingly.

It is recommended that cross-hole sonic logging (CSL) tubes be placed in the drilled shaft on the inside of the rebar cage. CSL tubes allow for the integrity of the drilled shaft concrete to be evaluated shortly after placement of the concrete. The CLS tubes are to be placed at the rate of one per foot of drilled shaft diameter, 8 in this case. The CLS tubes are to be placed evenly along the inside circumference of the drilled shaft rebar cage.
As more fully discussed in subsection 8.4, careful study of the Drill Logs for Test Holes 14813-04 and 14813-07 in Appendix A should be made to more fully understand the nature of the mudstone and potential ramification that may have on the means and methods of advancing the hole and stabilizing the hole wall. Both Test Hole 14813-07 and 14813-04 indicate approximately 7 to 4 ft. zones of mudstone which is weathered, fractured and sheared including seams of soft clay and silt.

For drilled shaft foundations designed in accordance with the above recommendations, settlement is estimated to be less than approximately 1 inch and to be elastic in nature, occurring as the load is applied.

6.1.3 Lateral Pile Capacity

An Excel spreadsheet in Appendix D contains the recommended P-y data for developing curves for use with the computer programs "COMP624P", "Lpile" and "Group", which are used for determining the lateral deflection characteristics of the pile and drilled shaft supported bents. For seismic analyses, this data should be used with the realization that these computer programs do not truly represent seismic lateral loading when used in the cyclic load mode. The P-y curve data is provided as a function of elevation to eliminate any

FOR TRAINING ONLY

confusion that may occur while the design pile cap elevations and finish ground lines are finalized. This file is available for electronic transmittal upon request.

The P-y soil profiles extend below the rock contact. As such the foundation elements should be terminated in the computer model at the minimum required tip elevation provided in Tables 5 and 6 of subsections 6.3.1 and 6.3.2. If additional penetration of the pile or drilled shaft is determined to be desired to provide additional lateral restraint, the minimum required tip elevation should be discussed with the Geotechnical Engineer.

The lateral loading soil profiles are based on COMP624P and Lpile internally generated P-y curves for the appropriate soil types encountered. The friction angles, undrained shear strengths and unit weights are the same as those used for the static pile and drilled shaft capacity analyses. The shear strengths, stiffness modulus values (k values), and unit weights are based on correlations to the density of the soil which is estimated from the standard penetration tests. For seismic design purposes, since liquefaction is not anticipated, only standard adjustments of the internally generated P-y curves have been made. The mudstone was modeled as a stiff clay with free water with an undrained shear strength of 32,400 psf.

6.2 Wing Walls

Wing walls with lengths of up to approximately 12 ft. (Bridge 21162) 18 ft. (Bridge 21163) and 16 ft. (Bridge 20861) are indicated in the Final Plans at each corner of the proposed structures. It is understood that these wing walls will be cantilevered from the bridge abutments beneath the bridge deck. This will impose additional loads on the piling supporting the bridge, although lateral loads due to earth pressures will be partially offset due to the wing wall on the opposite end of the pile cap. The magnitude of the earth pressures may be estimated using a soil friction angle of 34 degrees and a unit weight of 125 pcf. It is recommended that at-rest earth pressures be considered at the end of the wing wall/pile cap connection. If the wing wall is sufficiently long and/or flexible, active earth pressures may be used at the tips of the wing walls. The active and at-rest earth pressure coefficients are 0.28 and 0.44, respectively. The earth pressure loads can be linearly interpolated along the length of the wing wall between these values. If it is determined that bridge foundations designed without specific consideration for wing wall

FOR TRAINING ONLY

loading can not adequately support the wing walls, specific foundation design recommendations will be provided upon request.

7.0 GEOTECHNICAL DESIGN RECOMMENDATIONS

Fill heights will be up to 10 ft. in height along the new roadway alignment. Embankments shall be constructed in accordance to ODOT Standard Specification 00330 and special provisions and as recommended herein. General embankment fill slope rates are recommended to be no steeper than 1.0 vertical to 2.0 horizontal (1.0V:2.0H). Stone embankment fill slopes can be constructed with a slope rate up to 1.0V:1.5H or flatter. Cut heights in soil are anticipated to be less than 5 ft. in height along the new roadway alignment. Cuts shall be constructed in accordance to ODOT Standard Specification 00330 and special provisions and as recommended herein. Cuts in soil slope rates are recommended to be no steeper than 1.0V:1.5H). If rock cuts are anticipated, slope rates of no steeper than 1.0V:1.25 or paralleling existing rock cuts, whichever is flatter, is recommended.

ODOT Roadway Engineering Section standard sliver fill and benching details should be incorporated into the final contract plans. Settlement of up to approximately 3 in. is anticipated in the foundation soils below the proposed embankments.

Earthwork should be done during the drier portion of the year to avoid wet soils and inclement conditions. To help control moisture contents of the materials used to construct the embankments, this work would ideally be done between the months of June and September when a trace amount of the average annual historical precipitation occurs. If the project schedule requires embankment work to be done during wet weather or soil conditions, granular materials such as stone embankment material or other approved granular materials may be required to provide for satisfactory behavior.

8.0 CONSTRUCTION RECOMMENDATIONS

Construction submittals with geotechnical elements such as pile driving, cofferdams, falsework, detour and work bridges and shoring should be submitted to the Geotechnical

FOR TRAINING ONLY

Engineer for review. Construction submittals containing both geotechnical and structural elements should be submitted to the Bridge Engineer for review as well.

For supplemental construction related information, the reader is directed to the sections of this report titled:

- "2.0 Office Study"
- "3.0 Subsurface Field Explorations and Conditions"
- "6.0 Foundation Design Recommendations"
- "7.0 Geotechnical Design Recommendations"

Additionally, it is suggested that the report be read in its entirety for a fuller comprehension of construction related issues and concerns.

8.1 Pile Driving

The driving criterion for the lower ultimate capacity (375 kip) H-piles are to be determined based on the FHWA Gates Equation (Section 00520.42 (b) in the Standard Specifications and related Special Provisions). Piling associated with Option A for Bridge 20861, discussed in subsection 6.3.1, shall be driven based on criteria developed from the FHWA Gates Equation in Standard Specification 00520.42(b). All other piling in subsections 6.1, 6.2 and 6.3.1 shall be driven based on criteria developed from a Wave Equation Analysis (Section 00520.42(c) in the Standard Specifications and related Special Provisions). The material specification for the piling and the usage of reinforced pile tips are intended to help prevent damage to the pile during pile driving operations.

8.2 Drilled Shafts

The drilled shaft foundation at Bridge 20861, Bent 2 will require permanent casing to accommodate the non-contact lap splice between the drilled shaft rebar cage and the column rebar cage. A construction joint in the drilled shaft concrete approximately 6 ft. below the ground surface will be required to accommodate the non-contact lap splice in the rebar cages. The permanent casing will act as stay in place form and shoring for the upper portion of the drilled shaft.

Depending on the means and methods employed by Contractor to advance the drilled shaft excavation, temporary casing below this depth may be desired to stabilize the very soft mudstone. If temporary casing is used, it shall not be allowed to stay in place as the

FOR TRAINING ONLY

skin friction of the shaft would be compromised below acceptable limits. As mentioned in subsection 6.3.2, the mudstone is very fissile and subject to degradation (and hence hole instability) if it is allowed to experience a decrease in moisture content, additionally, as discussed below, there may be soft clay seams encountered in the advancement of the hole. As such, it is anticipated that the shaft excavation will be more likely to be successful it a wet method employing slurry to both increase hydrostatic pressures against the hole wall (a stabilizing effect on the stability of the hole) and to lift cuttings. Attempts to pump the hole dry should not be made, least the hole wall stability be compromised.

Careful study of the Drill Logs for Test Holes 14813-04 and 14813-07 in Appendix A should be made to more fully understand the nature of the mudstone and potential ramification that may have on the means and methods of advancing the hole and stabilizing the hole wall. Of note in Test Hole 14813-07 is a weathered, fractured and sheared zone between depths of 26.4 ft. and 33.3 ft. (Elevations 346.4 ft. and 339.5 ft.). A clay seam between depths of 26.5 ft. and 28.5 ft. (Elevations 346.3 ft. and 344.3 ft.) with an undrained shear strength, as measured by a torvane, of between 720 and 1420 psf was noted. A similar seam is noted as soft silt lenses in TH 14813-04 between a depth of 20.0 ft. to 23.5 ft (Elevations 352.9 ft. and 349.4 ft.).

8.3 Embankments

The construction of the embankment widening and sliver fills are expected to require diligent inspection to ensure that recommended standards are followed and that adequate compaction is obtained. The inspector should not allow the sliver fills to be constructed by end-dumping material at the top of the slope and walking it in with equipment. Earthwork equipment is to be operated on horizontal lifts parallel to the centerline of the roadway, constructing the sliver fills from the bottom up. As with all earthwork, this work should be done during the drier portion of the year to avoid wet soils and inclement conditions. To control moisture contents during construction of the embankments, this work would ideally be done between the months of June and September when a trace amount of the average annual historical precipitation occurs. If the project schedule requires embankment work to be done during wet weather or soil conditions, granular materials such as stone embankment material or other approved granular materials may be required to provide for satisfactory behavior.

FOR TRAINING ONLY

8.4 Temporary Works; Shoring, Cofferdams, Work and Detour Bridges

A cofferdam may be desired at Bent 2 of Bridge 20861. If a cofferdam is used, unless the sheet pile can be driven the desired embedment in the mudstone bedrock, it may require internal bracing due to the shallow depth to bedrock. Continual pumping of cofferdam excavation is likely to be required.

Shoring may be required between the ends of Bridge 20861 and the proposed adjacent detour bridge to the west (downstream) side. Likewise shoring may be required between the ends of Bridges 21162 and 21163 and the adjacent existing bridges and/or roadway to the west. Conventional solider pile shoring may be appropriate for these locations, depending on the depth of the required excavations, rock contact depths and required pile penetrations, otherwise preboring of the solider pile or other methods of shoring may be required.

At Bridge 20861 temporary support for splicing steel beams may be required as the beams may not be delivered to the site full length, although use of an offset splice and cantilevering of the beams may allow for the interior bent to provide the required support. Conventional driven false bents or mudsills supported on rock may be applicable at this location.

A detour structure is proposed adjacent to Bridge 20861, westerly (downstream) of the existing bridge and a work bridge easterly (upstream) may be required. Adequately designed foundations may be satisfactorily supported on piles or mudsills on suitably dense native materials, including very soft mudstone bedrock. Bedrock maybe encountered near the ground surface at some locations. Mudsill bearing capacity calculations should incorporate an appropriate reduction for saturated soils and account for the proximity of slopes.

9.0 SPECIAL PROVISIONS

Markups to the special provisions for Sections 512 (Drilled Shafts) and 520 (Driven Piles) have been appended in Appendix E for reference.

FOR TRAINING ONLY

10.0 LIMITATIONS

The analysis and recommendations presented in this report and its appendices are based on the data obtained from the subsurface explorations performed at the locations indicated on the drill logs and Foundation Data Sheet and from other sources of information discussed in this report. The subsurface explorations have provided detailed information at specific locations in the project area. However, variations in soil and rock conditions may exist between the test holes and groundwater levels may fluctuate periodically. The data shown in the exploration log of each test hole applies only to that particular test hole drilled on the dates indicated and is not intended to be conclusive as to the character of any material or conditions between or around the test holes (see Standard Specification 00120.25). Any interpretation or evaluation of this report by individuals or entities outside of the Oregon Department of Transportation is done so at the sole risk of the individuals or entity.

The nature and extent of any variations in subsurface materials or conditions may not become evident until construction. If subsurface conditions different than those identified in the test holes are observed or are encountered during construction, or appear to be present beneath or beyond excavations, the Geotechnical Engineer should be advised at once so that the Geotechnical Engineer can observe and review these conditions and reconsider the design recommendations where necessary.

It is recommended that construction operations relating to earthwork and foundations be observed by the Geotechnical Engineer or the Project Geologist to determine if the work is proceeding in accordance with the intent of the geotechnical recommendations and to allow for design changes as necessary.

FOR TRAINING ONLY

11.0 SIGNATURE PAGE

Reviewed by: Pete Castro, P.E. (Civil, Geotechnical)
Region 3 Senior Geotechnical Engineer
Stamping for Sections* 5.0, 6.3, 6.4, 7.0, 8.0, 9.0, 10.0

Prepared by: Wade Holaday, P.E.
Region 3 Highway Engineer
Stamping for Sections* 1.0, 2.0, 3.0, 4.0, 5.1, 6.0

* Includes all subsections of the specified section or subsection unless a subsection is specifically listed for another registrant.

FOR TRAINING ONLY

APPENDIX

Appendix A

Bridge Logs
Laboratory Testing Results Summary
Instrumentation (VWT) Groundwater Level Data Bridge 20861, TH 14813-01

Appendix B

Calapooya Creek Bridge 20861 Foundation Data Sheet

Appendix C

Calapooya Creek Bridge 07338 Plan and Elevation(As-Built) Drawing 10392
Calapooya Creek Bridge 07338 General Bent Details (As-Built) Drawing 10396

Calapooya Creek Bridge 20861 Plan and Elevation, Drawing 84334
Calapooya Bridge 20861 Bent 3 (Bent 1 Similar), Drawing 84348
Calapooya Bridge 20861 Bent 3 Section (Bent 1 Similar), Drawing 84349
Calapooya Creek Bridge 20861 Bent 2, Drawing 84351

Appendix D

500-year and 1000-year Response Spectra

Calapooya Creek Bridge P-y Data for Lateral Pile Loading

Appendix E

Special Provisions, Section 00512 – Drilled Shafts
Special Provisions, Section 00520 – Driven Piles

FOR TRAINING ONLY

APPENDIX A GEOTECHNICAL AND FOUNDATION REPORT

OR138W: Dodge Cr/Calapooya Cr Bridge Replacements

DRILL LOG

OREGON DEPARTMENT OF TRANSPORTATION

			Hole No. 14813-01
Project Calapooya Creek Bridge Replacement		Purpose Embankment Foundation	E.A. No. PE001304
Highway 138W		County Douglas	Key No. 14813
Hole Location Northing: 645,145.16	Easting: 4,157,861.35		Start Card No.
Equipment CME-75		Driller Joel & Sam	Bridge No. 20861
Project Geologist Dan Raker		Recorder Bryce Rogers	Ground Elev. 385.3 ft
Start Date September 28, 2007	End Date September 29, 2007	Total Depth 35.7 ft	Tube Height

Test Type

"A" - Advancer
"X" - Auger
"C" - Core
"N" - Standard Penetration Test
"U" - Undisturbed Sample
"D" - Oversize Split Spoon Sample

Rock Abbreviations

Discontinuity	Shape	Surface Roughness
J - Joint	Pl - Planar	P - Polished
F - Fault	C - Curved	Sl - Slickensided
B - Bedding	U - Undulating	Sm - Smooth
Fo - Foliation	St - Stepped	R - Rough
S - Shear	Ir - Irregular	VR - Very Rough

Typical Drilling Abbreviations

Drilling Methods	Drilling Remarks
WL - Wire Line	LW - Lost Water
HS - Hollow Stem Auger	WR - Water Return
DF - Drill Fluid	WC - Water Color
SA - Solid Auger	DP - Down Pressure
CA - Casing Advancer	DR - Drill Rate
HA - Hand Auger	DA - Drill Action

Depth (ft)	Test Type, No.	Percent Recovery	Soil: Driving Resistance / Rock: Discontinuity Data Or RQD%	Percent Natural Moisture	Material Description (SOIL: Soil Name, USCS, Color, Plasticity, Moisture, Consistency/Relative Density, Texture, Cementation, Structure, Origin. ROCK: Rock Name, Color, Weathering, Hardness, Discontinuity Spacing, Joint Filling, Core Recovery, Formation Name.)	Unit Description	Graphic Log	Drilling Methods, Size and Remarks	Water Level/ Date	Backfill/ Instrumentation
0					(0.0) Final Log 7/31/10	**0.0 - 1.0 Calapooya Unit-1; (Fill)**		Sta."L"1153+66.0, -49.6		
						1.0 - 7.5 Calapooya Unit-2 CLAY, CH; orange-brown, high plasticity, damp, stiff; (Alluvium)		Drilling method 4" ID HS (0'-20') Note: ground water on 12/29/08 was at -0.2'		
5	N1	53	4-6-6	24	N-1 (5.0-6.5) CLAY, CH; orange-brown, high plasticity, damp, stiff. (Alluvium) Lab No. 10-001057, LL=66, PI=35.					
						7.5 - 12.5 Calapooya Unit-3 Sandy SILT with some clay, ML; brown to orange-brown, low plasticity, moist, medium stiff to stiff, fine grained sand; (Alluvium)				
10	N2	80	3-3-5	20	N-2 (10.0-11.5) Sandy SILT with some clay, ML; brown to orange-brown, low plasticity, moist, medium stiff to stiff, fine grained sand. (Alluvium) Lab No. 10-001058, LL=37, PI=12.				9/29/07 13'	
						12.5 - 18.5 Calapooya Unit-4 Silty SAND, SM; orange-brown, nonplastic, wet, very loose, fine to medium grained; (Alluvium)				
15	N3	100	1-1-2	22	N-3 (15.0-16.5) Silty SAND, SM; orange-brown, nonplastic, wet, very loose, fine to medium grained. (Alluvium) Lab No. 10-001059, LL=ND, PI=NP.			Wet Spoon		
								Bedrock Contact 18.5'		
						18.5 - 35.7 Calapooya Unit-6 MUDSTONE, gray, fresh, extremely soft to very soft, very close to moderately close jointing, thin bedded, fissile along bedding planes; (Tenmile Formation)				
20	N4	23	50/3"		N-4 (20.0-20.4) MUDSTONE; gray, fresh, extremely soft. (Tenmile Formation)			Drilling method changed to HQ3 WL (20'-35.7')		
	C1	100	RQD = 0 R0 RQD = 63		C-1 (20.4-21.7) MUDSTONE, gray, fresh, extremely soft, very close to close jointing, fissile. (Tenmile Formation)					
	C2	100	R0 RQD = 72		C-2 (21.7-26.7) MUDSTONE, gray, fresh, extremely soft, very close to close jointing, fissile. (Tenmile Formation)					
25										

Depth (ft)	Test Type, No.	Percent Recovery	Soil / Rock: Driving Resistance / Discontinuity Data Or RQD%	Percent Natural Moisture	Material Description (SOIL: Soil Name, USCS, Color, Plasticity, Moisture, Consistency/Relative Density, Texture, Cementation, Structure, Origin. ROCK: Rock Name, Color, Weathering, Hardness, Discontinuity Spacing, Joint Filling, Core Recovery, Formation Name.)	Unit Description	Graphic Log	Drilling Methods, Size and Remarks / Water Level/ Date	Backfill/ Instrumentation
25									
	C3	100	R0-R1 RQD = 72		C- 3 (26.7-31.7) MUDSTONE, gray, fresh, extremely soft to very soft, close to moderately close jointing, fissile. (Tenmile Formation)				
30									
	C4	75	R0-R1 RQD = 90		C- 4 (31.7-35.7) MUDSTONE, gray, fresh, extremely soft to very soft, close to moderately close jointing, fissile. (Tenmile Formation)			Back filled with bentonite chips (35.7'-21.5') Set transducer at 20.25' sand (21.5'-18.5') bentonite chips (18.5'-0')	
35					(35.7) Bottom of hole.			Bottom of hole 35.7'	
40									
45									
50									
55									
60									
63									

DRILL LOG

OREGON DEPARTMENT OF TRANSPORTATION

			Hole No. **14813-02**
Project **Calapooya Creek Bridge Replacement**		Purpose **Embankment Foundation**	E.A. No. **PE001304**
Highway **138W**		County **Douglas**	Key No. **14813**
Hole Location Northing: **645,116.54**	Easting: **4,157,837.08**		Start Card No.
Equipment **CME-75**		Driller **Joel & Sam**	Bridge No. **20861**
Project Geologist **Dan Raker**		Recorder **Bryce Rogers**	Ground Elev. **396.1 ft**
Start Date **September 28, 2007**	End Date **September 28, 2007**	Total Depth **45.7 ft**	Tube Height

Test Type
"A" - Advancer
"X" - Auger
"C" - Core
"N" - Standard Penetration Test
"U" - Undisturbed Sample
"D" - Oversize Split Spoon Sample

Rock Abbreviations

Discontinuity	Shape	Surface Roughness
J - Joint	Pl - Planar	P - Polished
F - Fault	C - Curved	Sl - Slickensided
B - Bedding	U - Undulating	Sm - Smooth
Fo - Foliation	St - Stepped	R - Rough
S - Shear	Ir - Irregular	VR - Very Rough

Typical Drilling Abbreviations

Drilling Methods	Drilling Remarks
WL - Wire Line	LW - Lost Water
HS - Hollow Stem Auger	WR - Water Return
DF - Drill Fluid	WC - Water Color
SA - Solid Auger	DP - Down Pressure
CA - Casing Advancer	DR - Drill Rate
HA - Hand Auger	DA - Drill Action

Depth (ft)	Test Type, No.	Percent Recovery	Driving Resistance (Soil) / Discontinuity Data Or RQD% (Rock)	Percent Natural Moisture	Material Description (SOIL: Soil Name, USCS, Color, Plasticity, Moisture, Consistency/Relative Density, Texture, Cementation, Structure, Origin. ROCK: Rock Name, Color, Weathering, Hardness, Discontinuity Spacing, Joint Filling, Core Recovery, Formation Name)	Unit Description	Graphic Log	Drilling Methods, Size and Remarks	Water Level/ Date	Backfill/ Instrumentation
0					(0.0) Final Log 7/31/10	**0.0 - 0.5 AC**		Sta."L"1153+62.5, -12.3		
						0.5 - 2.0 Base Rock		Drilling method 4" ID HS (0'-30')		
						2.0 - 12.0 Calapooya Unit-1 Sandy GRAVEL to Gravelly SAND both with trace to some cobbles and boulders trace silt and/or clay, GW, SP; light brown, brown, gray, nonplastic to low plasticity, damp, loose to medium dense, fine to medium sand, fine to coarse gravel; (Fill)				
5	N1	53	11-10-9		N- 1 (5.0-6.5) Sandy GRAVEL with trace to some cobbles and boulders trace silt, GW; gray, nonplastic, damp, medium dense, fine to coarse. (Fill)					
10	N2	53	2-4-5		N- 2 (10.0-11.5) Gravelly SAND with some cobbles and boulders trace silt and clay, SP; brown, light brown and gray, low plasticity, damp, loose, fine to medium grained. (Fill)					
						12.0 - 22.5 Calapooya Unit-2 CLAY to CLAY with some sand, CH, brown, medium to high plasticity, damp to moist, soft to stiff; (Alluvium)				
15	N3	100	3-5-8	29	N- 3 (15.0-16.5) CLAY, CH, brown, high plasticity, damp, stiff. (Alluvium) Lab No. 10-001060, LL=94, PI=62.					
20	N4	100	1-1-2	27	N- 4 (20.0-21.5) CLAY with some sand, CH, brown, medium plasticity, moist, soft. (Alluvium) Lab No. 10-1061, LL=50, PI=22.				9/28/07 ▽ 23'	
						22.5 - 27.0 Calapooya Unit-4 Silty SAND with some thin lenses of clayey Silt, SM,				
25										

Depth (ft)	Test Type, No.	Percent Recovery	Soil: Driving Resistance / Rock: Discontinuity Data Or RQD%	Percent Natural Moisture	Material Description (SOIL: Soil Name, USCS, Color, Plasticity, Moisture, Consistency/Relative Density, Texture, Cementation, Structure, Origin. ROCK: Rock Name, Color, Weathering, Hardness, Discontinuity Spacing, Joint Filling, Core Recovery, Formation Name.)	Unit Description	Graphic Log	Drilling Methods, Size and Remarks / Water Level/ Date	Backfill/ Instrumentation
25	N5	100	1-2-4	28	N- 5 (25.0-26.5) Silty SAND with some thin lenses of clayey Silt, SM, orange-brown, nonplastic to low plasticity in clayey Silt lenses, wet, loose, fine to medium grained. (Alluvium) Lab No. 10-001062, LL-ND, PI=NP.	**orange-brown, nonplastic to low plasticity in clayey Silt lenses, wet, loose, fine to medium grained; (Alluvium)**		← Bedrock Contact 27.0'	
30	N6	20	50/3"		N- 6 (30.0-30.3) MUDSTONE, gray, slightly weathered, extremely soft, fissile, (Tenmile Formation)	**27.0 - 45.7 Calapooya Unit-6 MUDSTONE, gray, slightly weathered to fresh, extremely soft to very soft, close to moderately close jointing, thin bedded, fissile along bedding planes; (Tenmile Formation)**		Drilling method changed to HQ3 WL (30'-45.7')	
	C1	100	RQD = 0 R1 RQD = 93		C- 1 (30.3-31.7) MUDSTONE, gray, fresh, very soft, close jointing. (Tenmile Formation)			WR WC - gray-brown	
	C2	88	R0-R1 RQD = 84		C- 2 (31.7-36.7) MUDSTONE, gray, fresh, extremely soft to very soft, close to moderately close jointing. (Tenmile Formation)				
35									
	C3	100	R0-R1 RQD = 92		C- 3 (36.7-42.2) MUDSTONE, gray, fresh, extremely soft to very soft, close to moderately close jointing, fissile. (Tenmile Formation)				
40									
	C4	100	R1 RQD = 86		C- 4 (42.2-45.7) MUDSTONE, gray, fresh, very soft, close to moderately close jointing. (Tenmile Formation)			Back filled with bentonite chips (45.7'-1') concrete (1'-0')	
45					(45.7) Bottom of hole.			Bottom of hole 45.7'	
50									
55									
60									
63									

DRILL LOG

OREGON DEPARTMENT OF TRANSPORTATION

			Hole No. **14813-03**
Project **Calapooya Creek Bridge Replacement**		Purpose **Bridge Foundation**	E.A. No. **PE001304**
Highway **138W**		County **Douglas**	Key No. **14813**
Hole Location Northing: **645,037.37**	Easting: **4,157,915.23**		Start Card No.
Equipment **CME-75**		Driller **Joel & Sam**	Bridge No. **20861**
Project Geologist **Dan Raker**		Recorder **Dan Raker**	Ground Elev. **385.7 ft**
Start Date **September 26, 2007**	End Date **September 27, 2007**	Total Depth **45.0 ft**	Tube Height

Test Type

"A" - Advancer
"X" - Auger
"C" - Core
"N" - Standard Penetration Test
"U" - Undisturbed Sample
"D" - Oversize Split Spoon Sample

Rock Abbreviations

Discontinuity	Shape	Surface Roughness
J - Joint	Pl - Planar	P - Polished
F - Fault	C - Curved	Sl - Slickensided
B - Bedding	U - Undulating	Sm - Smooth
Fo - Foliation	St - Stepped	R - Rough
S - Shear	Ir - Irregular	VR - Very Rough

Typical Drilling Abbreviations

Drilling Methods	Drilling Remarks
WL - Wire Line	LW - Lost Water
HS - Hollow Stem Auger	WR - Water Return
DF - Drill Fluid	WC - Water Color
SA - Solid Auger	DP - Down Pressure
CA - Casing Advancer	DR - Drill Rate
HA - Hand Auger	DA - Drill Action

Depth (ft)	Test Type, No.	Percent Recovery	Soil: Driving Resistance / Rock: Discontinuity Data Or RQD%	Percent Natural Moisture	Material Description (SOIL: Soil Name, USCS, Color, Plasticity, Moisture, Consistency/Relative Density, Texture, Cementation, Structure, Origin. ROCK: Rock Name, Color, Weathering, Hardness, Discontinuity Spacing, Joint Filling, Core Recovery, Formation Name.)	Unit Description	Graphic Log	Drilling Methods, Size and Remarks / Water Level/ Date	Backfill/ Instrumentation
0					(0.0) Final Log 7/31/10	**0.0 - 12.2 Calapooya Unit-2 Clayey SILT with trace to some sand, MH; brown, medium plasticity, moist, soft to stiff; (Alluvium)**		Sta."L"1154+71.9, 7.9	
					(2.0) Advanced casing through bridge deck approximately 9.9' to ground surface below.			Drilling method 4" CA (0'-19.2')	
5	N1	73	7-6-6	22	N- 1 (4.2-5.7) Clayey SILT with some sand, MH, brown, medium plasticity, moist, stiff. (Alluvium) Lab No. 10-001063, LL=50, PI=21.				
10	N2	73	2-1-2	29	N- 2 (9.2-10.7) Clayey SILT with trace sand, MH, brown, medium plasticity, moist, soft. (Alluvium) Lab No. 10-001064, LL=52, PI=21.			9/27/07 12'	
						12.2 - 18.0 Calapooya Unit-4 Silty SAND with trace clay, SM, mottled brown, gray-brown, low plasticity, wet, very loose, fine to medium grained; (Alluvium)			
15	N3	100	2-1-1	27	N- 3 (14.2-15.7) Silty SAND with trace clay, SM, mottled brown, gray-brown, low plasticity, wet, very loose, fine to medium grained. (Alluvium) Lab No. 10-001065, LL=34, PI=10.				
						18.0 - 19.4 Calapooya Unit-5 GRAVEL with some sand, GP, dark gray, nonplastic, wet, medium dense, fine, rounded; (Alluvium)		Bedrock Contact 19.4'	
20	N4 / C1 / C2	100 / 85 / 100	50/5" / RQD = 0 / R0 / RQD = 0 / R0 / RQD = 0		N- 4 (19.2-19.7) From (19.2'-19.4') GRAVEL with some sand, GP, dark gray, nonplastic, wet, medium dense, fine, rounded. (Alluvium) From (19.4'-19.7') MUDSTONE, gray, fresh, extremely soft to very soft. (Tenmile Formation) C- 1 (19.7-20.0) MUDSTONE, gray, fresh, extremely soft. (Tenmile Formation) C- 2 (20.0-25.0) MUDSTONE, gray, fresh, extremely soft, very close to moderately close jointing. Hand friable to coarse sand, fissile along bedding. (Tenmile Formation)	**19.4 - 45.0 Calapooya Unit-6 MUDSTONE, gray, fresh, extremely soft to very soft, very close to wide jointing, laminated to thin**		Drilling method changed to HQ3 WL (19.2'-45')	
25									

Depth (ft)	Test Type, No.	Percent Recovery	Driving Resistance / Discontinuity Data Or RQD% (Soil / Rock)	Percent Natural Moisture	Material Description (SOIL: Soil Name, USCS, Color, Plasticity, Moisture, Consistency/Relative Density, Texture, Cementation, Structure, Origin. ROCK: Rock Name, Color, Weathering, Hardness, Discontinuity Spacing, Joint Filling, Core Recovery, Formation Name.)	Unit Description	Graphic Log	Drilling Methods, Size and Remarks / Water Level/ Date	Backfill/ Instrumentation
25	C3	100	R0-R1 RQD = 68		C- 3 (25.0-30.0) MUDSTONE, gray, fresh, extremely soft, close to moderately close jointing. Hand friable to coarse sand, fissile along bedding. (Tenmile Formation)	**bedding dipping 30 to 45 degrees, fissile along bedding planes, some zones hand friable to coarse sand; (Tenmile Formation)**		Blocked	
30	C4	100	R0-R1 RQD = 80		C- 4 (30.0-35.0) MUDSTONE, gray, fresh, extremely to very soft, close to moderately close to wide jointing. Hand friable to coarse sand, fissile along bedding. (Tenmile Formation)				
35	C5	100	R1 RQD = 88		C- 5 (35.0-40.0) MUDSTONE, gray, fresh, very soft, moderately close jointing. Laminated bedding 30 to 45 degrees, fissile along some bedding planes. (Tenmile Formation)				
40	C6	100	R0-R1 RQD = 80		C- 6 (40.0-45.0) MUDSTONE, gray, fresh, very soft, moderately close jointing. Laminated bedding 30 to 45 degrees, fissile along some bedding planes, with extremely soft zones from (41.5'-41.5') and (41.7'-42.0'). (Tenmile Formation)			Blocked Back filled with bentonite chips (45'-0')	
45					(45.0) Bottom of hole.			Bottom of hole 45'	
50									
55									
60									
63									

DRILL LOG

OREGON DEPARTMENT OF TRANSPORTATION

		Hole No.	14813-04
Project **Calapooya Creek Bridge Replacement**	Purpose **Bridge Foundation**	E.A. No.	PE001304
Highway **138W**	County **Douglas**	Key No.	14813
Hole Location Northing: **644,952.12** Easting: **4,158,065.14**		Start Card No.	
Equipment **CME-75**	Driller **Joel & Sam**	Bridge No.	20861
Project Geologist **Dan Raker**	Recorder **Kim Wyttenberg**	Ground Elev.	372.9 ft
Start Date **September 13, 2007** End Date **September 14, 2007**	Total Depth **35.0 ft**	Tube Height	

Test Type

"A" - Advancer
"X" - Auger
"C" - Core
"N" - Standard Penetration Test
"U" - Undisturbed Sample
"D" - Oversize Split Spoon Sample

Rock Abbreviations

Discontinuity	Shape	Surface Roughness
J - Joint	Pl - Planar	P - Polished
F - Fault	C - Curved	Sl - Slickensided
B - Bedding	U - Undulating	Sm - Smooth
Fo - Foliation	St - Stepped	R - Rough
S - Shear	Ir - Irregular	VR - Very Rough

Typical Drilling Abbreviations

Drilling Methods	Drilling Remarks
WL - Wire Line	LW - Lost Water
HS - Hollow Stem Auger	WR - Water Return
DF - Drill Fluid	WC - Water Color
SA - Solid Auger	DP - Down Pressure
CA - Casing Advancer	DR - Drill Rate
HA - Hand Auger	DA - Drill Action

Depth (ft)	Test Type, No.	Percent Recovery	Soil: Driving Resistance / Rock: Discontinuity Data Or RQD%	Percent Natural Moisture	Material Description (SOIL: Soil Name, USCS, Color, Plasticity, Moisture, Consistency/Relative Density, Texture, Cementation, Structure, Origin. ROCK: Rock Name, Color, Weathering, Hardness, Discontinuity Spacing, Joint Filling, Core Recovery, Formation Name.)	Unit Description	Graphic Log	Drilling Methods, Size and Remarks / Water Level/ Date	Backfill/ Instrumentation
0					(0.0) Final Log 7/23/09	**0.0 - 5.0 Calapooya Unit-5 Gravelly Silty SAND, SW; brown, nonplastic, moist to wet, loose to medium dense, medium to coarse sand, fine rounded gravel; (Alluvium)**		Sta."L"1156+43.6, -8.0	
					(2.0) Advanced casing through bridge deck approximately 23.2' to gravel bar surface below.			Drilling method 4" CA (0'-10')	
5	N1	71	20-50/2"		N- 1 (5.0-5.7) MUDSTONE, gray, fresh, extremely soft, fissile. (Tenmile Formation)	**5.0 - 35.0 Calapooya Unit-6 MUDSTONE, gray, fresh, extremely soft to very soft, very close to close jointing, thin bedded, fissile along bedding; (Tenmile Formation)**		Bedrock Contact 5.0'	
10	N2	100	50/3"		N- 2 (10.0-10.3) MUDSTONE, gray, fresh, extremely soft, fissile. (Tenmile Formation)			Drilling method changed to HQ3 WL (10'-35')	
	C1	100	R0 RQD = 91		C- 1 (10.3-12.5) MUDSTONE, gray, fresh, extremely soft, very close jointing, fissile along bedding. (Tenmile Formation)				
	C2	100	R0 RQD = 0		C- 2 (12.5-15.0) MUDSTONE, gray, fresh, extremely soft, very close jointing, fissile along bedding. (Tenmile Formation)			Lost core out of barrel	
15	C3	100	R1 RQD = 52		C- 3 (15.0-18.0) MUDSTONE, gray, fresh, very soft, very close to close jointing, fissile along bedding. (Tenmile Formation)				
	C4	100	R1 RQD = 0		C- 4 (18.0-20.0) MUDSTONE, gray, fresh, very soft, very close to close jointing, fissile along bedding. (Tenmile Formation)			Lost core out of barrel	
20	C5	100	R0-R1 RQD = 68		C- 5 (20.0-23.5) MUDSTONE, gray, fresh, extremely soft to very soft, very close to close jointing, fissile along bedding. (Tenmile Formation)			Soft silt lenses within the MUDSTONE EOS, 9-13-2007 BOS, 9-14-2007	
	C6	100	R0-R1 RQD = 47		C- 6 (23.5-25.0) MUDSTONE, gray, fresh, extremely soft to very soft, very close to close jointing, fissile along bedding. (Tenmile Formation)			New catcher and ring installed	
25									

Depth (ft)	Test Type, No.	Percent Recovery	Driving Resistance / Discontinuity Data Or RQD% (Soil / Rock)	Percent Natural Moisture	Material Description SOIL: Soil Name, USCS, Color, Plasticity, Moisture, Consistency/Relative Density, Texture, Cementation, Structure, Origin. ROCK: Rock Name, Color, Weathering, Hardness, Discontinuity Spacing, Joint Filling, Core Recovery, Formation Name.	Unit Description	Graphic Log	Drilling Methods, Size and Remarks / Water Level/ Date	Backfill/ Instrumentation
25	C7	100	R0-R1 RQD = 52		C- 7 (25.0-30.0) MUDSTONE, gray, fresh, extremely soft to very soft, very close to close jointing, fissile along bedding. (Tenmile Formation)			Minor silt lenses mixed within the clay, thin clay zone at 25.4
30	C8	100	R1 RQD = 40		C- 8 (30.0-35.0) MUDSTONE, gray, fresh, very soft, very close to close jointing, fissile along bedding. (Tenmile Formation)			Back filled with bentonite chips (35'-0')
35					(35.0) Bottom of hole.			Bottom of hole 35'.
40								
45								
50								
55								
60								
63								

DRILL LOG

OREGON DEPARTMENT OF TRANSPORTATION

			Hole No. **14813-05**
Project **Calapooya Creek Bridge Replacement**		Purpose **Bridge Foundation**	E.A. No. **PE001304**
Highway **138W**		County **Douglas**	Key No. **14813**
Hole Location Northing: **644,864.20**	Easting: **4,158,164.97**		Start Card No.
Equipment **CME-75**		Driller **Joel & Sam**	Bridge No. **20861**
Project Geologist **Dan Raker**		Recorder **Dan Raker**	Ground Elev. **396.6 ft**
Start Date **September 27, 2007**	End Date **September 27, 2007**	Total Depth **56.0 ft**	Tube Height

Test Type
- "A" - Advancer
- "X" - Auger
- "C" - Core
- "N" - Standard Penetration Test
- "U" - Undisturbed Sample
- "D" - Oversize Split Spoon Sample

Rock Abbreviations

Discontinuity	Shape	Surface Roughness
J - Joint	Pl - Planar	P - Polished
F - Fault	C - Curved	Sl - Slickensided
B - Bedding	U - Undulating	Sm - Smooth
Fo - Foliation	St - Stepped	R - Rough
S - Shear	Ir - Irregular	VR - Very Rough

Typical Drilling Abbreviations

Drilling Methods	Drilling Remarks
WL - Wire Line	LW - Lost Water
HS - Hollow Stem Auger	WR - Water Return
DF - Drill Fluid	WC - Water Color
SA - Solid Auger	DP - Down Pressure
CA - Casing Advancer	DR - Drill Rate
HA - Hand Auger	DA - Drill Action

Depth (ft)	Test Type, No.	Percent Recovery	Driving Resistance (Soil) / Discontinuity Data Or RQD% (Rock)	Percent Natural Moisture	Material Description (SOIL: Soil Name, USCS, Color, Plasticity, Moisture, Consistency/Relative Density, Texture, Cementation, Structure, Origin. ROCK: Rock Name, Color, Weathering, Hardness, Discontinuity Spacing, Joint Filling, Core Recovery, Formation Name)	Unit Description	Graphic Log	Drilling Methods, Size and Remarks	Water Level/ Date	Backfill/ Instrumentation
0					(0.0) Final Log 7/31/10	**0.0 - 0.5 AC**		Sta."L"1157+75.8, 7.0		
						0.5 - 2.0 Base Rock		Drilling method 4" ID HS (0'-29.5')		
						2.0 - 14.0 Calapooya Unit-1 Gravelly Clayey SILT with trace to some sand to Gravelly Sandy SILT with trace clay both with trace to some cobbles and boulders to Sandy SILT with trace gravel, ML, brown to gray and gray-brown, non plastic to medium plasticity, damp to moist,medium stiff to stiff; (Fill)				
5	N1	66	2-5-5		N- 1 (4.5-6.0) Gravelly Clayey SILT with trace to some sand, cobbles and boulders, ML, brown to gray, non plastic to medium plasticity, damp to moist, stiff. (Fill)					
10	N2	66	2-3-5		N- 2 (9.5-11.0) From (9.5'-9.8') Gravelly Sandy SILT with some clay cobbles and boulders, ML, brown to gray, nonplastic to medium plasticity, damp to moist, stiff. (Fill) From (9.8'-11') Sandy SILT with trace gravel, ML, gray-brown, low plasticity, moist, medium stiff. (Fill)					
15	N3	66	4-7-6	23	N- 3 (14.5-16.0) SILT with some clay and sand, ML, dark gray, low plasticity, moist, stiff. (Alluvium) Lab No. 10-001066, LL=39, PI=13.	**14.0 - 23.0 Calapooya Unit-2 SILT with some clay and sand, ML, dark gray to gray-brown, low plasticity, moist, medium stiff to stiff, has thin interbedded Sandy SILT lenses that are moist to wet; (Alluvium)**				
20	N4	87	1-2-4	23	N- 4 (19.5-21.0) SILT with some clay and sand, ML, dark gray-brown, low plasticity, moist, medium stiff, has thin interbedded Sandy SILT lenses that are moist to wet. (Alluvium) Lab No. 10-001067, LL=40, PI=14.					
25	N5	87	2-4-10	18	N- 5 (24.5-26.0)	**23.0 - 24.9 Calapooya Unit-3 Silty SAND with trace gravel, SM, brown,**			9/27/07 ▽ 24'	

Depth (ft)	Test Type, No.	Percent Recovery	Driving Resistance / Discontinuity Data Or RQD% (Soil / Rock)	Percent Natural Moisture	Material Description (SOIL: Soil Name, USCS, Color, Plasticity, Moisture, Consistency/Relative Density, Texture, Cementation, Structure, Origin. ROCK: Rock Name, Color, Weathering, Hardness, Discontinuity Spacing, Joint Filling, Core Recovery, Formation Name.)	Unit Description	Graphic Log	Drilling Methods, Size and Remarks / Water Level/ Date	Backfill/ Instrumentation
25					From (24.5'-24.9') Silty SAND with trace gravel, SM, brown, nonplastic, moist to wet, medium dense, medium grained. (Alluvium) Lab No. 10-001068, LL=NP, PI=ND. From (24.9'-26') Gravelly Silty SAND, SW, brown, nonplastic, moist to wet, medium dense, fine rounded gravel, medium to coarse grained sand. (Alluvium)	**nonplastic, moist to wet, medium dense, medium grained.; (Alluvium)** **24.9 - 30.4 Calapooya Unit-5 Gravelly Silty SAND, SW, brown, nonplastic, moist to wet, medium dense, fine rounded gravel, medium to coarse grained sand; (Alluvium)**			
30	N6	100	7-19-50 RQD = 0		N- 6 (29.5-31.0) From (29.5'-30.4') Gravelly Silty SAND, SW, brown, nonplastic, moist to wet, medium dense, fine rounded gravel, medium to coarse grained sand. (Alluvium)			Wet spoon	
	C1	100	R0-R1 RQD = 64		From (30.4'-31') MUDSTONE, moderately weathered to fresh, gray, extremely soft. (Tenmile Formation) C- 1 (31.0-36.0) MUDSTONE, dark gray, fresh, extremely soft to very soft, very close to close jointing, thin bedded, fissile along bedding. (Tenmile Formation)	**30.4 - 56.0 Calapooya Unit-6 MUDSTONE, gray, dark gray moderately weathered to fresh, extremely soft to very soft, very close to close jointing, thin bedded, fissile along bedding planes; (Tenmile Formation)**		Bedrock Contact 30.4' Drilling method changed to HQ3 WL (29.5'-56')	
35	C2	100	R0 RQD = 0		C- 2 (36.0-41.0) MUDSTONE, dark gray, fresh, extremely soft, very close jointing, thin bedded, fissile along bedding, shear pattern with some slickensided structures. (Tenmile Formation)			Shear/Slickenside patterns within mudstone	
40	C3	100	R0 RQD = 0		C- 3 (41.0-46.0) MUDSTONE, dark gray, fresh, extremely soft, very close to close jointing, thin bedded, fissile along bedding. (Tenmile Formation)				
45	C4	100	R0 RQD = 0		C- 4 (46.0-51.0) MUDSTONE, dark gray, fresh, extremely soft, very close to close jointing, thin bedded, fissile along bedding. (Tenmile Formation)				
50	C5	100	R0-R1 RQD = 8		C- 5 (51.0-56.0) MUDSTONE, dark gray, fresh, extremely soft to very soft, soft zone (54.8'-55.1'), very close to close jointing, thin bedded, fissile along bedding. (Tenmile Formation)				
55								Back filled with bentonite chips (56'-1') concrete (1'-0')	
					(56.0) Bottom of hole.			Bottom of hole 56.0'	
60									
63									

DRILL LOG

OREGON DEPARTMENT OF TRANSPORTATION

		Hole No.	14813-06
Project **Calapooya Creek Bridge Replacement**	Purpose **Wall Foundation**	E.A. No.	PE001304
Highway **138W**	County **Douglas**	Key No.	14813
Hole Location Northing: **644,811.74** Easting: **4,158,278.11**		Start Card No.	
Equipment **CME-75**	Driller **Joel & Sam**	Bridge No.	20861
Project Geologist **Dan Raker**	Recorder **Bryce Rogers**	Ground Elev.	395.4 ft
Start Date **September 28, 2007** End Date **September 28, 2007**	Total Depth **45.7 ft**	Tube Height	

Test Type
"A" - Advancer
"X" - Auger
"C" - Core
"N" - Standard Penetration Test
"U" - Undisturbed Sample
"D" - Oversize Split Spoon Sample

Rock Abbreviations

Discontinuity	Shape	Surface Roughness
J - Joint	Pl - Planar	P - Polished
F - Fault	C - Curved	Sl - Slickensided
B - Bedding	U - Undulating	Sm - Smooth
Fo - Foliation	St - Stepped	R - Rough
S - Shear	Ir - Irregular	VR - Very Rough

Typical Drilling Abbreviations

Drilling Methods	Drilling Remarks
WL - Wire Line	LW - Lost Water
HS - Hollow Stem Auger	WR - Water Return
DF - Drill Fluid	WC - Water Color
SA - Solid Auger	DP - Down Pressure
CA - Casing Advancer	DR - Drill Rate
HA - Hand Auger	DA - Drill Action

Depth (ft)	Test Type, No.	Percent Recovery	Driving Resistance (Soil) / Discontinuity Data Or RQD% (Rock)	Percent Natural Moisture	Material Description (SOIL: Soil Name, USCS, Color, Plasticity, Moisture, Consistency/Relative Density, Texture, Cementation, Structure, Origin. ROCK: Rock Name, Color, Weathering, Hardness, Discontinuity Spacing, Joint Filling, Core Recovery, Formation Name.)	Unit Description	Graphic Log	Drilling Methods, Size and Remarks	Water Level/ Date	Backfill/ Instrumentation
0					(0.0) Final Log 7/31/10	**0.0 - 0.5 AC; (AC)**		Sta."L"1158+98.6, -14.8		
						0.5 - 2.0 Base Rock; (Base Rock)		Drilling method 4" ID HS (0'-30')		
						2.0 - 13.0 Calapooya Unit-1 Gravelly SAND with some silt to Sandy SILT with some clay , SP, ML; brown, brown-gray and dark gray, low plasticity, damp, medium dense and medium stiff, fine to medium grained sand; (Fill)				
5	N1	53	3-7-6		N- 1 (5.0-6.5) Gravelly SAND with some silt, SP; brown-gray, low plasticity, damp, medium dense, fine to medium grained. (Fill)					
10	N2	47	1-2-5		N- 2 (10.0-11.5) Sandy SILT with some clay, ML; brown to dark gray, low plasticity, damp, medium stiff. (Fill)					
						13.0 - 28.5 Calapooya Unit-2 Sandy CLAY with some silt, CL to SILT with some clay and sand, ML to Silty SAND with some clay and gravel, SM; brown, dark brown, gray, dark gray, orange-brown, mottled, low to medium plasticity, moist to wet, medium stiff to stiff; (Alluvium)				
15	N3	80	1-4-6	23	N- 3 (15.0-16.5) Sandy CLAY with some silt, CL; dark brown to dark gray, low to medium plasticity, moist, stiff. (Alluvium) Lab No 10-001069, LL=40, PI=15.					
20	N4	57	2-3-4	28	N- 4 (20.0-21.5) SILT with some clay and sand, ML; dark brown to dark gray, mottled, low plasticity, moist, medium stiff. (Alluvium) Lab No. 10-001070, LL=41, PI=14.				9/28/07 ▽ 24'	
25										

Depth (ft)	Test Type, No.	Percent Recovery	Driving Resistance / Discontinuity Data Or RQD% (Soil / Rock)	Percent Natural Moisture	Material Description (SOIL: Soil Name, USCS, Color, Plasticity, Moisture, Consistency/Relative Density, Texture, Cementation, Structure, Origin. ROCK: Rock Name, Color, Weathering, Hardness, Discontinuity Spacing, Joint Filling, Core Recovery, Formation Name.)	Unit Description	Graphic Log	Drilling Methods, Size and Remarks / Water Level/ Date	Backfill/ Instrumentation
25	N5	87	3-6-7	18	N- 5 (25.0-26.5) Silty SAND with some clay and gravel, SM; brown, gray, orange-brown, medium plasticity, wet, stiff. (Alluvium) Lab No. 10-001071, LL=45, PI=17.				
						28.5 - 45.7 Calapooya Unit-6 MUDSTONE, gray, fresh, extremely soft to very soft, very close to close jointing, thin bedded, fissile along bedding; (Tenmile Formation)		← Bedrock Contact 28.5'	
30	N6	23	50/3"		N- 6 (30.0-30.4) MUDSTONE, gray, fresh, extremely soft. (Tenmile Formation)			Drilling method changed to HQ3 WL (29.5'-56')	
	C1	100	R0 RQD = 67		C- 1 (30.4-31.7) MUDSTONE, gray, fresh, extremely soft, very close to close jointing. (Tenmile Formation)				
	C2	100	R0 RQD = 68		C- 2 (31.7-36.7) MUDSTONE, gray, fresh, extremely soft, very close to close jointing, fissile along bedding. (Tenmile Formation)			WR WC gray-brown	
35									
	C3	100	R0-R1 RQD = 32		C- 3 (36.7-41.7) MUDSTONE, gray, fresh, extremely soft to very soft, very close to close jointing, fissile along bedding. (Tenmile Formation)				
40									
	C4	100	R0-R1 RQD = 50		C- 4 (41.7-45.7) MUDSTONE, gray, fresh, extremely soft to very soft, very close to close jointing, fissile along bedding. (Tenmile Formation)			Back filled with bentonite chips (45.7'-1') concrete (1'-0')	
45					(45.7) Bottom of hole.			Bottom of hole 45.7'	
50									
55									
60									
63									

DRILL LOG

OREGON DEPARTMENT OF TRANSPORTATION

Project **Calapooya Creek Bridge Replacement**	Purpose **Bridge Foundation**	Hole No. **14813-07**	
Highway **138W**	County **Douglas**	E.A. No. **PE001304**	
Hole Location Northing: **644,932.98**	Easting: **4,158,065.89**	Key No. **14813**	
Equipment **CME-75**	Driller **Ed Duffy**	Start Card No.	
Project Geologist **Dan Raker**	Recorder **Dan Raker**	Bridge No. **20861**	
Start Date **June 8, 2010**	End Date **June 8, 2010**	Total Depth **81.4 ft**	Ground Elev. **372.8 ft**
			Tube Height

Test Type
"A" - Advancer
"X" - Auger
"C" - Core
"N" - Standard Penetration Test
"U" - Undisturbed Sample
"D" - Oversize Split Spoon Sample

Rock Abbreviations

Discontinuity	Shape	Surface Roughness
J - Joint	Pl - Planar	P - Polished
F - Fault	C - Curved	Sl - Slickensided
B - Bedding	U - Undulating	Sm - Smooth
Fo - Foliation	St - Stepped	R - Rough
S - Shear	Ir - Irregular	VR - Very Rough

Typical Drilling Abbreviations

Drilling Methods	Drilling Remarks
WL - Wire Line	LW - Lost Water
HS - Hollow Stem Auger	WR - Water Return
DF - Drill Fluid	WC - Water Color
SA - Solid Auger	DP - Down Pressure
CA - Casing Advancer	DR - Drill Rate
HA - Hand Auger	DA - Drill Action

Depth (ft)	Test Type, No.	Percent Recovery	Driving Resistance (Soil) / Discontinuity Data Or RQD% (Rock)	Percent Natural Moisture	Material Description (SOIL: Soil Name, USCS, Color, Plasticity, Moisture, Consistency/Relative Density, Texture, Cementation, Structure, Origin. ROCK: Rock Name, Color, Weathering, Hardness, Discontinuity Spacing, Joint Filling, Core Recovery, Formation Name.)	Unit Description	Graphic Log	Drilling Methods, Size and Remarks	Water Level/ Date	Backfill/ Instrumentation
0	N1	20	3-1-1		(0.0) Final Log 7-31-10 N-1 (0.0-1.5) SAND with some gravel trace silt, SP, brown, nonplastic, wet, very loose, fine to coarse grained.	**0.0 - 6.2 Calapooya Unit-5 SAND with some gravel trace silt, SP, to Sandy GRAVEL with some silt, trace clay, GP brown to gray-brown, nonplastic to low plasticity, wet, very loose to loose, fine to coarse grained sand, fine rounded gravel.; (Alluvium)**		Sta."L"1156+55.2, +7.3 23.7 feet from Deck to Ground Surface below.		
5	N2	10	1-2-16		N-2 (4.8-6.2) From (4.8'-6.0') Heaving SAND From (6.0'-6.2') Sandy GRAVEL with some silt, trace clay, GP, gray-brown, nonplastic to low plasticity, wet, loose, fine grained, rounded. Alluvium From (6.2'-6.4') MUDSTONE, gray, fresh. very soft. (Tenmile Formation)			Driller notes harder at 5 feet. Bedrock contact 6.2'	6/8/10 7'	
	C1	94	R1 RQD = 50		C-1 (6.4-11.4) MUDSTONE, gray, fresh, very soft, close jointing, medium to thick bedded. (Tenmile Formatiom) Lab No. 10-001831 (6.8'-7.4') Unconfined Compressive Strength (UCS)=598 psi. Lab No. 10-001832 (10.8'-11.4') UCS=231 psi.	**6.2 - 81.4 Calapooya Unit-6 MUDSTONE, gray, decomposed to mainly fresh, extremely soft to mainly very soft, very close to wide jointing, some shearing with slickensides along joints, medium to thick bedded; (Tenmile Formation)**				
10	C2	100	R1 RQD = 40		C-2 (11.4-16.4) MUDSTONE, gray, fresh, very soft, close jointing, medium to thick bedded. (Tenmile Formation) Lab No. 10-001833 (11.4'-12.3') UCS=602 psi.			Shear zone 13.1' to 13.3'		
15	C3	100	R1 RQD = 100		C-3 (16.4-21.4) MUDSTONE, gray, fresh, very soft, wide jointing, medium to thick bedded, full stick, no fractures. (Tenmile Formation) Lab No. 10-001834 (17.3'-18.0') UCS=619 psi. Lab No. 10-001835 (18.4'-19.1') UCS=358 psi.					
20	C4	100	R1 RQD = 92		C-4 (21.4-26.4) MUDSTONE, gray, fresh, very soft, close to moderately close jointing, medium to thick bedded. (Tenmile Formation)					
25										

Depth (ft)	Test Type, No.	Percent Recovery	Driving Resistance / Discontinuity Data Or RQD% (Soil / Rock)	Percent Natural Moisture	Material Description SOIL: Soil Name, USCS, Color, Plasticity, Moisture, Consistency/Relative Density, Texture, Cementation, Structure, Origin. ROCK: Rock Name, Color, Weathering, Hardness, Discontinuity Spacing, Joint Filling, Core Recovery, Formation Name.	Unit Description	Graphic Log	Drilling Methods, Size and Remarks / Water Level/ Date	Backfill/ Instrumentation
25	C5	100	R0-R1 RQD = 0	35	C- 5 (26.4-31.4) MUDSTONE, with clay seams, gray, fresh to decomposed at clay seams, extremely soft to very soft, very close jointing, highly fractured, some slickensides. From (26.5'-28.5') CLAY, CH; gray, medium plasticity, moist, medium stiff to stiff. Lab No. 10-001830 (26.8'-27') LL=50, PI=28.			Clay seam 26.5' to 28.5' Torvane = 0.60 and 0.71 TSF at 26.8' Torvane = 0.36 and 0.43 TSF at 27.5'	
30	C6	92	R1 RQD = 48		C- 6 (31.4-36.4) From (31.5'-33.3') MUDSTONE, gray, fresh to moderately weathered, very soft, very close jointing, some shearing with slickedsides, medium to thick bedded. (Tenmile Formation) From (33.3'-36.4') MUDSTONE, gray, fresh, very soft, moderately close jointing, medium to thick bedded. (Tenmile Formation) Lab No. 10-001837 (33.4'-34.1') UCS=337 psi.				
35	C7	100	R1 RQD = 80		C- 7 (36.4-41.4) MUDSTONE, gray, fresh, very soft, close to moderately close jointing with trace shearing on joints, medium to thick bedded, concretions at 37.5' and 40.2'. (Tenmile Formation) Lab No. 10-001838 (38.4'-39.1') UCS=619 psi.				
40	C8	100	R1 RQD = 50		C- 8 (41.4-46.4) MUDSTONE, gray, fresh, very soft, very close to close jointing, slickensides along joints, medium to thick bedded, concretion at 42.6. (Tenmile Formation)				
45	C9	98	R1 RQD = 26		C- 9 (46.4-51.4) MUDSTONE, gray, fresh, very soft, very close to close jointing, slickensides along joints, medium to thick bedded, concretion at 49.0'. (Tenmile Formation)				
50	C10	96	R1 RQD = 70		C- 10 (51.4-56.4) MUDSTONE, gray, fresh, very soft, very close to moderately close jointing, slickensides along joints, medium to thick bedded. (Tenmile Formation)				
55	C11	100	R1 RQD = 68		C- 11 (56.4-61.4) MUDSTONE, gray, fresh, very soft, very close to close jointing, slickensides along joints, medium to thick bedded. (Tenmile Formation)				
60	C12	96	R0-R1 RQD = 50		C- 12 (61.4-66.4) MUDSTONE, gray, fresh, extremely soft to very soft, very close to moderately close jointing,				
63									

Depth (ft)	Test Type, No.	Percent Recovery	Soil / Rock: Driving Resistance / Discontinuity Data Or RQD%	Percent Natural Moisture	Material Description (SOIL: Soil Name, USCS, Color, Plasticity, Moisture, Consistency/Relative Density, Texture, Cementation, Structure, Origin. ROCK: Rock Name, Color, Weathering, Hardness, Discontinuity Spacing, Joint Filling, Core Recovery, Formation Name.)	Unit Description	Graphic Log	Drilling Methods, Size and Remarks	Water Level/ Date	Backfill/ Instrumentation
63					slickensides along joints, medium to thick bedded. Extremely soft zone 64.8'-65.3', highly fractured zones 61.8'-62.1' and 64.3'-64.5'. (Tenmile Formation) Lab No. 10-001843 (63.0'-63.9') UCS=247 psi.					
65										
	C13	100	R1 RQD = 40		C- 13 (66.4-71.4) MUDSTONE, gray, fresh, very soft, very close to close jointing, slickensides along joints, medium to thick bedded. Very close jointing zones 70.2'-71.1' and 69.6'-69.8'. (Tenmile Formation)					
70										
	C14	100	R1 RQD = 90		C- 14 (71.4-76.4) MUDSTONE, gray, fresh, very soft, very close to close jointing, slickensides along joints, medium to thick bedded. Highly fractured zone 71.4'-71.7'. (Tenmile Formation) Lab No. 10-001845 (71.6'-72.3') UCS=670 psi. Lab No. 10-001846 (75.5'-76.4') UCS=622 psi.					
75										
	C15	100	R1 RQD = 50		C- 15 (76.4-81.4) MUDSTONE, gray, fresh, very soft, very close to close jointing, slickensides along joints, medium to thick bedded. Highly fractured zone 78.1'-78.4'. (Tenmile Formation) Lab No. 10-001847 (77.3'-77.9') UCS=621 psi. Lab No. 10-001848 (80.5'-81.0') UCS=986 psi.			Backfilled with granular bentonite (81.4'-0')		
80										
					(81.4) Bottom of hole.			Bottom of hole 81.4'		
85										
90										
95										
100										

LABORATORY TEST RESULTS

Location			Index Testing											
Boring			Soil/Rock Classification			Natural	Atterburg Limits		P - 200	Dry Unit Wt.		Max. Compressive	Resistivity	pH
Hole #	Sample #	Depth (ft)	Description	Unit	USCS	Moisture (%)	LL (%)	PI (%)	(%)	γ_w(lb/ft³)	E_{50}(%strain)	Strength (psi)	Ω	
14813-01	N-1	5.0-6.5	CLAY	Calapooya Unit 2	CH	24.0	66	35	98.2					
14813-01	N-2	10.0-11.5	Sandy SILT with some clay	Calapooya Unit 3	ML	20.0	37	12	54.2					
14813-01	N-3	15.0-16.5	Silty SAND	Calapooya Unit 4	SM	22.0	0	NP	22.9					
14813-02	N-3	15.0-16.5	CLAY	Calapooya Unit 2	CH	29.0	94	62	95.9					
14813-02	N-4	20.0-21.5	CLAY with some sand	Calapooya Unit 2	CH	27.0	50	22	75.8					
14813-02	N-5	25.0-26.5	Silty SAND	Calapooya Unit 4	SM	28.0	0	NP	34.4					
14813-03	N-1	4.2-5.7	Clayay SILT with some sand	Calapooya Unit 2	MH	22.0	50	21	79.9					
14813-03	N-2	9.2-10.7	Clayey SILT with trace sand	Calapooya Unit 2	MH	29.0	52	21	87.5					
14813-03	N-3	14.2-15.7	Silty SAND with trace clay	Calapooya Unit 4	SM	27.0	34	10	28.9					
14813-05	N-3	14.5-16.0	SILT with some clay and sand	Calapooya Unit 2	ML	23.0	39	13	74.1					
14813-05	N-4	19.5-21.0	SILT with some clay and sand	Calapooya Unit 2	ML	23.0	40	14	73.0					
14813-05	N-5	24.5-26.0	Silty SAND with trace gravel	Calapooya Unit 3	SM	18.0	0	NP	31.4					
14813-06	N-3	15.0-16.5	Sandy CLAY with some silt	Calapooya Unit 2	CL	23.0	40	15	67.2					
14813-06	N-4	20.0-21.5	SILT with some clay and sand	Calapooya Unit 2	ML	28.0	41	14	80.9					
14813-06	N-5	25.0-26.5	Silty SAND with some clay and gravel	Calapooya Unit 2	SM	18.0	45	17	39.2					
14813-07	C-5	26.8-27	CLAY	Calapooya Unit 6	CH	35.0	50	28	96.6					

PLASTICITY CHART

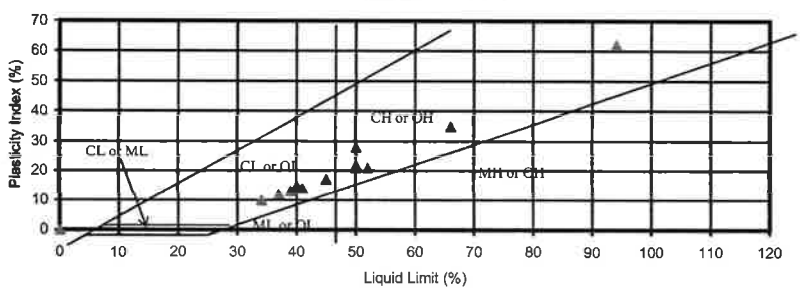

Laboratory Test Results (Soil)

Hwy: 138W: Calapooya Cr. Bridge No. 20861 **M.P. 22.10**
Key # 14813 **Date: 8/2/09**

Oregon Department of Transportation

LABORATORY TEST RESULTS

Location			Index Testing											
Boring			Soil/Rock Classification			Natural	Atterburg Limits		P - 200	Dry Unit Wt.		Max. Compressive	Resistivity	pH
Hole #	Sample #	Depth (ft)	Description	Unit	USCS	Moisture (%)	LL (%)	PI (%)	(%)	γ_w(lb/ft³)	E 50(%strain)	Strength (psi)	Ω	
14813-03	C-3	26.1-26.5	Mudstone - No Data, Sample fell apart	Calapooya Unit 6										
14813-03	C-4	31.2-31.9	Mudstone - No Data, Sample fell apart	Calapooya Unit 6										
14813-03	C-5	42.3-42.7	Mudstone - No Data, Sample fell apart	Calapooya Unit 6										
14813-04	C-3	15.3-15.8	Mudstone - No Data, Sample fell apart	Calapooya Unit 6										
14813-04	C-3	16.8-17.5	Mudstone - No Data, Sample fell apart	Calapooya Unit 6										
14813-07	C-1	6.8-7.4	Mudstone	Calapooya Unit 6		7.8				139.8	0.79	598		
14813-07	C-1	10.8-11.4	Mudstone	Calapooya Unit 6		N/R				N/R	0.65	231		
14813-07	C-2	11.4-12.3	Mudstone	Calapooya Unit 6		7.7				140.6	0.41	602		
14813-07	C-3	17.3-18.0	Mudstone	Calapooya Unit 6		N/R				N/R	0.45	619		
14813-07	C-3	18.4-19.1	Mudstone	Calapooya Unit 6		7.6				139.6	0.21	358		
14813-07	C-5	26.8-27.0	Mudstone/Clay Seam	Calapooya Unit 6	CH	35.0	50	28	96.6					
14813-07	C-6	33.4-34.1	Mudstone	Calapooya Unit 6		N/R				N/R	0.19	337		
14813-07	C-7	38.4-39.1	Mudstone	Calapooya Unit 6		8.1				139.7	0.39	619		
14813-07	C-12	63.0-63.9	Mudstone	Calapooya Unit 6		8.0				138.9	0.28	247		
14813-07	C-14	71.6-72.3	Mudstone	Calapooya Unit 6		N/R				N/R	0.58	670		
14813-07	C-14	75.5-76.4	Mudstone	Calapooya Unit 6		8.1				139.8	0.23	622		
14813-07	C-15	77.3-77.9	Mudstone	Calapooya Unit 6		N/R				N/R	0.34	621		
14813-07	C=15	80.5-81.0	Mudstone	Calapooya Unit 6		7.6				140.9	0.83	986		

PLASTICITY CHART

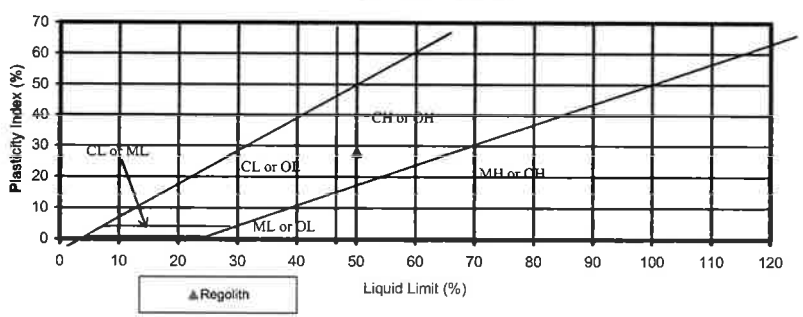

Laboratory Test Results (Core)

Hwy: 138W: Calapooya Cr. Bridge No. 20861 **M.P. 22.10**
Key # 14813 **Date: 8/2/10**

Oregon Department of Transportation

HWY 138 W Calapooya Creek

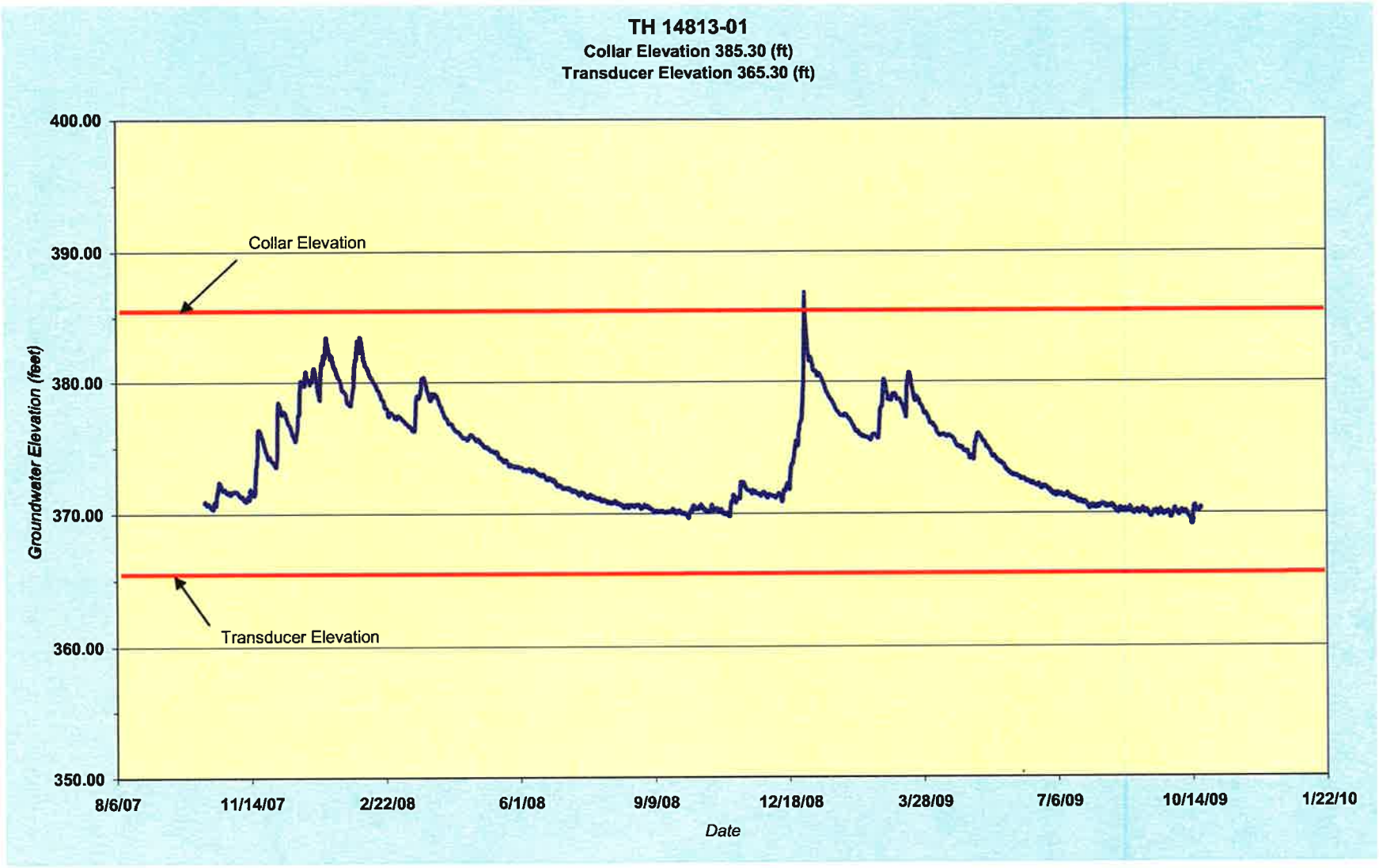

Transducer S/N 05-14291
Datalogger S/N 550
Programmed 10/10/2007

Recording Timeframe 10/10/07 - 5/16/08
Recording Interval (6 hr)
Data Downloaded 5/16/08
Printed 5/16/08

APPENDIX B GEOTECHNICAL AND FOUNDATION REPORT

OR138W: Dodge Cr/Calapooya Cr Bridge Replacements

APPENDIX C GEOTECHNICAL AND FOUNDATION REPORT

OR138W: Dodge Cr/Calapooya Cr Bridge Replacements

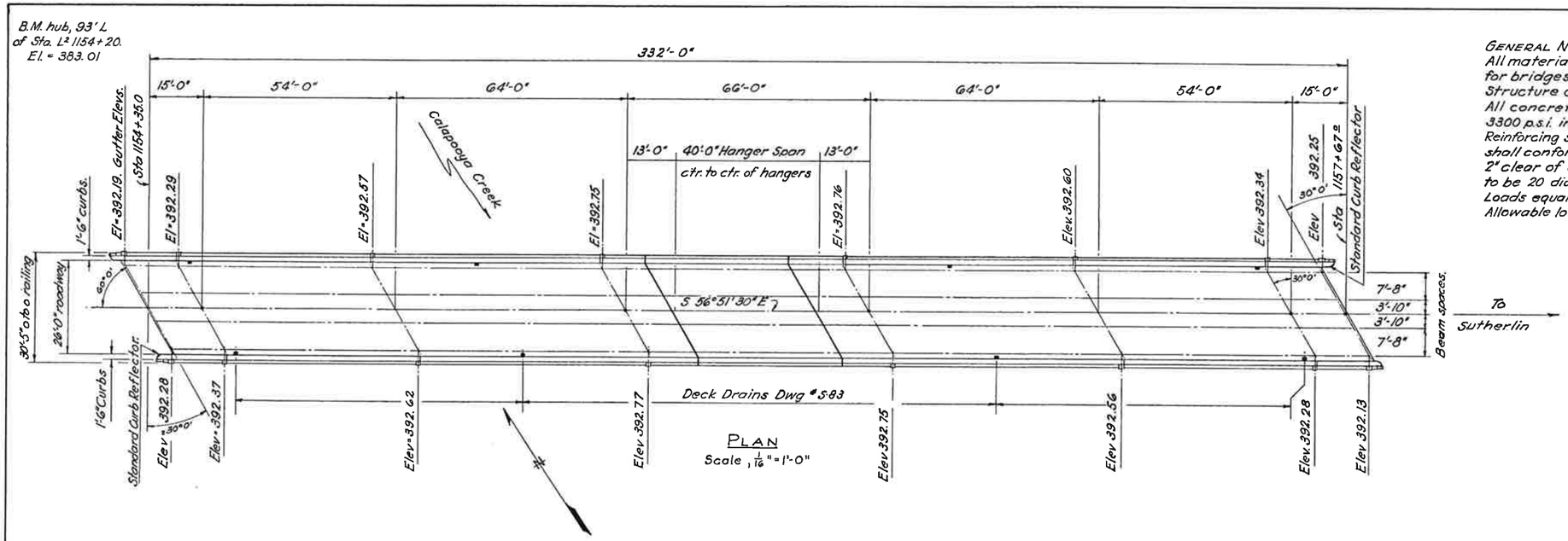

GENERAL NOTES:
All materials & workmanship shall conform to the specifications for bridges, of the Oregon State Highway Department.
Structure designed for H20-S16-44 loading.
All concrete shall be class A mix with a breaking strength of 3300 p.s.i. in 28 days. (fc = 1320 p.s.i.)
Reinforcing steel shall be intermediate grade bars and shall conform to ASTM specification A 305-49. Place bars 2" clear of concrete face unless otherwise shown. Bar splices to be 20 diams unless otherwise shown. fs = 20,000 p.s.i.
Loads equally distributed to all beams for Moments.
Allowable load on shale = 5 tons/□'.

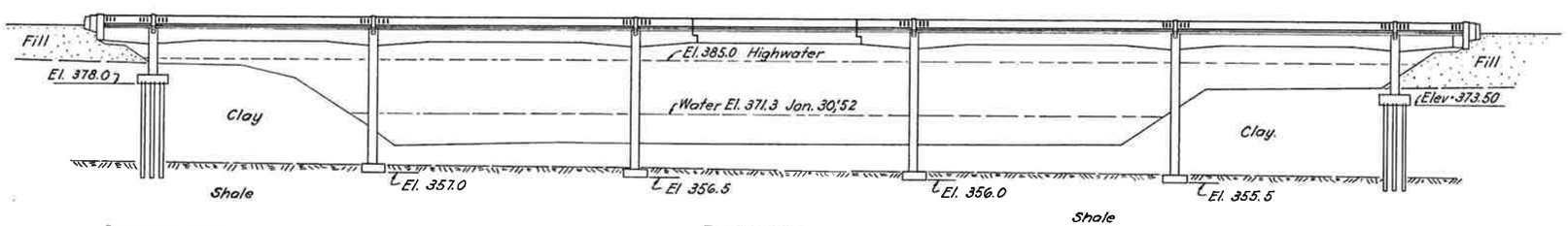

ELEVATION
Scale 1/16" = 1'-0"

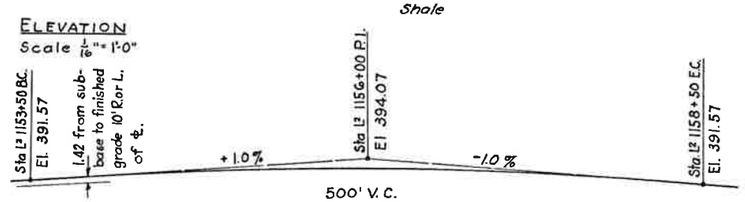

FINISHED GRADE PROFILE - 10' R. OR L. OF ℄
(Not to scale)

DESIGN DATA

Moments in kips. Note:- all columns fixed. ½ column effective per beam.

	Cant.	Haunch	54' Span	Haunch	64' Span	Haunch	Cant.
U.D.L.	0	-183.85	+171.35	-522.65	+179.65	-549.00	0
C.D.L.	0	- 5.00	+ 22.00	- 40.50	+ 10.40	- 43.00	0
C.L.L.	0	-381.26	+518.79	-723.78	+543.49	-566.13	0
Total.	0	-570.11	+712.14	-1286.93	+733.54	-1,158.73	0

*ULL + 2 concentrated Moment Loads.

40' Hanger Span.
+ 280.00
+ 15.00
+ 360.52
+ 655.52

Shear in kips

U.D.L	-18.90	+31.60	- 44.00	+ 44.40	- 45.20	+46.20
C.D.L.	- 4.07	2.50	- 3.90	+ 3.30	- 3.26	+ 4.71
C.L.L.	-27.04	+ 50.28	- 50.00	+ 54.12	- 52.40	+46.65
Totals	-50.01	+ 84.38	- 97.90	+101.82	-100.86	+97.56
Reaction	107.85		148.04		151.17	

+28.00	-28.00
+ 2.50	- 2.50
+46.65	- 46.65
+77.15	- 77.15
77.15	77.15

Approved:
Bridge Engineer

FOR INFORMATION ONLY

OREGON
STATE HIGHWAY COMMISSION

CALAPOOYA CREEK BRIDGE

CALAPOOYA CREEK — SUTHERLIN SECTION
ELKTON-SUTHERLIN HWY — DOUGLAS COUNTY
PLAN AND ELEVATION

SCALE AS NOTED | DRAWN BY C.A.J. | SHEET 1 OF 7
JUNE 24, 1952 | TRACED BY F.H.M. | BRIDGE NO. 7338
CALC BK NO. 303 | CHECKED BY | DRAWING NO 10392
ACCOMPANIED BY DRWGS 10393-94-95-96-97 & S-83

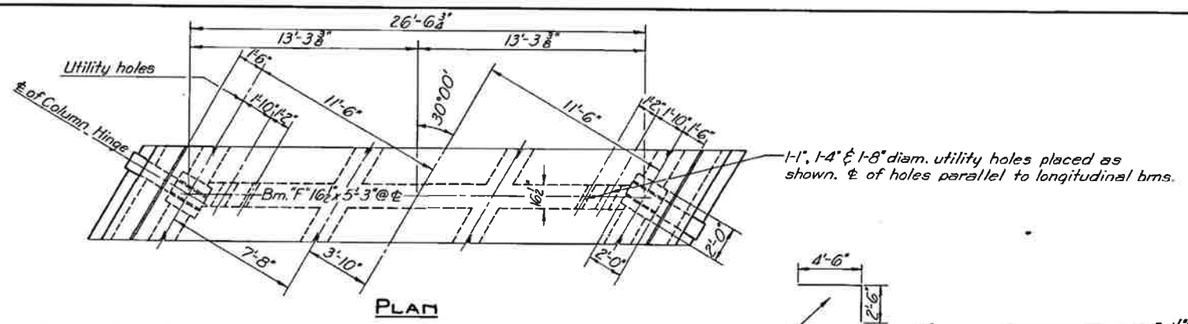

PLAN

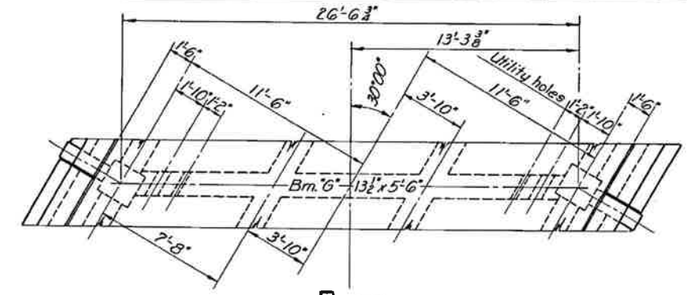

PLAN

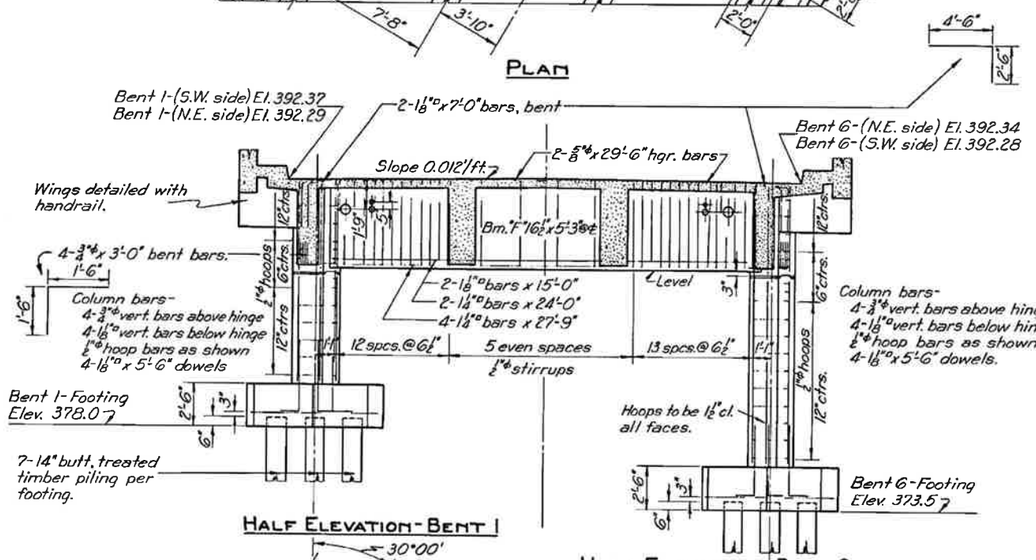

HALF ELEVATION-BENT 1

HALF ELEVATION-BENT 6

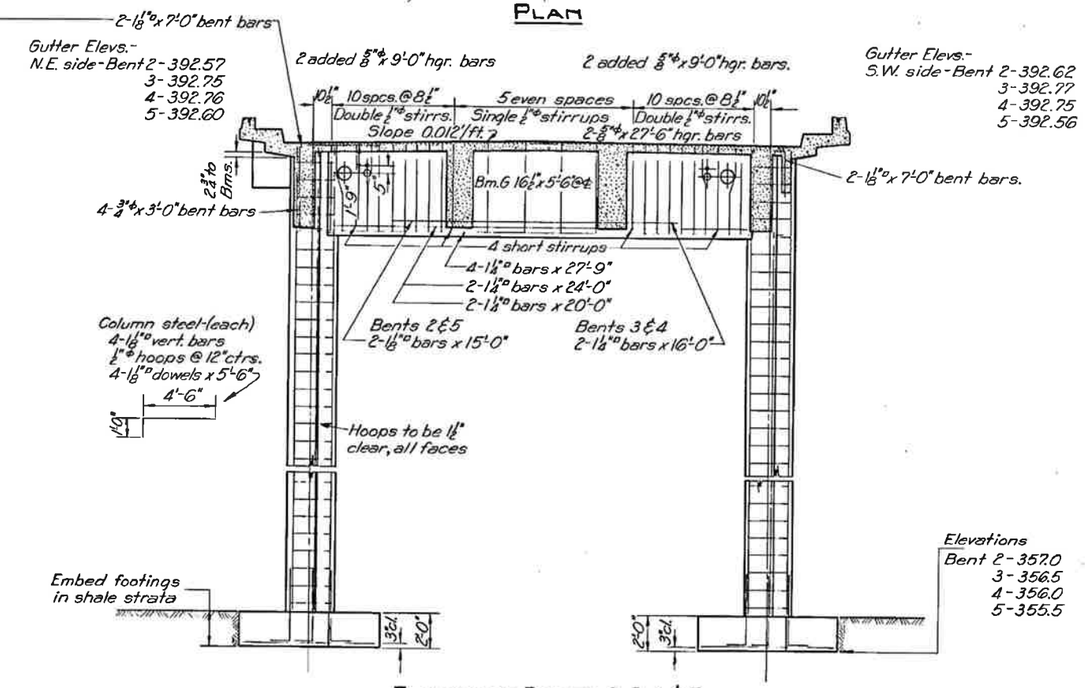

ELEVATION-BENTS 2,3,4 & 5
Scale-1/4"=1'-0"

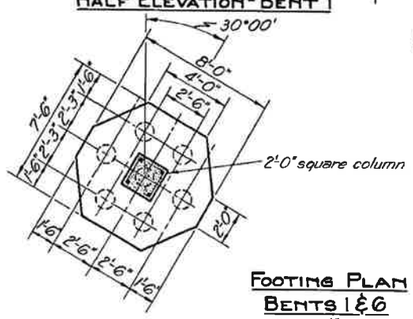

FOOTING PLAN
BENTS 1 & 6
Scale-1/4"=1'-0"

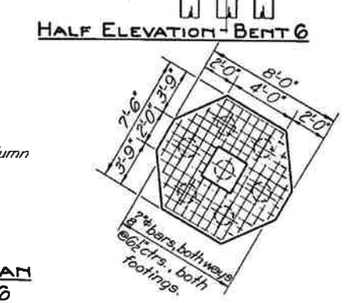

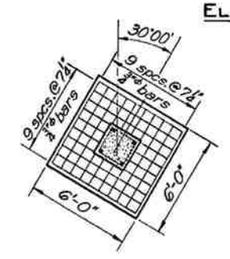

FOOTING PLAN
BENTS 2,3,4 & 5
Scale-1/4"=1'-0"

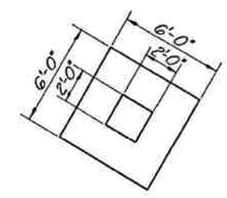

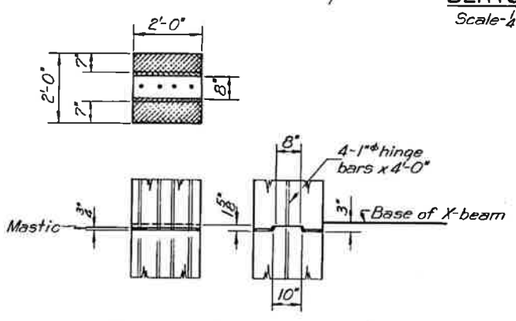

COLUMN HINGE-BENTS 1 & 6
Scale-1/2"=1'-0"

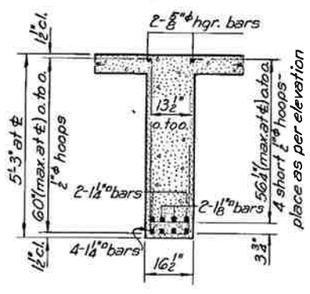

BM. "F" - 16 1/2" x 5'-3"
Scale-1/2"=1'-0"

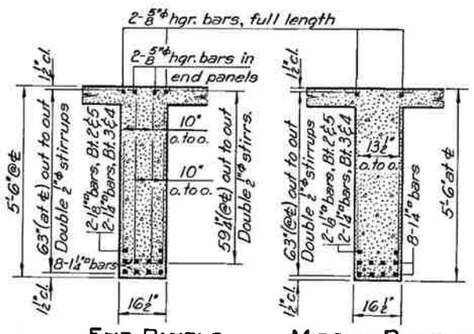

END PANELS MIDDLE PANEL
BEAM "G"
Scale-1/2"=1'-0"

FOR INFORMATION ONLY

OREGON
STATE HIGHWAY COMMISSION

CALAPOOYA CREEK BRIDGE
GENERAL BENT DETAILS

Approved:

Bridge Engineer

SCALE AS NOTED
JUNE 25, 1952
CHECKED BY

DRAWN BY C.A.J.
TRACED BY C.O.F.

SHEET 5 OF 7
BRIDGE NO. 7338
DRAWING NO. 10396

APPENDIX D GEOTECHNICAL AND FOUNDATION REPORT

OR138W: Dodge Cr/Calapooya Cr Bridge Replacements

USGS Data	2002	Latitude:	43.41
		Longitude:	-123.38

		PGA	Ss	S1
Rtn Perio	500	0.1362	0.3193	0.1481
		Fpga	Fa	Fv
Site Class	C	1.2	1.2	1.65
	Seismic Zone	As (FpgaPGA	Sds (Fa*Ss)	Sd (Fv*S1)
	B	0.1634	0.3832	0.2444

T (sec)	Sa (g)
0.00	0.1634
0.13	0.3832
0.20	0.3832
0.40	0.3832
0.60	0.3832
0.64	0.3832
0.80	0.3055
1.00	0.2444
1.20	0.2037
1.40	0.1746
1.60	0.1527
1.80	0.1358
2.00	0.1222
2.20	0.1111
2.40	0.1018
2.60	0.094
2.80	0.0873
3.00	0.0815
3.20	0.0764
3.40	0.0719
3.60	0.0679
3.80	0.0643
4.00	0.0611

Design Response Spectrum

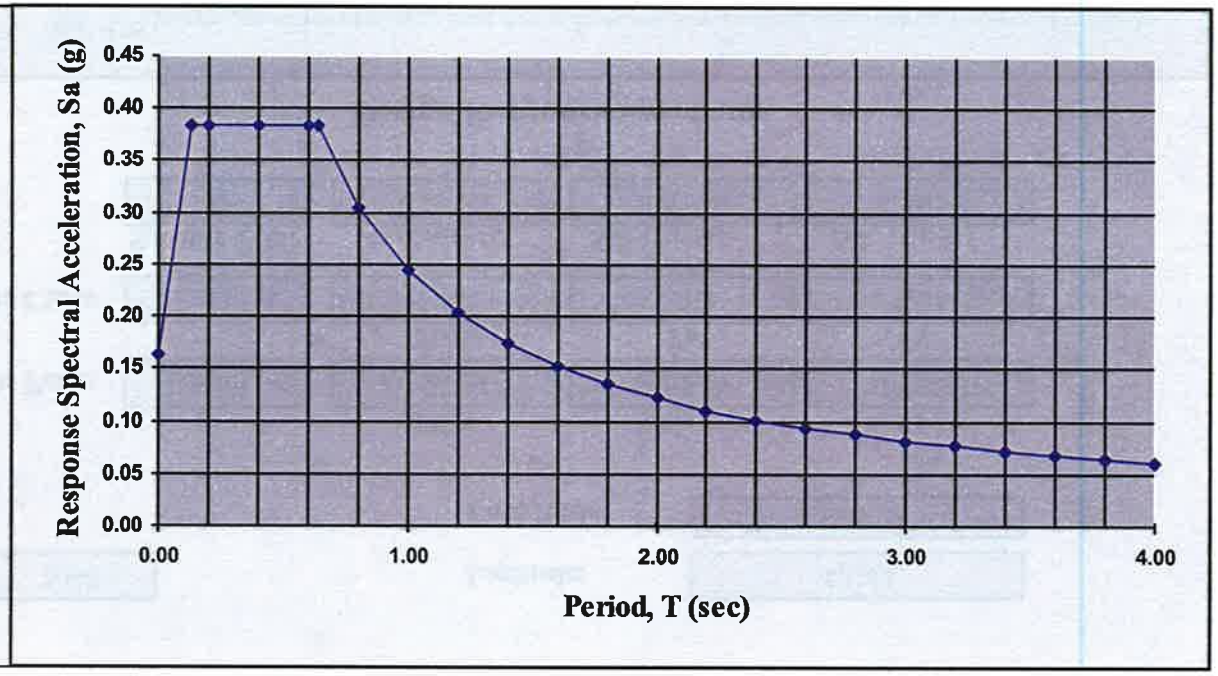

USGS Data	2002	Latitude:	43.41
		Longitude:	-123.38

		PGA	Ss	S1
Rtn Perio	1000	0.2334	0.5525	0.2633
		Fpga	Fa	Fv
Site Class	C	1.17	1.18	1.54
	Seismic Zone	As (FpgaPGA	Sds (Fa*Ss)	Sd (Fv*S1)
	C	0.2731	0.6519	0.4055

Design Response Spectrum

T (sec)	Sa (g)
0.00	0.2731
0.12	0.6519
0.20	0.6519
0.40	0.6519
0.60	0.6519
0.62	0.6519
0.80	0.5069
1.00	0.4055
1.20	0.3379
1.40	0.2896
1.60	0.2534
1.80	0.2253
2.00	0.2028
2.20	0.1843
2.40	0.169
2.60	0.156
2.80	0.1448
3.00	0.1352
3.20	0.1267
3.40	0.1193
3.60	0.1126
3.80	0.1067
4.00	0.1014

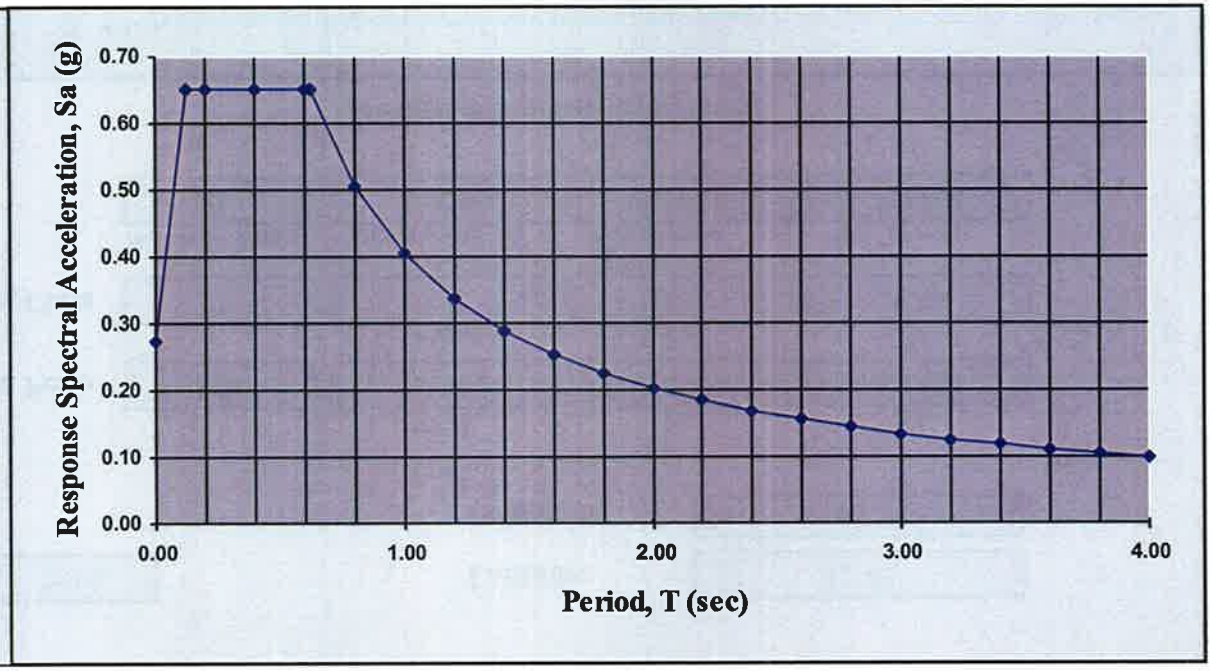

OR 138: Calapooya Cr. Bridge - Lateral Loading Soil P-y Profiles

Bridge Name: Calapooya Creek
Bridge Number: 20841
Prepared By: J. Lonie on 02Feb10, Reviewed by P. Castro Jan 2010 and updated on 06JUL10 w/ June 2010 Bent 2 drilling and rock testing data

Notes: (Notes for all bents are the same except as noted.)

1) * Ground water level of elevation 380.3 ft was used for seismic design soil unit weights below these elevations are buoyant.
Elevation 380.3 provided in the ODOT Hydraulics Report "OR 138: Calapooya Creek Bridge Elkton-Sutherlin Hwy, MP 22.1 Douglas County" by Bruce Carmichael

2) P-y Curve Criteria Soil Types
1 = Soft Clay (Matlock)
2 = Stiff Clay with Free Water (Reese)
3 = Stiff Clay w/o Free Water (Reese)
4 = Sand (Reese)
5 = Liquefiable Sand model as a 4 under static loads and as a 1 under seismic loads with appropriate inputs. C value of a liquefied sand is a residual undrained shear value.
6 = Liquefiable low to medium plasticity silt model as a 1. Use residual undrained shear strengths for seismic loading.

3) All profiles carried to rock contact.

Bent 1 - Lateral Loading, Soil P-y Parameters

Elevation (ft)	Distance below cap (in)	Soil Description	P-y Curve Criteria	Liquefaction Potential Soil 5 & 6 Seismic Event 500 yr	1000 yr	c Soils 1,2,3,6 (psf)	c Soils 1,2,3,6 (psi)	Residual c Soils 5,6 (psf)	Residual c Soils 5,6 (psi)	ϕ Soil 4,5 (deg)	ε_{50} Soils 1,2,3,6	Residual ε_{50} Soils 5,6	K Soils 2, 4, 5 (pci)	Cyclic K Soil 2 (pci)	Effective Unit Weight (pcf)
387.3	0.00	Bottom of Pile Cap													
380.3	-84.00	Unit 2	1	No	No	1200	8.33				0.008				0.061
		GWT													
373.5	-165.60	Unit 2	1	No	No	400	2.78				0.02				0.022
367.7	-235.20	Unit 4	4	No	No					27			16		0.028
366.3	-252.00	Unit 5	4	No	No					30			29		0.028
340.7	-559.20	Unit 6 Termination of Hole	2	No	No	32400	225.00				0.003		2500	1000	0.051

Bent 2 - Lateral Loading, Soil P-y Parameters

Elevation (ft)	Distance below ground (in)	Soil Description	P-y Curve Criteria	Liquefaction Potential Soil 5 & 6 Seismic Event 500 yr	1000 yr	c Soils 1,2,3,6 (psf)	c Soils 1,2,3,6 (psi)	Residual c Soils 5,6 (psf)	Residual c Soils 5,6 (psi)	ϕ Soil 4,5 (deg)	ε_{50} Soils 1,2,3,6	Residual ε_{50} Soils 5,6	K Soils 2, 4, 5 (pci)	Cyclic K Soil 2 (pci)	Effective Unit Weight (pci)
372.9	0.00	Below GWT													
367.9	-60.00	Unit 5	5	Yes	Yes			20	0.139	29		0.02	24		0.028
291.5	-976.80	Unit 6 Termination of Hole	2	No	No	32400	225.00				0.003		2500	1000	0.051

Bent 3 - Lateral Loading, Soil P-y Parameters

Elevation (ft)	Distance below cap (in)	Soil Description	P-y Curve Criteria	Liquefaction Potential Soil 5 & 6 Seismic Event 500 yr	1000 yr	c Soils 1,2,3,6 (psf)	c Soils 1,2,3,6 (psi)	Residual c Soils 5,6 (psf)	Residual c Soils 5,6 (psi)	ϕ Soil 4,5 (deg)	ε_{50} Soils 1,2,3,6	Residual ε_{50} Soils 5,6	K Soils 2, 4, 5 (pci)	Cyclic K Soil 2 (pci)	Effective Unit Weight (pci)
387.9	0.00	Bottom of Pile Cap													
382.6	-52.80	Unit 1	1	No	No	800	5.556				0.01				0.058
380.3	-80.40	Unit 2	1	No	No	600	4.167				0.012				0.061
		GWT													
373.6	-160.80	Unit 2	1	No	No	600	4.167				0.012				0.025
371.7	-183.60	Unit 3	4	No	No					34			24		0.025
366.2	-249.60	Unit 5	4	No	No					34			60		0.028
340.6	-556.80	Unit 6 Termination of Hole	2	No	No	32400	225.00				0.003		2500	1000	0.051

Unit-1 is Sandy GRAVEL trace to some silt, cobbles and boulders, GW; to Gravelly SAND some cobbles and boulders trace silt and clay, SP; to Gravelly Clayey SILT trace to some clay cobbles and boulders, ML; to Gravelly Sandy SILT some clay cobbles and boulders, ML; to Sandy silt trace gravel, ML; to Gravelly SAND some silt, SP; to Sandy SILT, ML; brown, gray-brown gray, dark gray, nonplastic to medium plasticity, dry to moist, loose to medium dense and medium stiff to stiff, fine to medium sand, fine to coarse gravel. (Fill).

Unit-2 Clayey SILT, ML; to SILT some clay, ML; to SILT some clay trace sand, ML; to Sandy SILT some clay, ML; to Clayey SILT some sand, ML; to Sandy Clayey SILT some gravel, ML; orange-brown, brown, dark brown, some mottling, low to medium plasticity, damp to wet, soft to stiff. (Alluvium)

Unit-3 Silty SAND trace gravel and clay, SM; brown to orange-brown, nonplastic to low plasticity, moist to wet, loose to medium dense, fine to medium grained. (Alluvium)

Unit-4 SAND trace silt, SP; to SAND some silt, SP-SM; to SAND some silt trace clay, SP-SM; brown, orange-brown, gray-brown, some mottling, nonplastic to low plasticity, wet, very loose to loose, fine to medium grained has scattered zones of thin interbedded clayey silt lenses. (Alluvium)

Unit-5 Gravelly Silty SAND, SW; to GRAVEL some sand, GP; brown, dark gray, nonplastic, moist to wet, loose to medium dense, fine rounded gravel, medium to coarse sand. (Alluvium)

Unit-6 MUDSTONE, gray, slightly weathered to fresh, extremely soft to very soft, very close to moderately close jointing, laminated to thin bedded, fissile along some bedding planes, some zones hand friable, some sheared zones with slickensides. (Tenmile Formation)

APPENDIX E GEOTECHNICAL AND FOUNDATION REPORT

OR138W: Dodge Cr/Calapooya Cr Bridge Replacements

SECTION 00512 - DRILLED SHAFTS

Comply with Section 00512 of the Standard Specifications modified as follows:

00512.13 Steel Casing - Delete the sentence that begins "Use casing with an outside diameter...".

00512.18 Grout - Replace this subsection with the following subsection:

00512.18 CSL Cement Grout - Furnish non-epoxy grout or tendon grout from the QPL or furnish a pumpable CSL cement grout consisting of neat cement and water that has a water cement ratio between 0.38 and 0.45. The portland cement for the pumpable CSL cement grout shall meet the requirements of Section 02010.

00512.43(c) Temporary Casing - In the paragraph that begins "Where the acceleration coefficient...", replace the words "acceleration coefficient" with the words "peak horizontal ground acceleration coefficient for the 1,000 year return period" and replace the value "0.10" with "0.16 g (acceleration due to gravity)".

Add the following subsection:

00512.44 Permanent Casing - Furnish and install permanent casing as follows:

Bridge Number	Bent Number	Casing Size	Elevation for Top of Casing (Feet)	Elevation for Bottom of Casing (Feet)
20861	2	8'-0"	372.07	364.40

Perform welding of all permanent casing according to AWS D1.1. Test all full penetration welds using nondestructive methods by either radiograph or ultrasonic methods. Base nondestructive testing acceptance criteria on cyclic tension loading.

After concrete placement, fill all void space between the casing and the shaft excavation with a material that approximates the geotechnical properties of the in-situ materials.

00512.45(d) Concrete Cover - Replace this subsection, except for the subsection number and title, with the following:

Maintain the required concrete cover shown by placing concentric spacer bars or other approved devices around the reinforcing cage. Place spacing devices on minimum 10 foot vertical spacings the full length of the shaft. At each 10 foot level, place spacers on a minimum 30 inch circumferential spacing with at least three spaces per level. Do not use wood spacers or concrete dobies. Provide details of the proposed centering method on the shop drawings submitted according to 00512.40.

00512.48(a) Crosshole Sonic Log Testing - Add the following to the end of this subsection:

For drilled shafts constructed using non-contact splice methods, perform CSL testing after the initial pour to the bottom of the splice region and prior to placement of the column reinforcement and pouring of the splice region.

00512.80(d) Drilled Shaft Concrete - Add the following at the end of the paragraph:

The estimated quantity of drilled shaft concrete is:

Structure	Class	Quantity (Cubic Yard)
20861	4000	93

00512.80(e) Drilled Shaft Reinforcement - Add the following at the end of the paragraph:

The estimated quantity of drilled shaft reinforcement is:

Structure	Quantity Uncoated (Pound)
20861	10520

00512.80(f) Crosshole Sonic Log Equipment Mobilization - Delete this subsection.

00512.80(h) Crosshole Sonic Log Tests - Replace the sentence that begins "No separate measurement..." with the following sentence:

No separate measurement will be made for CSL equipment and operating personnel or for CSL tests performed at the Contractor's option.

00512.90 Payment - Delete the paragraph that begins "Item (f) includes...".

Item (h) includes mobilization of all CSL testing equipment and personnel to and from the site, all CSL testing, interpretation, analysis, electronic data, and final report for each tested and accepted shaft.

SECTION 00520 - DRIVEN PILES

Comply with Section 00520 of the Standard Specifications modified as follows:

00520.11 Engineer's Estimated Length List - Add the following to the end of this subsection:

The Engineer's estimated lengths of steel piling are:

Location	No.	Length (Feet)	Kind
Bridge 20861 – Bent 1	8	40	HP12x84
Bridge 20861 – Bent 3	6	40	HP12x84
Bridge 21162 – Bent 1	6	30	HP14x89
Bridge 21162 – Bent 2	6	35	HP14x89
Bridge 21163 – Bent 1	8	30	HP12x84
Bridge 21163 – Bent 2	8	25	HP12x84

00520.20(d-3) Wave Equation Method - Add the following paragraph and table(s) at the end of this subsection:

The input values for the wave equation analyses are:

Bridge-Bent	Pile Type	Pile Length * (Feet)	Quake (Inches)		Damping (sec./ft.)		% skin (ITYS)	R_n (kips)
			Skin	Toe	Skin	Toe		
20861 - Bent 1	HP12x84	40	0.10	0.10	0.05	0.15	98	890
20861 - Bent 3	HP12x84	40	0.10	0.10	0.05	0.15	98	890
21162 – Bent 1	HP14x89	30	0.10	0.10	0.05	0.15	14	940
21162 – Bent 2	HP14x89	35	0.10	0.10	0.05	0.15	12	940
21163 – Bent 1	HP12x84	30	0.10	0.10	0.05	0.15	7	890
21163 – Bent 2	HP12x84	25	0.10	0.10	0.05	0.15	5	890

* For Wave Equation analyses proposes only these pile lengths are based on the top of the pile being approximately 5 above the finished cutoff elevation. All additional pile length above that elevation, that may be required to accommodate the Contractors pile installation method or site conditions, shall be added to the lengths listed above and appropriate changes made to the skin friction distribution input listed below.

For Bridges 21162 and 21163 use a triangular skin friction distribution.

OR138W: Dodge Cr/Calapooya Cr Bridge Replacements
Grading, Paving & Structures

For Bridge 20861 use the relative skin friction distribution values listed below in the WEAP analysis:

Bent 1		Bent 3	
Depth* (Feet)	Relative Distribution	Depth* (Feet)	Relative Distribution
2.0	0.0	2.0	0.0
11.3	1.2	6.4	1.4
16.3	0.4	7.4	1.4
18.8	0.2	12.4	0.6
24.6	0.2	15.4	0.7
25.8	0.7	17.3	0.7
26.0	32.4	17.4	0.8
36.6	32.4	22.4	0.8
		22.8	32.4
		33.4	32.4

* Depths are depth below finished cutoff elevation; assume approximately 4 to 7 ft. stick up above this level.

INSERT TAB

Special Provisions

CONTRACT AND BONDS
FOR HIGHWAY CONSTRUCTION

OREGON DEPARTMENT OF TRANSPORTATION
SALEM, OREGON

GRADING, PAVING & STRUCTURES

OR138W: DODGE CR/CALAPOOYA CR BRIDGE REPLACEMENTS

ELKTON-SUTHERLIN HIGHWAY

DOUGLAS COUNTY

CONTRACT NUMBER 14292

EXPENDITURE ACCOUNT NUMBER CON03018

CLASS OF PROJECT X-BRS-S231(011)

CONTRACTOR _____

DATE OF AWARD _____

SPECIFIED COMPLETION OCTOBER 5, 2012

Key # 16796

Bid Date 11-16-10
Ad Date 10-07-10

CONTRACT AND BONDS
FOR HIGHWAY CONSTRUCTION

OREGON DEPARTMENT OF TRANSPORTATION
SALEM, OREGON

OREGON TRANSPORTATION COMMISSION

GAIL L. ACHTERMAN	Chair
MIKE NELSON	Vice Chair
MARY F. OLSON	Commissioner
ALAN BROWN	Commissioner
DAVID LOHMAN	Commissioner
MATTHEW L. GARRETT	Director of Transportation

TABLE OF CONTENTS FOR CONTRACT

		PAGE
Section I.	Special Provisions	[2]
Section II.	Schedule of Items	[4]
Section III.	Contract	[6]
Section IV.	Performance Bond	[8]
Section V.	Payment Bond	[10]
Section VI.	Certification of Workers' Compensation Coverage	[13]

DESCRIPTIONS OF PARTS OF CONTRACT WHICH ARE NOT BOUND HEREIN

(1) Standard Specifications

The "2008 Oregon Standard Specifications for Construction," Volume 1, which contain Part 00100 "General Conditions" and Volume 2, which contain Parts 00200 through 03000 "Technical Specifications" as published by the Oregon Department of Transportation.

Copies of the "2008 Oregon Standard Specifications for Construction, Volume 1 and Volume 2 may be purchased from the Oregon Department of Transportation, Procurement Office; 455 Airport Road SE, Building K; Salem, Oregon 97301-5348.

(2) Plans

Applicable Plans, either separate from the Special Provisions or included within the Special Provisions.

Copies of plans will be furnished by the Project Manager.

SECTION I. SPECIAL PROVISIONS

On the attached or inserted sheets which follow is given a description of the work to be performed under this Contract, together with required provisions, supplemental standard specifications, special provisions and instructions which supplement and modify the published "Oregon Standard Specifications for Construction," book and published "Supplemental Oregon Standard Specifications for Construction" book (if any) making them applicable to the particular work to be done.

DESCRIPTION OF WORK

Grading, Paving & Structures
OR138W: Dodge Cr/Calapooya Cr Bridge Replacements
Elkton-Sutherlin Highway
Douglas County

TIME AND PLACE OF RECEIVING BIDS

Bids for the work described above will be opened and read at the Oregon Department of Transportation, 455 Airport Road SE, Bldg. E, Salem, Oregon 97301-5348, at 9:00 a.m. on the 16th day of November, 2010.

COMPLETION TIME LIMIT

Complete all Work to be done under the Contract, except for seeding establishment andplant establishment, not later than October 5, 2012.

CLASS OF PROJECT

This is a Federal-Aid Project.

CLASS OF WORK

The Class of Work for this Project is: Bridges and Structures.

PROJECT INFORMATION

Information pertaining to this Project may be obtained from the following:

Ted Paselk, Project Manager, 3500 NW Stewart Parkway, Roseburg, 97470; Phone (541) 957-3572.

TABLE OF CONTENTS FOR SPECIAL PROVISIONS

REQUIRED CONTRACT PROVISIONS FOR FEDERAL-AID CONTRACTS (FHWA-1273)
ON-SITE WORKFORCE AFFIRMATIVE ACTION REQUIREMENTS FOR WOMEN AND MINORITIES ON FEDERAL-AID CONTRACTS
EQUAL EMPLOYMENT OPPORTUNITY PROVISIONS
DBE PROVISIONS
ASSIGNED DBE CONTRACT GOAL
PROJECT WAGE RATES
WEB SITE ADDRESSES

WORK TO BE DONE 1
SECTION 00110 - ORGANIZATION, CONVENTIONS, ABBREVIATIONS AND DEFINITIONS 2
SECTION 00120 - BIDDING REQUIREMENTS AND PROCEDURES 2
SECTION 00130 - AWARD AND EXECUTION OF CONTRACT 2
SECTION 00140 - SCOPE OF WORK 3
SECTION 00150 - CONTROL OF WORK 3
SECTION 00160 - SOURCE OF MATERIALS 5
SECTION 00165 - QUALITY OF MATERIALS 5
SECTION 00170 - LEGAL RELATIONS AND RESPONSIBILITIES 5
SECTION 00180 - PROSECUTION AND PROGRESS 8
SECTION 00190 - MEASUREMENT OF PAY QUANTITIES 10
SECTION 00195 - PAYMENT 11
SECTION 00196 - PAYMENT FOR EXTRA WORK 16
SECTION 00197 - PAYMENT FOR FORCE ACCOUNT WORK 16
SECTION 00199 - DISAGREEMENTS, PROTESTS, AND CLAIMS 16
SECTION 00210 - MOBILIZATION 17
SECTION 00220 - ACCOMMODATIONS FOR PUBLIC TRAFFIC 17
SECTION 00225 - WORK ZONE TRAFFIC CONTROL 17
SECTION 00230 - TEMPORARY DETOURS 21
SECTION 00250 - TEMPORARY BRIDGES 22
SECTION 00252 - TEMPORARY WORK BRIDGES 25
SECTION 00280 - EROSION AND SEDIMENT CONTROL 27
SECTION 00290 - ENVIRONMENTAL PROTECTION 28
SECTION 00305 - CONSTRUCTION SURVEY WORK 37
SECTION 00310 - REMOVAL OF STRUCTURES AND OBSTRUCTIONS 37
SECTION 00320 - CLEARING AND GRUBBING 38
SECTION 00330 - EARTHWORK 38
SECTION 00331 - SUBGRADE STABILIZATION 39
SECTION 00340 - WATERING 39
SECTION 00350 - GEOSYNTHETIC INSTALLATION 39
SECTION 00370 - FINISHING ROADBEDS 40
SECTION 00390 - RIPRAP PROTECTION 40
SECTION 00405 - TRENCH EXCAVATION, BEDDING, AND BACKFILL 41
SECTION 00430 - SUBSURFACE DRAINS 41
SECTION 00440 - COMMERCIAL GRADE CONCRETE 41
SECTION 00445 - SANITARY, STORM, CULVERT, SIPHON, AND IRRIGATION PIPE 41
SECTION 00460 - PAVED CULVERT END SLOPES 41
SECTION 00470 - MANHOLES, CATCH BASINS, AND INLETS 41

SECTION 00501 - BRIDGE REMOVAL 42
SECTION 00510 - STRUCTURE EXCAVATION AND BACKFILL 42
SECTION 00512 - DRILLED SHAFTS 48
SECTION 00520 - DRIVEN PILES 49
SECTION 00530 - STEEL REINFORCEMENT FOR CONCRETE 51
SECTION 00540 - STRUCTURAL CONCRETE 51
SECTION 00542 - ARCHITECTURAL TREATMENT 62
SECTION 00545 - REINFORCED CONCRETE BRIDGE END PANELS 63
SECTION 00550 - PRECAST PRESTRESSED CONCRETE MEMBERS 63
SECTION 00560 - STRUCTURAL STEEL BRIDGES 64
SECTION 00562 - ERECTING STEEL BRIDGES 65
SECTION 00582 - BRIDGE BEARINGS 68
SECTION 00583 - ELECTRICAL CONDUIT IN STRUCTURES 68
SECTION 00585 - EXPANSION JOINTS 68
SECTION 00587 - BRIDGE RAILS 69
SECTION 00591 - WATERPROOFING MEMBRANE 70
SECTION 00594 - PREPARING AND COATING METAL STRUCTURES 70
SECTION 00596 - RETAINING WALLS 70
SECTION 00620 - COLD PLANE PAVEMENT REMOVAL 72
SECTION 00641 - AGGREGATE SUBBASE, BASE, AND SHOULDERS 72
SECTION 00730 - EMULSIFIED ASPHALT TACK COAT 73
SECTION 00745 - HOT MIXED ASPHALT CONCRETE (HMAC) 73
SECTION 00749 - MISCELLANEOUS ASPHALT CONCRETE STRUCTURES 80
SECTION 00810 - METAL GUARDRAIL 80
SECTION 00820 - CONCRETE BARRIER 80
SECTION 00840 - DELINEATORS AND MILEPOST MARKER POSTS 80
SECTION 00850 - COMMON PROVISIONS FOR PAVEMENT MARKINGS 81
SECTION 00855 - PAVEMENT MARKERS 82
SECTION 00865 - LONGITUDINAL PAVEMENT MARKINGS - DURABLE 82
SECTION 00867 - TRANSVERSE PAVEMENT MARKINGS - LEGENDS AND BARS 82
SECTION 00905 - REMOVAL AND REINSTALLATION OF EXISTING SIGNS 84
SECTION 00910 - WOOD SIGN POSTS 84
SECTION 00940 - SIGNS 84
SECTION 01030 - SEEDING 85
SECTION 01040 - PLANTING 86
SECTION 01070 - MAILBOX SUPPORTS 87
SECTION 01092 - STORMWATER CONTROL FACILITIES 87
SECTION 02030 - MODIFIERS 90
SECTION 02110 - POSTS, BLOCKS, AND BRACES 90
SECTION 02320 - GEOSYNTHETICS 90
SECTION 02450 - MANHOLE AND INLET MATERIALS 92
SECTION 02560 - FASTENERS 92
SECTION 02630 - BASE AGGREGATE 93

BID SCHEDULE

SPECIAL PROVISIONS

WORK TO BE DONE

The Work to be done under this Contract consists of the following on the OR138W: Dodge Cr/Calapooya Cr Bridge Replacement Section of the Elkton-Sutherlin Highway in Douglas County:

1. Install and maintain temporary traffic control including portable temporary traffic signals.
2. Perform earthwork.
3. Construct retaining walls.
4. Construct temporary work bridge.
5. Construct temporary roadway detour.
6. Construct temporary bridge.
7. Perform cold plane pavement removal.
8. Construct aggregate base and HMAC paving.
9. Construct Bridge No. 20861
10. Construct Bridge No. 21163
11. Construct Bridge No. 21162
12. Install two tube steel rail.
13. Install Guardrail
14. Perform right of way development.
15. Install signing and striping.
16. Perform additional and incidental Work as called for by the Specifications and Plans.

APPLICABLE SPECIFICATIONS

The Specification that is applicable to the Work on this Project is the 2008 edition of the "Oregon Standard Specifications for Construction".

All number references in these Special Provisions shall be understood to refer to the Sections and subsections of the Standard Specifications and Supplemental Specifications bearing like numbers and to Sections and subsections contained in these Special Provisions in their entirety.

CLASS OF PROJECT

This is a Federal-Aid Project.

Payment

00252.90 Payment - The accepted quantities of work performed under this Section will be paid for at the Contract lump sum amount for the item "Temporary Work Bridges".

Payment will be payment in full for furnishing and placing all materials, and for furnishing all equipment, labor, and incidentals necessary to complete the work as specified.

Progress payments and retained amounts will be made according to 00195.50 except for the following:

- No payment will be made for materials on hand.
- 20 percent of the bid amount will be retained until satisfactory removal of the work bridges is done.

No separate or additional payment will be made for designing, constructing, maintaining, and removing work bridges or trestles.

SECTION 00280 - EROSION AND SEDIMENT CONTROL

Comply with Section 00280 of the Standard Specifications modified as follows:

00280.14(e) Slope and Channel Liner Matting - Add the following paragraph to the end of this subsection:

Where shown, furnish hydraulically applied bonded fiber matrix slope protection matting that consists of fully biodegradable long fiber strands held together by a water resistant bonding agent.

00280.15(a) Check Dams - Add the following bullet to the end of the bullet list:

- **Type 6: Compost Filter Sock** - Sock material, compost, and stakes meeting the following requirements:
  - **Filter Sock Material** - 8, 12, and 18 inch diameter, 5 mil thick woven tubular mesh netting consisting of continuous HDPE filament or polypropylene material with 3/8 inch openings or 100 percent biodegradable burlap or coir as shown.
  - **Compost** - Commercially manufactured coarse compost material meeting the requirements of Section 03020.
  - **Stakes** - 1 1/2 by 1 1/2 inch wooden stakes that are a minimum length equal to the diameter of the sock plus 16 inches.

00280.16(d) Inlet Protection - Add the following bullet to the end of the bullet list:

- **Compost Filter Sock** - Sock material and compost meeting the following requirements:

- **Filter Sock Material** - 8, 12, and 18 inch diameter, 5 mil thick woven tubular mesh netting consisting of continuous HDPE filament or polypropylene material with 3/8 inch openings or 100 percent biodegradable burlap or coir as shown.

- **Compost** - Commercially manufactured coarse compost material meeting the requirements of Section 03020.

00280.45(a) Check Dams - Add the following bullet to the end of the bullet list:

- **Type 6: Compost Filter Sock** - Install compost filter socks perpendicular to the water flows that are not more than 3 feet deep. Stake at intervals of 6 to 8 feet. Install stakes through the center of the filter sock and at least 1 foot into the ground with no more than 4 inches protruding above the filter sock.

00280.46(d) Inlet Protection - Add the following bullet to the end of the bullet list:

- **Type 7: Compost Filter Sock** - Install compost filter socks as shown.

00280.90 Payment - Add the following sentence to the paragraph that begins "Item (f) includes...":

It also includes the bonded fiber matrix matting application.

SECTION 00290 - ENVIRONMENTAL PROTECTION

Comply with Section 00290 of the Standard Specifications modified as follows:

00290.20(c-3) Reuse, Recycle, and Dispose of Materials - Replace the bullet that begins "Reuse demolition..." with the following bullet:

- Reuse demolition debris.

00290.20(c-3-d) Concrete and Masonry - Replace the paragraph that begins "Concrete and masonry..." with the following paragraph:
Concrete and masonry, that is not recycled and does not contain hazardous substances, may be reused to fill basements or be buried in embankments on-site, provided that the materials are broken into pieces not exceeding 15 inches in any dimension, and places so that:

00290.20(d) Hazardous Waste Management - In the paragraph that begins "In addition to current Laws...", replace the two bullets that begin "If the quantity of hazardous waste projected to be..." with the following three bullets:

- If the quantity of hazardous waste projected to be generated meets the requirements for a LQG, prepare a full Hazardous Waste Contingency Plan according to 40 CFR 265 Subpart D. Maintain a copy of the Contingency Plan on-site at all times during construction activities, readily available to employees and inspectors.

- If the quantity of hazardous waste projected to be generated meets the requirements for a SQG, prepare a modified Hazardous Waste Contingency Plan according to 40 CFR 262.34(d)(5) and 40 CFR 265 Subpart C. Maintain a copy of the modified Contingency Plan on-site at all times during construction activities, readily available to employees and inspectors.

- If the quantity of hazardous waste projected to be generated meets the requirements for a CEG, follow the contingency planning and storage requirements of the SQG unless the only potentially hazardous waste is aerosol cans smaller than 20 ounces. Limit storage to 180 days and 2,200 pounds. Prepare a modified Hazardous Waste Contingency Plan and keep a copy on-site with emergency response procedures and contact information.

00290.20(g) Spills and Releases - Replace the lead-in paragraph that begins "In the event...", with the following lead-in paragraph:

In the event of a spill or release of a hazardous substance or hazardous waste or the release of any other material that has the potential to harm human health or the environment, do the following:

00290.30(a) Pollution Control Measures - Add the following subsection and bullets:

(7) Water Quality:

- Do not discharge contaminated or sediment-laden water, including drilling fluids and waste, or water contained within a work area isolation, directly into any waters of the State or U.S. until it has been satisfactorily treated (for example: bioswale, filter, settlement pond, pumping to vegetated upland location, bio-bags, dirt-bags). Treatment shall meet the turbidity requirements below.
- Do not cause turbidity in waters of the State or U.S. greater than 10% above background reading (up to 100 feet upstream of the Project), as measured 100 feet downstream of the Project.
- During construction, monitor in-stream turbidity and inspect all erosion controls daily during the rainy season and weekly during the dry season, or more often as necessary, to ensure the erosion controls are working adequately meeting treatment requirements.
- If construction discharge water is released using an outfall or diffuser port, do not exceed velocities more than 4 feet per second, and do not exceed an aperture size of 1 inch.
- If monitoring or inspection shows that the erosion and sediment controls are ineffective, mobilize work crews immediately to make repairs, install replacements, or install additional controls as necessary.
- Underwater blasting is not allowed.
- Implement containment measures adequate to prevent pollutants or construction and demolition materials, such as waste spoils, fuel or petroleum products, concrete cured less than 24 hours, concrete cure water, silt, welding slag and grindings, concrete saw cutting by-products and sandblasting abrasives, from entering waters of the state or U.S.
- End-dumping of riprap within the waters of the state or U.S. is not allowed. Place riprap from above the bank line.

- Cease project operations under high flow conditions that may result in inundation of the project area, except for efforts to avoid or minimize resource damage.
- The Project Manager retains the authority to temporarily halt or modify the Project in case of excessive turbidity or damage to natural resources.

00290.34 Protection of Fish and Fish Habitat - Add the following paragraph:

Meet with the Agency Biologist, Resource Representative, Project Manager, and inspector on site, before moving equipment on-site or beginning any work, to ensure that all parties understand the locations of sensitive biological sites and the measures that are required to be taken to protect them.

00290.34(a) Regulated Work Areas - Add the following to the end of this subsection:

The regulated work area is the area within the ordinary high water (OHW) elevation that is shown on the plans.

- For this Project, the regulated work area will be flagged by the ODOT biologist.

- Perform work within the regulated work area only during the in-water work period. The in-water work period is from July 1st to September 30th.

Submit a schedule to complete all work within the regulated work area within the in-water work period at least 10 days prior to the preconstruction conference.

Add the following subsection:

00290.34(c) Fish Protection Measures Required by Environmental Permits:

(1) General Equipment Requirements - Use heavy equipment as follows:

- Choice of equipment must have the least adverse effects on the environment (for example: minimally sized, low ground pressure).
- Before operations begin and as often as necessary during operation, steam clean all equipment that will be used below the regulated work area until all visible oil, grease, mud, and other visible contaminants are removed. Complete all cleaning in approved staging areas.
- Secure absorbent material around all stationary power equipment (for example: generators, cranes, drilling equipment) operated within 150 feet of wetlands, waters of the State and U. S., drainage ditches, or water quality facilities to prevent leaks, unless suitable containment is provided to prevent spills from entering waters of the state and U.S.
- Do not cross directly through a stream for construction access, unless shown or approved.
- The volume of material filled or discharged into waters of the state or U.S. plus the volume excavated shall not exceed the amount identified in the permits.
- Do not apply surface fertilizer within 50 feet of any stream channel.

(2) Work Area Isolation - At least 28 Calendar Days before beginning in-water work, submit a work area isolation plan for review and approval. The Plan is required for all work within the regulated work area showing how the work area will be isolated from the

active stream flow, both upstream and downstream of the work area using temporary water management facilities (for example: inflatable bags, sandbags, sheet pilings, or similar materials), unless otherwise approved in writing by appropriate regulatory agencies through the Project Manager. Piling may be installed without work area isolation provided all other relevant conditions are met.

- The plan shall be stamped by a Professional Engineer licensed in the State of Oregon.
- Include measures to comply with these specifications, the sequencing and schedule of dewatering and re-watering activities, plan view of all isolation elements, as well as a list of materials to adequately provide appropriate redundancy of key plan functions (for example: an operational, properly sized backup generator).
- If a water withdraw pump is used, a sizing submittal is required.
- Installation and removal of work area isolation equipment, and work within the isolated work area, is allowed only during the in-water work period.
- Notify the Project Manager at least 14 Calendar Days prior to beginning of work area isolation construction. Do not begin in-stream work or work within regulated work area prior to receiving approval.
- Safe passage around or through the in-water work area must be provided for adult and juvenile native migratory fish, unless passage did not previously exist, or as otherwise approved in writing by appropriate regulatory agencies through the Project Manager.
- Coordinate fish removal by Agency or ODFW biologists prior to installing work area isolation or conducting work within the regulated work area. Provide Agency, ODFW and qualified and permitted consultant personnel access to the regulated work area to remove fish trapped within the isolated work areas, as directed.
- Maintain water flow downstream of the isolated work area at a rate of at least 50% of upstream flow conditions for the duration of the diversion. Control water flow as necessary to prevent de-watering downstream of the diversion.
- If pumps are used, operate the pumps as needed up to 24-hours a day during the diversion to prevent de-watering the stream downstream of the diversion. Keep a back up pump available in the event of failure of the primary pump.

(3) Water Intake Screening - Install, operate, and maintain fish screens on each water intake used for project construction, including pumps used to isolate an in-water work area. When drawing or pumping water from any stream, protect fish by equipping intakes with screens having a minimum 27% open area and meeting the following requirements:

- Perforated plate openings shall be 3/32 inch or smaller.
- Mesh or woven wire screen openings shall be 3/32 inch or smaller in the narrowest direction.
- Profile bar screen or wedge wire openings shall be 1/16 inch or smaller in the narrow direction.

Choose size and position of screens to meet the following criteria:

Type	Approach Velocity [1] (Ft./Sec.)	Sweeping Velocity [2] (Ft./Sec.)	Wetted Area of Screen (Sq. Ft.)	Comments

Ditch Screen	≤ 0.4	Shall exceed approach velocity	Divide max. water flow rate (cfs) by 0.4 fps	If screen is longer than 4 feet, angle 45° or less to stream flow
Screen with proven self-cleaning system	≤ 0.4	–	Divide max. water flow rate (cfs) by 0.4 fps	–
Screen with no cleaning system other than manual	≤ 0.2	–	Divide max. water flow rate (cfs) by 0.2 fps	Pump rate 1 cfs or less
[1] Velocity perpendicular to screen face at a distance of approximately 3 inches [2] Velocity parallel to screen				

Provide ditch screens with a bypass system to transport fish safely and rapidly back to the stream.

(5) Site Restoration - Restore damaged streambanks to a natural slope, pattern, and profile suitable for establishment of permanent woody vegetation unless precluded by pre-project conditions (for example: natural rock substrate):

- Replant all damaged streambanks before the first April 15 following construction.
- If use of large wood, native topsoil, or native channel material is required for the site restoration according to the roadside development plans, stockpile all large wood, native vegetation, weed-free topsoil, and native channel material displaced by construction. Cut trees or large wood and trees into pieces of no less than 20 feet in length, or as shown on the roadside development plans or as directed. Stockpiled native wood and vegetation remain the property of the Agency.
- Stabilize all disturbed soils, including obliteration of temporary access roads, following any break in work unless construction will resume in 4 Calendar Days.

(7) Hydro-Acoustic - Hollow steel piling 24 inches in diameter or smaller and H-pile designated as HP24 or smaller may be installed below the ordinary high water as follows:

- Minimize the number and diameter of pilings, as feasible.
- Repairs, upgrades, and replacement of existing pilings consistent with these conditions are allowed. In addition, up to five single pilings or one dolphin consisting of three to five pilings may be added to an existing facility.
- Whenever feasible, use vibratory hammer for piling installation. Otherwise, use the smallest drop or hydraulic impact hammer necessary to complete the job, and set the drop height to the minimum necessary to drive the piling.
- When using an impact hammer to drive or proof steel pile, one of the following sound attenuation devices must be used to reduce sound pressure levels by 20 dB.

    - Place a block of wood or other sound dampening material between the hammer and the piling being driven.

- If water velocity is 1.7 miles per hour or less, surround the piling being driven by an unconfined bubble curtain that will distribute small air bubbles around 100% of the piling perimeter for the full depth of the water column. Contract the Project Manager for guidance on how to deploy an effective, economical bubble curtain.
- If water velocity is greater than 1.7 miles per hour, surround the piling being driven by a confined bubble curtain (for example: a bubble ring surrounded by a fabric or metal sleeve) that will distribute air bubbles around 100% of the piling perimeter for the full depth of the water column.
- Written approval of an alternative sound attenuation plan may be requested to the U. S. Army Corps of Engineers through the Project Manager, provided the plan will maintain sound pressure levels below 150dB rms (1 micro Pascal) for a minimum of 50% of the driver strikes, and peak sound pressure levels below 180 dB rms (1 micro Pascal) for all strikes.

(9) Treated Wood - Do not use lumber, pilings, or other wood products that are treated or preserved with pesticidal compounds below the ordinary high water (OHW) or as part of an in-water or over-water structure, except as described below:

- During demolition of treated wood, ensure that no treated wood debris falls into the water. If treated wood debris does fall into the water, remove it immediately.
- Store removed treated wood debris in appropriate dry storage areas, at least 150 feet away from the regulated work area.

(10) Piling Removal - If a temporary or permanent piling will be removed, the following conditions apply:

- Dislodge the piling with a vibratory hammer, whenever feasible.
- Once loose, place the piling onto the construction barge or other appropriate dry storage site.
- Ensure remaining treated wood piling is broken, cut, or pushed at least 3 feet below the sediment surface and covered with a cap of clean, native substrates that match surrounding streambed materials.
- Fill holes left by each piling with clean, native sediments whenever feasible.

Add the following subsection:

00290.36(c) Prevent Nesting - Comply with Migratory Bird Treaty Act (16 U.S.C. 703-712):

- Between March 15 and August 31, the Contractor shall allow USDA personnel access to each structure for bird nest removal. The Contractor shall coordinate with USDA through the Engineer. 7 (seven) days notice will be given to the Contractor in advance of USDA personnel requiring access to the bridge.
- Remove existing bird nests only if no eggs or young are found.
- Meet with the Agency Biologist, the Engineer, and inspector on-site if nests containing eggs or young are found.

00290.41(b) Disturbing Wetlands - Add the following to the end of this subsection:

Comply with the conditions of Section 404 and Removal/Fill permits obtained for the Project. Willful violation of permit conditions and applicable laws exposes the offending Contractor and other violators to criminal and civil sanctions. Civil sanctions include, but are not limited to, the offender's sole liability for all costs associated with site restoration, maintenance and additional mitigation work required by federal or State authorities.

The Project Manager may suspend work until the Contractor, Project Manager, Agency Wetland Specialist, and other required federal and State personnel, if any, meet to determine damage to the site and the nature and scope of necessary site restoration and maintenance. The Project Manager may require the Contractor to submit a written plan for protection of other sites for the duration of the Project before work resumes.

Add the following subsection:

00290.42 Work Containment Plan and System - A work containment plan (WCP) and a work containment system (WCS) are required on this Project for bridge demolition activities.

Develop and submit a WCP for approval at least 28 Calendar Days prior to mobilization for bridge demolition activities. Maintain a copy of the WCP on the Project Site at all times during construction, readily available to employees and inspectors. Ensure that all employees comply with the provisions of the WCP. Design the WCP to avoid or minimize disturbance to protected features (property, sensitive cultural or natural resources, the Regulated Work Area, or other features identified by Agency) related to Contractor operations.

Before developing the WCP, meet with Agency to review the Contractor's activities that require a WCP and WCS and to ensure that all parties understand the locations of protected features to be avoided and the measures needed to avoid and protect them.

Notify the Project Manager at least 10 Calendar Days before beginning WCS construction activities.

The Agency reserves the right to stop work and require the Contractor to change the WCP methods and equipment before any additional Contract work, at no additional cost to the Agency, if and when, in the opinion of the Agency, that such methods jeopardize the safety of traffic, the integrity of the new structure, damage protected features, or destroy aquatic life or habitat in the Regulated Work Area.

Provide a WCP and a WCS according to the following:

(a) Work Containment Plan (WCP) - The WCP shall identify the prevention of delivery of construction debris, material or other contaminants to protected features, caused by the Contractor's construction operations including but not limited to mobilization, construction, maintenance, and demolition. Implement the WCP as approved. The WCP shall:

- Include relevant construction, operation, or demolition activities.
- Include a work area isolation plan and a work containment system to provide complete containment measures that prevent construction waste, debris, rubble (for example: dust, concrete debris and saw cutting by-products, welding slag, and grindings) and work materials from damaging protected features.

- Not require any tree removal, clearing, or grubbing, unless approved by the Project Manager.
- Prohibit the use of treated timber.
- Prohibit the use of concrete form release agents within waters of the State and U.S., wetlands, drainage ditches, water quality facilities, or other water conveyances.
- Include full containment of fueling procedures.
- Require the WCS to be fire retardant or resistant to fire from welding slag, torch operation or any sparks from the Work.
- Require the WCS to be weather resistant.

(b) Work Containment System (WCS) - The WCS shall consist of a containment system that is rigid and in place before (repair) (removal) work begins, as described in the WCP. Design the containment system for not less than the system self-weight plus 25 psf live loading, or system self-weight plus debris weight plus removal equipment weight, or load combinations. Debris weight includes the possibility of a concrete form failure, concrete spills, and any other construction material load imposed on the containment system.

The WCS shall show specific attention to the need for special care in demolition work. Provide all required shoring, bracing, barricades, fencing, and other devices that may be required, and exercise all necessary precautions to fully protect pedestrian, vehicular, and navigation traffic, and to minimize disturbance to protected features and to prevent damage to the new bridge or other structures.

The WCS shall be designed and stamped by a registered Professional Engineer. Include all load assumptions and calculations and submit stamped working drawings to the Agency according to 00150.35.

00290.51 Protection of Sensitive Cultural Sites - Add the following to the end of this subsection:

There are sensitive cultural sites and associated "No Work Zones" on this Project.

The Agency Archaeologist for this Project is Jessica Bochart.
All contact with the Agency Archaeologist shall be through the Project Manager's office.

Contractor, Inspector, ODOT Regional Environmental Coordinator and Agency Archaeologist will discuss location of archaeological sites and high probability areas, prior to construction. Contractor to identify all No Work Zones with orange plastic mesh fencing from the QPL or lath and flagging, as shown.

00290.90 Payment - Add the following paragraph(s) to the end of this subsection:

The work containment plan and the work containment system will be paid for at the Contract lump sum amount for the item "Work Containment Plan and System".

Payment will be payment in full for furnishing all materials, equipment, labor, and incidentals necessary to complete the work as specified. Payment includes providing and updating the work containment plan and for designing, constructing, maintaining, and removing the containment system.

No separate or additional payment will be made for orange plastic mesh fencing.

SECTION 00305 - CONSTRUCTION SURVEY WORK

Section 00305, which is not a Standard Specification, is included for this Project by Special Provision.

Description

00305.00 Scope - Provide construction survey work according to the current edition on the date of Advertisement, of the ODOT "Construction Surveying Manual for Contractors". This manual is available on the web at:

http://www.oregon.gov/ODOT/HWY/GEOMETRONICS/documents.shtml

Measurement

00305.80 Measurement - No measurement of quantities will be made for construction survey work.

Payment

00305.90 Payment - The accepted quantities of construction survey work will be paid for at the Contract lump sum amount for the item "Construction Survey Work".

Payment will be payment in full for furnishing all material, equipment, labor, and incidentals necessary to complete the work as specified.

No separate or additional payment will be made for all temporary protection and direction of traffic measures including flaggers and signing necessary for the performance of the construction survey work.

No separate or additional payment will be made for preparing surveying documents including but not limited to office time, preparing and checking survey notes, and all other related preparation work.

Progress payments will not be in excess of the reasonable value of the surveying work estimated by the Engineer.

Costs incurred caused by survey errors will at the Contractor's expense. These costs include price adjustments for failure to meet requirements of the "Construction Surveying Manual for Contractors", repair or removal and replacement of deficient product, and over-run of material.

SECTION 00310 - REMOVAL OF STRUCTURES AND OBSTRUCTIONS

Comply with Section 00310 of the Standard Specifications modified as follows:

00310.41(a) General - Replace this subsection, except for the subsection number and title, with the following:

Where an abutting structure or part of a structure is to be left in place, make clean, smooth, vertical cuts with a saw or other approved cutting device. Avoid operations that may damage any portion of the remaining structure.

SECTION 00320 - CLEARING AND GRUBBING

Comply with Section 00320 of the Standard Specifications modified as follows:

00320.42 Ownership and Disposal of Matter - Replace this subsection with the following subsection:

00320.42 Disposal of Matter - Dispose of all matter and debris according to 00290.20.

SECTION 00330 - EARTHWORK

Comply with Section 00330 of the Standard Specifications modified as follows:

00330.03 Basis of Performance - Add the following paragraph to the end of this subsection:

Perform all earthwork under this Section except for Stone Embankment on the excavation basis.

00330.20 Tamping Foot Rollers - In the paragraph, replace "115 tons" with "15 tons".

00330.41(a-4) Excess Materials - Replace this subsection, except for the subsection number and title, with the following:

If the quantities of excavated materials are greater than required to construct embankments and to do all filling and backfilling, use remaining materials to extend rip rap top dressing and uniformly widen embankments or to flatten slopes in a manner satisfactory to the Engineer.

00330.41(a-5) Waste Materials - Replace this subsection, except for the subsection number and title, with the following:

Unless otherwise specifically allowed and subject to the requirements of 00280.03, dispose of materials, classed as waste materials in 00330.41(a-3), outside and beyond the limits of the Project and Agency controlled property according to 00290.20. Do not dispose of materials on wetlands, either public or private, or within 300 feet of rivers or streams.

00330.41(a-9) Excavation Below Grade - Delete the bullet that begins "Unstable Subgrade...".

00330.42(c-3) Embankment Slope Protection - Add the following paragraph:

Construct the outer 12 inches of embankments with suitable materials to establish slope stabilization through permanent seeding. If suitable material is not available, provide suitable materials from a Contractor-provided source which conforms to the requirements of 00330.11 or 00330.13 and provides favorable conditions for germination of seed and growth of grass.

00330.80 Measurement - Replace the bullet that begins "Volume basis, computed by...", with the following bullet:

- Volume basis, based on the Agency's digital terrain model (DTM) calculated by End Area Volume, or by other methods of equivalent accuracy.

Add the following bullets to the end of the bullet list:

00330.94 Embankment Basis Payment - Delete the paragraph that begins "Excavation of unsuitable...".

SECTION 00331 - SUBGRADE STABILIZATION

Comply with Section 00331 of the Standard Specifications.

SECTION 00340 - WATERING

Comply with Section 00340 of the Standard Specifications.

SECTION 00350 - GEOSYNTHETIC INSTALLATION

Comply with Section 00350 of the Standard Specifications modified as follows:

00350.10 Materials - Add the following to the end of this subsection:

Provide manufacturer's certifications complying with 02320.10(c) for the following geosynthetic(s):

	Certification	
Geotextile	**Level A**	**Level B**
Drainage, Type 1		X
Riprap, Type 2		X
Subgrade	X	

SECTION 00370 - FINISHING ROADBEDS

Comply with Section 00370 of the Standard Specifications.

SECTION 00390 - RIPRAP PROTECTION

Comply with Section 00390 of the Standard Specifications modified as follows:

00390.11(b) Test Requirements - Under the "Requirement" column next to "Sediment Height" replace 8" with 8.0".

00390.43 Riprap Backing - Add the following sentence to the end of the paragraph:

Use either riprap geotextile or a filter blanket under the riprap.

SECTION 00405 - TRENCH EXCAVATION, BEDDING, AND BACKFILL

Comply with Section 00405 of the Standard Specifications.

SECTION 00430 - SUBSURFACE DRAINS

Comply with Section 00430 of the Standard Specifications.

SECTION 00440 - COMMERCIAL GRADE CONCRETE

Comply with Section 00440 of the Standard Specifications modified as follows:

00440.10 Materials - In the list of materials, delete the "Aggregates....02690" line.

00440.14(a) General - In the work item list, replace the square tube sign support line with the following line:

Perforated Steel Square Tube Sign Support Footings.....00920

SECTION 00445 - SANITARY, STORM, CULVERT, SIPHON, AND IRRIGATION PIPE

Comply with Section 00445 of the Standard Specifications modified as follows:

00445.80(a) Pipes - In the length bullet, add ", to the nearest foot" after the word "applicable".

SECTION 00460 - PAVED CULVERT END SLOPES

Comply with Section 00460 of the Standard Specifications.

SECTION 00470 - MANHOLES, CATCH BASINS, AND INLETS

Comply with Section 00470 of the Standard Specifications.

SECTION 00501 - BRIDGE REMOVAL

Comply with Section 00501 of the Standard Specifications modified as follows:

00501.00 Scope - Add the following paragraph to the end of this subsection:

Remove the following:

- The existing bridge that carries OR138E over Dodge Creek at approximately mile point 20.95.
- The existing bridge that carries OR138E over Dodge Creek at approximately mile point 21.15.
- The existing bridge that carries OR138E over Calapooya Creek at approximately mile point 22.10.

Add the following subsection:

00501.02 Plans - Plans of the existing structure are available for viewing at the office of the Engineer. Prints of these plans are available upon request.

SECTION 00510 - STRUCTURE EXCAVATION AND BACKFILL

Comply with Section 00510 of the Standard Specifications modified as follows:

00510.80(b-1) Structure Excavation (Lump Sum) - Add the following to the end of this subsection:

The estimated quantity of structure excavation is:

Location	Structure Excavation (Cubic Yard)
Calapooya Creek, Hwy 231 at MP 22.10 (Br. No. 20861)	90
Dodge Creek, Hwy 231 at MP 20.95 (MSE wall not included) (Br. No. 21162)	35
Dodge Creek, Hwy 231 at MP 21.15 (Br. No. 21163)	87

00510.80(c-1) Structure Excavation Below Elevations Shown (Lump Sum) - In the first bullet, replace "00190.10(f)" with "00190.10(h)".

00510.80(d) Granular Wall/Structure Backfill - Replace this subsection, except for the subsection number and title, with the following:

No measurement of quantities will be made for granular wall backfill or granular structure backfill. The estimated quantity of granular wall backfill or granular structure backfill is:

Location	Granular Wall/Structure Backfill (Cubic Yard)
Calapooya Creek, Hwy 231 at MP 22.10 (Br. No. 20861)	50
Dodge Creek, Hwy 231 at MP 20.95 (MSE wall not included) (Br. No. 21162)	21
Dodge Creek, Hwy 231 at MP 21.15 (Br. No. 21163)	53

00510.90(c-1) Structure Excavation Below Elevations Shown (Lump Sum) - In the sentence that begins "For excavation 0 to 3 feet...", replace "00190.10(f)" with "00190.10(h)".

00510.90(d) Granular Wall/Structure Backfill - Replace this subsection, except for the subsection number and title, with the following:

Granular wall backfill and granular structure backfill will be paid for at the Contract lump sum amount for the items "Granular Wall Backfill" or "Granular Structure Backfill", as applicable.

Payment for wall drain pipe and outlet block will be included in payment made for the Pay Item "Granular Wall/Structure Backfill". All materials shall be according to section 00430 of Standard Specification.

COFFERDAM DESIGN CHECKLIST

Instructions - This cofferdam design checklist was developed to facilitate the design, review, and erection of cofferdams to be used for ODOT bridge construction projects. This checklist is intended to act as a reminder to design or check for specific important aspects of this construction. It is not a substitute for plan and/or design criteria or specification requirements.

The Checklist is to be completed and signed by the cofferdam design engineer. Answer every question. Attach to the Checklist an explanation of any negative responses.

Submit the Checklist according to 00510.03.

	YES	NO	N/A
A. Contract Plans, Specifications, Permits, etc.			
1. Are the cofferdam plans prepared, stamped and signed by an engineer registered to practice in Oregon?	____	____	____
2. Have three copies (five copies if railroad approval is required) of the complete design calculations accompanied the cofferdam drawings submittal?	____	____	____
3. Are cofferdam plans in compliance with the requirements of the construction plans general notes?	____	____	____
4. Are cofferdam plans in compliance with contract plan structural details?	____	____	____
5. Are cofferdam plans in compliance with the requirements of the Oregon Standard Specifications for Construction, subsection 00150.35?	____	____	____
6. Are all existing, adjusted or new utilities in proximity with the proposed cofferdam shown on the cofferdam plans and is projection of these utilities addressed?	____	____	____
7. Are clearance requirements satisfied and shown on the cofferdam plans?	____	____	____
B. Loads			
1. Are the magnitude and location of all loads, equipment and personnel that will be supported by the cofferdam shown noted on the cofferdam plans?	____	____	____
2. Are design loads and material properties used to determine design stresses shown for each different cofferdam member shown on the cofferdam plans?	____	____	____
3. Is the assumed water elevation for seal design shown on the plans?	____	____	____

4. Does the cofferdam design assume water pressure acts on the full height of the cofferdam (from the vent to the bottom of the excavation?) ____ ____ ____

5. Has percolation into the excavation been addressed? ____ ____ ____

C. Allowable Stresses

1. Have the design loads used for cofferdam design of all members been noted in the design calculations? ____ ____ ____

2. Are the allowable stress and the calculated stress listed in the summary for each different cofferdam member? ____ ____ ____

D. Timber Construction

1. Are timber grades consistent with material to be delivered to the construction site, noted on the cofferdam drawings, and in accompanying calculations for all timber cofferdam material? ____ ____ ____

2. If "rough" lumber is specified for the cofferdam, are the actual lumber dimensions used in the calculations shown? ____ ____ ____

E. Steel Construction

1. Are steel structural shapes and plates identified by ASTM number on the cofferdam plans and in the calculations? ____ ____ ____

2. Have steel beams been checked for bending, shear, web crippling and buckling of the compression flange? ____ ____ ____

F. Compression Members, Bracing Members and Connections

1. Has general buckling been evaluated for all compression members? ____ ____ ____

2. Has bracing been provided at all points of assumed support for compression members? ____ ____ ____

3. Is bracing strength and stiffness sufficient for the intended purpose? ____ ____ ____

4. Have all connections been designed and detailed? ____ ____ ____

_____ _____
Designer's Signature Date

SHORING DESIGN CHECKLIST

Instructions - This shoring design checklist was developed to facilitate the design, review, and erection of shoring to be used for ODOT bridge construction projects. This checklist is intended to act as a reminder to design or check for specific important aspects of this construction. It is not a substitute for plan and/or design criteria or specification requirements.

The Checklist is to be completed and signed by the shoring design engineer. Answer every question. Attach to the Checklist an explanation of any negative responses.

Submit the Checklist according to 00510.04.

	YES	NO	N/A
A. Contract Plans, Specifications, Permits, etc.			
1. Are the shoring plans prepared, stamped, and signed by an engineer registered to practice in Oregon?	___	___	___
2. Have three copies (five copies if railroad approval is required) of the complete design calculations accompanied the shoring drawings submittal?	___	___	___
3. Are shoring plans in compliance with the requirements of the construction plans general notes?	___	___	___
4. Are shoring plans in compliance with contract plan structural details?	___	___	___
5. Are shoring plans in compliance with the requirements of the Oregon Standard Specifications for Construction, subsection 00150.35?	___	___	___
6. Are all existing, adjusted or new utilities in proximity with the proposed shoring shown on the shoring plans and is protection of these utilities addressed?	___	___	___
7. Are clearance requirements satisfied and shown on the shoring plans?	___	___	___
B. Loads			
1. Are the magnitude and location of all loads, equipment and personnel that will be supported by the shoring shown or noted on the shoring plans?	___	___	___
2. Are design loads and material properties used to determine design stresses shown for each different shoring member shown on the shoring plans?	___	___	___

3. Does the shoring design assume water saturated soil pressure acts on the full height of the shoring? ____ ____ ____

4. Has percolation into the excavation been addressed? ____ ____ ____

C. Allowable Stresses

1. Have the design loads used for shoring design of all members been noted in the design calculations? ____ ____ ____

2. Are the allowable stress and the calculated stress listed in the summary for each different shoring member? ____ ____ ____

D. Timber Construction

1. Are timber grades consistent with material to be delivered to the construction site and noted on shoring drawings and in accompanying calculations for all timber shoring material? ____ ____ ____

2. If "rough" lumber is specified for shoring by the shoring designer are the actual lumber dimensions used in calculations shown? ____ ____ ____

E. Steel Construction

1. Are steel structural shapes and plates identified by ASTM number on the shoring plans and in the calculations? ____ ____ ____

2. Have steel beams been checked for bending, shear, web crippling and buckling of the compression flange? ____ ____ ____

F. Compression Members, Bracing, Members and Connections

1. Has general buckling been evaluated for all compression members? ____ ____ ____

2. Has bracing been provided at all points of assumed support for compression members? ____ ____ ____

3. Is bracing strength and stiffness sufficient for the intended purpose? ____ ____ ____

4. Have all connections been designed and detailed? ____ ____ ____

_____ _____
Designer's Signature Date

SECTION 00512 - DRILLED SHAFTS

Comply with Section 00512 of the Standard Specifications modified as follows:

00512.13 Steel Casing - Delete the sentence that begins "Use casing with an outside diameter...".

00512.18 Grout - Replace this subsection with the following subsection:

00512.18 CSL Cement Grout - Furnish non-epoxy grout or tendon grout from the QPL or furnish a pumpable CSL cement grout consisting of neat cement and water that has a water cement ratio between 0.38 and 0.45. The portland cement for the pumpable CSL cement grout shall meet the requirements of Section 02010.

00512.43(c) Temporary Casing - In the paragraph that begins "Where the acceleration coefficient...", replace the words "acceleration coefficient" with the words "peak horizontal ground acceleration coefficient for the 1,000 year return period" and replace the value "0.10" with "0.16 g (acceleration due to gravity)".

Add the following subsection:

00512.44 Permanent Casing - Furnish and install permanent casing as follows:

Bridge Number	Bent Number	Casing Size	Elevation for Top of Casing (Feet)	Elevation for Bottom of Casing (Feet)
20861	2	8'-0"	372.07	364.40

Perform welding of all permanent casing according to AWS D1.1. Test all full penetration welds using nondestructive methods by either radiograph or ultrasonic methods. Base nondestructive testing acceptance criteria on cyclic tension loading.

After concrete placement, fill all void space between the casing and the shaft excavation with a material that approximates the geotechnical properties of the in-situ materials.

00512.45(d) Concrete Cover - Replace this subsection, except for the subsection number and title, with the following:

Maintain the required concrete cover shown by placing concentric spacer bars or other approved devices around the reinforcing cage. Place spacing devices on minimum 10 foot vertical spacings the full length of the shaft. At each 10 foot level, place spacers on a minimum 30 inch circumferential spacing with at least three spaces per level. Do not use wood spacers or concrete dobies. Provide details of the proposed centering method on the shop drawings submitted according to 00512.40.

00512.48(a) Crosshole Sonic Log Testing - Add the following to the end of this subsection:

For drilled shafts constructed using non-contact splice methods, perform CSL testing after the initial pour to the bottom of the splice region and prior to placement of the column reinforcement and pouring of the splice region.

00512.80(d) Drilled Shaft Concrete - Add the following at the end of the paragraph:

The estimated quantity of drilled shaft concrete is:

Structure	Class	Quantity (Cubic Yard)
20861	4000	93

00512.80(e) Drilled Shaft Reinforcement - Add the following at the end of the paragraph:

The estimated quantity of drilled shaft reinforcement is:

Structure	Uncoated (Pound)	Quantity
20861	10,520	

00512.80(f) Crosshole Sonic Log Equipment Mobilization - Delete this subsection.

00512.80(h) Crosshole Sonic Log Tests - Replace the sentence that begins "No separate measurement..." with the following sentence:

No separate measurement will be made for CSL equipment and operating personnel or for CSL tests performed at the Contractor's option.

00512.90 Payment - Delete the paragraph that begins "Item (f) includes...".

Item (h) includes mobilization of all CSL testing equipment and personnel to and from the site, all CSL testing, interpretation, analysis, electronic data, and final report for each tested and accepted shaft.

SECTION 00520 - DRIVEN PILES

Comply with Section 00520 of the Standard Specifications modified as follows:

00520.11 Engineer's Estimated Length List - Add the following to the end of this subsection:

The Engineer's estimated lengths of steel piling are:

Location	No.	Length (Feet)	Kind
Bridge 20861 – Bent 1	8	40	HP12x84

Bridge 20861 – Bent 3	6	40	HP12x84
Bridge 21162 – Bent 1	6	30	HP14x89
Bridge 21162 – Bent 2	6	35	HP14x89
Bridge 21163 – Bent 1	8	30	HP12x84
Bridge 21163 – Bent 2	8	25	HP12x84

00520.20(d-3) Wave Equation Method - Add the following paragraph and table(s) at the end of this subsection:

The input values for the wave equation analyses are:

Bridge-Bent	Pile Type	Pile Length * (Feet)	Quake (Inches)		Damping (sec./ft.)		% skin (ITYS)	R_n (kips)
			Skin	Toe	Skin	Toe		
20861 - Bent 1	HP12x84	40	0.10	0.10	0.05	0.15	98	890
20861 - Bent 3	HP12x84	40	0.10	0.10	0.05	0.15	98	890
21162 - Bent 1	HP14x89	30	0.10	0.10	0.05	0.15	14	940
21162 - Bent 2	HP14x89	35	0.10	0.10	0.05	0.15	12	940
21163 - Bent 1	HP12x84	30	0.10	0.10	0.05	0.15	7	890
21163 - Bent 2	HP12x84	25	0.10	0.10	0.05	0.15	5	890

* These pile lengths are based on the top of the pile being approximately 5 feet above the finished cutoff elevation. All additional pile length above that elevation, that may be required to accommodate the Contractors pile installation method or site conditions, shall be added to the lengths listed above and appropriate changes made to the skin friction distribution input listed below.

For Bridges 21162 and 21163 use triangular skin friction distribution.

For Bridge 20861 use the relative skin friction distribution values listed below in the WEAP analysis:

Bent 1		Bent 3	
Depth* (Feet)	Relative Distribution	Depth* (Feet)	Relative Distribution
2.0	0.0	2.0	0.0
11.3	1.2	6.4	1.4
16.3	0.4	7.4	1.4
18.8	0.2	12.4	0.6
24.6	0.2	15.4	0.7

25.8	0.7	17.3	0.7
26.0	32.4	17.4	0.8
36.6	32.4	22.4	0.8
		22.8	32.4
		33.4	32.4

* Depths are depth below finished cutoff elevation; assume approximately 4 to 7 ft. stick up above this level.

SECTION 00530 - STEEL REINFORCEMENT FOR CONCRETE

Comply with Section 00530 of the Standard Specifications modified as follows:

00530.30 Mechanical Splice Installers - Replace the bullet that begins "Construct each splice sample with two..." with the following bullet:

- Construct each splice sample with two equal lengths of straight reinforcing bar so the total length of the assembled splice sample is at least 72 inches for No. 3 through No. 8 bars and at least 96 inches for No. 9 through No. 18 bars.

00530.42(c-2-c) Testing - Replace the sentence that begins "Construct test splices with two..." with the following sentence:

Construct test splices with two equal lengths of straight reinforcing bar so that the total length of the assembled splice is not less than 72 inches for No. 3 through No. 8 bars and not less than 96 inches for No. 9 through No. 18 bars.

00530.80(a) Lump Sum - Add the following to the end of this subsection:

The estimated quantity of reinforcement is:

Structure	Quantity Uncoated (Pound)
Dodge Creek, Hwy 231 at MP 20.95 (BR No. 21162)	9,180
Dodge Creek, Hwy 231 at MP 21.15 (BR No. 21163)	76,000
Calapooya Creek, Hwy 231 at MP 22.10 (BR No. 20861)	158,624

The weight of miscellaneous metal, based on weights listed in 00530.80(b) and Project quantities, is included in the estimated quantity of uncoated reinforcement.

SECTION 00540 - STRUCTURAL CONCRETE

Comply with Section 00540 of the Standard Specifications modified as follows:

00540.10 General - Add the following sentence to the end of this subsection:

Furnish a concrete surface retarder from the QPL.

00540.15 Form Materials - Replace this subsection, except for the subsection number and title, with the following:

Furnish wood, minimum nominal 5/8 inch thick APA exterior grade plywood, minimum nominal 5/8 inch thick APA plyform, metal, or other suitable form material. For round concrete columns, provide either metal or other approved form material that produces a smooth and true surface free from fins, joints and other irregularities. Use APA plyform for all decks and slabs.

00540.17(a) Aggregate - Delete the sentence that reads "Blend aggregates only as allowed in 02001.20."

00540.17(c) Hardened Concrete - In the paragraph that begins "Cast and cure test...", replace "14 inch x 8 inch" with "4 inch x 8 inch".

00540.17(c-3) Acceptance - Replace the paragraph that begins "If an ASTV falls..." with the following paragraph:

If an ASTV falls below $f'c$, the Contractor may submit a written plan outlining a proposed alternate method of evaluating compressive strength. Submit the plan for review by the Engineer within three days of the test. Provide evidence that a reasonable $f'cr$ (over-design) was maintained and that there is credible evidence (besides low strength) which warrants consideration of this option. The Engineer may allow an alternate method of acceptance if the compressive strength test results are determined to be suspect from definable external factors.

00540.43(a) Construction Joints - Replace the paragraph that begins "Within 24 hours after..." with the following paragraphs:

Apply a concrete surface retarder according to the manufacturer's recommendations. Remove surface mortar within the time period recommended by the manufacturer and clean the joint surface and reinforcing steel by removing loosened particles of aggregate, damaged concrete, unconsolidated concrete and surface laitance with a high pressure washer conforming to 00540.28 to the extent that clean aggregate (free of surface mortar) is exposed on 50% of the surface. Clean the joint surface again immediately prior to the concrete placement to remove any subsequent deposits of dirt, debris or other foreign materials. Saturate the joint surface with potable water immediately before resuming concrete placement. Remove standing water in depressions or hollows of the joint surface. Saw cut the top 1 inch of the deck joints with a straight vertical cut before subsequent concrete placement and before saturating the surface with water. Where joints are straight and without spalls, the Engineer may waive this saw cut requirement.

Hand rub or brush fresh concrete paste onto the existing surface of vertical deck joints down to the top mat of reinforcing steel at the beginning of subsequent concrete placement.

Stay in place joint forms are not allowed in bridge deck construction joints.

00540.43(c) Joint with Fillers - Add the following sentence to the end of the paragraph:

Provide a 3/4 inch chamfer on each edge of the joint unless otherwise noted.

00540.48(g) Bridge Decks - Add the following bullet to the bullet list:

- Has saturated the tops of precast prestressed concrete members and formwork by applying continuous water for a minimum of 2 hours immediately prior to beginning deck placement.

00540.49(a-2-a) General - Replace the paragraph that begins "Do not place ..." with the following two paragraphs:

Do not place concrete if the air temperature is, or is forecast to be, below 40 °F the day of placement or is forecast to be below 40 °F on any of the next seven calendar days (14 calendar days for decks) after placement unless a Cold Weather Plan has been approved by the Engineer.

To place concrete when the temperature is below 40 °F, submit a Cold Weather Plan that identifies the methods that will be used to prevent the concrete temperature from falling below 50 °F. Methods include heated enclosures and insulated forms. Also include in the plan measures that will be taken if the concrete temperature falls below 50 °F. Provide a 24 hour continuous recording thermometer to verify the concrete temperature.

00540.49(b) Bridge Deck Placement - Add the following bullet before the first bullet:

- Only if precipitation is not forecast between 2 hours before and 2 hours after the scheduled placement duration. An acceptable forecast will have less than 30% chance of precipitation for the entire placement window. Provide a forecast to the Engineer 1 hour before placement.

00540.50(c) Deck Roadway Texturing - In the bullet that begins "Unequally space...", replace "Unequally space grooves from" with "Space groves randomly from".

Add the following bullet after the bullet that begins "Orient the grooves...":

- Do not groove within 6 inches of joint blockouts and bridge ends. For skewed bridges, additional ungrooved portions at joint blockouts and bridge ends are allowed to accommodate the width of the gang saw.

00540.51(b) Curing Concrete Bridge Decks - In the bullet that begins "Provide wind breaks...", replace "0.20 pounds per square foot" with "0.10 pounds per square foot".

00540.53(a-1) On All Surfaces - In the bullet that begins "Fill holes and...", replace "1/2 inch" with "1/4 inch".

00540.53(d-1) Concrete Paint - In the sentence that begins "Thoroughly saturate the surface...", replace "02210.30(c)" with "02210.30".

00540.54 Crack Inspection and Deck Sealing - Replace the paragraph that begins "Immediately after the cure..." with the following paragraph:

Before opening the bridge deck to traffic, the Engineer will inspect the deck for cracks.

00540.80(a-1) Lump Sum - Add the following to the end of this subsection:

The estimated quantity of concrete is:

Bridge No. 21162

Type and Class	Quantity (Cu. Yd.)
General Structural Concrete, Class 3300	47

Bridge No. 21163

Type and Class	Quantity (Cu. Yd.)
Deck Concrete, Class HPC4000	166
General Structural Concrete, Class 3300	162

Bridge No. 20861

Type and Class	Quantity (Cu. Yd.)
Deck Concrete, Class HPC4000	455
General Structural Concrete, Class 3300	227

00540.80(b) Saw Cut Texturing - Replace this subsection, except for the subsection number and title, with the following:

The quantities of surface texturing will be measured on the area basis and will be the area of each bridge deck or end panel shown less 16 inches along each curb. Field measurement of surface texturing will not be made. The area will be calculated to the nearest square yard for each bridge deck or end panel.

FALSEWORK DESIGN CHECKLIST

Instructions - This checklist was developed to facilitate the design, review, and erection of falsework to be used for Oregon Department of Transportation bridge construction projects. This checklist is intended to act as a reminder to design or check for specific important aspects of this construction. It is not a substitute for plan and/or design criteria or specification requirements.

The Checklist is to be completed and signed by the Falsework Design Engineer. Answer every question. Attach to the Checklist an explanation of any negative responses.

Submit the Checklist according to 00540.41(a).

	YES	NO	N/A
A. Contract Plans, Specifications, Permits, Etc.			
1. Are the falsework plans prepared, stamped and signed by an engineer registered to practice in Oregon?	___	___	___
2. Have three complete sets (five if railroad approval is required) of the design calculations been included with the falsework drawings submittal?	___	___	___
3. Are falsework plans in compliance with the requirements of the construction plans general notes?	___	___	___
4. Are falsework plans in compliance with contract plan structural details?	___	___	___
5. Are falsework plans in compliance with the requirements of the Oregon Standard Specifications for Construction, subsection 00150.35?	___	___	___
6. Are all existing, adjusted or new utilities in proximity with the proposed falsework shown on the falsework plans and is protection of these utilities addressed?	___	___	___
7. Are clearance requirements satisfied and shown on the falsework plans?	___	___	___
8. For construction in or over navigable waters have all requirements for construction of falsework that are called for in the Coast Guard Permit been incorporated in the falsework design?	___	___	___
9. Has possible damage from traffic been considered in the falsework design?	___	___	___

10. Has damage from stream drift been considered in the falsework design? ___ ___ ___

11. Is the concrete placing sequence shown and is it consistent with the contract plans? ___ ___ ___

B. Foundation Requirements

1. Are driven falsework piling provided as called for on the contract plans? ___ ___ ___

   a. Is a minimum pile tip elevation or penetration indicated on the drawings? ___ ___ ___

   b. If timber falsework piles are specified, are the recommended order lengths sufficient to virtually eliminate the possibility of pile splices? ___ ___ ___

   c. Is a detailed static pile capacity analysis included in the calculations? ___ ___ ___

   d. If lateral loads are applied to the piling by equipment, dead loads, flowing water, or drift, is a detailed lateral load analysis included in the calculations? ___ ___ ___

   e. When piling are in an active waterway, have the potential effects of scour on axial and lateral pile support been addressed in the calculations? ___ ___ ___

   f. Does the proposed falsework pile hammer meet the minimum field energy requirements as listed in 00520.20(d-2)? ___ ___ ___

   g. Will a driving criteria graph [FHWA Gates Equation, in 00520.42(b)] plotting blow count versus stroke for an acceptable pile hammer be provided for the project inspector? ___ ___ ___

2. Is falsework supported on spread footings or mud sills? ___ ___ ___

   a. Are the spread footing elevations shown on the drawings? ___ ___ ___

   b. Has a rational method for determining the ultimate bearing capacity of the foundation materials been presented and described in the calculations? ___ ___ ___

c. Have the soil parameters used in calculating the ultimate bearing capacity been listed and confirmed by the designer? ____ ____ ____

d. Has an appropriate Factor of Safety been used for calculating the allowable bearing capacity of the foundation materials? ____ ____ ____

e. Are spread footing settlement estimates included in the calculations? ____ ____ ____

f. Have effective stresses been used in the calculations, when applicable? ____ ____ ____

g. When spread footings are founded near the top of a slope or in a slope, have the ultimate bearing capacity calculations been modified accordingly? ____ ____ ____

h. When spread footings may be subjected to flowing water, have the potential effects of scour on ultimate bearing capacity been addressed in the calculations? ____ ____ ____

C. Loads

1. Are the magnitude and location of all loads, equipment and personnel that will be supported by the falsework shown and noted on the falsework plans? ____ ____ ____

2. Has the mass of specific equipment units to be supported by the falsework been included in the calculations or on the falsework plans? ____ ____ ____

3. Is the deck finishing machine supported in a manner that will not impose load on concrete forms except deck overhang brackets? ____ ____ ____

4. Are design loads and material properties used to determine design stresses for each different falsework member shown on the falsework plans? ____ ____ ____

5. Is the worst loading and member property condition, rather than the average condition, used to obtain design loads? ____ ____ ____

6. Are deck forms for concrete box girders supported from the girder stem and not from the bottom slab? ____ ____ ____

7. Are diaphragm loads or other concentrated loads included in the analysis of supporting beams? ____ ____ ____

8. If sloping structural members exert horizontal forces on the falsework, is bracing or ties used to resist these loads? ___ ___ ___

D. Allowable Stresses

1. Has the method used for falsework design of all members except for manufactured assemblies been noted in the design calculations? ___ ___ ___

2. Are manufactured assemblies identified as to manufacturer, model, rated working capacity and ultimate capacity? ___ ___ ___

3. Is the allowable stress and the calculated stress listed in the summary for each different falsework member, except for manufactured assemblies? ___ ___ ___

E. Timber Falsework Construction

1. Are timber grades consistent with material to be delivered to the construction site, and noted on falsework drawings, and in accompanying calculations for all timber falsework material? ___ ___ ___

2. If "rough" lumber is specified for falsework by the falsework designer are the actual lumber dimensions used in calculations shown? ___ ___ ___

3. If plywood spans are governed by the strength of the plywood, are the allowable stress and the calculated stress shown on the submitted calculations? ___ ___ ___

4. If plywood spans are governed by the allowable spacing of supporting joists, are the allowable and the proposed spacing shown on the falsework plans? ___ ___ ___

5. Have timber stringers been checked for bending, shear, bearing stresses, and 1/240 of the span length deflection? ___ ___ ___

6. Are joists identified as being continuous over 3 or more spans when they are not analyzed as simple spans? ___ ___ ___

7. Have stringers and cap beams been checked for bearing stresses perpendicular to the grain as well as for bending and shear stresses? ___ ___ ___

8. Have posts been checked as columns as well as for compression parallel to the grain? ___ ___ ___

F. Steel Falsework Construction

1. Are steel structural shapes and plates identified by ASTM number on the falsework plans and in the calculations? ____ ____ ____

2. Have steel beams been checked for bending, shear, web crippling and buckling of the compression flange? ____ ____ ____

3. Has horizontal plane bracing been shown where required to limit compression flange buckling? ____ ____ ____

G. Deflections and Settlement

1. Is falsework deflection for concrete dead load shown on the plans for all falsework spans? ____ ____ ____

2. Is falsework deflection from concrete dead load limited to 1/240 of the span length for all falsework spans? ____ ____ ____

3. Do stringers supporting cast-in-place concrete compensate for estimated camber? ____ ____ ____

4. For beam spans with cantilevers, has the upward deflection of the cantilevers due to load placed on the main spans been investigated? ____ ____ ____

5. Are provisions shown for taking up falsework settlement? ____ ____ ____

H. Compression Members, Connections and Bracing

1. Has general buckling been evaluated for all compression members? ____ ____ ____

2. Has bracing been provided at all points of assumed support for compression members? ____ ____ ____

3. Was bracing in each direction considered in establishing the effective length used to check post capacity? ____ ____ ____

4. Is bracing strength and stiffness sufficient for the intended purpose? ____ ____ ____

5. If temporary bracing is required during intermediate stages of falsework erection, is it shown on the falsework plans? ____ ____ ____

6. Have all connections been designed and detailed? ____ ____ ____

7. Are web stiffeners required on steel cap beams to resist eccentric loads? ____ ____ ____

8. Are wedges required between longitudinal beams and cap beams to accommodate longitudinal slope or to reduce eccentric loading? ____ ____ ____

9. Has the width to height ratio of wedge packs been verified to fall within the limits given in the special provisions? ____ ____ ____

10. If overhang brackets are attached to unstiffened girder webs, has the need for temporary bracing to prevent longitudinal girder distortion been investigated? ____ ____ ____

11. Have beams and stringers with height/width ratios greater than 2.5:1 been checked for stability? ____ ____ ____

12. Have sloping falsework members that exert horizontal forces on the falsework been braced or tied to resist these loads? ____ ____ ____

13. If beams supporting cast-in-place concrete have cantilever spans, have the falsework plans been noted to require the main spans be loaded before loading the cantilever spans? ____ ____ ____

14. Have timber headers set on shoring towers been checked for eccentric loads, and for shear and bending stresses produced by the eccentricity? ____ ____ ____

I. Highway and Railroad Traffic Openings (For falsework over or adjacent to highway or railroad traffic openings.)

1. Do falsework plans satisfy construction clearances shown on the contract plans? ____ ____ ____

2. Are posts designed for 150% of the calculated vertical loading and increased or readjusted for loads caused by prestressing forces? ____ ____ ____

3. Are mechanical connections 2,000 pounds minimum capacity shown at the bottom of posts to footing connections? ____ ____ ____

4. Are mechanical connections 1,000 pounds minimum capacity shown at the top of the post to cap connections? ____ ____ ____

5. Are beam tie downs 500 pounds minimum capacity shown for all beams? ____ ____ ____

6, Are 5/8 inch or larger diameter bolts used at connections for timber bracing? ____ ____ ____

7. Are temporary erection and removal bracing shown? ____ ____ ____

J. Additional Requirements for Railroad Traffic Openings

1. Do falsework plans show collision posts as shown on the contract plans? ___ ___ ___

2. Do posts adjacent to the openings have a minimum section modulus of?

   a. steel - 9.5 cubic inches ___ ___ ___
   b. timber - 250 cubic inches ___ ___ ___

3. Are soffit and deck overhang forming details shown? ___ ___ ___

4. Are falsework bents within 20 feet of centerline of the track sheathed solid between 3 feet and 17 feet above top of rail with 5/8 inch thick minimum plywood and properly blocked at the edges? ___ ___ ___

5. Is bracing on the bents within 20 feet of the centerline of the track adequate to resist the required assumed horizontal load or minimum 5,000 pounds, whichever is greater? ___ ___ ___

_____ _____
Designer's Signature Date

SECTION 00542 - ARCHITECTURAL TREATMENT

Section 00542, which is not in the Standard Specifications, is included in this project by Special Provision.

Description

00542.00 Scope - This work consists of constructing textured concrete surfaces on the face of the MSE Wall.

Materials

00542.10 General - Furnish, store, prepare, apply, and cure all materials according to manufacturers' directions specified for the intended use.

00542.11 Form Liners - Furnish one of the following form liner systems, or approved equal:

- Pattern #167D (Ashlar Stone D), from Scott System, Inc., 10777 East 45th Ave., Denver, CO, 80239; ph: (303) 373-2500
- Pattern #16999 (Georgia Ashlar), form Fitzgerald Form Liners, 1341 East Pomona Street, Santa Ana, CA, 92705; ph: (714) 547-6710
- Pattern #1506 (Random Block Ashlar Stone), from Spec Form liners, Inc., 530 East Dyer Road, Santa Ana, CA, 92707; ph: (888) 429-9550

Form liners shall be a high-quality reusable product that attaches easily to the forming system and does not compress more than 1/4 inch when concrete is placed in lined forms at a rate of 10 feet (vertical) per hour. Form liners shall be capable of withstanding anticipated concrete pour pressures without leakage causing physical or visual defects. No joints are allowed within the textured area of a panel.

Form liners shall be strippable without causing concrete surface deterioration or weakness in the substrate. Patching materials shall be mutually compatible with the coloring system to be applied.

00542.14 Release Agent; Wall Ties - Form release agent shall be compatible with form liner system to be used.

Wall ties shall have set break-backs at least 1 inch below the finished concrete surface (bottom of rustication groove), so designed that the device can be disengaged and removed without spalling or damaging the concrete.

00542.15 Quality Control - Provide quality control according to Section 00165 and the following:

(a)Working Drawings - Submit unstamped working drawings according to 00150.35, detailing the stone pattern.

SECTION II. SCHEDULE OF ITEMS

Payment for work done under this contract will be made at the unit prices listed on the inserted sheet or sheets which follow. The quantities given are approximate only, and it is neither expressly nor by implication agreed that the actual amounts of work to be done and paid for will be in accord therewith.

SCHEDULE OF ITEMS

OR138W: DODGE CR/CALAPOOYA CR BRIDGE REPLACEMENTS
CONCRETE ENTERPRISES, INC.

ITEM NO	ITEM DESCRIPTION	UNIT OF MEASURE	QUANTITY	UNIT PRICE (IN FIGURES)	TOTAL (IN FIGURES)
SECTION 0001	TEMPORARY FEATURES AND APPURTENANCES				
0010	0210-0100000A MOBILIZATION	LUMP	ALL	463,000.00	463,000.00
0020	0225-0100000A TEMPORARY PROTECTION AND DIRECTION OF TRAFFIC	LUMP	ALL	5,000.00	5,000.00
0030	0225-0102000J TEMPORARY SIGNS	SQFT	542.00	18.00	9,756.00
0040	0225-0105000E TEMPORARY BARRICADES, TYPE III	EACH	20.00	130.00	2,600.00
0050	0225-0108000F TEMPORARY GUARDRAIL, TYPE 2A REFLECTORIZED	FOOT	737.50	12.10	8,923.75
0060	0225-0110000F TEMPORARY GUARDRAIL, TYPE 3 REFLECTORIZED	FOOT	50.00	25.50	1,275.00
0070	0225-0115000E TEMPORARY GUARDRAIL TERMINALS, NON-FLARED	EACH	5.00	1,000.00	5,000.00
0080	0225-0117000E TEMPORARY GUARDRAIL TRANSITION	EACH	4.00	1,000.00	4,000.00
0090	0225-0145000E TEMPORARY PLASTIC DRUMS	EACH	54.00	50.00	2,700.00
0100	0225-0149000E TEMPORARY FLEXIBLE PAVEMENT MARKERS	EACH	1,450.00	1.00	1,450.00
0110	0225-0153000F TEMPORARY STRIPING	FOOT	8,300.00	0.70	5,810.00
0120	0225-0153200J TEMPORARY PAVEMENT BARS	SQFT	24.00	4.00	96.00
0130	0225-0154000F STRIPE REMOVAL	FOOT	1,600.00	1.27	2,032.00
0140	0225-0158000E PORTABLE TRAFFIC SIGNAL	EACH	1.00	32,000.00	32,000.00

SCHEDULE OF ITEMS

OR138W: DODGE CR/CALAPOOYA CR BRIDGE REPLACEMENTS
CONCRETE ENTERPRISES, INC.

ITEM NO	ITEM DESCRIPTION	UNIT OF MEASURE	QUANTITY	UNIT PRICE (IN FIGURES)	TOTAL (IN FIGURES)
0150	0225-0164000E PORTABLE CHANGEABLE MESSAGE SIGNS	EACH	2.00	2,500.00	5,000.00
0160	0225-0168000T FLAGGERS	HOUR	1,700.00	41.90	71,230.00
0170	0225-0168100T FLAGGER STATION LIGHTING	HOUR	160.00	12.52	2,003.20
0180	0225-0172000T PILOT CARS	HOUR	80.00	50.00	4,000.00
0190	0230-0100000A CONSTRUCT AND REMOVE DETOURS	LUMP	ALL	100,000.00	100,000.00
0200	0250-0102000A TEMPORARY DETOUR BRIDGES	LUMP	ALL	282,500.00	282,500.00
0210	0252-0104000A TEMPORARY WORK BRIDGES	LUMP	ALL	50,000.00	50,000.00
0220	0280-0100000A EROSION CONTROL	LUMP	ALL	4,000.00	4,000.00
0230	0280-0104000R TEMPORARY MULCHING	ACRE	2.80	1,500.00	4,200.00
0240	0280-0106000E CHECK DAM	EACH	16.00	150.00	2,400.00
0250	0280-0113000F SEDIMENT FENCE, UNSUPPORTED	FOOT	5,600.00	1.50	8,400.00
0260	0280-0114000E INLET PROTECTION	EACH	3.00	50.00	150.00
0270	0290-0100000A POLLUTION CONTROL PLAN	LUMP	ALL	500.00	500.00
0280	0290-0102000A WORK CONTAINMENT PLAN AND SYSTEM	LUMP	ALL	50,000.00	50,000.00

SECTION 0002 ROADWORK

SCHEDULE OF ITEMS

OR138W: DODGE CR/CALAPOOYA CR BRIDGE REPLACEMENTS
CONCRETE ENTERPRISES, INC.

ITEM NO	ITEM DESCRIPTION	UNIT OF MEASURE	QUANTITY	UNIT PRICE (IN FIGURES)	TOTAL (IN FIGURES)
0290	0305-0100000A CONSTRUCTION SURVEY WORK	LUMP	ALL	33,250.00	33,250.00
0300	0310-0106000A REMOVAL OF STRUCTURES AND OBSTRUCTIONS	LUMP	ALL	6,500.00	6,500.00
0310	0320-0100000A CLEARING AND GRUBBING	LUMP	ALL	12,500.00	12,500.00
0320	0330-0103000K TOE TRENCH EXCAVATION	CUYD	970.00	15.00	14,550.00
0330	0330-0105000K GENERAL EXCAVATION	CUYD	16,729.00	9.00	150,561.00
0340	0330-0126000K STONE EMBANKMENT	CUYD	860.00	24.00	20,640.00
0350	0331-0106000J 12 INCH SUBGRADE STABILIZATION	SQYD	500.00	18.00	9,000.00
0360	0340-0100000Q WATERING	MGAL	1,510.00	2.00	3,020.00
0370	0350-0100000J DRAINAGE GEOTEXTILE, TYPE 1	SQYD	125.00	5.00	625.00
0380	0350-0104000J RIPRAP GEOTEXTILE, TYPE 2	SQYD	3,100.00	1.25	3,875.00
0390	0350-0105000J SUBGRADE GEOTEXTILE	SQYD	17,100.00	1.00	17,100.00
0400	0370-0101000A OBLITERATING SURFACINGS	LUMP	ALL	6,500.00	6,500.00
0410	0390-0105000K LOOSE RIPRAP, CLASS 50	CUYD	50.00	50.00	2,500.00
0420	0390-0111000K LOOSE RIPRAP, CLASS 200	CUYD	870.00	26.00	22,620.00
0430	0390-0114000K LOOSE RIPRAP, CLASS 700	CUYD	2,200.00	27.00	59,400.00

SECTION 0003 DRAINAGE AND SEWERS

OR138W: DODGE CR/CALAPOOYA CR BRIDGE REPLACEMENTS
CONCRETE ENTERPRISES, INC.

ITEM NO	ITEM DESCRIPTION	UNIT OF MEASURE	QUANTITY	UNIT PRICE (IN FIGURES)	TOTAL (IN FIGURES)
0440	0430-0100120F 12 INCH DRAIN PIPE	FOOT	100.00	50.00	5,000.00
0450	0445-010012AF 12 INCH CULVERT PIPE, 5 FT DEPTH	FOOT	115.00	50.00	5,750.00
0460	0445-010018AF 18 INCH CULVERT PIPE, 5 FT DEPTH	FOOT	145.00	55.00	7,975.00
0470	0445-0700120E SLOPED END SECTIONS, 12 INCH	EACH	3.00	400.00	1,200.00
0480	0460-0100000J PAVED CULVERT END SLOPES	SQFT	49.00	50.00	2,450.00
0490	0470-0311000E CONCRETE INLETS, TYPE D	EACH	1.00	1,100.00	1,100.00
0500	0470-0319000E CONCRETE INLETS, TYPE G-2MA	EACH	2.00	1,850.00	3,700.00

SECTION 0004 BR NO 20861

0510	0501-0100000A BRIDGE REMOVAL WORK	LUMP	ALL	25,000.00	25,000.00
0520	0510-0100000A SHORING, CRIBBING AND COFFERDAMS	LUMP	ALL	20,000.00	20,000.00
0530	0510-0101000A STRUCTURE EXCAVATION	LUMP	ALL	1,000.00	1,000.00
0540	0510-0106000A GRANULAR WALL BACKFILL	LUMP	ALL	2,000.00	2,000.00
0550	0512-0100000A FURNISH DRILLING EQUIPMENT	LUMP	ALL	21,500.00	21,500.00
0560	0512-0101000A DRILLED SHAFT CONCRETE	LUMP	ALL	22,500.00	22,500.00
0570	0512-0103000A DRILLED SHAFT REINFORCEMENT	LUMP	ALL	18,000.00	18,000.00

SCHEDULE OF ITEMS

OR138W: DODGE CR/CALAPOOYA CR BRIDGE REPLACEMENTS
CONCRETE ENTERPRISES, INC.

ITEM NO	ITEM DESCRIPTION	UNIT OF MEASURE	QUANTITY	UNIT PRICE (IN FIGURES)	TOTAL (IN FIGURES)
0580	0512-0105000F CSL TEST ACCESS TUBES	FOOT	400.00	5.00	2,000.00
0590	0512-0106000E CSL TESTS	EACH	1.00	2,500.00	2,500.00
0600	0512-0114000F DRILLED SHAFT EXCAVATION, 96 INCH DIAMETER	FOOT	50.00	462.00	23,100.00
0610	0512-0115000F PERMANENT SHAFT CASINGS	FOOT	7.70	1,040.00	8,008.00
0620	0520-0100000A FURNISH PILE DRIVING EQUIPMENT	LUMP	ALL	7,500.00	7,500.00
0630	0520-0110000F FURNISH HP 12 X 84 STEEL PILES	FOOT	560.00	38.42	21,515.20
0640	0520-0209000E DRIVE HP 12 X 84 STEEL PILES	EACH	14.00	500.00	7,000.00
0650	0520-0330000E REINFORCED PILE TIPS	EACH	14.00	143.00	2,002.00
0660	0520-0406000E HP 12 X 84 STEEL PILE SPLICES	EACH	2.00	250.00	500.00
0670	0530-0100000A REINFORCEMENT	LUMP	ALL	160,000.00	160,000.00
0680	0540-0301000A GENERAL STRUCTURAL CONCRETE, CLASS 3300	LUMP	ALL	103,500.00	103,500.00
0690	0540-0307000A GENERAL STRUCTURAL CONCRETE, CLASS HPC4000	LUMP	ALL	164,500.00	164,500.00
0700	0540-0401000J SAW CUT TEXTURING	SQYD	1,475.00	5.50	8,112.50
0710	0545-0100000J REINFORCED CONCRETE BRIDGE END PANELS	SQYD	314.00	198.00	62,172.00
0720	0560-0102000A STEEL PLATE GIRDER	LUMP	ALL	620,000.00	620,000.00

OR138W: DODGE CR/CALAPOOYA CR BRIDGE REPLACEMENTS
CONCRETE ENTERPRISES, INC.

ITEM NO	ITEM DESCRIPTION	UNIT OF MEASURE	QUANTITY	UNIT PRICE (IN FIGURES)	TOTAL (IN FIGURES)
0730	0585-0106000A POURED JOINT SEALS	LUMP	ALL	3,000.00	3,000.00
0740	0587-0120000A TYPE "F" CONCRETE RAIL	LUMP	ALL	51,000.00	51,000.00

SECTION 0005 BR NO 21163

0750	0501-0100000A BRIDGE REMOVAL WORK	LUMP	ALL	20,000.00	20,000.00
0760	0510-0100000A SHORING, CRIBBING AND COFFERDAMS	LUMP	ALL	10,000.00	10,000.00
0770	0510-0101000A STRUCTURE EXCAVATION	LUMP	ALL	1,000.00	1,000.00
0780	0510-0108000A GRANULAR STRUCTURE BACKFILL	LUMP	ALL	2,000.00	2,000.00
0790	0520-0100000A FURNISH PILE DRIVING EQUIPMENT	LUMP	ALL	7,000.00	7,000.00
0800	0520-0110000F FURNISH HP 12 X 84 STEEL PILES	FOOT	440.00	41.00	18,040.00
0810	0520-0209000E DRIVE HP 12 X 84 STEEL PILES	EACH	16.00	438.00	7,008.00
0820	0520-0330000E REINFORCED PILE TIPS	EACH	16.00	125.00	2,000.00
0830	0520-0406000E HP 12 X 84 STEEL PILE SPLICES	EACH	3.00	160.00	480.00
0840	0530-0100000A REINFORCEMENT	LUMP	ALL	90,000.00	90,000.00
0850	0540-0203000A DECK CONCRETE, CLASS HPC4000	LUMP	ALL	59,500.00	59,500.00
0860	0540-0301000A GENERAL STRUCTURAL CONCRETE, CLASS 3300	LUMP	ALL	59,500.00	59,500.00

OR138W: DODGE CR/CALAPOOYA CR BRIDGE REPLACEMENTS
CONCRETE ENTERPRISES, INC.

ITEM NO	ITEM DESCRIPTION	UNIT OF MEASURE	QUANTITY	UNIT PRICE (IN FIGURES)	TOTAL (IN FIGURES)
0870	0540-0401000J SAW CUT TEXTURING	SQYD	558.00	5.40	3,013.20
0880	0545-0100000J REINFORCED CONCRETE BRIDGE END PANELS	SQYD	223.00	198.00	44,154.00
0890	0560-0102000A ERECTING STEEL STRUCTURE	LUMP	ALL	40,000.00	40,000.00
0900	0587-0120000A TYPE "F" CONCRETE RAIL	LUMP	ALL	22,500.00	22,500.00

SECTION 0006 BR NO 21162

0910	0501-0100000A BRIDGE REMOVAL WORK	LUMP	ALL	20,000.00	20,000.00
0920	0510-0100000A SHORING, CRIBBING AND COFFERDAMS	LUMP	ALL	50,000.00	50,000.00
0930	0510-0101000A STRUCTURE EXCAVATION	LUMP	ALL	5,000.00	5,000.00
0940	0510-0106000A GRANULAR WALL BACKFILL	LUMP	ALL	1,000.00	1,000.00
0950	0520-0100000A FURNISH PILE DRIVING EQUIPMENT	LUMP	ALL	20,000.00	20,000.00
0960	0520-0112000F FURNISH HP 14 X 89 STEEL PILES	FOOT	390.00	42.50	16,575.00
0970	0520-0211000E DRIVE HP 14 X 89 STEEL PILES	EACH	12.00	590.00	7,080.00
0980	0520-0330000E REINFORCED PILE TIPS	EACH	12.00	170.00	2,040.00
0990	0520-0408000E HP 14 X 89 STEEL PILE SPLICES	EACH	2.00	250.00	500.00
1000	0530-0100000A REINFORCEMENT	LUMP	ALL	25,000.00	25,000.00

SCHEDULE OF ITEMS

OR138W: DODGE CR/CALAPOOYA CR BRIDGE REPLACEMENTS
CONCRETE ENTERPRISES, INC.

ITEM NO	ITEM DESCRIPTION	UNIT OF MEASURE	QUANTITY	UNIT PRICE (IN FIGURES)	TOTAL (IN FIGURES)
1010	0540-0301000A GENERAL STRUCTURAL CONCRETE, CLASS 3300	LUMP	ALL	32,500.00	32,500.00
1020	0545-0100000J REINFORCED CONCRETE BRIDGE END PANELS	SQYD	199.00	198.00	39,402.00
1030	0550-0139000F 30 INCH PRECAST PRESTRESSED SLABS	FOOT	933.00	250.00	233,250.00
1040	0587-0120000A TYPE "F" CONCRETE RAIL	LUMP	ALL	17,000.00	17,000.00
1050	0591-0100000J WARRANTED WATERPROOFING MEMBRANE	SQFT	3,507.00	2.50	8,767.50
1060	0596-0104000J RETAINING WALL, MSE	SQFT	1,636.00	65.00	106,340.00

SECTION 0007 BASES

1070	0620-0104000J COLD PLANE PAVEMENT REMOVAL, 0 - 2 INCHES DEEP	SQYD	1,570.00	4.50	7,065.00
1080	0620-0120000J COLD PLANE PAVEMENT REMOVAL, 2 INCHES DEEP	SQYD	1,133.00	4.50	5,098.50
1090	0641-0102000M AGGREGATE BASE	TON	10,600.00	14.18	150,308.00

SECTION 0008 WEARING SURFACES

1100	0745-0322000M LEVEL 3, 1/2 INCH DENSE LIME TREATED HMAC	TON	7,120.00	61.05	434,676.00
1110	0745-0334000M LEVEL 3, 1/2 INCH DENSE LIME TREATED HMAC IN LEVELING	TON	100.00	61.05	6,105.00
1120	0745-0620000M PG 64-22 ASPHALT IN HMAC	TON	426.00	0.01	4.26

OR138W: DODGE CR/CALAPOOYA CR BRIDGE REPLACEMENTS
CONCRETE ENTERPRISES, INC.

ITEM NO	ITEM DESCRIPTION	UNIT OF MEASURE	QUANTITY	UNIT PRICE (IN FIGURES)	TOTAL (IN FIGURES)
1130	0749-0100000E EXTRA FOR ASPHALT APPROACHES	EACH	3.00	400.00	1,200.00

SECTION 0009 PERMANENT TRAFFIC SAFETY AND GUIDANCE DEVICES

1140	0810-0104000F GUARDRAIL, TYPE 2A	FOOT	2,187.50	18.05	39,484.38
1150	0810-0107000F GUARDRAIL, TYPE 3	FOOT	150.00	50.00	7,500.00
1160	0810-0120000E GUARDRAIL ANCHORS, TYPE 1 MODIFIED	EACH	8.00	500.00	4,000.00
1170	0810-0122000E GUARDRAIL END PIECES, TYPE B	EACH	4.00	75.00	300.00
1180	0810-0126000E GUARDRAIL TRANSITION	EACH	12.00	2,250.00	27,000.00
1190	0810-0129000E GUARDRAIL TERMINALS, NON-FLARED	EACH	6.00	2,250.00	13,500.00
1200	0810-0133000E EXTRA FOR 8 FOOT POSTS	EACH	61.00	20.00	1,220.00
1210	0820-0100000F CONCRETE BARRIER	FOOT	75.00	40.00	3,000.00
1220	0840-0100000E DELINEATORS, TYPE 1	EACH	30.00	40.00	1,200.00
1230	0840-0106000E MILEPOST MARKER POSTS	EACH	2.00	80.00	160.00
1240	0855-0102000E BI-DIRECTIONAL YELLOW TYPE 1 MARKERS	EACH	108.00	5.50	594.00
1250	0865-0119000F THERMOPLASTIC, NON-PROFILE, 120 MILS, SPRAYED	FOOT	14,800.00	1.00	14,800.00
1260	0867-0145000J PAVEMENT BAR, TYPE B	SQFT	50.00	19.00	950.00

SECTION 0010 PERMANENT TRAFFIC CONTROL AND ILLUMINATION SYSTEMS

OR138W: DODGE CR/CALAPOOYA CR BRIDGE REPLACEMENTS
CONCRETE ENTERPRISES, INC.

ITEM NO	ITEM DESCRIPTION	UNIT OF MEASURE	QUANTITY	UNIT PRICE (IN FIGURES)	TOTAL (IN FIGURES)
1270	0905-0100000A REMOVE EXISTING SIGNS	LUMP	ALL	1,500.00	1,500.00
1280	0910-0100000K WOOD SIGN POSTS	FBM	221.00	7.00	1,547.00
1290	0940-0113000J TYPE "G" SIGNS IN PLACE	SQFT	51.80	30.00	1,554.00
1300	0940-0121000J TYPE "R" SIGNS IN PLACE	SQFT	9.00	18.00	162.00
1310	0940-0134000J TYPE "Y1" SIGNS IN PLACE	SQFT	9.00	18.00	162.00

SECTION 0011 RIGHT-OF-WAY DEVELOPMENT AND CONTROL

1320	1030-0108000R PERMANENT SEEDING	ACRE	4.00	3,000.00	12,000.00
1330	1040-0107000K SOIL CONDITIONER	CUYD	111.00	40.00	4,440.00
1340	1040-0109000E CONIFER TREES, SEEDLINGS	EACH	180.00	4.00	720.00
1350	1040-0147000E DECIDUOUS TREES, NO. 1 CONTAINER	EACH	1.00	19.54	19.54
1360	1040-0153000E SHRUBS, NO. 1 CONTAINER	EACH	260.00	10.00	2,600.00
1370	1040-0161000E TUBELING PLANTS, 0.04 GAL CONTAINER	EACH	1,045.00	5.00	5,225.00
1380	1070-0100000E SINGLE MAILBOX SUPPORTS	EACH	1.00	200.00	200.00
1390	1070-0101000E MULTIPLE MAILBOX SUPPORTS	EACH	3.00	300.00	900.00
1400	1070-0102000E MAILBOX CONCRETE COLLARS	EACH	3.00	100.00	300.00

SECTION 0012 ADDED BID ITEMS

SCHEDULE OF ITEMS

OR138W: DODGE CR/CALAPOOYA CR BRIDGE REPLACEMENTS
CONCRETE ENTERPRISES, INC.

ITEM NO	ITEM DESCRIPTION	UNIT OF MEASURE	QUANTITY	UNIT PRICE (IN FIGURES)	TOTAL (IN FIGURES)
1410	1040-0123000E DECIDUOUS TREES, LARGE	EACH	80.00	40.00	3,200.00
1420	1040-0121000E DECIDUOUS TREES, SEEDLINGS	EACH	190.00	5.00	950.00
1430	1040-0183000E WETLAND PLANTS, PLUGS	EACH	90.00	5.00	450.00
1440	1040-0180000E PLANT CUTTINGS, LARGE	EACH	115.00	4.00	460.00
1450	1092-9Z90000J BIOFILTRATION SWALES	SQYD	210.00	21.00	4,410.00
1460	1092-9Z90000J FILTER STRIPS	SQYD	3,559.00	7.70	27,404.30
1470	1091-9Z90000E TYPE S-2 MARKERS	EACH	6.00	83.40	500.40
	TOTAL BID				4,631,770.73

INSERT TAB

Plans

43V-105

INDEX OF SHEETS	
SHEET NO.	DESCRIPTION
1	Title Sheet
1A	Index Of Sheets Cont'd. & Std. Dwg. Nos.

STATE OF OREGON
DEPARTMENT OF TRANSPORTATION
PLANS FOR PROPOSED PROJECT

GRADING, PAVING & STRUCTURES

OR138W: DODGE CR/CALAPOOYA CR BRIDGE REPLACEMENTS

ELKTON - SUTHERLIN HIGHWAY
DOUGLAS COUNTY
NOVEMBER 2010

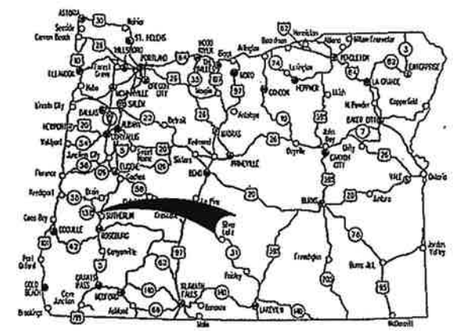

Overall Length Of Project – 0.70 Miles

BEGINNING OF PROJECT
X-BRS-S231 (011)
STA. "L" 1084+00.0 (M.P. 20.74)

END OF PROJECT
X-BRS-S231 (011)
STA. "L"1162+10.00 (M.P. 22.22)

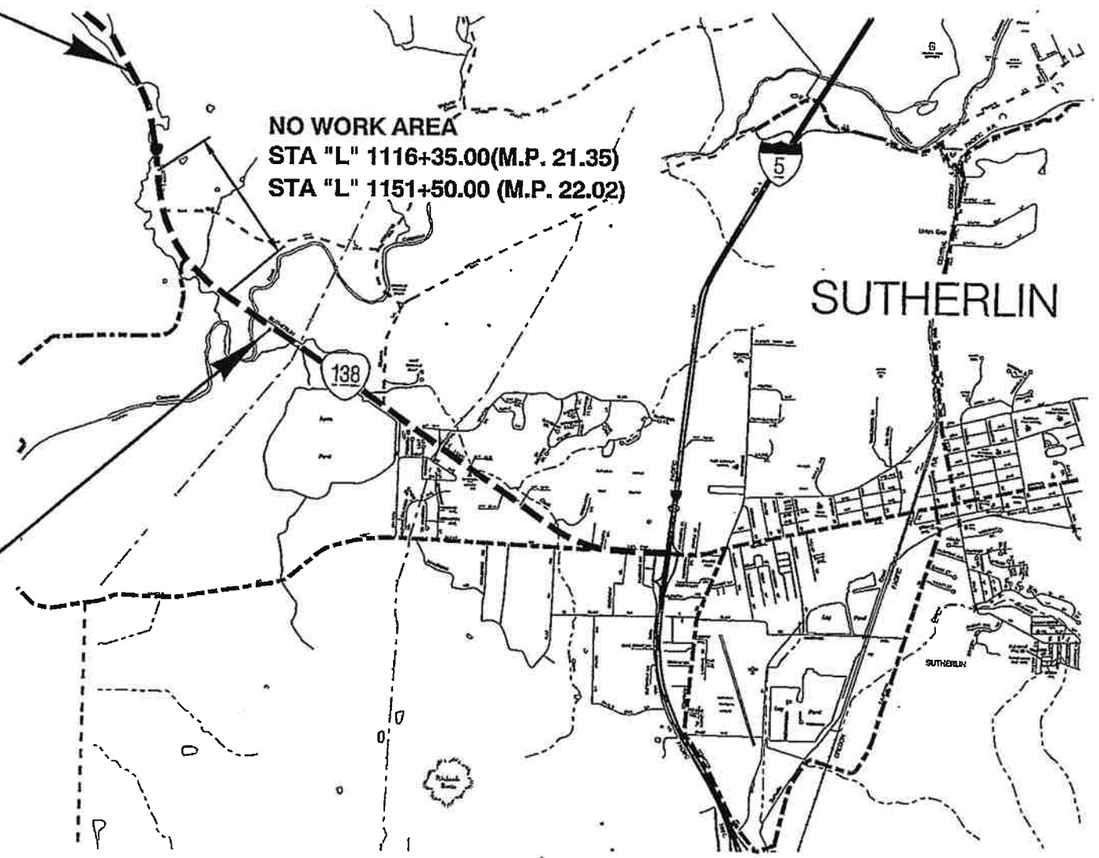

T. 25S., R. 6W., W.M.

ATTENTION:
Oregon Law Requires You To Follow Rules Adopted By The Oregon Utility Notification Center. Those Rules Are Set Forth In OAR 952-001-0010 Through OAR 952-001-0090. You May Obtain Copies Of The Rules By Calling The Center. (Note: The Telephone Number For The Oregon Utility Center Is (503) 232-1987.)

LET'S ALL WORK TOGETHER TO MAKE THIS JOB SAFE

OREGON TRANSPORTATION COMMISSION

Gail Achterman	CHAIR
Michael Nelson	VICE-CHAIR
Mary Olson	COMMISSIONER
Alan Brown	COMMISSIONER
David Lohman	COMMISSIONER
Matthew L. Garrett	DIRECTOR OF TRANSPORTATION

These plans were developed using ODOT design standards. Exceptions to these standards, if any, have been submitted and approved by the ODOT Chief Engineer or their delegated authority.

Approving Authority: M. Thompson 8-30-10
Signature & date

Mark Thompson Reg. 3 Tech. Ctr. Mgr.
Print name and title

Concurrence by ODOT Chief Engineer

OR138W: DODGE CR/CALAPOOYA CR BRIDGE REPLACEMENTS
ELKTON - SUTHERLIN HIGHWAY
DOUGLAS COUNTY

FEDERAL HIGHWAY ADMINISTRATION	PROJECT NUMBER	SHEET NO.
OREGON DIVISION	X-BRS-S231 (011)	1

INDEX OF SHEETS, CONT'D.

SHEET NO.	DESCRIPTION
1B	Survey Control Sheet
2 thru 2A-5	Typical Sections
2B thru 2B-6	Details
2C thru 2C-7	Traffic Control
2D	Pipe Data
3	Alignment & Right of Way
3A	General Construction
3B	Profile
4	Alignment & Right of Way
4A	General Construction
4B	Profile
5	Alignment & Right of Way
5A	General Construction
5B	General Constrution Notes
5C	Profile
6	Alignment & Right of Way
6A	General Construction
6B	Profile
7	General Construction
7A	Profile
8	General construction
9	General Construction
9A	Profile

SHEET NO.	DESCRIPTION
	GEO/HYDRO/ENVIRONMENTAL
GA	Erosion Control Plan
GA-2	Erosion Control Plan
GA-3	Erosion Control Plan
GA-4	Erosion Control Plan
GN	Planting Plan
GN-2	Planting Plan
GN-3	Planting Plan
GN-4	Planting Plan

DRAWING NO.	DESCRIPTION
	#21162 BRIDGE
84739	Plan and Elevation
84740	General Notes and Miscellaneous
84741	Foundation Data
84742	Footing Plan
84743	Deck Plan
84744	Typical Deck Section & Girder Schedule
84745	30" Precast Prestressed Slab
84746	Bent 2 Details
84747	Wingwall Details
84748	Retaining Wall - Plan and Elevation
84749	Wall Details

DRAWING NO.	DESCRIPTION
	#21163 BRIDGE
84765	Plan and Elevation
84766	General Notes & Miscellaneous
84767	Foundation Data
84768	Stage Construction Details
84769	Footing Plan
84770	Deck Plan
84771	Typical Deck Section
84772	Plan and Elevation - Steel Plate Girder
84773	Camber Details - Steel Plate Girder
84774	Miscellaneous Welding Details
84775	Intermediate Cross Frames
84776	Intermediate & End Cross Frames
84777	Plan and Elevation - Bent 2 (Bent 1 Similar)
84778	Bent Details
84779	Wingwall & Pay Limit Details

DRAWING NO.	DESCRIPTION
	#20861 BRIDGE
84334	Plan and Elevation
84335	General Notes & Construction Sequence
84336	Foundation Data
84337	Footing Plan
84338	Deck Plan
84339	Typical Deck Section
84340	Framing Plan - Span 1
84341	Framing Plan - Span 2
84342	Steel Girder - Span 1
84343	Steel Girder - Span 2
84344	Steel Girder Splice
84345	Welding Details
84346	Bent Cross Frames
84347	Intermediate Cross Frame
84348	Bent 3 (Bent 1 similar)
84349	Bent 1 Section (Bent 3 Similar)
84350	Wingwalls
84351	Bent 2
84352	Bent 2 Bearings And Shear Lug
84353	Concrete Placement & Construction Details

	PERMANENT PAVEMENT MARKINGS
ST-1	Striping Plan (Dodge Creek)
ST-2	Striping Plan (Calapooya Creek)

	PERMANENT SIGNING
S-12246 thru S-12248	Signing Plan
S-12249	Signing Details
S-12250	Sign & Post Data Table

Standard Dwg. Nos.

RD100	- Mailbox Support
RD101	- Mailbox Installation
RD140	- Roadway Cross Slopes Superelevated Sections
1 RD300	- Trench Backfill, Bedding, Pipe Zone And Mult. Installations
RD312	- Subsurface Drain
RD316	- Sloped Ends For Metal Pipe
RD318	- Sloped Ends For Concrete Pipe
RD320	- Paved End Slope For Culverts 60" Maximum Pipe Size
RD326	- Coupling Bands For Corrugated Metal Pipe
RD364, RD370	- Concrete Inlets
1 RD380, RD386, RD388, RD390	- Pipe Fill Height Tables
RD400, RD405, RD410, RD415, RD420, RD450	- Guardrail
RD500	- Precast Concrete Barrier Pin And Loop Assembly
RD515	- Median Barrier Anchoring Details
RD516	- Securing Concrete Barrier To Roadway
RD520	- Cast-In-Place Conc. Barrier Transition To Bridge Rail
RD526	- Standard Concrete Barrier Buried In Backslope
RD530	- Guardrail Transition To Concrete Barrier
RD610	- Asphalt Pavement Details
RD715	- Approaches And Non-Sidewalk Driveways
RD1005	- Check Dams
1 RD1010, RD1015	- Inlet Protection
RD1025	- Sediment Barrier
RD1040	- Sediment Fence
BR165	- Bridge End Panel
BR200	- Concrete Bridge Rail Type F
BR203	- Transition Concrete Bridge Rail To Guardrail
BR310	- Bulb-T Beam Girders
BR422	- 30" Precast Prestressed Slab
BR445	- Precast Prestressed Boxes & Slabs
BR705	- Standard Retaining Walls Front Face Battered 1" Per Ft.
1 TM200	- Sign Installation Details
TM201	- Miscellaneous Sign Placement Details
TM204	- Flag Board Mounting Details
1 TM221, TM222	- Milepost Marker Details
TM500, TM502	- Pavement Marking Standard Details
TM521	- Durable Pavement Markings
TM530	- Intersection Pavement Markings
TM560	- Alignment Layout
TM570	- Traffic Delineators
TM571	- Traffic Delineators Steel Post Details
1 TM635	- Breakaway Sign & Luminaire Supports
TM670	- Wood Post Sign Supports
TM671	- 3 Second Gust Wind Speed Isotach
TM800	- Tables, Abrupt Edge And PCMS Details
1 TM810	- Temporary Reflective Pavement Markers
TM820	- Temporary Barricades
TM821	- Temporary Sign Supports
TM830	- Temporary Concrete Barrier And Rumble Strips
TM831	- Temporary Impact Attenuators
TM850	- 2-Lane, 2 Way Roadways
TM870	- Bridge Construction

R/W Map No. 11B-4-7 and 7B-12-4

No.	DATE	REVISIONS	BY
1	10-11-10	Added standard drawing numbers	

OR138W: DODGE CR/CALAPOOYA CR BRIDGE REPLACEMENTS

ELKTON - SUTHERLIN HIGHWAY
DOUGLAS COUNTY

FEDERAL HIGHWAY ADMINISTRATION	PROJECT NUMBER	SHEET NO.
OREGON DIVISION	X-BRS-S231 (011)	1A

Sec. 14, T. 25S, R. 6W, W.M.
CALAPOOYA BRIDGE

43V-105

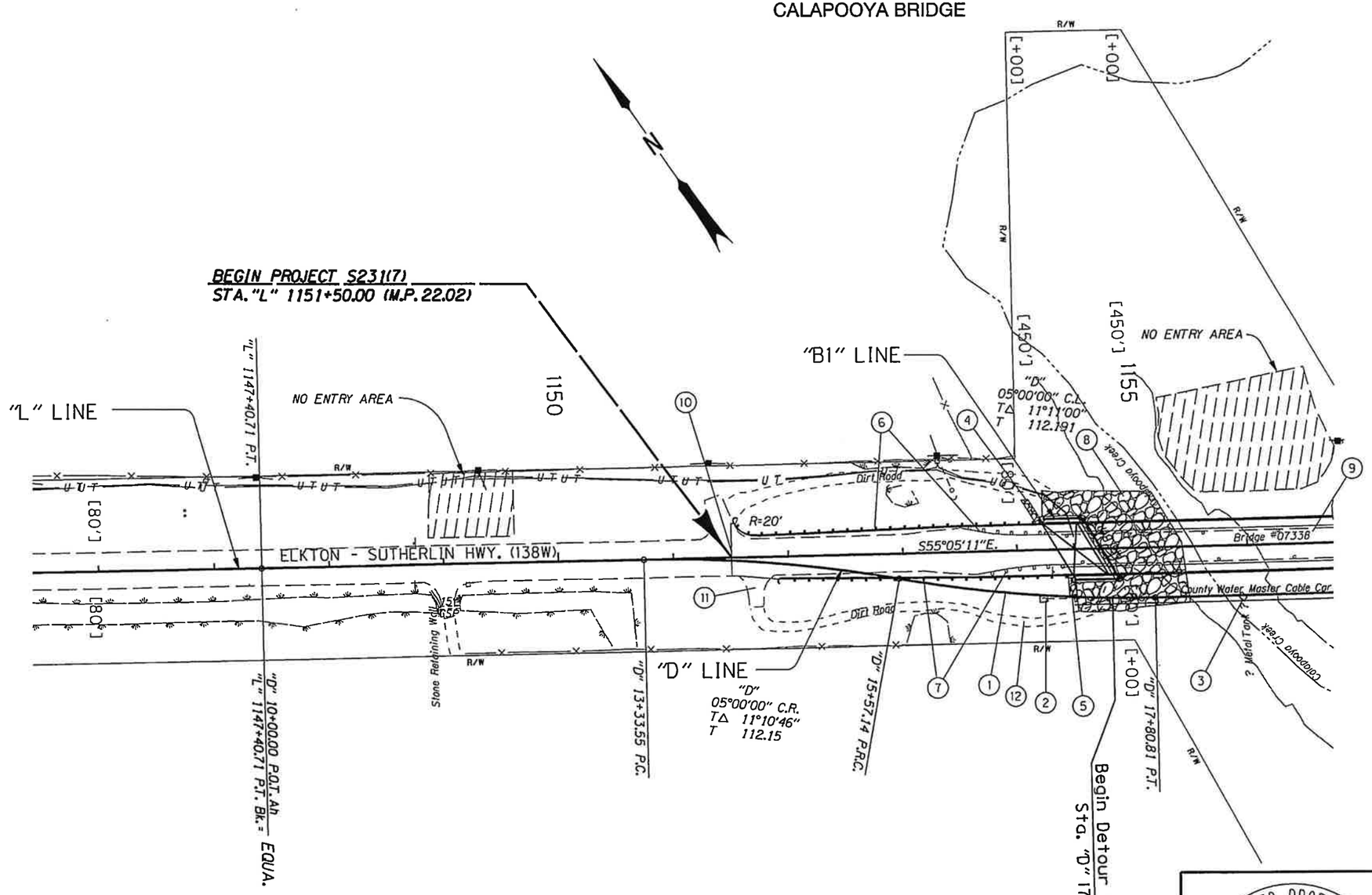

(1) Sta. "D"14+29.00 to Sta. "D"24+00.00
Construct detour
Remove detour
(For Detour Plan, see sht. 9)

(2) Sta. "L"1154+19.32 to Sta. "L"1157+96.05, 43.2' Rt.
Remove gauge station

(3) Sta. "L"1155+90.0, 44.5'Rt.
Remove metal tank

(4) Sta. "L"1154+20.0, Lt.
Const. loose riprap ditch - 14.4 C.Y.
(Class 50)
(For details, see sht. 2B-6)

(5) Sta. "L"1154+49.5, Rt.
Const. loose riprap ditch - 18 C.Y.
(Class 50)
(For details, see sht. 2B-6)

(6) Sta. "L"1151+51.89 to Sta. "L"1154+22.73, Lt.
Remove guardrail - 80.5'
Const. guardrail - 225' (type 2A)
25' (type 2A) R=20'
12.5' (type 3)
Const. guardrail to bridge transition
Flare rate = 0, W = 0, E = 2'
Const. anchor - 2 (Type 1, Mod)
Inst. end piece (Type B)
(For details, see sht. 2B-3)

(7) Sta. "L"1151+78.55 to Sta. "L"1154+48.91, Rt.
Remove guardrail - 80.5'
Const. guardrail - 187.5'(type 2A)
- 12.5' (type 3)
Const. guardrail to bridge transition
Flare rate = 0, W = 0, E = 2'
Const. guardrail terminal, non-flared (L=37.5')

(8) Sta. "B1"0+00 to Sta. "B1"1+35.83
Constr. Class 700 riprap revetment -1200 C.Y.
(For details, see sht. 2B-6)

(9) Remove Bridge #07338
Const. Bridge #20861
(For bridge dwgs. see sht. 1A)

(10) Const. Pvmt. match
(For details see sht. 2B-2)

(11) Remove access

(12) Obliterate roadway

Note:
1. Guardrail design is based on a terminal length of 37.5'. If longer terminal is used, reduce the length of type 2A guardrail accordingly.

2. For Earth work distribution see sht. 7A

REGISTERED PROFESSIONAL ENGINEER
64309PE
OREGON
MAY 9, 2006
JAMES PATRIC BURFORD
RENEWS DATE: 12-31-2011

OREGON DEPARTMENT OF TRANSPORTATION

REGION 3 - TECHNICAL CENTER

OR138W: DODGE CR/CALAPOOYA CR
BRIDGE REPLACEMENTS
ELKTON - SUTHERLIN HIGHWAY
DOUGLAS COUNTY

Design Team Leader - James P. Burford
Designed By - Richard Coffel
Drafted By - Linda Coffel

GENERAL CONSTRUCTION

SHEET NO. 7

F:\ODOT_DATA\Projects\15970_Calapooya creek bridge\roadway\14813.pl1 :: Default 8/30/2010 12:45:47 PM hwye32v

1:1200 - 001

Sec. 14, T. 25S, R. 6W, W.M.
CALAPOOYA BRIDGE

43V-105

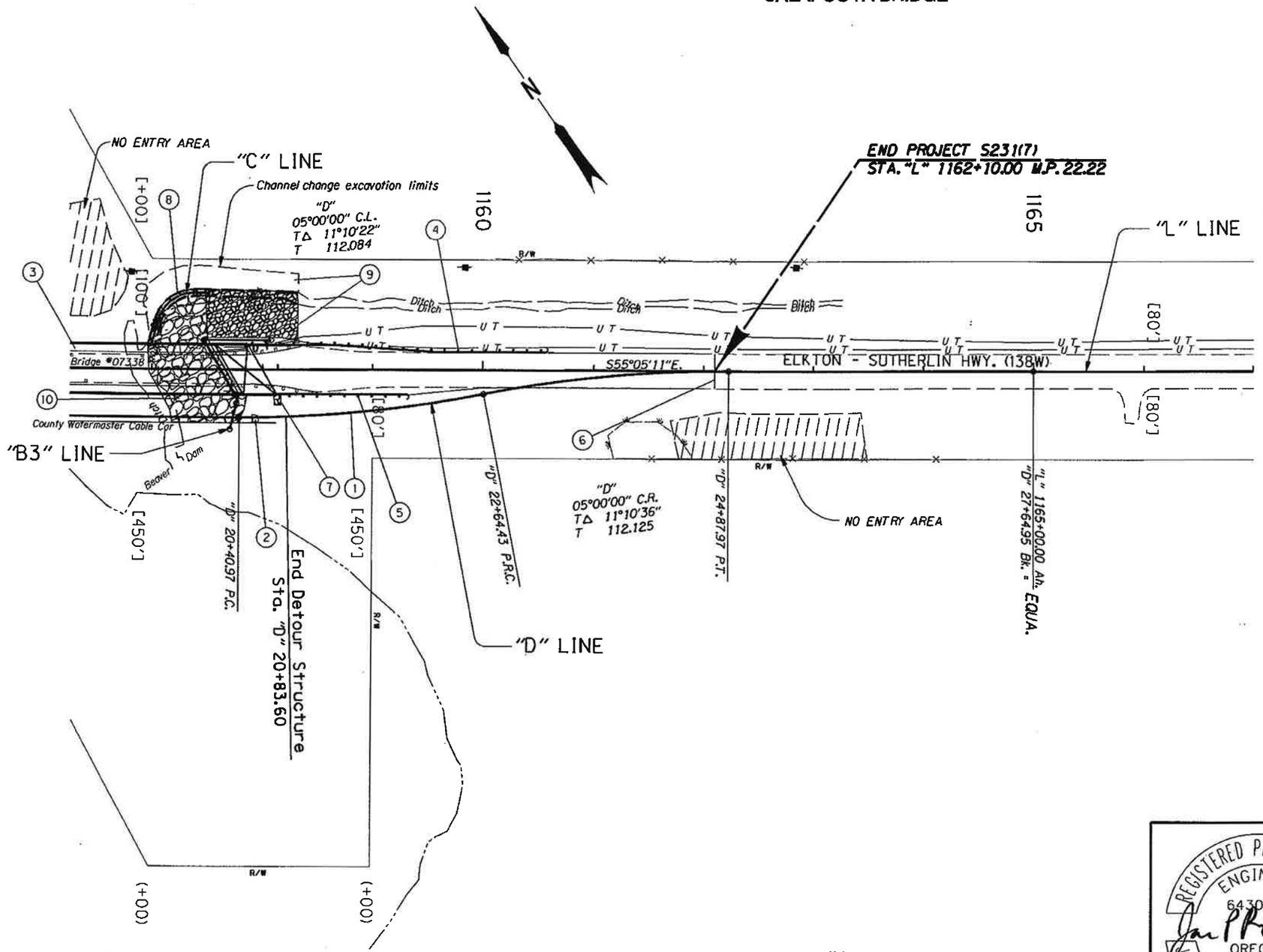

1. See sht. 7, note 1
2. See sht. 7, note 2
3. See sht. 7, note 8
4. Sta. "L"1157+86.09 to Sta. "L"1160+56.74. Lt.
   Remove guardrail - 80.5'
   Const. guardrail - 200' (type 2A)
   - 12.5' (type 3)
   Extra for 8' guardrail posts - 61
   Const. guardrail to bridge transition
   Const. guardrail terminal, non-flared (L= 37.5')
5. Sta. "L"1158+12.27 to Sta. "L"1159+30.69, Rt.
   Remove guardrail - 80.5'
   Const. guardrail - 50' (type 2A)
   - 12.5' (type 3)
   Const. guardrail to bridge transition
   Flare rate = O. W = O. E = 2'
   Const. guardrail terminal, non-flared (L= 37.5')
6. Const. pvmt. match
   (For details see sht. 2B-2)
7. Sta. "L"1158+13.0 Rt.
   Const. loose riprap inlay - 4 C. Y.
   (Class 50)
   (For details, see sht. 2B-6)
8. Sta. "C"0+00 to "C"0+83.58
   Const. channel change
9. Sta. "L"1157+52.30 to Sta. "L"1158+31.67 Lt.
   Const. channel change
   Match channel change to extg. channel
10. Sta. "B3"0+55.23 to Sta. "B3"1+50.31
    Const. Class 700 riprap revetment - 970 C.Y.
    (For details, see sht. 2B-6)

No.	DATE	REVISIONS	BY
1	10-11-10	Changed Rt. to Lt.	B

Note:
Guardrail design is based on a 37.5' end terminal.
Contractor is responsible for design adjustments if another terminal is used.

REGISTERED PROFESSIONAL ENGINEER
64309PE
OREGON
MAY 9, 2000
JAMES PATRIC BURFORD
RENEWS DATE: 12-31-2011

OREGON DEPARTMENT OF TRANSPORTATION
REGION 3 - TECHNICAL CENTER

OR138W: DODGE CR/CALAPOOYA CR
BRIDGE REPLACEMENTS
ELKTON - SUTHERLIN HIGHWAY
DOUGLAS COUNTY

Design Team Leader - James P. Burford
Designed By - Richard Coffel
Drafted By - Linda Coffel

GENERAL CONSTRUCTION

SHEET NO. 8

F:\ODOT_DATA\Projects\15970_Calapooya creek bridge\roadway\14813.pl1 :: Default 10/11/2010 9:09:30 AM hwye32v

1:1200 - 002

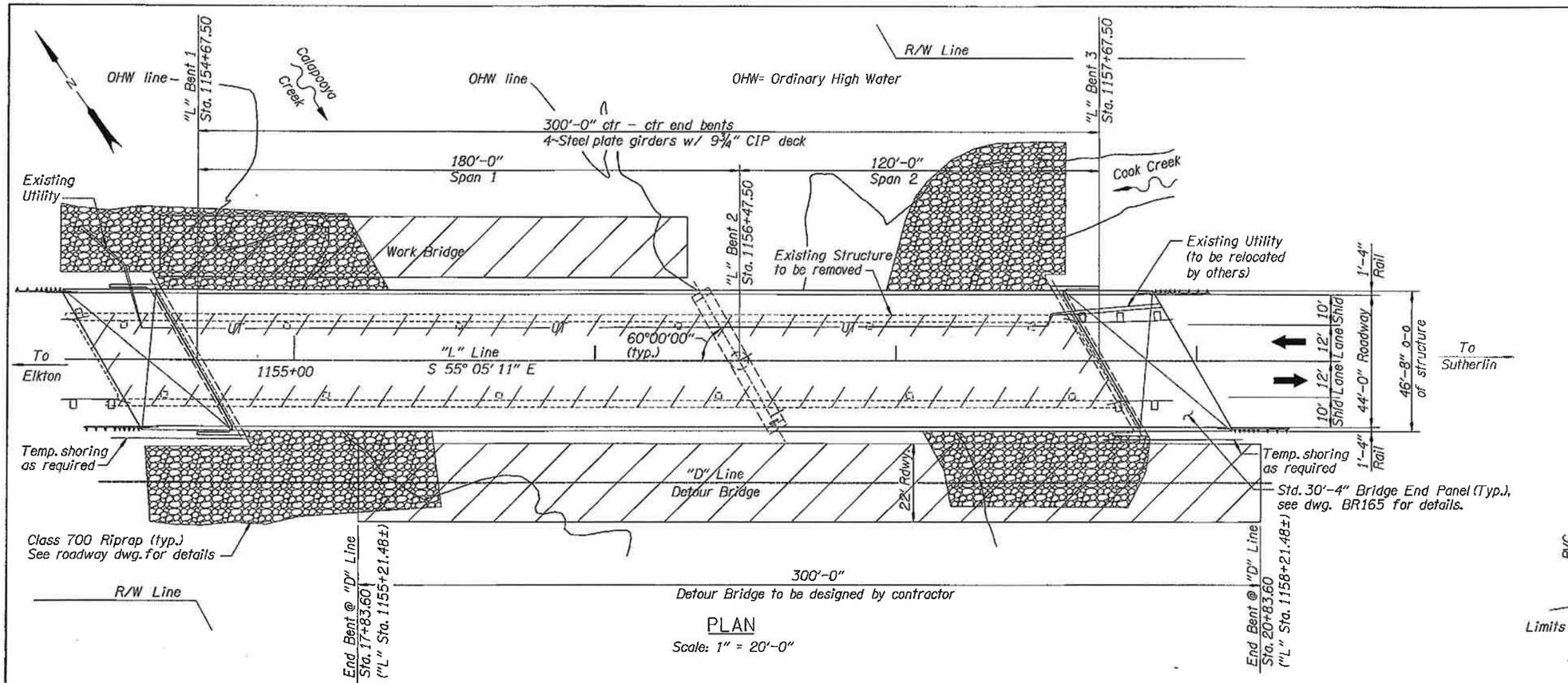

PLAN

Scale: 1" = 20'-0"

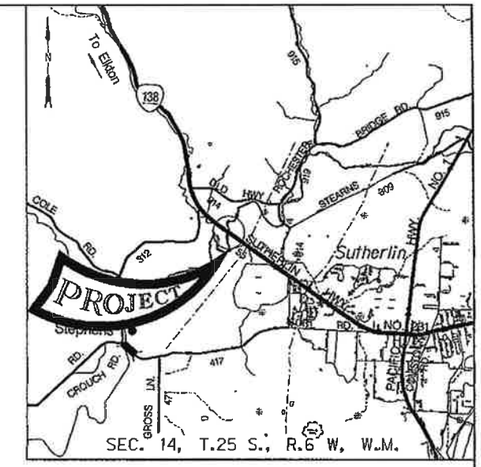

LOCATION MAP

No Scale

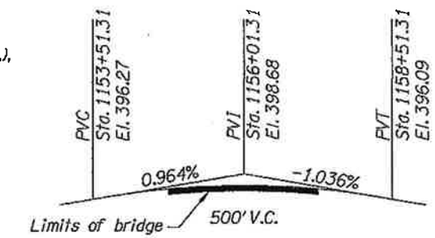

"L" GRADE LINE DIAGRAM

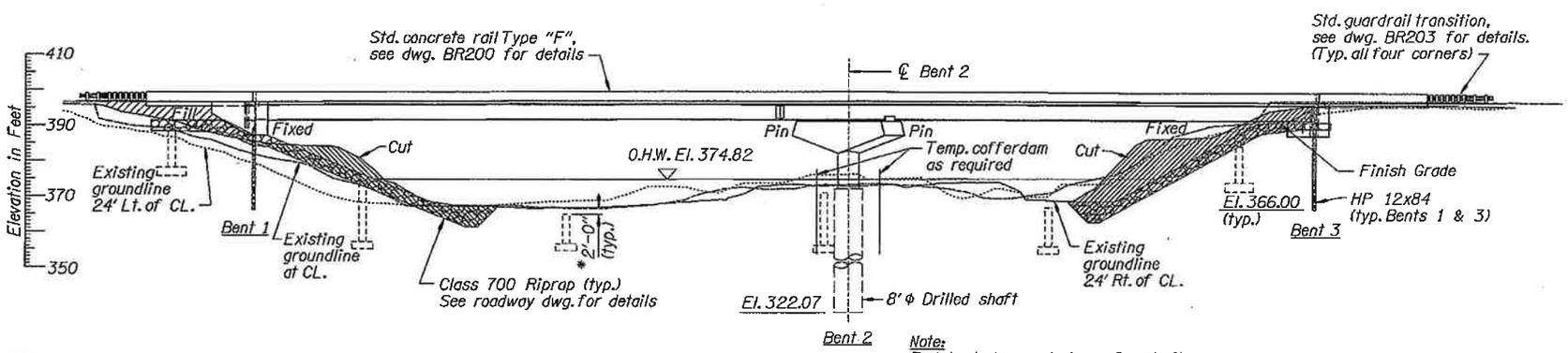

ELEVATION

Scale: 1" = 20'-0"

Note:
End bent skew not shown for clarity.

HYDRAULIC DATA				
ITEMS	(UNITS)	DESIGN FLOOD	BASE FLOOD	MAX. PROBAB. FLOOD
DISCHARGE	ft^3/s	33,000	37,300	50,000
RECURRENCE INTERVAL	(YRS.)	50	100	500
H.W. ELEVATION AT UPSTREAM FACE OF BRIDGE	ft	388.2	389.5	393.0
BACKWATER	ft	0.7	0.8	1.7

For General Notes see dwg. 84335

Note:
Elevations shown are based on North American Vertical Datum, 1988.

*Remove existing columns 2'-0" below finish grade. Leave existing footings in place.

Existing bridge #07338 dwgs. for information only: 10392-10397, 37320, 37258, 37352

SCALE WARNING
If scale bar doesn't measure one inch then drawing is not to scale

DATE	REVISION	BY

ACCOMPANIED BY DWGS. 84335 thru 84353, BR165, BR200, BR203

DRAFTER: E. Leon
DESIGNER: Robert Kaspari
CHECKER: Steve Garlick
REVIEWER: R. Grubbs

STRUCTURAL REGISTERED PROFESSIONAL ENGINEER 12560 OREGON JULY 13, 1984 ROBERT V. KASPARI
RENEWS: 6/30/2011

OREGON DEPARTMENT OF TRANSPORTATION
BRIDGE ENGINEERING HEADQUARTERS
355 Capitol St NE, Rm 301
Salem, OR 97301-3871
(503) 986-4200

STRUCTURE NO. 20861
DATE August - 2010
CALC. BOOK 5743

CALAPOOYA CREEK, HWY 231
OR138W: DODGE CR/CALAPOOYA CR BRIDGE REPLACEMENTS
ELKTON-SUTHERLIN HWY 138, MP 22.10
DOUGLAS COUNTY

PLAN AND ELEVATION

SHEET 1 OF 20
DRAWING NO. 84334

F:\ODOT_DATA\PROJECTS\14813(calapooya creek)\EJL20861L.dgn :: Default 8/10/2010 8:26:31 AM hwye03b 1:240 - 1Plan

GENERAL NOTES:
Provide all materials and perform all work according to the Oregon Standard Specifications for Construction 2008.
Bridge is designed in accordance with the 2007 edition of the AASHTO LRFD Bridge Design Specifications (including 2007 thru 2008 interim revisions) and ODOT BDDM with an allowance of 25psf for future wearing surface and all of the following Live Loads :

Service and Strength I Limit States:
HL-93: Design truck (or trucks per LRFD 3.6.1.3) or the design tandems and the design lane load.
Strength II Limit State:
ODOT Type STP-5BW Permit truck
ODOT Type STP-4E Permit truck

Seismic design is performed by the single-mode analysis in accordance with the "AASHTO LRFD Bridge Design Specifications" as modified by the "ODOT Bridge Design & Drafting Manual". The 2002 USGS Seismic Hazard Maps have been used to collect the Seismic Hazard Values for the bridge site with Latitude 43°-20' and Longitude 123°-15':

1000 Year Return Period ("No Collapse" criteria)
Horizontal Peak Ground Acceleration Coefficient, PGA=0.24g
Horizontal Response Spectral Acceleration Coefficients: Ss=0.53g, S1=0.25g

500 Year Return Period ("Serviceable" criteria)
Horizontal Peak Ground Acceleration Coefficient, PGA=0.14g
Horizontal Response Spectral Acceleration Coefficients: Ss=0.31g, S1=0.15g
The bridge site is defined as a Site Class A with Site Factors of: Fpga=0.80, Fa =0.80, and Fv=0.80.
The Response Modification factors used are: R= 2.0 for column moments, R= 0.8 for abutment connections, and R= 1.0 for other components.

STRUCTURAL STEEL NOTES:
Provide 7/8" diameter Type 3 high-strength fasteners at structural connections according to AASHTO Specification M164 (ASTM Specification A325) unless shown otherwise.
Provide anchor bolts according to AASHTO M314, Grade 105 or ASTM A449.
Provide all other fasteners conforming to AASHTO M314, Grade 36 (ASTM A307) and/or AASHTO M314 Grade 105 (ASTM A449) as shown on the detail plans. Hot-dip galvanize after fabrication.
Shear connector studs shall be made from cold-drawn bars, Grade 1015, 1018, or 1020 fully killed, conforming to AASHTO M169 (ASTM A108) with a minimum yield and tensile strength of 60 ksi.
See the Special Provisions for detailed coating and tightening requirements.
Do not punch or drill holes in webs of interior girders for falsework.
Coat all girders as shown, in accordance with the Specifications.
The finish coat on all girders conform to Federal Color Standards most closely matching steel rusted shade.
Submit rusted shade color to engineer for approval.
All longitudinal dimensions are on a horizontal line - adjust for superelevation and grade.
All stiffeners and beam ends are to be vertical in final erected position unless noted otherwise.
Web thickness shown may be increased up to 1/16".
Additional compression flange weld splices will be permitted at locations approved by the engineer.
Steel in top and bottom flanges shall conform to ASTM A709 (AASHTO M270), Grade HPS 70W.
Steel in web shall conform to ASTM A709 (AASHTO M270), Grade HPS 70W.
All other steel shall conform to ASTM A709 (AASHTO M270), Grade 50W unless noted otherwise.
⊛ Indicates check sample required from flange plates so marked, see Special Provisions.
For the purpose of charpy toughness testing and welding inspection/repair, etc., main load carrying members are Girders and Stiffeners.
Assumed design temperature is 52° F.

WELDING NOTES:
All general welding shall conform to the latest edition of AWS D1.1.
All reinforcing welding shall conform to the latest edition of AWS D1.4.
All bridge welding shall conform to the latest edition of AWS D1.5.

BOLTING NOTES:
All high strength bolts shall be tightened using the "Turn-of-Nut Tightening" method according to the 2008 Oregon Standard Specifications for Construction.
All high strength bolted connections are slip-critical connections.

FOUNDATION NOTES:
See Footing Plan for foundation design notes.

REINFORCING NOTES:
Provide spiral column reinforcement and column vertical bars according to ASTM A706, AASHTO M31 (ASTM A615) Grade 60, AASHTO M225 (ASTM A496), or AASHTO M32 (ASTM A82).

Provide all other reinforcing steel according to ASTM Specification A706, or AASHTO M31 (ASTM A615) Grade 60. Use the following splice lengths unless shown otherwise:

REINFORCING SPLICE LENGTHS (CLASS B) GRADE 60 f'c = 3.3 ksi

Bar Size	#3	#4	#5	#6	#7	#8	#9	#10	#11	#14 & #18
Uncoated	1'-0"	1'-4"	1'-8"	2'-0"	2'-9"	3'-7"	4'-6"	5'-9"	7'-0"	Not Permitted
Coated (1)	1'-2"	1'-7"	2'-0"	2'-5"	3'-3"	4'-3"	5'-5"	6'-10"	8'-5"	Not Permitted
Coated (2)	1'-6"	2'-0"	2'-6"	3'-0"	4'-1"	5'-4"	6'-9"	8'-7"	10'-6"	Not Permitted

REINFORCING SPLICE LENGTHS (CLASS B) GRADE 60 f'c = 4.0 ksi

Bar Size	#3	#4	#5	#6	#7	#8	#9	#10	#11	#14 & #18
Uncoated	1'-0"	1'-4"	1'-8"	2'-0"	2'-6"	3'-3"	4'-1"	5'-2"	6'-4"	Not Permitted
Coated (1)	1'-2"	1'-7"	2'-0"	2'-5"	3'-0"	3'-11"	4'-11"	6'-3"	7'-8"	Not Permitted
Coated (2)	1'-6"	2'-0"	2'-6"	3'-0"	3'-8"	4'-10"	6'-2"	7'-9"	9'-6"	Not Permitted

Use coated (1) for epoxy coated bars with cover at least $3*d_b$ and clear spacing between bars at least $6*d_b$.

Use coated (2) for epoxy coated bars with cover less than $3*d_b$ or clear spacing between bars less than $6*d_b$.

Increase all splice lengths 40% for horizontal or nearly horizontal bars so placed that more than 12" of fresh concrete is cast below the bar.

d_b = bar diameter
Splice reinforcing steel at alternate bars, staggered at least one splice length or as far as possible, unless shown otherwise.
Support the bottom mat reinforcing steel from the forms with precast mortar blocks at 24" maximum centers each way. Support the top mat of reinforcing steel from the bottom mat of reinforcing steel with wire bar supports as shown in Chapter 3 of the CRSI Manual of Standard Practice (SBU, BBU, or CHCU). Place wire bar supports at 24" maximum centers.
Use uncoated reinforcing steel in the deck and bridge end panel. This includes top and bottom longitudinal bars, (and) top and bottom transverse bars, and all bars extending into the parapet.
Place bars 2" clear of the nearest face of concrete unless shown otherwise.
Do not fabricate reinforcing steel for columns until final foundation elevations have been determined in the field.
Contractor shall have the option to replace lap splices with approved mechanical splices.

CONCRETE NOTES:
Provide Class HPC4000 - 3/4 concrete in deck.
Provide Class 3300 (Seal Concrete) - 1 1/2, 1, 3/4 concrete in seals.
Provide Class 4000 - 3/8 concrete for all drilled shafts.
Provide Class HPC4000 - 1 1/2, 1, 3/4 concrete in reinforced concrete end panels.
Provide Class 3300 - 1 1/2, 1, 3/4 concrete for all other concrete.
Chamfer all concrete corners 3/4" unless shown otherwise.

GENERAL CONSTRUCTION SEQUENCE:

NOTE: All ground effecting work within the OHW limits shall be performed from July 1st to Sept. 15th

1. Construct Temporary Detour Bridge.
2. Shift Traffic to detour.
3. Construct temporary work bridge.
4. Remove existing structure.
5. Excavate for Bent 2.
6. Construct Bent 2 drilled shaft.
7. Construct Bent 2 column.
8. Excavate for riprap revetment, shore as required.
9. Excavate for Bents 1 and 3 pile caps.
10. Drive piles for Bents 1 and 3.
11. Place Class 700 riprap revetment.
12. Construct Bents 1 and 3 pile caps.
13. Construct Bent 2 cross beam.
14. Place steel girders and install cross frames.
15. Construct deck formwork.
16. Pour deck. Deck screeding shall be done normal to the roadway centerline.
17. Construct Bents 1 and 3 backwalls.
18. Pour wingwalls and shear lugs.
19. Pour closure pours.
20. End bents may be backfilled after concrete has reached the required strength and a minimum of 7 days after placement.
21. Pour end panels.
22. Pour concrete rails after deck & end panel concrete has reached design strength and a minimum of 7 days after placement. Wet cure shall be maintained for 14 days.
23. Remove detour bridge and temporary work platform.
24. Finalize placement of riprap.

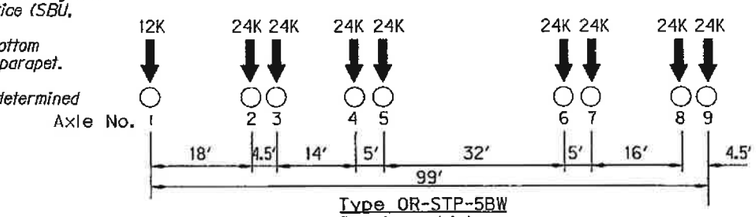

Type OR-STP-5BW
9 axle vehicle
Gross weight = 204K

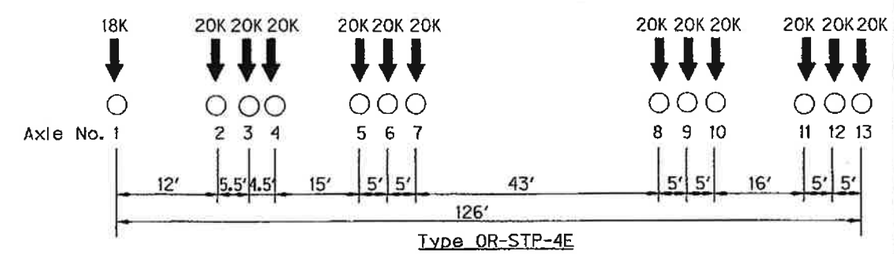

Type OR-STP-4E
13 axle vehicle
Gross weight = 258K

SCALE WARNING
If scale bar doesn't measure one inch then drawing is not to scale

△	DATE	REVISION	BY

ACCOMPANIED BY DWGS. See sheet 1 for this structure

DRAFTER: E. Leon
DESIGNER: Robert Kaspari
CHECKER: Steve Garlick
REVIEWER: R. Grubbs

STRUCTURAL REGISTERED PROFESSIONAL ENGINEER 12560 OREGON JULY 13, 1984 ROBERT V. KASPARI
RENEWS: 6/30/2011

OREGON DEPARTMENT OF TRANSPORTATION
BRIDGE ENGINEERING HEADQUARTERS
355 Capitol St NE, Rm 301
Salem, OR 97301-3871
(503) 986-4200

STRUCTURE NO. 20861
DATE August - 2010
CALC. BOOK 5743

CALAPOOYA CREEK, HWY 231
OR138W: DODGE CR/CALAPOOYA CR BRIDGE REPLACEMENTS
ELKTON-SUTHERLIN HWY 138, MP 22.10
DOUGLAS COUNTY

GENERAL NOTES & CONSTRUCTION SEQUENCE

SHEET 2 OF 20
DRAWING NO. 84335

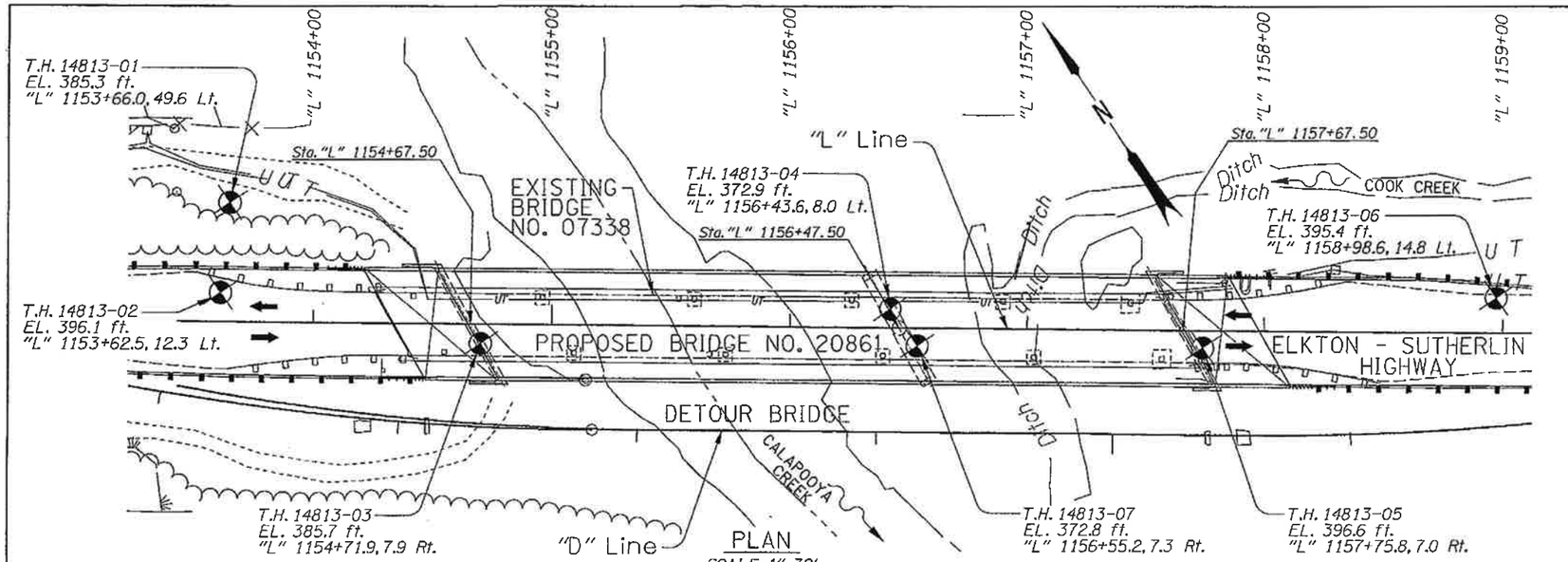

PLAN
SCALE: 1"=30'

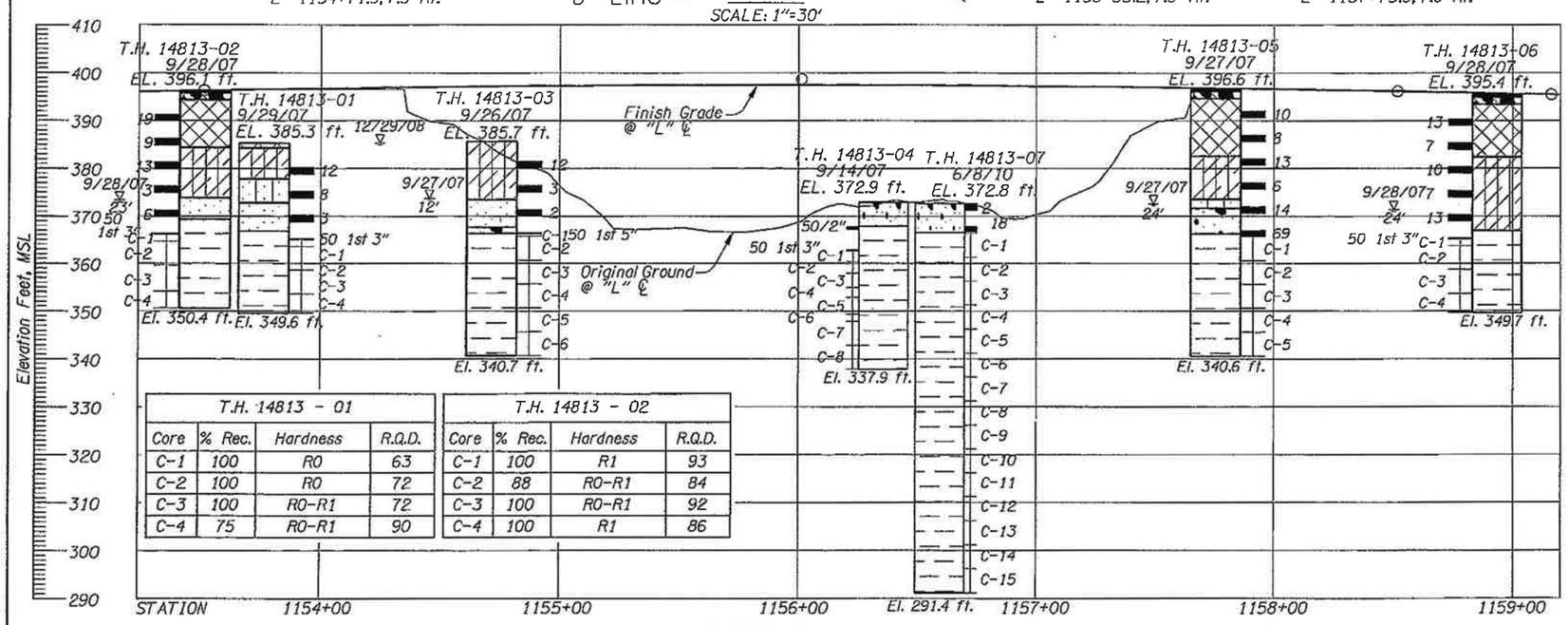

T.H. 14813 - 01			
Core	% Rec.	Hardness	R.Q.D.
C-1	100	R0	63
C-2	100	R0	72
C-3	100	R0-R1	72
C-4	75	R0-R1	90

T.H. 14813 - 02			
Core	% Rec.	Hardness	R.Q.D.
C-1	100	R1	93
C-2	88	R0-R1	84
C-3	100	R0-R1	92
C-4	100	R1	86

PROFILE
SCALE : Vertical 1"=15'
Horizontal 1"=30'

In accordance with ASTM D1586-84, N Values are reported for an interval of 12" except as noted.

15 = Standard penetration test - N value

C-1 = Rock Core

= Drill hole location

= Depth of groundwater measured in test hole on the date shown

Note: Dimensions are in feet (ft.) except as noted.

Legend

AC

Base Rock

Calapooya Unit-1
Sandy GRAVEL with trace to some silt, cobbles and boulders, GW; to Gravelly SAND with some cobbles and boulders trace silt and clay, SP; to Gravelly Clayey SILT with trace to some clay cobbles and boulders, ML; to Gravelly Sandy SILT with some clay cobbles and boulders, ML; to Sandy SILT with trace gravel, ML; to Gravely SAND with some silt, SP; to Sandy SILT, ML; brown, gray-brown gray, dark gray, nonplastic to medium plasticity, dry to moist, loose to medium dense and medium stiff to stiff, fine to medium sand, fine to coarse gravel. (Fill)

Calapooya Unit-2
CLAY, CH, to CLAY with some sand, CH, to Clayey SILT with trace to some sand, MH, to SILT with some clay and sand, ML, to Sandy CLAY with some silt, CL, to Silty SAND with some clay and gravel, SM; orange-brown, brown, dark brown, dark gray and gray-brown, some mottling, low to high plasticity, damp to wet, soft to stiff. (Alluvium)

Calapooya Unit-3
Sandy SILT with some clay, ML, to Silty SAND with trace gravel, SM; brown to orange-brown, nonplastic to low plasticity, moist to wet, medium stiff to stiff and loose to medium dense, fine to medium grained. (Alluvium)

Calapooya Unit-4
Silty SAND, SM, to SAND with some silt, SP-SM, to silty SAND with trace clay, SM; brown, orange-brown, gray brown, some mottling, nonplastic to low plasticity, wet, very loose to loose, fine to medium grained, has scattered zones of thin interbedded clayey silt lenses. (Alluvium)

Calapooya Unit-5
Gravelly Silty SAND, SW; to SAND with some gravel trace silt, SP; to Sandy GRAVEL with some silt, trace clay, GP; to GRAVEL with some sand, GP; brown to gray-brown, dark gray, nonplastic to low plasticity, moist to wet, very loose to medium dense, fine rounded gravel, fine to coarse sand. (Alluvium)

Calapooya Unit-6
MUDSTONE, gray, decomposed to mainly to fresh, extremely soft to mainly very soft, very close to wide jointing, some sheared zones with slickensides along joints, laminated to thick bedded, fissile along some bedding planes, some zones hand friable. (Tenmile Formation)

T.H. 14813 - 04			
Core	% Rec.	Hardness	R.Q.D.
C-1	100	R0	91
C-2	100	R0	0
C-3	100	R1	52
C-4	100	R1	0
C-5	100	R0-R1	68
C-6	100	R0-R1	47
C-7	100	R0-R1	52
C-8	100	R1	40

T.H. 14813 - 05			
Core	% Rec.	Hardness	R.Q.D.
C-1	100	R0-R1	64
C-2	100	R0	0
C-3	100	R0	0
C-4	100	R0	0
C-5	100	R0-R1	8

T.H. 14813 - 06			
Core	% Rec.	Hardness	R.Q.D.
C-1	100	R0	67
C-2	100	R0	68
C-3	100	R0-R1	32
C-4	100	R0-R1	50

T.H. 14813 - 03			
Core	% Rec.	Hardness	R.Q.D.
C-1	85	R0	0
C-2	100	R0	0
C-3	100	R0-R1	68
C-4	100	R0-R1	80
C-5	100	R1	88
C-6	100	R0	80

T.H. 14813 - 07			
Core	% Rec.	Hardness	R.Q.D.
C-1	94	R1	50
C-2	100	R1	40
C-3	100	R1	100
C-4	100	R1	92
C-5	100	R0-R1	0
C-6	92	R1	48
C-7	100	R1	80
C-8	100	R1	50
C-9	98	R1	26
C-10	96	R1	70
C-11	100	R1	68
C-12	96	R0-R1	50
C-13	100	R1	40
C-14	100	R1	90
C-15	100	R1	50

DATE	REVISION	BY

ACCOMPANIED BY DWGS.
See sheet 1

DRAFTER: Josh Lonie
REVIEWER: Wade Horaday, P.E.

GEOTECHNICAL ENGINEER: REGISTERED PROFESSIONAL ENGINEER 17603 OREGON JULY 25, 1995 PETE CASTRO — RENEWAL Dec. 31, 2011

ENGINEERING GEOLOGIST: CERTIFIED OREGON Daniel R. Rokey E1451 ENGINEERING GEOLOGIST — RENEWAL June 30, 2011

OREGON DEPARTMENT OF TRANSPORTATION
REGION 3 TECH CENTER

STRUCTURE NO. 20861
DATE August 2010
CALC. BOOK

CALAPOOYA CREEK, HWY 231
OR138W: DODGE CR/CALAPOOYA CR BRIDGE REPLACEMENTS
ELKTON-SUTHERLIN HIGHWAY (OR138) MP 22.10
DOUGLAS COUNTY

FOUNDATION DATA

SHEET 3 OF 20
DRAWING NO. 84336

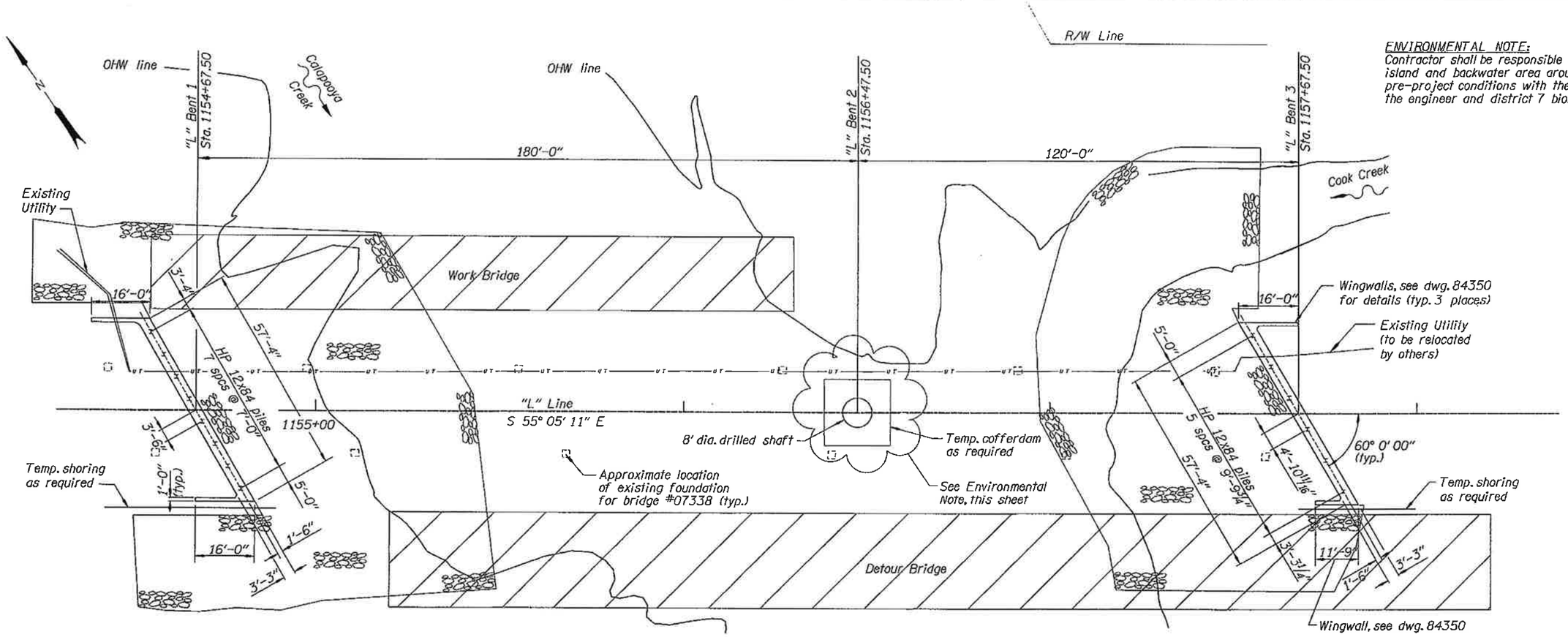

FOOTING PLAN

Scale: 1" = 15'-0"

ENVIRONMENTAL NOTE:
Contractor shall be responsible for restoring island and backwater area around Bent 2 to pre-project conditions with the guidance of the engineer and district 7 biologist.

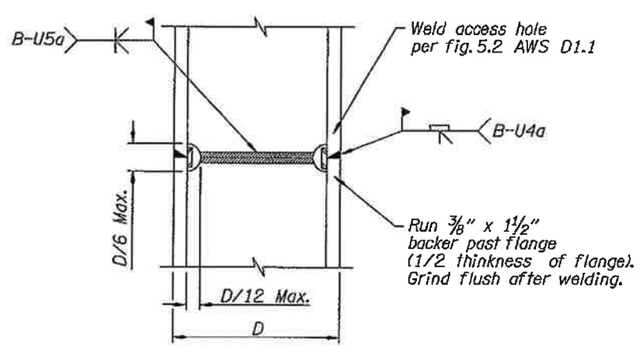

H-PILE SPLICE DETAIL

No Scale

NOTES:
Bents 1 and 3 are parallel and similar, except as shown.
Provide all shoring as required for construction. The contractor shall determine the actual location, design and limits of all shoring. The locations and limits shown are only provided to alert the contractor that shoring is anticipated.
Place piles as shown with flanges parallel to the "L" Line.
Bents 1 and 3, Provide HP12x84, ASTM A572 Grade 50 piling with reinforced tips driven to a nominal resistance of 890 kips per pile.
Pile tip elevation for minimum pile penetration at Bents 1 and 3 is 366'.
Drive all piling to the specified nominal resistance using driving criteria developed from the FHWA Gates Equation.

SCALE WARNING
If scale bar doesn't measure one inch then drawing is not to scale

△	DATE	REVISION	BY

ACCOMPANIED BY DWGS. See sheet 1 for this structure

DRAFTER: E. Leon
DESIGNER: Robert Kaspari
CHECKER: Steve Garlick
REVIEWER: R. Grubbs

STRUCTURAL REGISTERED PROFESSIONAL ENGINEER 12560 OREGON JULY 13, 1982 ROBERT V. KASPARI
RENEWS: 6/30/2010

OREGON DEPARTMENT OF TRANSPORTATION
BRIDGE ENGINEERING HEADQUARTERS
355 Capitol St NE, Rm 301
Salem, OR 97301-3871
(503) 986-4200

STRUCTURE NO. 20861
DATE August - 2010
CALC. BOOK 5743

CALAPOOYA CREEK, HWY 231
OR138W: DODGE CR/CALAPOOYA CR BRIDGE REPLACEMENTS
ELKTON-SUTHERLIN HWY 138, MP 22.10
DOUGLAS COUNTY

FOOTING PLAN

SHEET 4 OF 20
DRAWING NO. 84337

F:\ODOT_DATA\PROJECTS\14813(calapooya creek)\EJL20861L.dgn :: Default 8/10/2010 8:34:24 AM hwye03b 1:180 - 4Footing

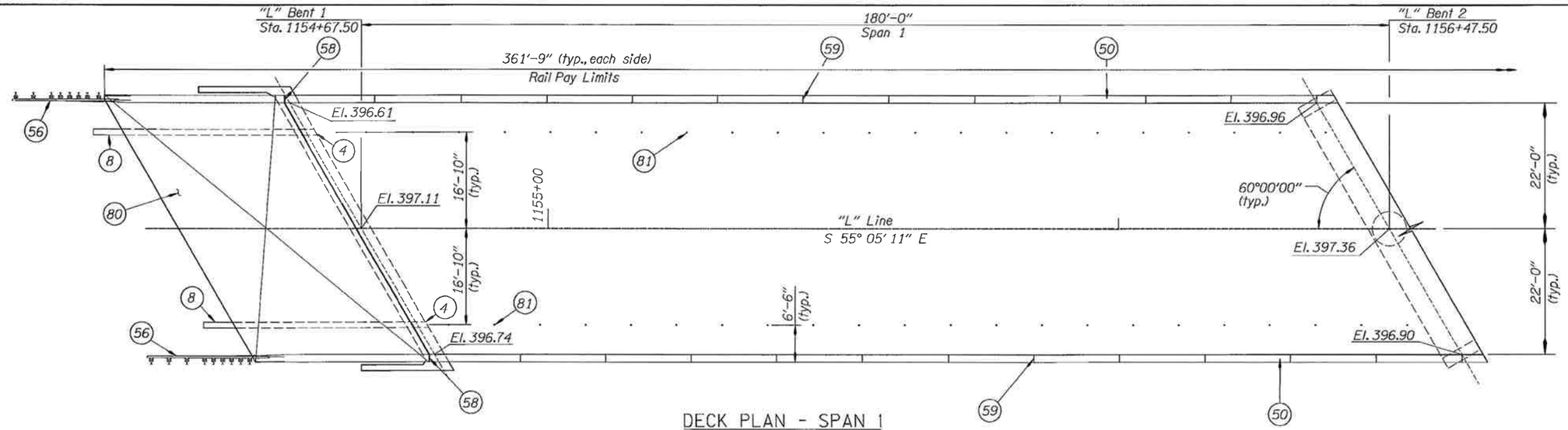

DECK PLAN - SPAN 1

Scale: 1" = 10'-0"

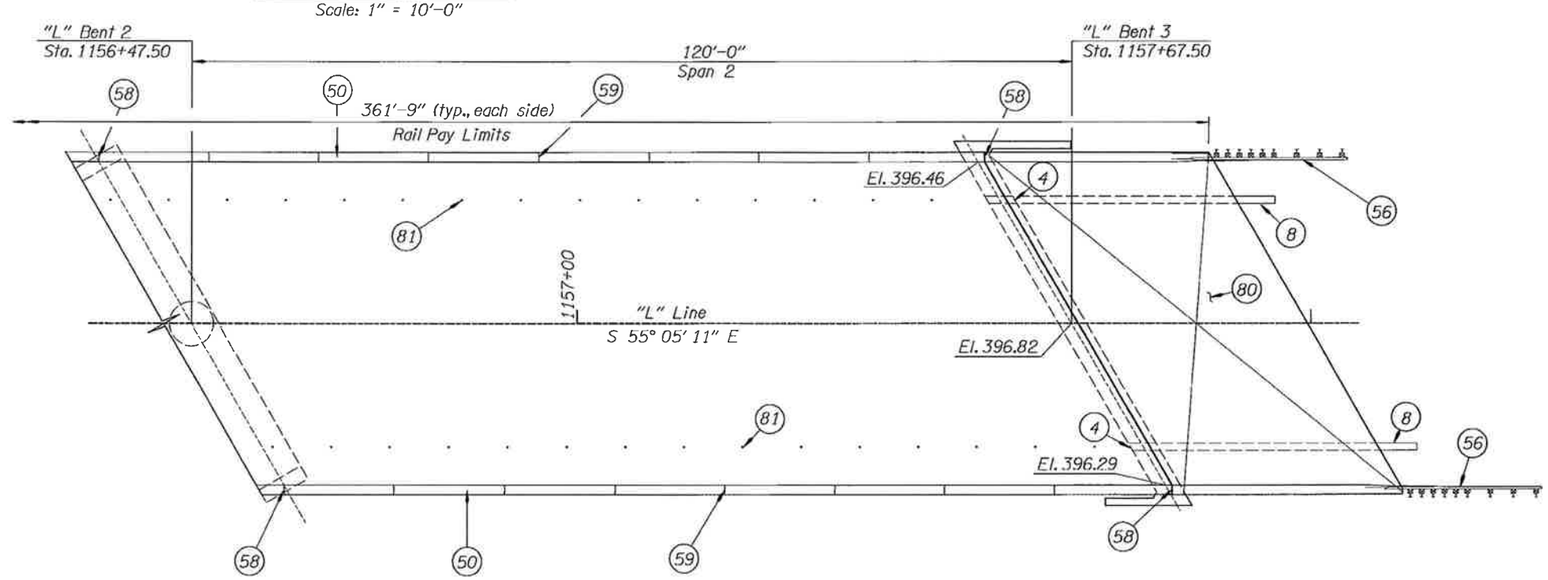

DECK PLAN - SPAN 2

Scale: 1" = 10'-0"

Note:
Deck elevations shown are finish grade at the bent centerlines where they intersect with the "L" line and face of rail.

DETAIL REFERENCE NUMBERS:

(4) –Provide 1'-2" diameter holes through end bents. See dwgs. 84348 for details. Use styrofoam for blockouts. Place #5 – 1'-4" dia. spiral x 1'-0" at each void location, with 2" pitch. Weld each end per AWS D1.4.

(8) –Place concrete culvert pipe, galvanized smooth steel pipe (1/4" min. wall thickness), or Sch. 40 PVC pipe of 12" inside Φ under RC end panel at each utility hole at both ends of bridge. Extend through hole in end bent to a point 5' minimum beyond the end of the approach panel. Contractor shall ensure hole provided in Detail 4 is of adequate size for pipe (min 1" larger Φ than pipe). When the pipe is installed, the void around the pipe should be filled with a compressible material. Pipe will be placed to follow road grade.

(50) –Standard concrete bridge rail, Type "F", see dwg. BR200 for details.

(56) –Standard guardrail transition, see dwg. BR203 for details.

(58) –Place Type "B" joints through rail at Bents 1, 2, and 3, see dwg. BR200 for details.

(59) –Place 1/4" x 1 1/2" scoring joint at equal spaces, (15'-0" max.) between Type "B" joints, see dwg. BR200 for details.

(80) –Standard 30'-4" bridge end panel at bridge ends, see dwg. BR165 for details.

(81) –Provide hot-dip galvanized expanded coil concrete inserts with closed-back ferrule, threaded for 3/4" Φ bolts installed in the deck at 10' max. centers above each line of utility holes (min. insert length 5 1/2", min. safe working load in tension 6000 lbs.). Install short galvanized bolts in the inserts to prevent rusting of the threads, if the inserts are not to be used immediately.

SCALE WARNING
If scale bar doesn't measure one inch then drawing is not to scale

DATE	REVISION	BY

ACCOMPANIED BY DWGS. See sheet 1 for this structure

DRAFTER: E. Leon
DESIGNER: Robert Kaspari
CHECKER: Steve Garlick
REVIEWER: R. Grubbs

STRUCTURAL REGISTERED PROFESSIONAL ENGINEER 12560 OREGON JULY 13, 1984 ROBERT V. KASPARI
RENEWS: 6/30/2010

OREGON DEPARTMENT OF TRANSPORTATION
BRIDGE ENGINEERING HEADQUARTERS
355 Capitol St NE, Rm 301
Salem, OR 97301-3871
(503) 986-4200

STRUCTURE NO. 20861
DATE August - 2010
CALC. BOOK 5743

CALAPOOYA CREEK, HWY 231
OR138W: DODGE CR/CALAPOOYA CR BRIDGE REPLACEMENTS
ELKTON-SUTHERLIN HWY 138, MP 22.10
DOUGLAS COUNTY

DECK PLAN

SHEET 5 OF 20
DRAWING NO. 84338

F:\ODOT_DATA\PROJECTS\14813(calapooya creek)\EJL20861L.dgn :: Default 8/10/2010 11:48:18 AM hwye03b 1:120- 5Deckplan

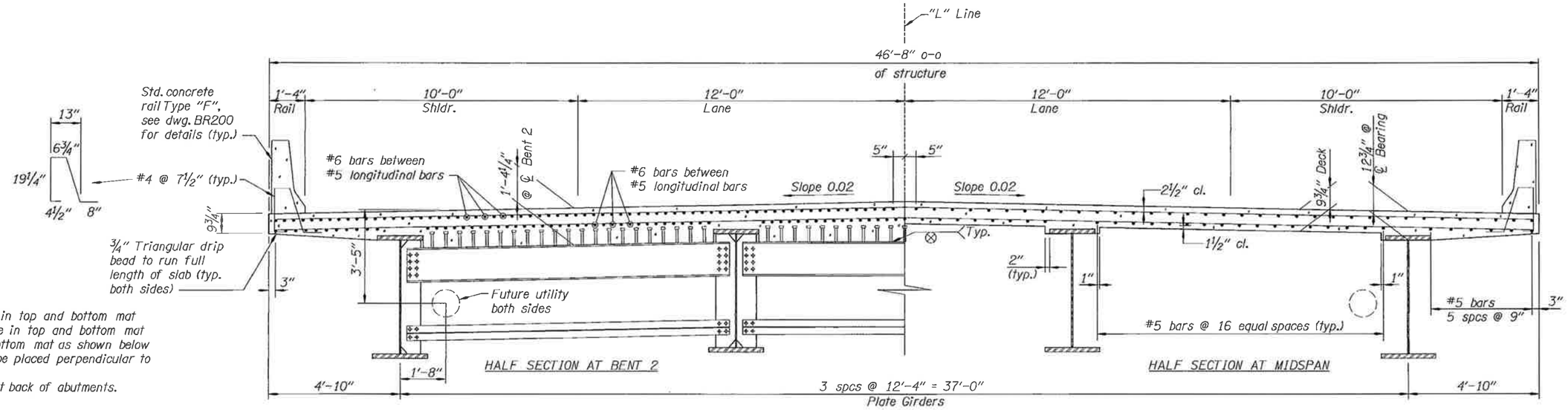

DECK REINFORCING:
#5 @ 8" Longitudinal in top and bottom mat
#5 @ 5½" Transverse in top and bottom mat
Longitudinal bars in bottom mat as shown below
Transverse bars shall be placed perpendicular to roadway centerline.
Cut bars as required at back of abutments.

DECK REINFORCING (over bent 2):
#6 bars between #5 bars Longitudinal in top mat
#6 bars between #5 bars Longitudinal in bottom mat

TYPICAL DECK SECTION

Scale: ½" = 1'-0"

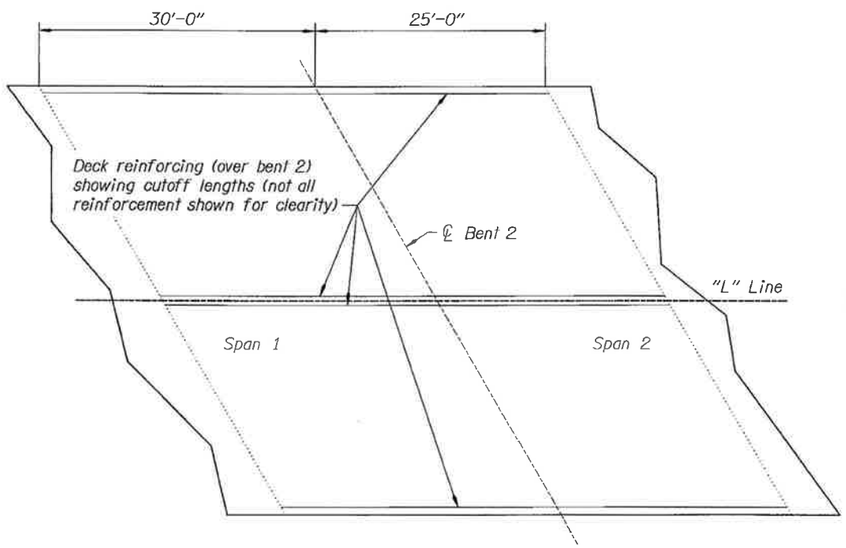

DECK REINFORCING (over Bent 2)

No Scale

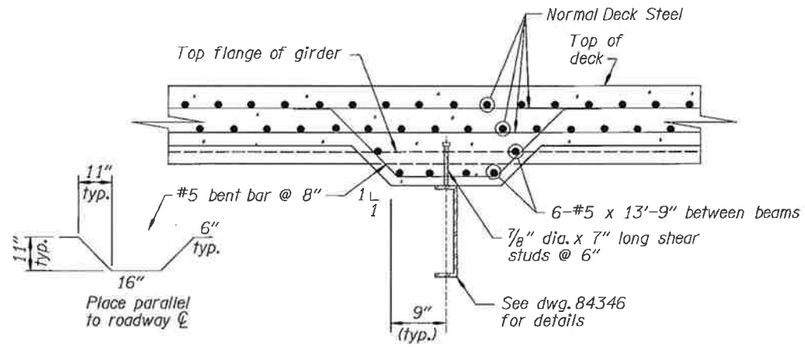

Note: Only thicken deck between beams, not at overhang locations.

TYPICAL THICKENED DECK AT BENT 2

Scale: 1" = 1'-0"

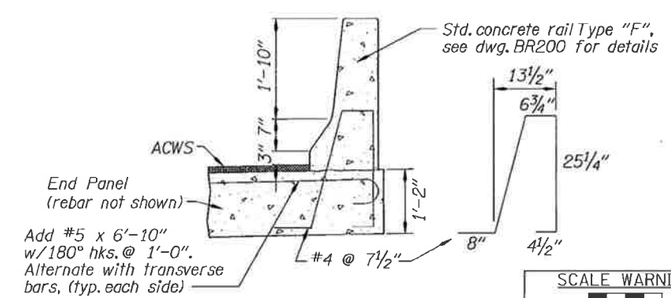

RAIL DETAILS ON END PANEL

Scale: ¾" = 1'-0"

SCALE WARNING

If scale bar doesn't measure one inch then drawing is not to scale

DATE	REVISION	BY

ACCOMPANIED BY DWGS. See sheet 1 for this structure

DRAFTER: E. Leon
DESIGNER: Robert Kaspari
CHECKER: Steve Garlick
REVIEWER: R. Grubbs

STRUCTURAL REGISTERED PROFESSIONAL ENGINEER 12560 OREGON JULY 15, 1994 ROBERT V. KASPARI
RENEWS: 6/30/2010

OREGON DEPARTMENT OF TRANSPORTATION
BRIDGE ENGINEERING HEADQUARTERS
355 Capitol St NE, Rm 301
Salem, OR 97301-3871
(503) 986-4200

STRUCTURE NO. 20861
DATE August - 2010
CALC. BOOK 5743

CALAPOOYA CREEK, HWY 231
OR138W: DODGE CR/CALAPOOYA CR BRIDGE REPLACEMENTS
ELKTON-SUTHERLIN HWY 138, MP 22.10
DOUGLAS COUNTY

TYPICAL DECK SECTION

SHEET 6 OF 20
DRAWING NO. 84339

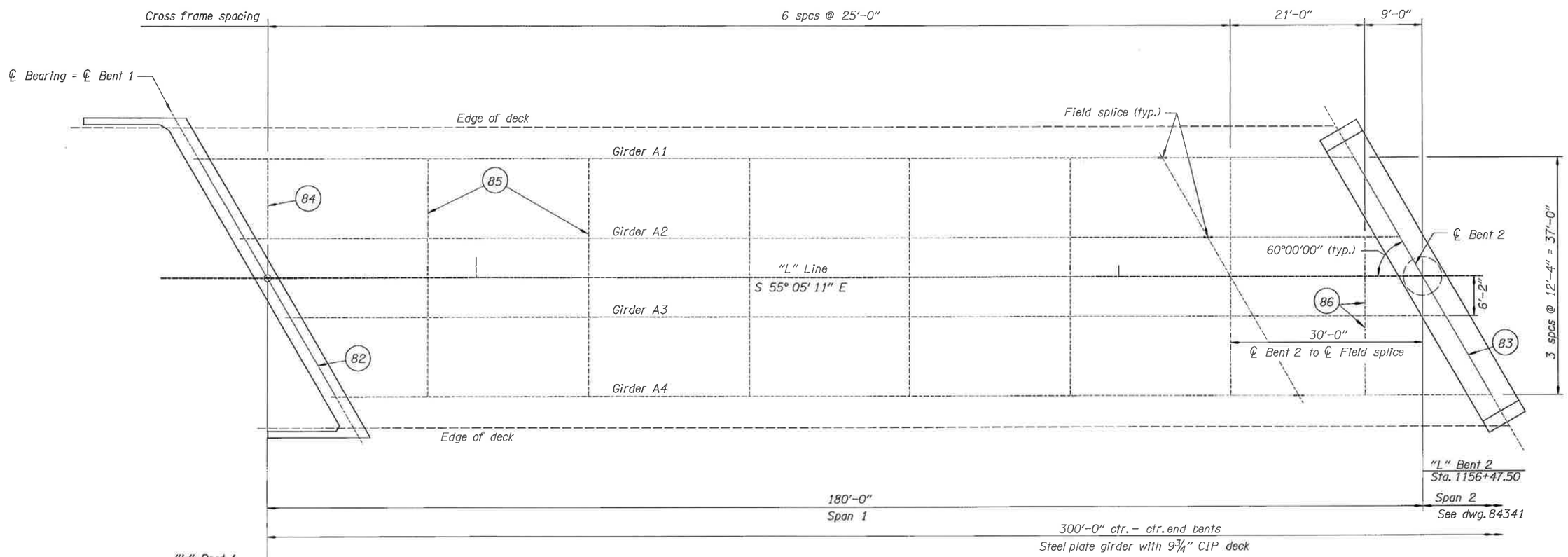

FRAMING PLAN: Span 1

Scale: 1/8" = 1'-0"

DETAIL REFERENCE NUMBERS:

(82) – End Cross Frame, see dwg. 84346 for details

(83) – Bent 2 Cross Frame, see dwg. 84346 for details

(84) – Partial Cross Frame A, see dwg. 84346 for details

(85) – Intermediate Cross Frame, see dwg. 84347 for details

(86) – Partial Cross Frame B, see dwg. 84347 for details

SCALE WARNING

If scale bar doesn't measure one inch then drawing is not to scale

DATE	REVISION	BY

ACCOMPANIED BY DWGS. See sheet 1 for this structure

DRAFTER: E. Leon
DESIGNER: Robert Kaspari
CHECKER: Steve Garlick
REVIEWER: R. Grubbs

STRUCTURAL REGISTERED PROFESSIONAL ENGINEER 12560 OREGON JULY 13, 1984 ROBERT V. KASPARI
RENEWS: 6/30/2010

OREGON DEPARTMENT OF TRANSPORTATION
BRIDGE ENGINEERING HEADQUARTERS
355 Capitol St NE, Rm 301
Salem, OR 97301-3871
(503) 986-4200

STRUCTURE NO. 20861
DATE August - 2010
CALC. BOOK 5743

CALAPOOYA CREEK, HWY 231
OR138W: DODGE CR/CALAPOOYA CR BRIDGE REPLACEMENTS
ELKTON-SUTHERLIN HWY 138, MP 22.10
DOUGLAS COUNTY

FRAMING PLAN - SPAN 1

SHEET 7 OF 20
DRAWING NO. 84340

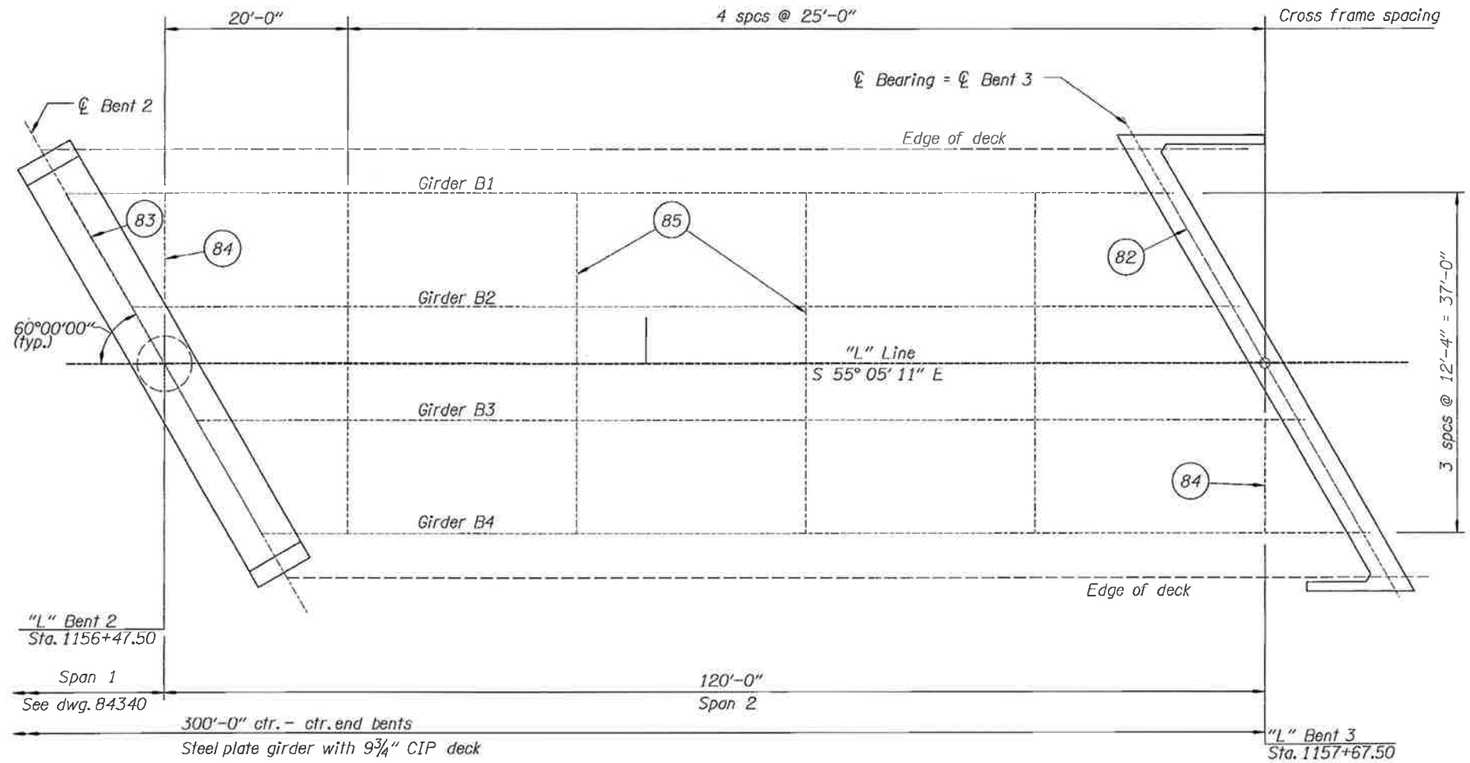

FRAMING PLAN: Span 2

Scale: 1/8" = 1'-0"

Note:
See dwg. 84340 for detail reference numbers

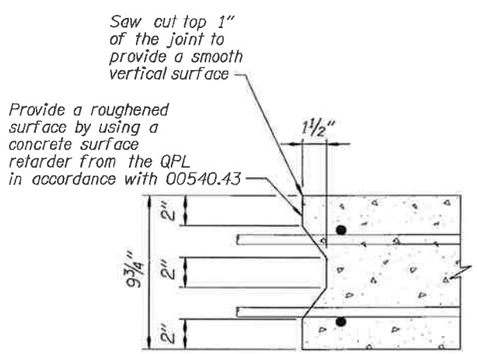

DECK CONSTRUCTION JOINT

No Scale

SCALE WARNING

If scale bar doesn't measure one inch then drawing is not to scale

DATE	REVISION	BY

ACCOMPANIED BY DWGS. See sheet 1 for this structure

DRAFTER: F. Leon
DESIGNER: Robert Kaspari
CHECKER: Steve Garlick
REVIEWER: R. Grubbs

STRUCTURAL REGISTERED PROFESSIONAL ENGINEER 12560 OREGON JULY 13, 1984 ROBERT V. KASPARI
RENEWS: 6/30/2010

OREGON DEPARTMENT OF TRANSPORTATION
BRIDGE ENGINEERING HEADQUARTERS
355 Capitol St NE, Rm 301
Salem, OR 97301-3871
(503) 986-4200

STRUCTURE NO. 20861
DATE August - 2010
CALC. BOOK 5743

CALAPOOYA CREEK, HWY 231
OR138W: DODGE CR/CALAPOOYA CR BRIDGE REPLACEMENTS
ELKTON-SUTHERLIN HWY 138, MP 22.10
DOUGLAS COUNT

FRAMING PLAN - SPAN 2

SHEET 8 OF 20
DRAWING NO. 84341

F:\ODOT_DATA\PROJECTS\14813(calapooya creek)\EJL20861L.dgn :: Default 8/10/2010 8:51:56 AM hwye03b 1:96 - 8Frame 2

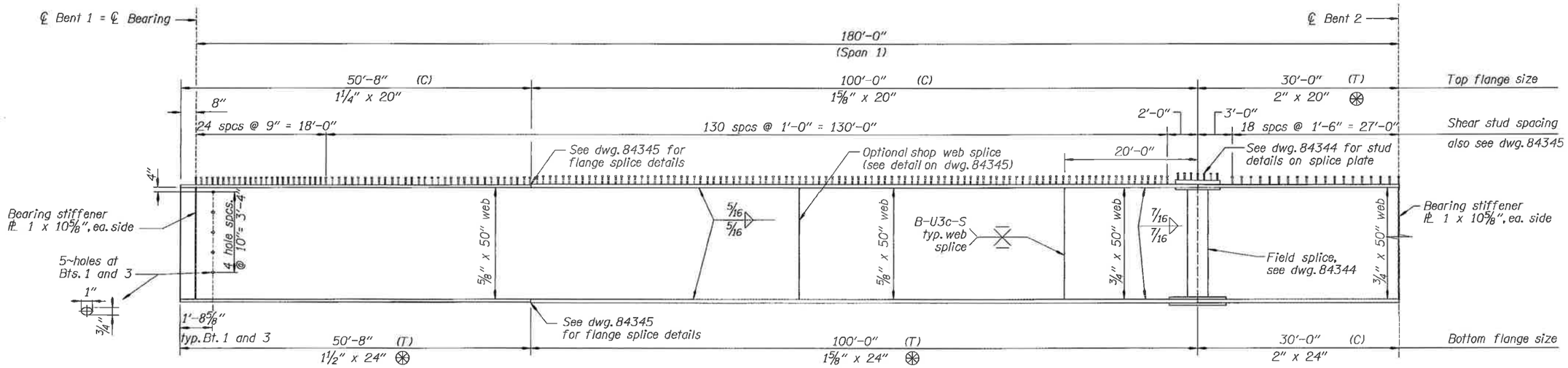

ELEVATION: Span 1 Girder

No Scale

(T) Denotes Tension

(C) Denotes Compression

⊛ Indicates check sample required from flange plates so marked, see Standard Specifications Section 00560.22(c).

Notes:
See Framing Plan dwgs. 84340 and 84341 for cross frame spacing.

See dwg. 84343 for Span 2 Steel Girder details.

BEAM CAMBER											
SPAN NO.	ITEM	CAMBER (in)									H (in)
		0.1	0.2	0.3	0.4	0.5	0.6	0.7	0.8	0.9	
1	Grade Line	11/16	1 1/4	1 5/8	1 7/8	1 15/16	1 7/8	1 5/8	1 1/4	11/16	3
	Beam Dead Load	15/16	1 11/16	2 1/4	2 1/2	2 1/2	2 3/16	1 11/16	1 1/16	1/2	
	Deck Dead Load	4 7/16	8 1/4	10 13/16	12 1/16	11 15/16	10 1/2	8 1/8	5 1/8	2 1/4	
	Rail Dead Load	1/4	7/16	9/16	5/8	5/8	9/16	7/16	5/16	1/8	
	Shrinkage	7/16	11/16	13/16	13/16	11/16	9/16	3/8	3/16	1/16	
	Total	6 3/4	12 5/16	16 1/8	17 15/16	17 3/4	15 3/4	12 5/16	8	3 5/8	

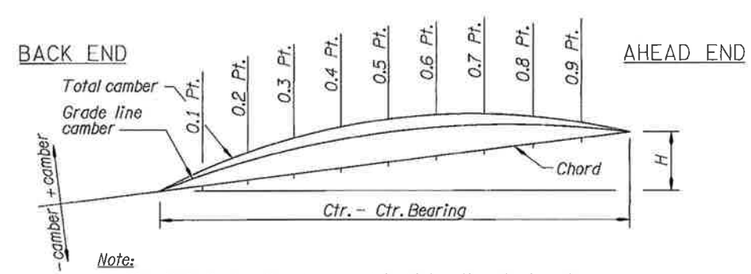

Note:
Positive H indicates the ahead end is higher than back end.
50% of shrinkage camber occurs prior to the concrete bridge rail pour.

CAMBER DIAGRAM

No Scale

SCALE WARNING
If scale bar doesn't measure one inch then drawing is not to scale

DATE	REVISION	BY

ACCOMPANIED BY DWGS. See sheet 1 for this structure

DRAFTER: E. Leon
DESIGNER: Robert Kaspari
CHECKER: Steve Garlick
REVIEWER: R. Grubbs

STRUCTURAL REGISTERED PROFESSIONAL ENGINEER 12560 OREGON JULY 13, 1984 ROBERT V. KASPARI
RENEWS: 6/30/2011

OREGON DEPARTMENT OF TRANSPORTATION
BRIDGE ENGINEERING HEADQUARTERS
355 Capitol St NE, Rm 301
Salem, OR 97301-3871
(503) 986-4200

STRUCTURE NO. 20861
DATE August - 2010
CALC. BOOK 5743

CALAPOOYA CREEK, HWY 231
OR138W: DODGE CR/CALAPOOYA CR BRIDGE REPLACEMENTS
ELKTON-SUTHERLIN HWY 138, MP 22.10
DOUGLAS COUNTY

STEEL GIRDER - SPAN 1

SHEET 9 OF 20
DRAWING NO. 84342

F:\ODOT_DATA\PROJECTS\14813(calapooya creek)\EJL20861L.dgn :: Default 9/8/2010 3:56:18 PM hwye03b 1:48 - 9Girder 1

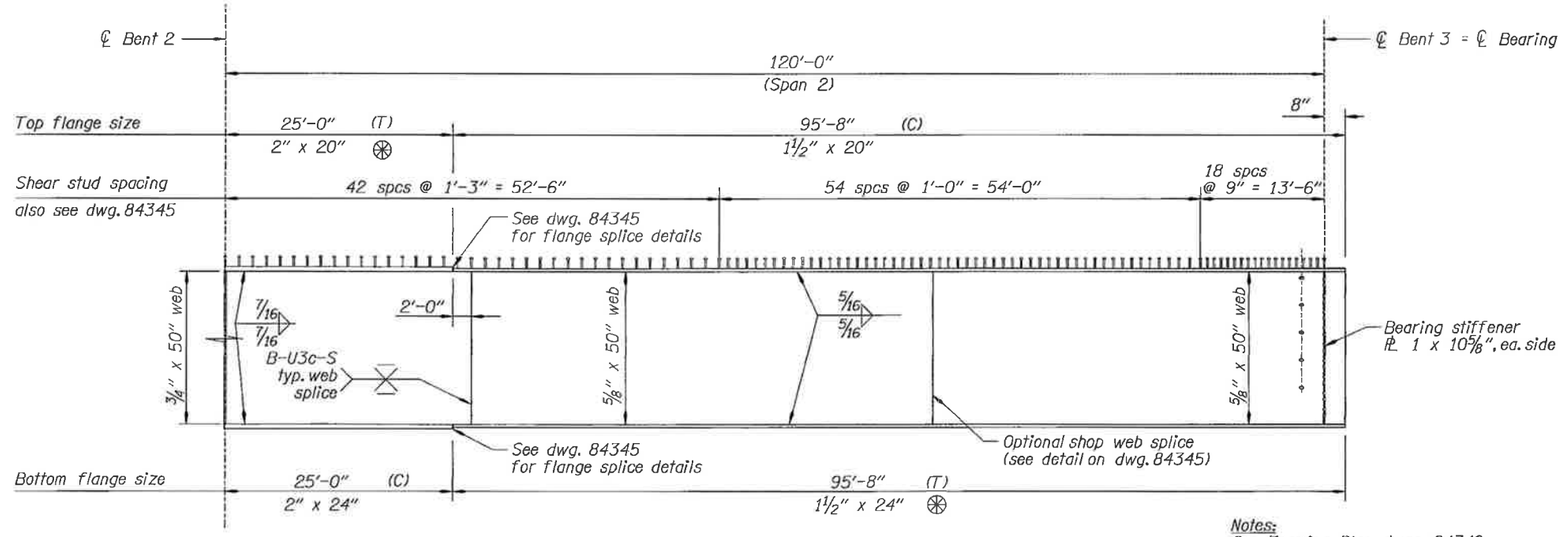

ELEVATION: Span 2 Girder

No Scale

Notes:
See Framing Plan dwgs. 84340 and 84341 for cross frame spacing.

See dwg. 84342 for Span 1 Steel Girder details.

(T) Denotes Tension

(C) Denotes Compression

⊛ Indicates check sample required from flange plates so marked, see Standard Specifications Section 00560.22(c).

BEAM CAMBER

SPAN NO.	ITEM	CAMBER (in) 0.1	0.2	0.3	0.4	0.5	0.6	0.7	0.8	0.9	H (in)
2	Grade Line	5/16	9/16	3/4	13/16	7/8	13/16	11/16	1/2	5/16	-6½
	Beam Dead Load	-3/16	-1/4	-3/16	-3/16	-1/16	0	0	1/16	1/16	
	Deck Dead Load	-13/16	-1 1/16	-1	-3/4	-1/2	-1/8	0	3/16	1/8	
	Rail Dead Load	0	-1/16	0	0	0	0	0	0	0	
	Shrinkage	0	1/16	3/16	1/4	5/16	3/8	3/8	5/16	3/16	
	Total	-11/16	-11/16	-3/8	1/8	5/8	1 1/16	1 1/8	1 1/16	11/16	

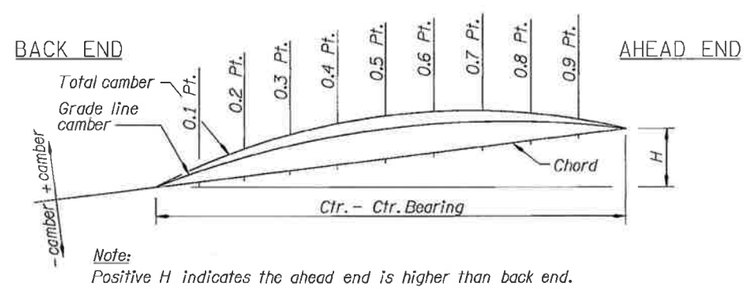

Note:
Positive H indicates the ahead end is higher than back end.
50% of shrinkage camber occurs prior to the concrete bridge rail pour.

CAMBER DIAGRAM

No Scale

SCALE WARNING
If scale bar doesn't measure one inch then drawing is not to scale

DATE	REVISION	BY

ACCOMPANIED BY DWGS. See sheet 1 for this structure

DRAFTER: E. Leon
DESIGNER: Robert Kaspari
CHECKER: Steve Garlick
REVIEWER: R. Grubbs

STRUCTURAL REGISTERED PROFESSIONAL ENGINEER 12560 OREGON JULY 13, 1994 ROBERT V. KASPARI

RENEWS: 6/30/2011

OREGON DEPARTMENT OF TRANSPORTATION
BRIDGE ENGINEERING HEADQUARTERS
355 Capitol St NE, Rm 301
Salem, OR 97301-3871
(503) 986-4200

STRUCTURE NO. 20861
DATE August - 2010
CALC. BOOK 5743

CALAPOOYA CREEK, HWY 231
OR138W: DODGE CR/CALAPOOYA CR BRIDGE REPLACEMENTS
ELKTON-SUTHERLIN HWY 138, MP 22.10
DOUGLAS COUNTY

STEEL GIRDER - SPAN 2

SHEET 10 OF 20
DRAWING NO. 84343

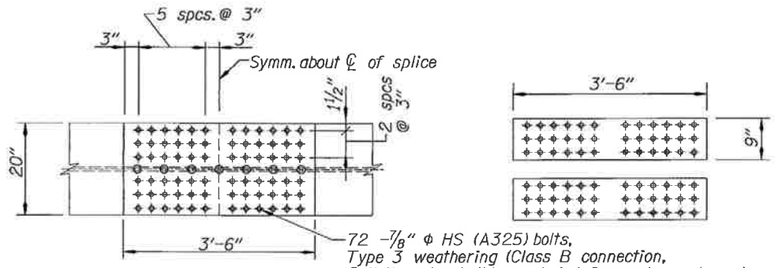

TOP FLANGE PLAN

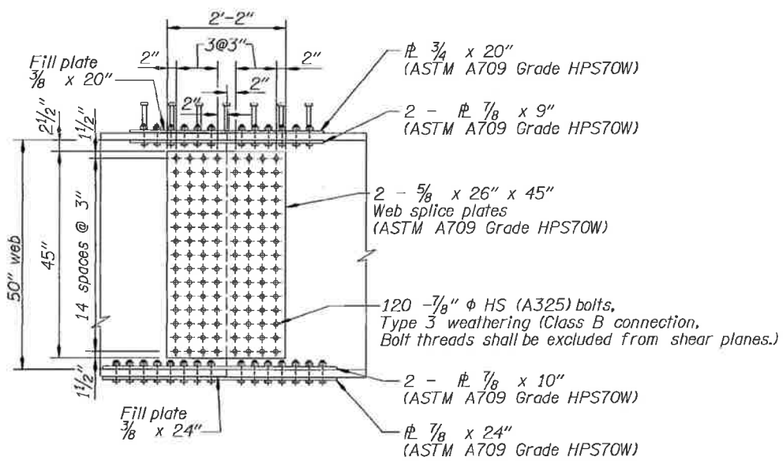

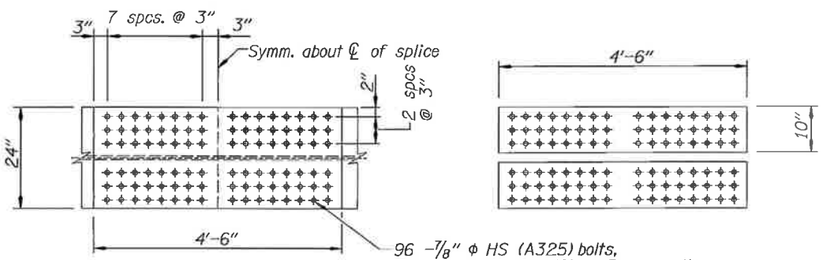

BOTTOM FLANGE PLAN

FIELD SPLICE DETAILS

No Scale

Note:
See dwg. 84340 and
84342 for splice location.

NOTES:

All longitudinal dimensions are on a horizontal line - adjust for superelevation and grade.
All stiffeners and beam ends are to be vertical in final erected position.
Web thickness shown may be increased up to 1/16", at no additional cost to the State.
Additional compression flange weld splices will be permitted at locations approved by the engineer.
Structural steel shall conform to ASTM A709 (AASHTO M270) Grade HPS70W, unless noted otherwise.
For the purpose of charpy toughness testing and welding inspection/repair, etc., main load carrying members are Beams A1-A4, B1-B4.

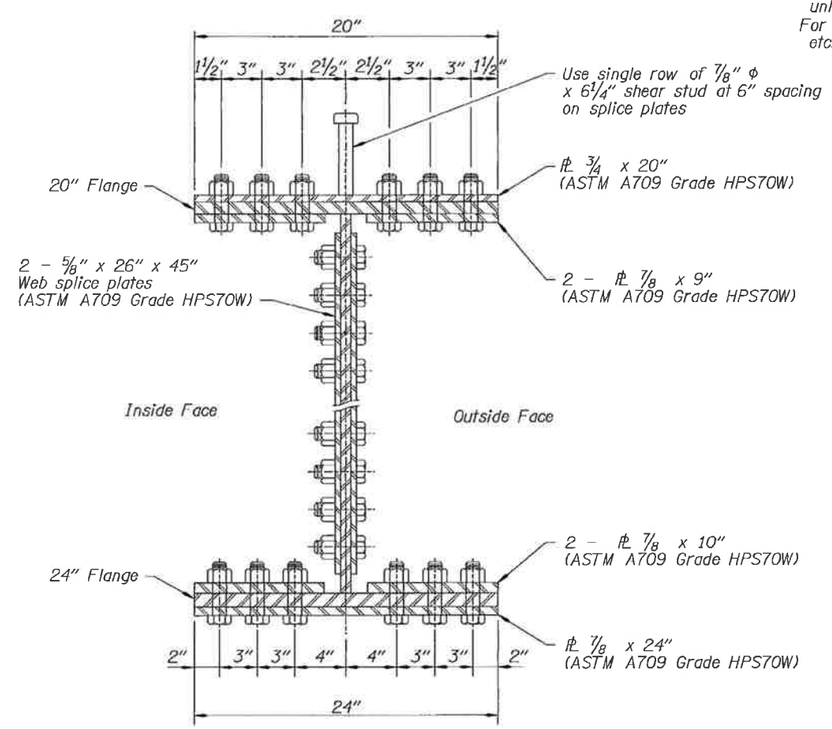

FIELD SPLICE SECTION

No Scale

SCALE WARNING

If scale bar doesn't measure one inch then drawing is not to scale

	DATE	REVISION	BY

ACCOMPANIED BY DWGS. See sheet 1 for this structure

DRAFTER: E. Leon
DESIGNER: Robert Kaspari
CHECKER: Steve Garlick
REVIEWER: R. Grubbs

STRUCTURAL REGISTERED PROFESSIONAL ENGINEER 12560 OREGON JULY 13, 1984 ROBERT V. KASPARI
RENEWS: 6/30/2011

OREGON DEPARTMENT OF TRANSPORTATION
BRIDGE ENGINEERING HEADQUARTERS
355 Capitol St NE, Rm 301
Salem, OR 97301-3871
(503) 986-4200

STRUCTURE NO. 20861
DATE August - 2010
CALC. BOOK 5743

CALAPOOYA CREEK, HWY 231
OR138W: DODGE CR/CALAPOOYA CR BRIDGE REPLACEMENTS
ELKTON-SUTHERLIN HWY 138, MP 22.10
DOUGLAS COUNTY

STEEL GIRDER SPLICE

SHEET 11 OF 20
DRAWING NO. 84344

F:\ODOT_DATA\PROJECTS\14813(calapooya creek)\EJL20861L.dgn :: Default 9/8/2010 3:56:31 PM hwye03b 1:16 - 11Splice

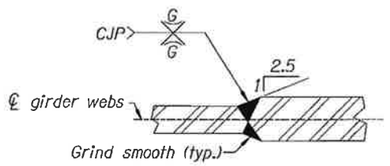

UNEQUAL THICKNESS WEBS

SHOP WEB SPLICES

No Scale

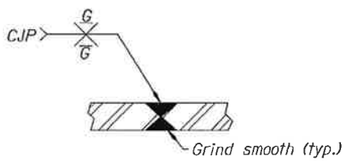

COMPRESSION FLANGE SPLICE OR WEB OF EQUAL THICKNESS

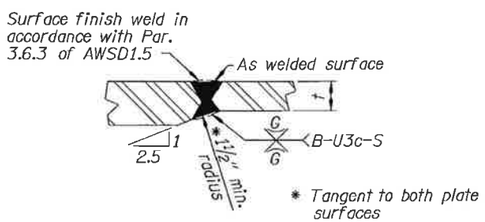

FLANGE SPLICE

SHOP FLANGE SPLICES

No Scale

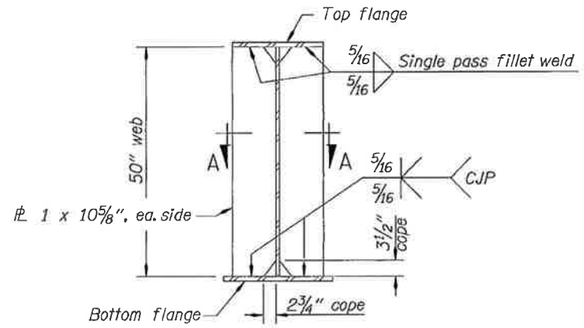

BEARING STIFFENER (BENTS 1, 2 & 3)

No Scale

Note: Bearing stiffeners are located along the skew.

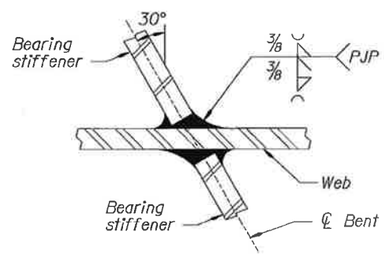

SECTION A-A

No Scale

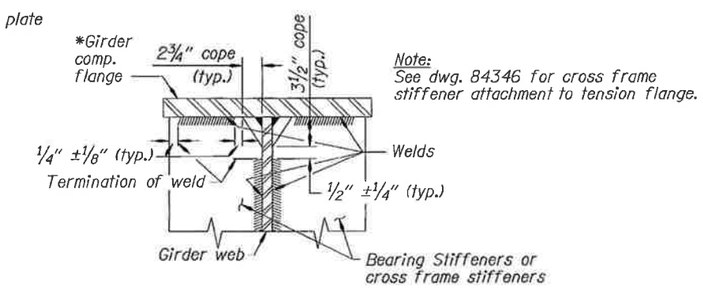

Note:
See dwg. 84346 for cross frame stiffener attachment to tension flange.

WELD TERMINATION DETAIL

No Scale

Note - A:
Use ASTM A706 for all welded splices, except ASTM A615 Grade 60, ASTM A82 or ASTM A496 may be used if copies of the chemical composition analysis are submitted and approved as weldable by the Engineer. Anchor spirals at each end or discontinuity with one extra turn and a splice to itself as shown. Where permitted on plans, provide closed hoops conforming to the requirements of this detail. Lapped splice is not allowed within 1/6 the column height or max. column cross sectional dimension or 18" from top of footing or bottom of cap beam, or in columns with spirals less than 3'-0" in diameter.

Note: Make flare weld in direction shown.

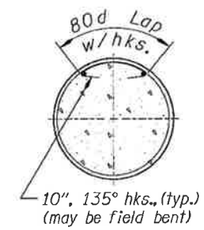

LAPPED SPLICE
See Note A

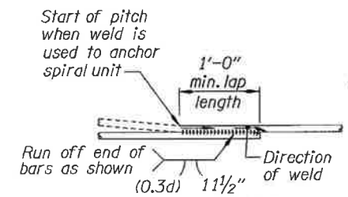

WELDED SPLICE
See Note A

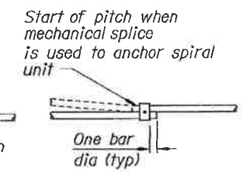

MECHANICAL SPLICE
(Not allowed for ASTM A82 spirals)

SPIRAL SPLICE / TERMINATION DETAIL

No Scale

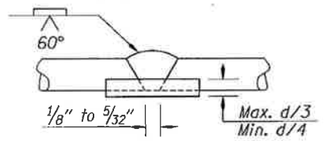

ALTERNATE WELDED SPLICE

(Except ASTM A82)

Weld reinforcing steel splices in accordance with the current edition of ANSI/AWS D1.4. "Structural Welding Code Reinforcing Steel"

No Scale

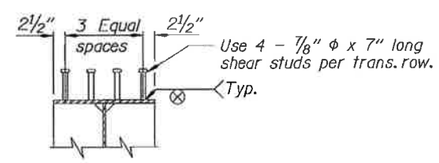

SHEAR STUD DETAIL

No Scale

SCALE WARNING
If scale bar doesn't measure one inch then drawing is not to scale

	DATE	REVISION	BY

ACCOMPANIED BY DWGS. See sheet 1 for this structure

DRAFTER: E. Leon
DESIGNER: Robert Kaspari
CHECKER: Steve Garlick
REVIEWER: R. Grubbs

STRUCTURAL REGISTERED PROFESSIONAL ENGINEER 12560 OREGON JULY 13, 1984 ROBERT V. KASPARI
RENEWS: 6/30/2011

OREGON DEPARTMENT OF TRANSPORTATION
BRIDGE ENGINEERING HEADQUARTERS
355 Capitol St NE, Rm 301
Salem, OR 97301-3871
(503) 986-4200

STRUCTURE NO. 20861
DATE August - 2010
CALC. BOOK 5743

CALAPOOYA CREEK, HWY 231
OR138W: DODGE CR/CALAPOOYA CR BRIDGE REPLACEMENTS
ELKTON-SUTHERLIN HWY 138, MP 22.10
DOUGLAS COUNTY

WELDING DETAILS

SHEET 12 OF 20
DRAWING NO. 84345

F:\ODOT_DATA\PROJECTS\14813(calapooya creek)\EJL20861L.dgn :: Default 9/8/2010 3:56:38 PM hwye03b 1:16 - 12Welds

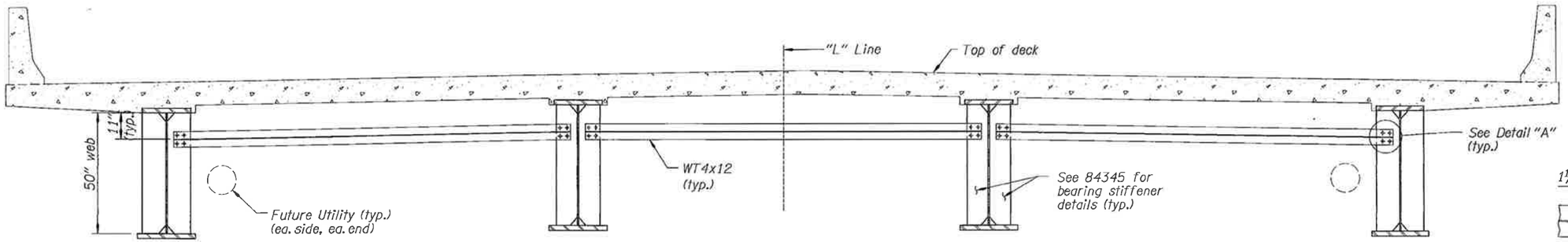

(82) END CROSS FRAME DETAILS
(2 Places) (Bents 1 and 3)
Scale: 1/2" = 1'-0"

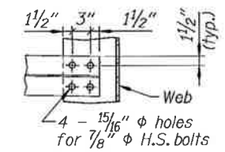

DETAIL "A"
No Scale

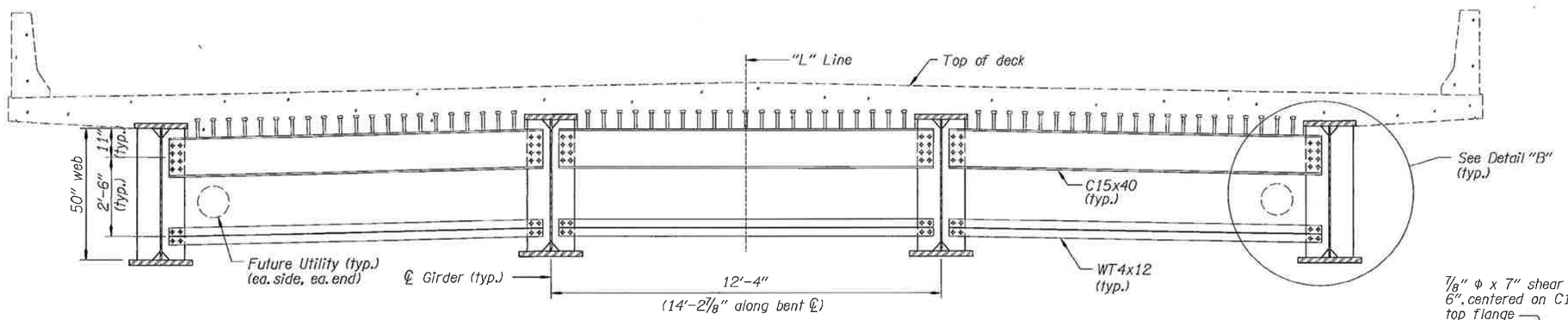

(83) BENT 2 CROSS FRAME DETAILS
(1 Place) Scale: 1/2" = 1'-0"

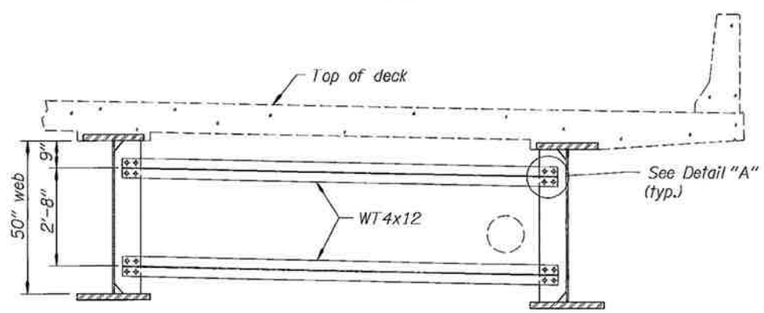

(84) PARTIAL CROSS FRAME A
(3 Places) Scale: 1/2" = 1'-0"

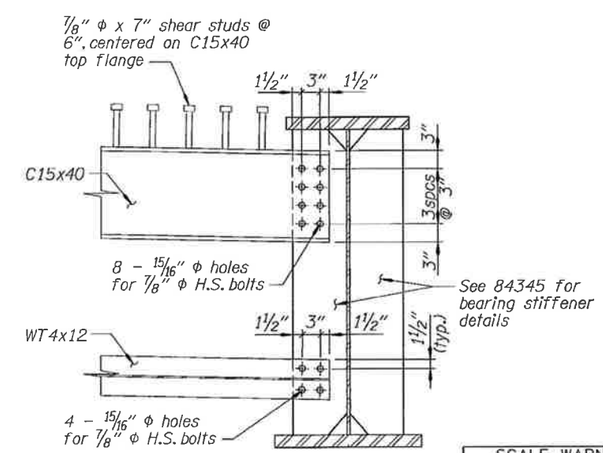

DETAIL "B"
No Scale

Note:
See dwg. 84347 for notes.

SCALE WARNING
If scale bar doesn't measure one inch then drawing is not to scale

	DATE	REVISION	BY

ACCOMPANIED BY DWGS. See sheet 1 for this structure

DRAFTER: E. Leon
DESIGNER: Robert Kaspari
CHECKER: Steve Garlick
REVIEWER: R. Grubbs

STRUCTURAL REGISTERED PROFESSIONAL ENGINEER 12560 OREGON JULY 13, 1984 ROBERT V. KASPARI
RENEWS: 6/30/2010

OREGON DEPARTMENT OF TRANSPORTATION
BRIDGE ENGINEERING HEADQUARTERS
355 Capitol St NE, Rm 301
Salem, OR 97301-3871
(503) 986-4200

STRUCTURE NO. 20861
DATE Jan. - 2010
CALC. BOOK 5743

CALAPOOYA CREEK, HWY 231
OR138W: DODGE CR/CALAPOOYA CR BRIDGE REPLACEMENTS
ELKTON-SUTHERLIN HWY 138, MP 22.10
DOUGLAS COUNTY

BENT CROSS FRAMES

SHEET 13 OF 20
DRAWING NO. 84346

F:\ODOT_DATA\PROJECTS\14813(calapooya creek)\EJL20861L.dgn :: Default 8/10/2010 8:44:08 AM hwye03b 1:24 - 13frame2

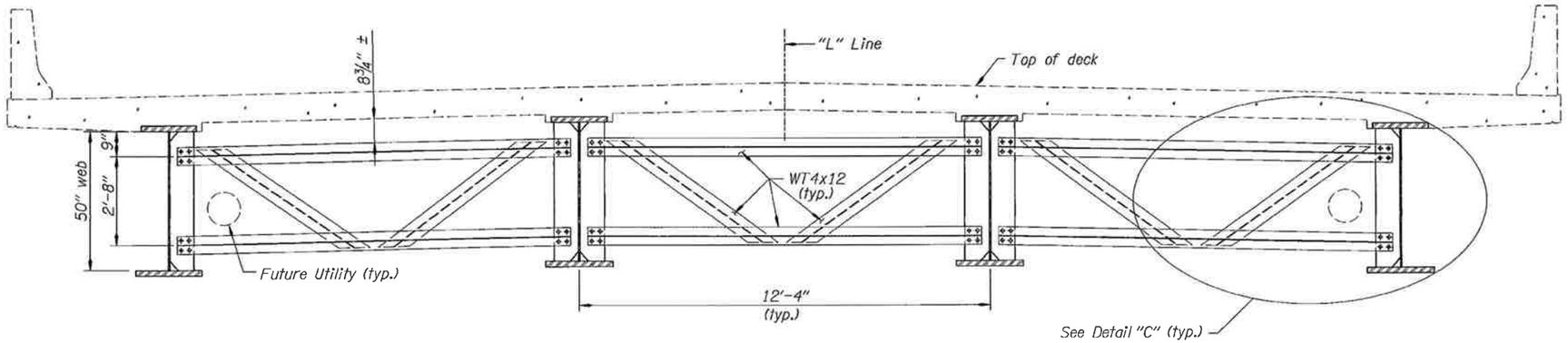

(85) INTERMEDIATE CROSS FRAME
(10 Places) Scale: ½" = 1'-0"

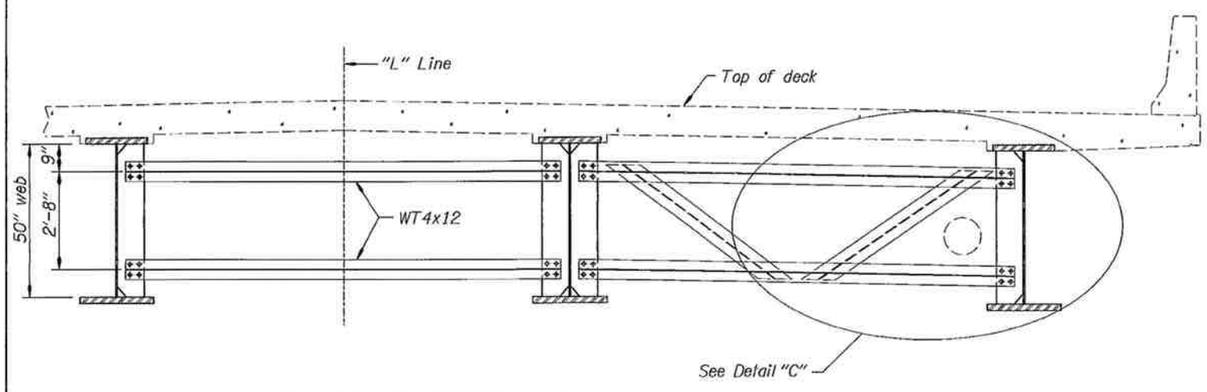

(86) PARTIAL CROSS FRAME B
(1 Place) Scale: ½" = 1'-0"

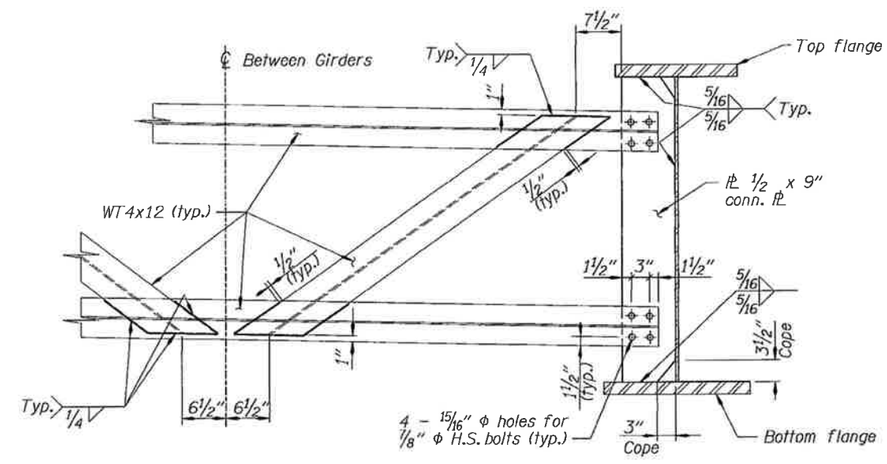

DETAIL "C"
No Scale

Notes:
Structural steel in cross frames shall conform to ASTM A709 (AASHTO M270) Grade 50W unless noted otherwise.
See dwgs. 84342 and 84343 for location of Tension (T) and Compression (C) flanges.
Steel to steel contact surfaces shall be cleaned and coated on welded connections prior to bolting per specifications.
Stop all fillet welds ±¼" clear from end of plate, unless noted otherwise.
Seal all weld terminations and unwelded connections of cross frames with structural steel caulking from the QPL.

SCALE WARNING
If scale bar doesn't measure one inch then drawing is not to scale

DATE	REVISION	BY

ACCOMPANIED BY DWGS. See sheet 1 for this structure

DRAFTER: E. Leon
DESIGNER: Robert Kaspari
CHECKER: Steve Garlick
REVIEWER: R. Grubbs

STRUCTURAL REGISTERED PROFESSIONAL ENGINEER 12560 OREGON JULY 13, 1994 ROBERT V. KASPARI
RENEWS: 6/30/2011

OREGON DEPARTMENT OF TRANSPORTATION
BRIDGE ENGINEERING HEADQUARTERS
355 Capitol St NE, Rm 301
Salem, OR 97301-3871
(503) 986-4200

STRUCTURE NO. 20861
DATE August - 2010
CALC. BOOK 5743

CALAPOOYA CREEK, HWY 231
OR138W: DODGE CR/CALAPOOYA CR BRIDGE REPLACEMENTS
ELKTON-SUTHERLIN HWY 138, MP 22.10
DOUGLAS COUNTY

INTERMEDIATE CROSS FRAME

SHEET 14 OF 20
DRAWING NO. 84347

F:\ODOT_DATA\PROJECTS\14813(calapooya creek)\EJL20861L.dgn :: Default 9/8/2010 3:56:51 PM hwye03b 1:24 - 14Xframe

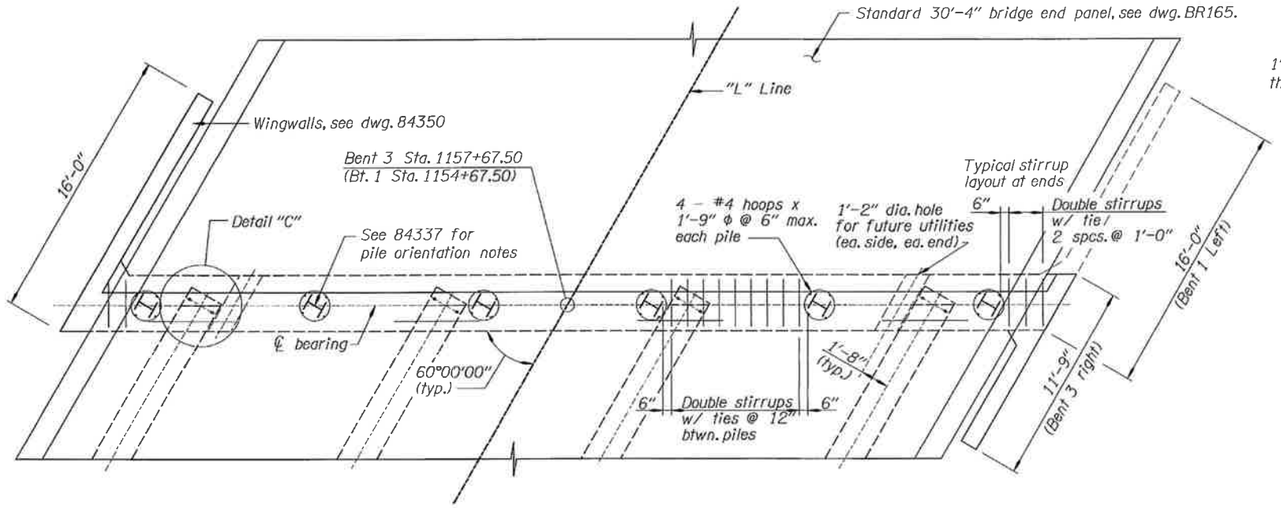

BENT 3: PLAN

Scale: 1/4" = 1'-0"

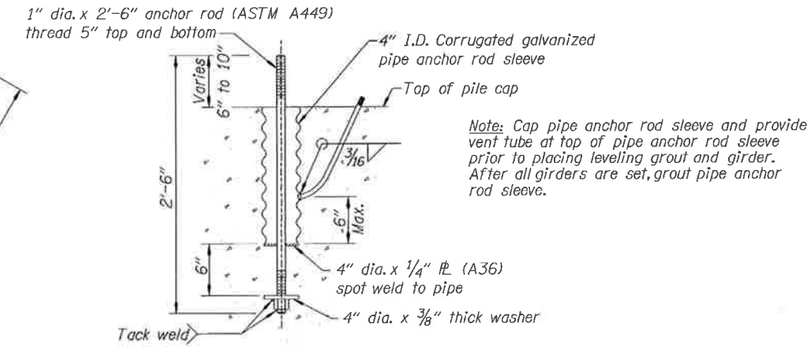

Note: Cap pipe anchor rod sleeve and provide vent tube at top of pipe anchor rod sleeve prior to placing leveling grout and girder. After all girders are set, grout pipe anchor rod sleeve.

ANCHOR ROD DETAIL

No Scale

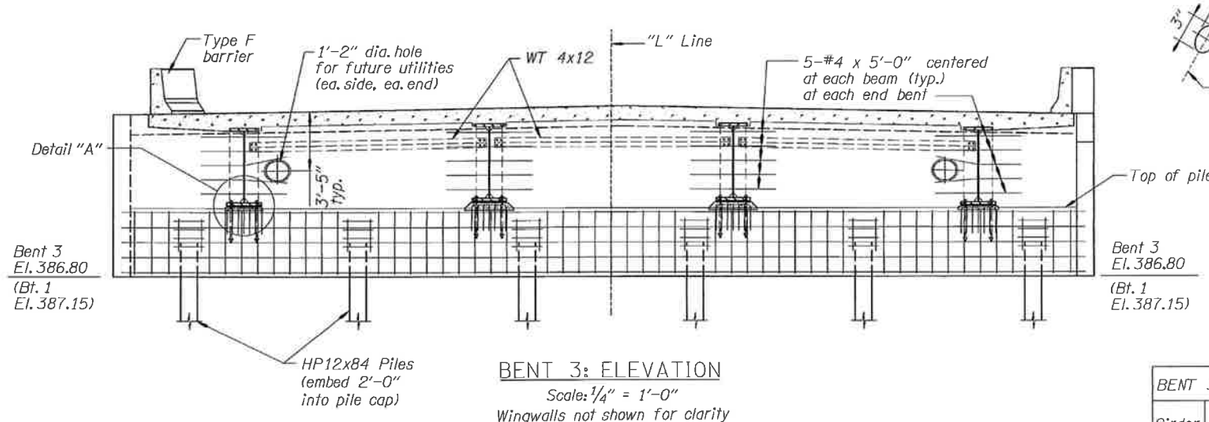

BENT 3: ELEVATION

Scale: 1/4" = 1'-0"

Wingwalls not shown for clarity

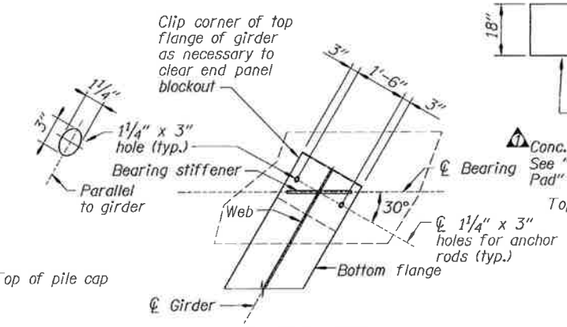

DETAIL "C"

Top flange not shown for clarity

Scale: 1/2" = 1'-0"

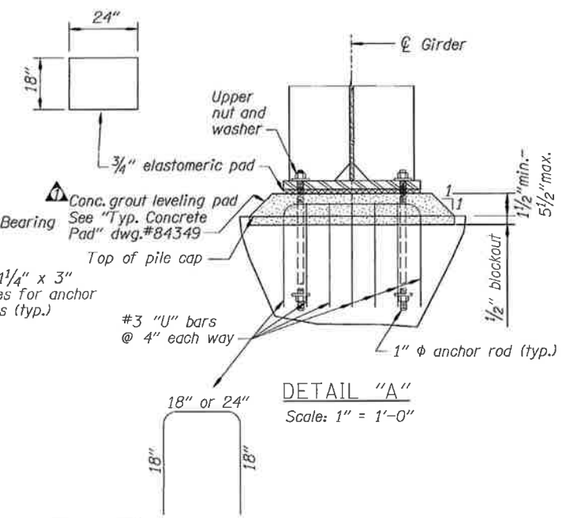

DETAIL "A"

Scale: 1" = 1'-0"

BENT 3 BEAM SEAT ELEVATION	
Girder	Elevation top Concrete pad
B1	391.08
B2	391.28
B3	391.23
B4	390.93

BENT 1 BEAM SEAT ELEVATION	
Girder	Elevation top Concrete pad
A1	391.26
A2	391.54
A3	391.58
A4	391.36

SCALE WARNING

If scale bar doesn't measure one inch then drawing is not to scale

	DATE	REVISION	BY
2	11-05-10	widen conc. pad	EL
1			

ACCOMPANIED BY DWGS. See sheet 1 for this structure

DRAFTER: E. Leon
DESIGNER: Robert Kaspari
CHECKER: Steve Garlick
REVIEWER: R. Grubbs
RENEWS:

STRUCTURAL REGISTERED PROFESSIONAL ENGINEER 12560 OREGON JULY 13, 1988 ROBERT V. KASPARI

OREGON DEPARTMENT OF TRANSPORTATION

BRIDGE ENGINEERING HEADQUARTERS
355 Capitol St NE, Rm 301
Salem, OR 97301-3871
(503) 986-4200

STRUCTURE NO. 20861
DATE August - 2010
CALC. BOOK 5743

CALAPOOYA CREEK, HWY 231
OR138W: DODGE CR/CALAPOOYA CR BRIDGE REPLACEMENTS
ELKTON-SUTHERLIN HWY 138, MP 22.10
DOUGLAS COUNTY

BENT 3 (BENT 1 SIMILAR)

SHEET 15 OF 20

DRAWING NO. 84348

F:\ODOT_DATA\PROJECTS\14813(calapooya creek)\EJL20861L.dgn :: Default 11/8/2010 12:14:28 PM hwye03b 1:48 - 15Bent 3

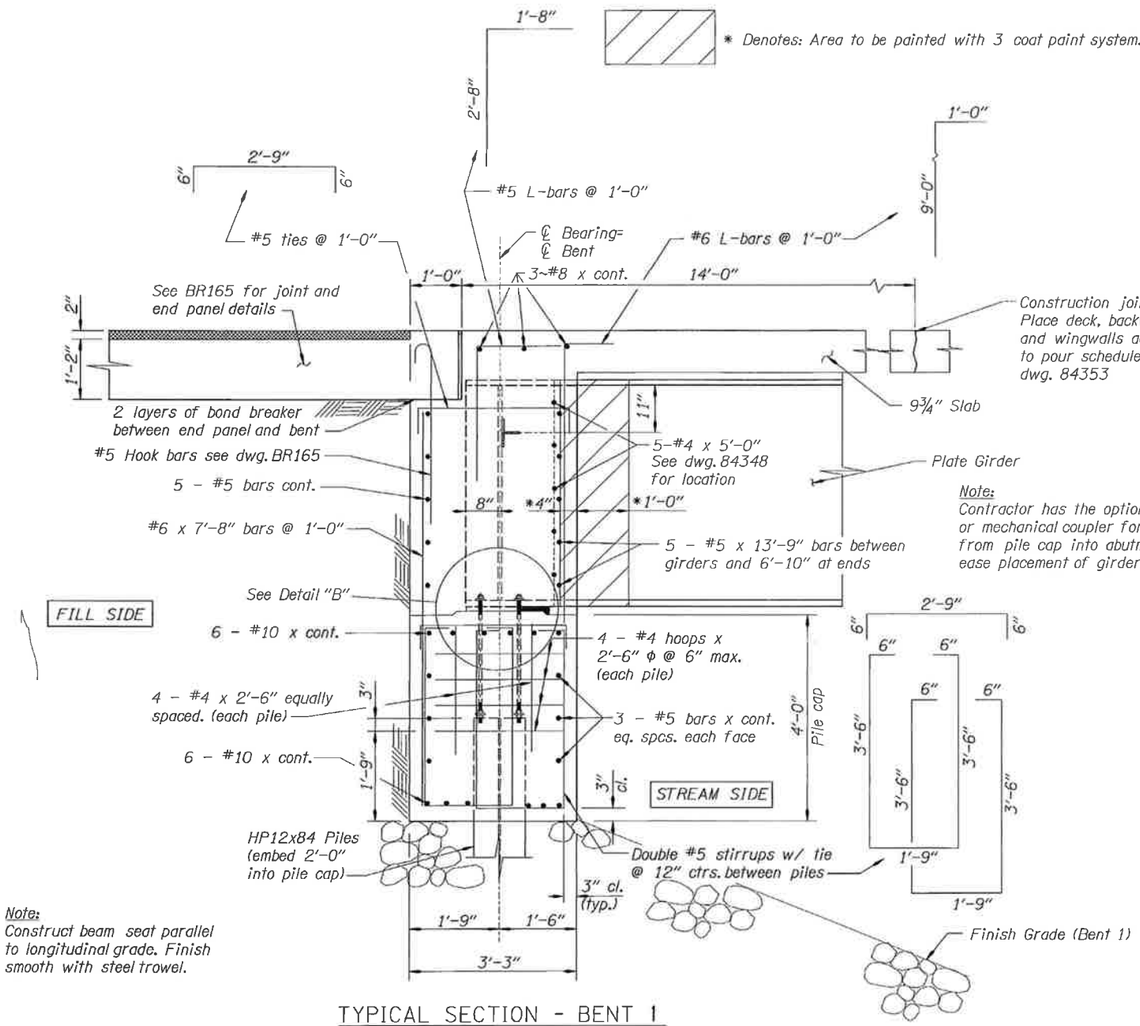

Note:
Construct beam seat parallel to longitudinal grade. Finish smooth with steel trowel.

TYPICAL SECTION - BENT 1
(Bent 3 similar)
Scale: ¾" = 1'-0"

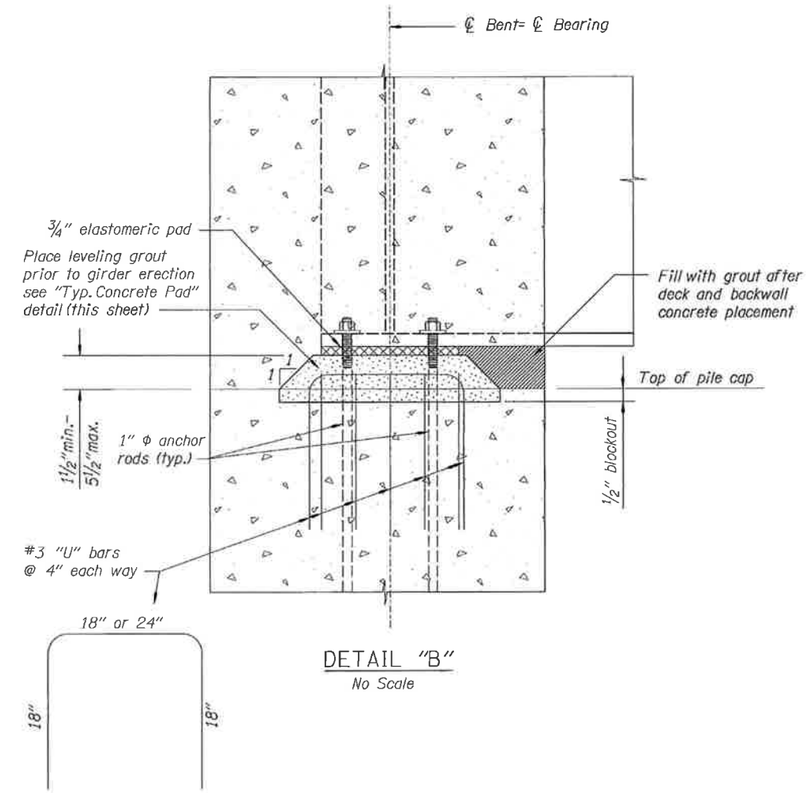

DETAIL "B"
No Scale

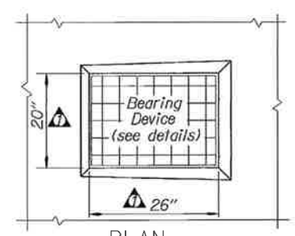

PLAN

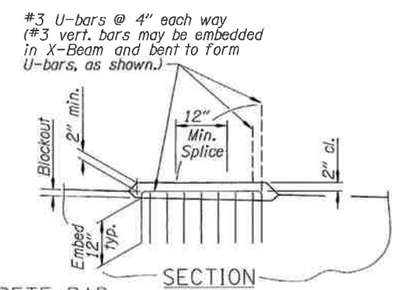

SECTION

TYPICAL CONCRETE PAD
No Scale

SCALE WARNING
If scale bar doesn't measure one inch then drawing is not to scale

	DATE	REVISION	BY
1	11-05-10	removed cl., added dim. and widen conc. pad	EL

ACCOMPANIED BY DWGS. See sheet 1 for this structure

DRAFTER: E. Leon
DESIGNER: Robert Kaspari
CHECKER: Steve Garlick
REVIEWER: R. Grubbs

STRUCTURAL REGISTERED PROFESSIONAL ENGINEER 12560 OREGON JULY 13, 1984 ROBERT V. KASPARI
RENEWS:

OREGON DEPARTMENT OF TRANSPORTATION
BRIDGE ENGINEERING HEADQUARTERS
355 Capitol St NE, Rm 301
Salem, OR 97301-3871
(503) 986-4200

STRUCTURE NO. 20861
DATE August - 2010
CALC. BOOK 5743

CALAPOOYA CREEK, HWY 231
OR138W: DODGE CR/CALAPOOYA CR BRIDGE REPLACEMENTS
ELKTON-SUTHERLIN HWY 138, MP 22.10
DOUGLAS COUNTY

BENT 1 SECTION (Bent 3 Similar)

SHEET 16 OF 20
DRAWING NO. 84349

F:\ODOT_DATA\PROJECTS\14813(calapooya creek)\EJL20861L.dgn :: Default 11/8/2010 12:14:23 PM hwye03b 1:16 - 16BentDetails

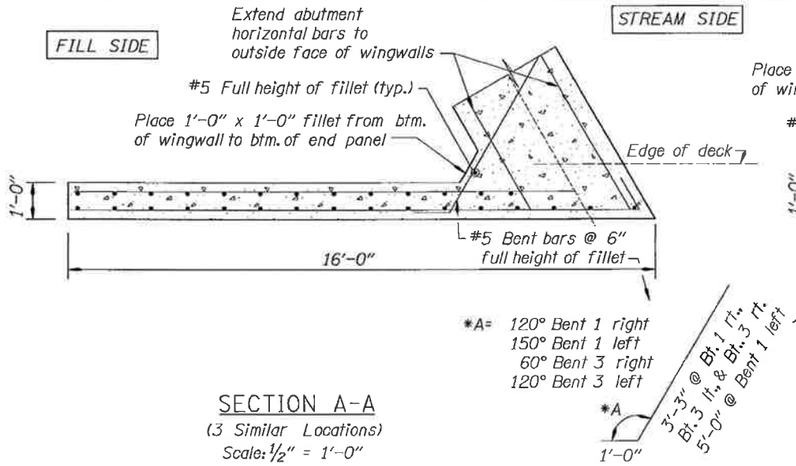

SECTION A-A
(3 Similar Locations)
Scale: 1/2" = 1'-0"

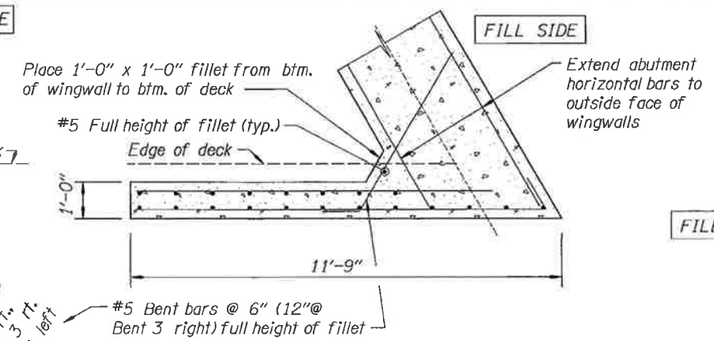

SECTION C-C
(1 Location)
Scale: 1/2" = 1'-0"

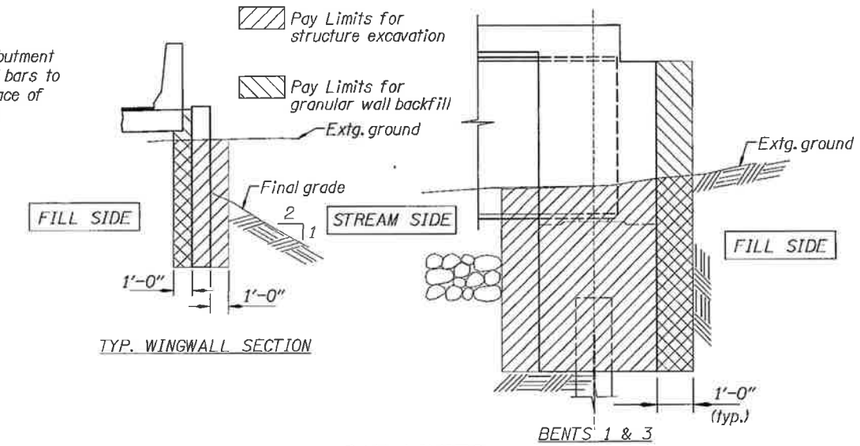

PAY LIMITS
STRUCTURAL EXCAVATION & GRANULAR WALL BACKFILL
No Scale

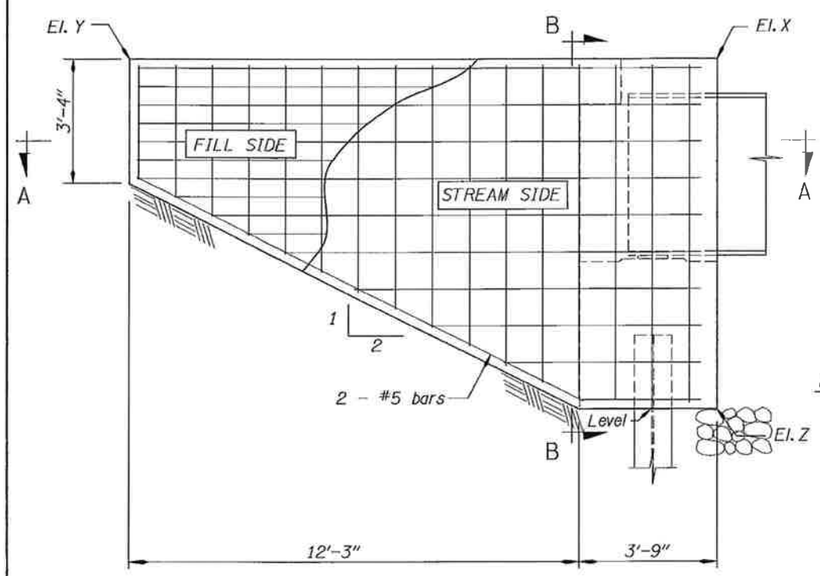

ELEVATION - Bent 1 Wingwall Right
(3 Similar Locations)
Scale: 1/2" = 1'-0"

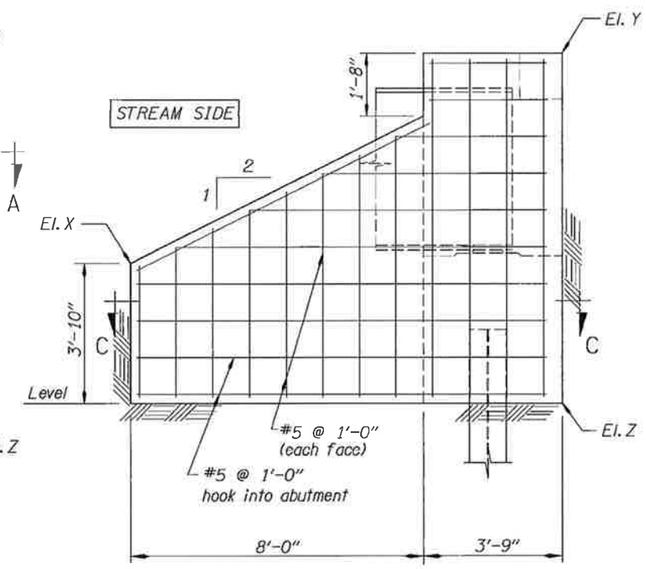

ELEVATION - Bent 3 Wingwall Right
(1 Location)
Scale: 1/2" = 1'-0"

WINGWALL ELEVATIONS (feet)				
Location	Offset	X	Y	Z
Bent 1	Left	396.61	396.61	387.15
Bent 1	Right	396.74	396.74	387.15
Bent 3	Left	396.46	396.46	386.80
Bent 3	Right	390.63	396.29	386.80

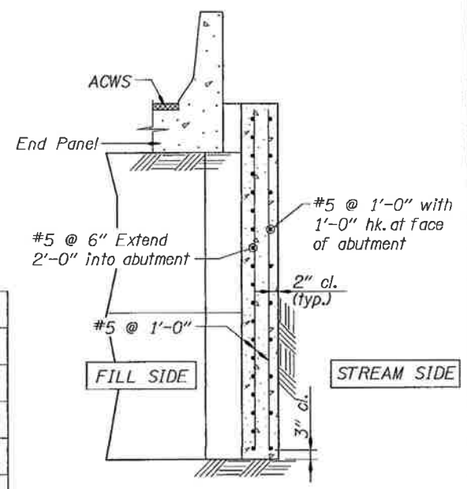

SECTION B-B
Scale: 1/2" = 1'-0"

SCALE WARNING
If scale bar doesn't measure one inch then drawing is not to scale

DATE	REVISION	BY

ACCOMPANIED BY DWGS. See sheet 1 for this structure

DRAFTER: E. Leon
DESIGNER: Robert Kaspari
CHECKER: Steve Garlick
REVIEWER: R. Grubbs

STRUCTURAL REGISTERED PROFESSIONAL ENGINEER 12560 OREGON JULY 13, 1988 ROBERT V. KASPARI
RENEWS: 6/30/2011

OREGON DEPARTMENT OF TRANSPORTATION
BRIDGE ENGINEERING HEADQUARTERS
355 Capitol St NE, Rm 301
Salem, OR 97301-3871
(503) 986-4200

STRUCTURE NO. 20861
DATE August - 2010
CALC. BOOK 5743

CALAPOOYA CREEK, HWY 231
OR138W: DODGE CR/CALAPOOYA CR BRIDGE REPLACEMENTS
ELKTON-SUTHERLIN HWY 138, MP 22.10
DOUGLAS COUNTY

WINGWALLS

SHEET 17 OF 20
DRAWING NO. 84350

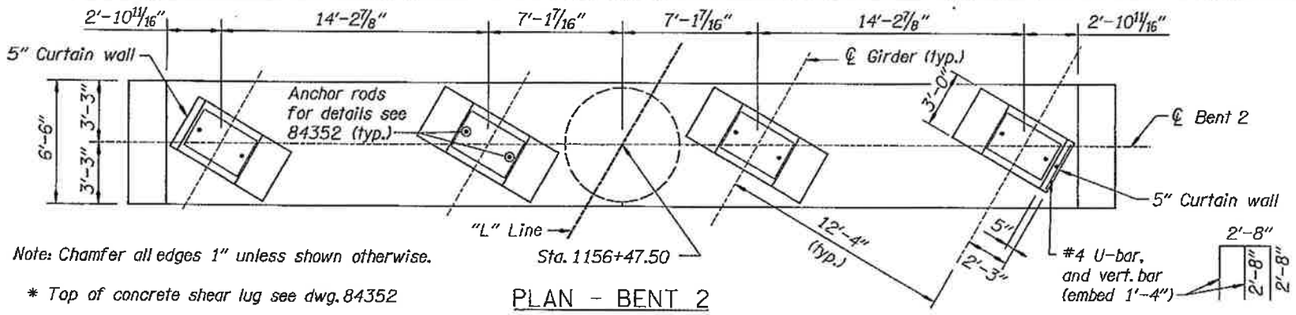

Note: Chamfer all edges 1" unless shown otherwise.

* Top of concrete shear lug see dwg. 84352

** See spiral termination detail on dwg. 84345

PLAN - BENT 2

Scale: 1/4" = 1'-0"

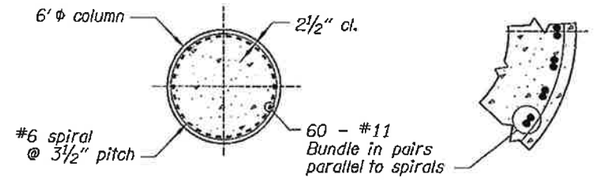

SECTION B-B

Scale: 1/4" = 1'-0"

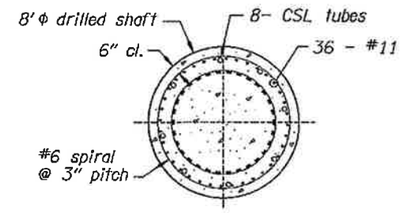

SECTION C-C

Scale: 1/4" = 1'-0"

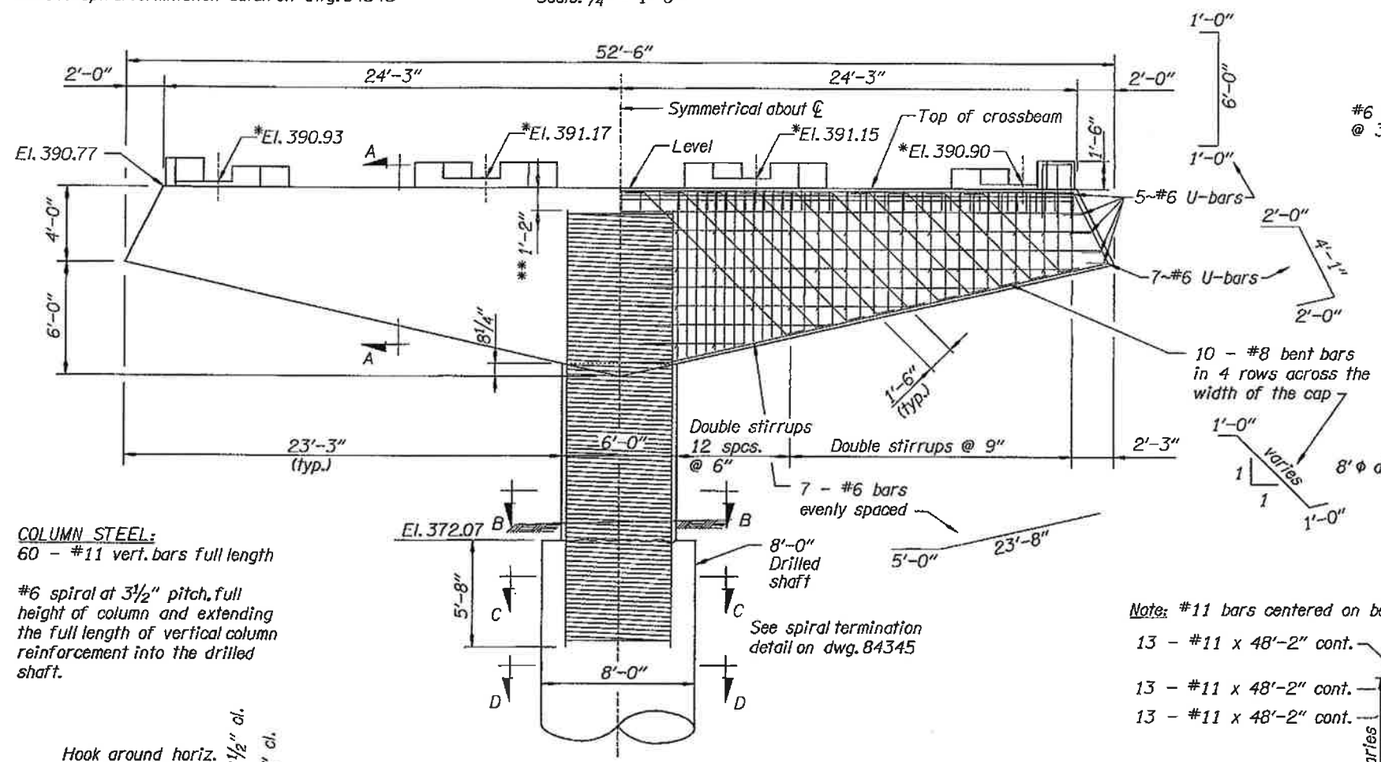

COLUMN STEEL:
60 - #11 vert. bars full length

#6 spiral at 3 1/2" pitch, full height of column and extending the full length of vertical column reinforcement into the drilled shaft.

ELEVATION - BENT 2

Scale: 1/4" = 1'-0"

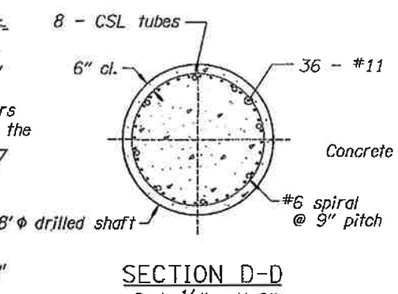

SECTION D-D

Scale: 1/4" = 1'-0"

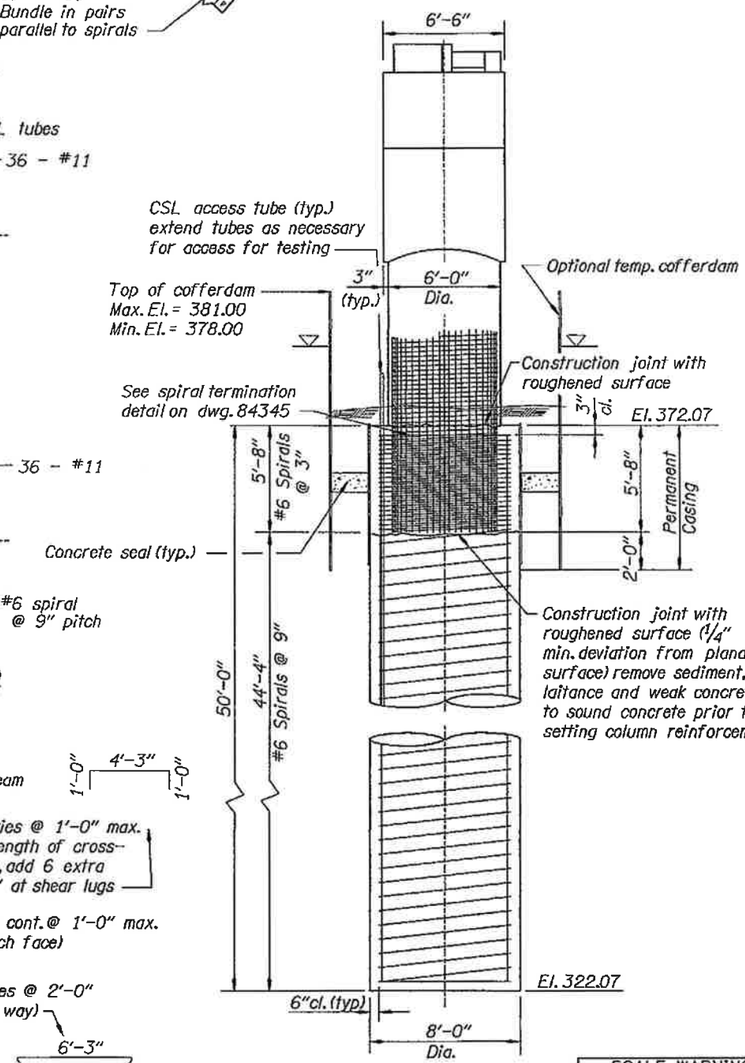

SIDE VIEW - BENT 2

Scale: 1/4" = 1'-0"

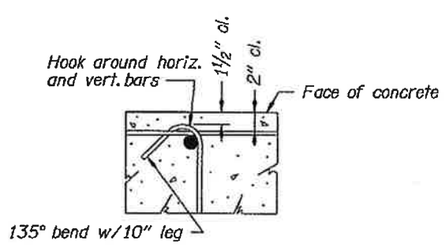

TIE BAR DETAIL

No Scale

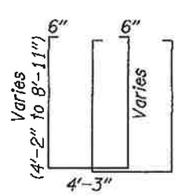

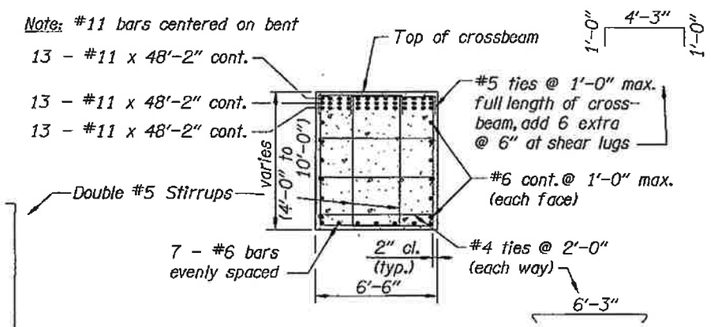

SECTION A-A

Scale: 1/4" = 1'-0"

SCALE WARNING

If scale bar doesn't measure one inch then drawing is not to scale

	DATE	REVISION	BY

ACCOMPANIED BY DWGS. See sheet 1 for this structure

DRAFTER: E. Leon
DESIGNER: Robert Kaspari
CHECKER: Steve Garlick
REVIEWER: R. Grubbs

STRUCTURAL REGISTERED PROFESSIONAL ENGINEER 12560 OREGON JULY 13, 1984 ROBERT V. KASPARI
RENEWS: 6/30/2011

OREGON DEPARTMENT OF TRANSPORTATION
BRIDGE ENGINEERING HEADQUARTERS
355 Capitol St NE, Rm 301
Salem, OR 97301-3871
(503) 986-4200

STRUCTURE NO. 20861
DATE August - 2010
CALC. BOOK 5743

CALAPOOYA CREEK, HWY 231
OR138W: DODGE CR/CALAPOOYA CR BRIDGE REPLACEMENTS
ELKTON-SUTHERLIN HWY 138, MP 22.10
DOUGLAS COUNTY

BENT 2

SHEET 18 OF 20

DRAWING NO. 84351

F:\ODOT_DATA\PROJECTS\14813(calapooya creek)\EJL20861L.dgn :: Default 9/8/2010 3:57:18 PM hwye03b 1:48- 18Bent 2

BEARING AND BEAM PLACEMENT CONSTRUCTION SEQUENCE:

Place 1/4" layer of non-epoxy grout in elastomeric bearing pad footprint, place the elastomeric bearing pad and place the beam before the grout is fully set to obtain uniform bearing on the pedestal.

Remove any excess protruding grout immediately after placing the beam.

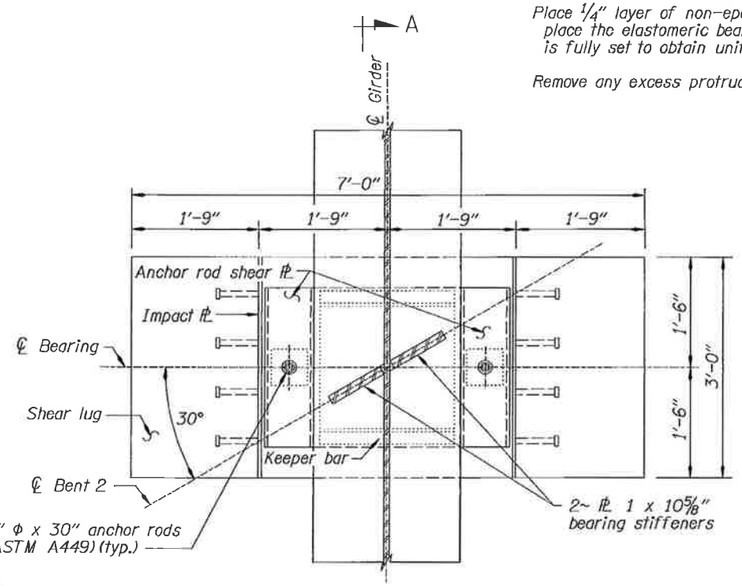

PLAN

Note: Bearing pads shall be placed normal to longitudinal beam centerline.

Longitudinal slope of top of concrete pads shall match deck grade line.

Transverse slope of top of concrete pads shall be level.

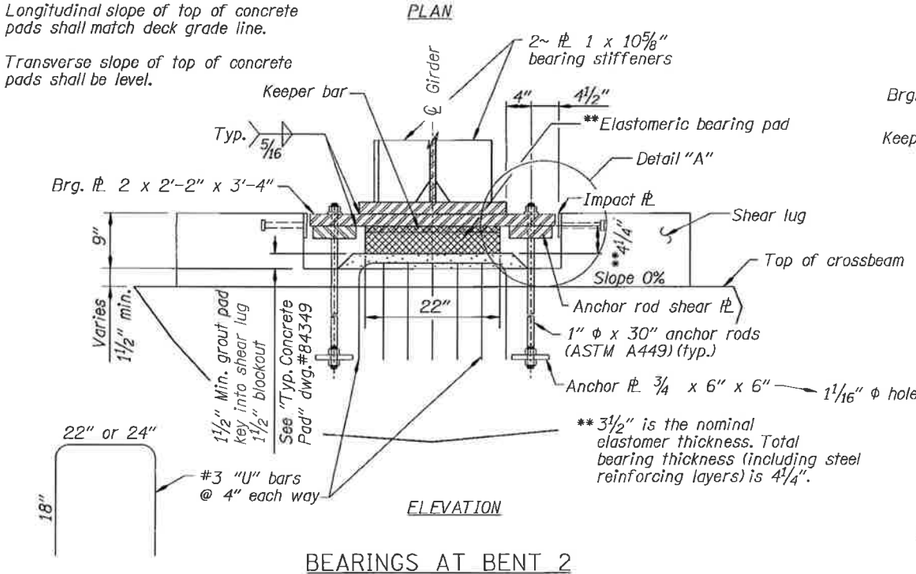

ELEVATION

BEARINGS AT BENT 2
No Scale

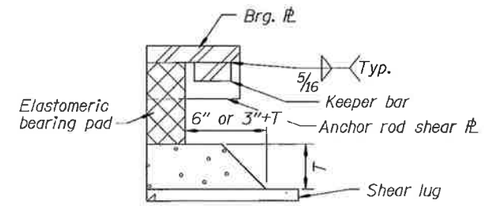

Note: Maintain a 1/2" gap between the bearing pad and keeper bar, and between the bearing ℔ and impact ℔.

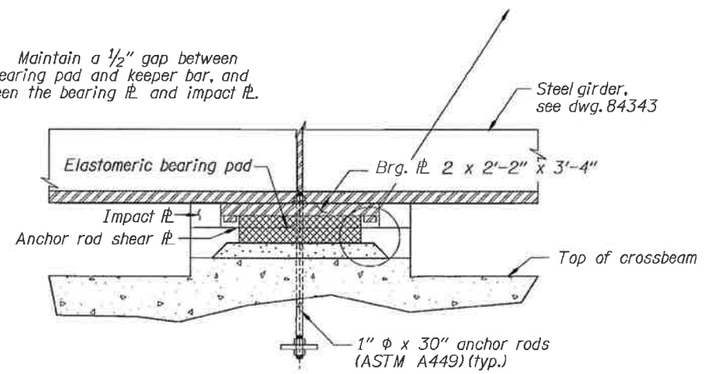

SECTION A-A
No Scale

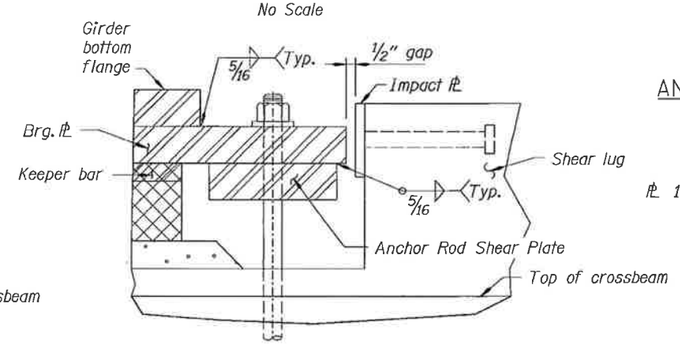

DETAIL "A"
No Scale

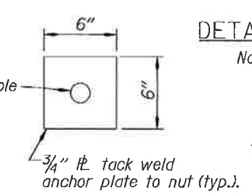

ANCHOR PLATE
(8 Required)
No Scale

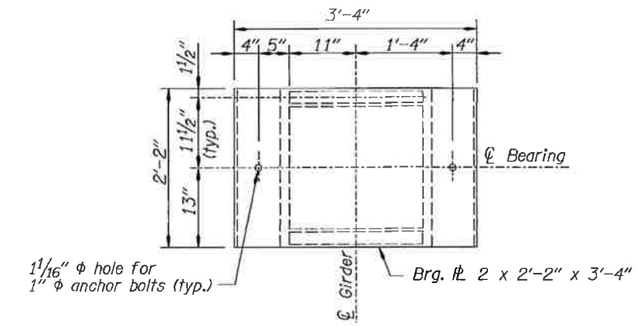

BEARING PLATE
(4 Required)
No Scale

Note: Reinforced elastomeric pads are designed using AASHTO Method B

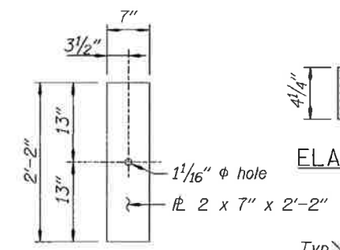

ANCHOR ROD SHEAR PLATE
(8 Required)
No Scale

KEEPER BAR
(8 Required)
No Scale

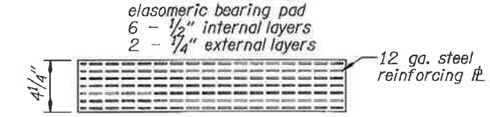

ELASTOMERIC BEARING PAD
(4 Required)
No Scale

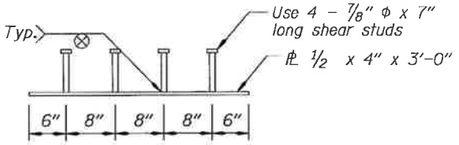

IMPACT PLATE
(6 Required)
No Scale

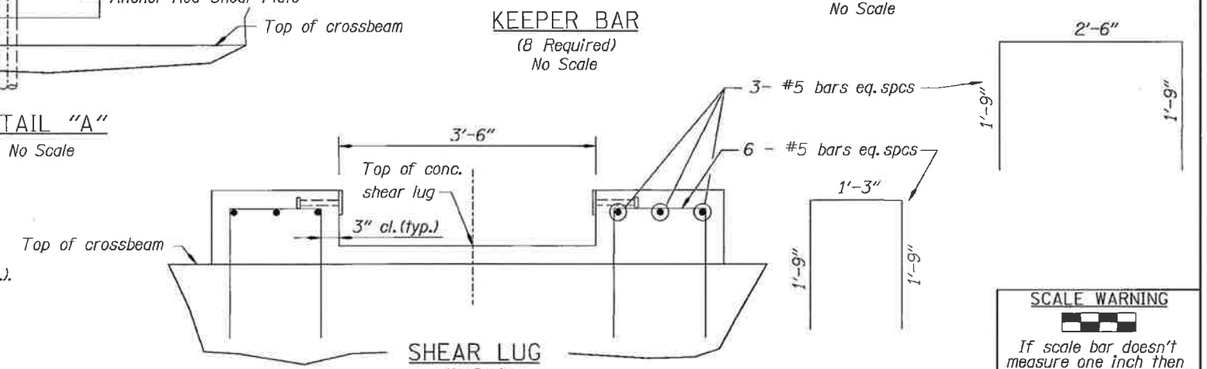

SHEAR LUG
No Scale

SCALE WARNING
If scale bar doesn't measure one inch then drawing is not to scale

DATE	REVISION	BY

ACCOMPANIED BY DWGS. See sheet 1 for this structure

DRAFTER: E. Leon
DESIGNER: Robert Kaspari
CHECKER: Steve Garlick
REVIEWER: R. Grubbs

STRUCTURAL REGISTERED PROFESSIONAL ENGINEER 12360 OREGON JULY 13, 1984 ROBERT V. KASPARI
RENEWS: 6/30/2011

OREGON DEPARTMENT OF TRANSPORTATION
BRIDGE ENGINEERING HEADQUARTERS
355 Capitol St NE, Rm 301
Salem, OR 97301-3871
(503) 986-4200

STRUCTURE NO. 20861
DATE August - 2010
CALC. BOOK 5743

CALAPOOYA CREEK, HWY 231
OR138W: DODGE CR/CALAPOOYA CR BRIDGE REPLACEMENTS
ELKTON-SUTHERLIN HWY 138, MP 22.10
DOUGLAS COUNTY

BENT 2 BEARINGS AND SHEAR LUG

SHEET 19 OF 20
DRAWING NO. 84352

F:\ODOT_DATA\PROJECTS\14813(calapooya creek)\EJL20861L.dgn :: Default 9/8/2010 3:56:58 PM hwye03b 1:12 - 19Bearing

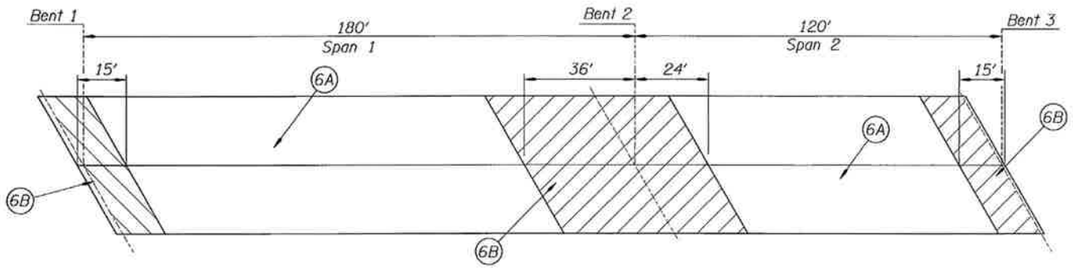

DECK POUR SCHEDULE

No Scale

Pour deck pours 6A . May be made simultaneously or seperately as desired by the contractor.
Pour deck pours 6B after a minimum of 3 days & concrete has reached 70% full strength.
Pours shall be poured full deck width.
Pours 6A will remain fully plastic until the completion of Pours 6A
No bulkheads will be allowed except at Pour 6A and Pour 6B interface as shown above.

Note: Deck concrete shall be placed and screeded ~~normal to roadway ℄~~. parallel to bent centerlines

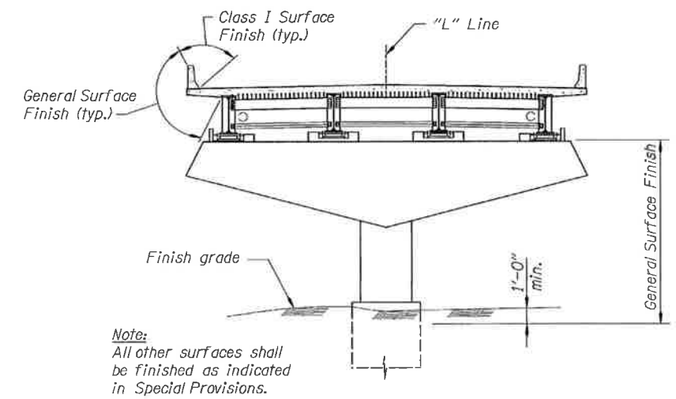

CONCRETE FINISH DETAILS

No Scale

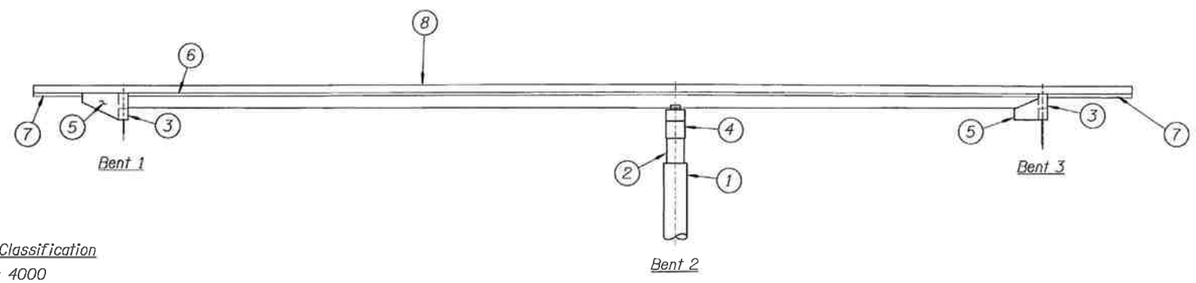

Concrete Classification
1 Class 4000
2 3 4 5 8 Class 3300
6 7 Class HPC4000

CONCRETE POUR SCHEDULE

No Scale

CONCRETE PLACEMENT NOTES:

1. Deck saw cutting equipment shall run perpendicular to the ℄ structure and concrete shall be placed full width of the deck, perpendicular to the ℄ structure.
2. Any changes to the construction sequence are subject to review and written approval from the Engineer prior to construction.

CONSTRUCTION AND CONCRETE PLACEMENT SEQUENCE

1. Place pour 1 (Bent 2 drilled shaft).
2. Place pour 2 (Bent 2 column).
3. Drive pilings at Bents 1 and 3.
4. Place pour 3 (Bents 1 and 3 pile caps).
5. Place pour 4 (Bent 2 cross beam). Make pour 4 a minimum of 3 days after pour 2. Bents 1 and 3 pile caps and Bent 2 cross beam may be poured anytime up to 7 days prior to placement of steel girders, but concrete must have reached its design strength prior to steel girder placement.
6. Place steel girders and install cross frames.
7. Place end fills at Bents 1 and 3.
8. Place pour 6 (deck pour). See deck pour schedule this sheet.
9. Place pour 5 (Bents 1 and 3 end walls and wingwalls) simultaneously with deck pour 6B, and Bent 2 shear lugs and curtain wall.
10. Place pour 7 (bridge end panels).
11. Place pour 8 (Type "F" concrete bridge rails). Pour 8 shall be poured after pour 6 has reached design strength, but no earlier than 7 days after pour 6 is complete.
12. Finish concrete.

SCALE WARNING
If scale bar doesn't measure one inch then drawing is not to scale

	DATE	REVISION	BY
1	11-05-10	changed note	EL

ACCOMPANIED BY DWGS. See sheet 1 for this structure

DRAFTER: E. Leon
DESIGNER: Robert Kaspari
CHECKER: Steve Garlick
REVIEWER: R. Grubbs
RENEWS:

STRUCTURAL REGISTERED PROFESSIONAL ENGINEER 12560 OREGON JULY 13, 1984 ROBERT V. KASPARI

OREGON DEPARTMENT OF TRANSPORTATION
BRIDGE ENGINEERING HEADQUARTERS
355 Capitol St NE, Rm 301
Salem, OR 97301-3871
(503) 986-4200

STRUCTURE NO. 20861
DATE August - 2010
CALC. BOOK 5743

CALAPOOYA CREEK, HWY 231
OR138W: DODGE CR/CALAPOOYA CR BRIDGE REPLACEMENTS
ELKTON-SUTHERLIN HWY 138, MP 22.10
DOUGLAS COUNTY

CONCRETE PLACEMENT AND CONSTRUCTION DETAILS

SHEET 20 OF 20
DRAWING NO. 84353

INSERT TAB

Installation Plan

CONCRETE ENTERPRISES, INC.
P.O. Box 513
Stayton, OR 97383-0513
Phone: (503) 769-8502
Fax: (503) 769-4931

SUBMITTAL

NO: 00009
DATE: 03/14/11
PAGE: 1 of 1

DESC 1: Drilled Shaft Submital
DESC 2: Paving Submittal
JOB: OR138W: Dodge Cr/Calapooya Cr (#201062)
Elkton Sutherlin Hwy MP 20.74
to MP 22.22
Sutherlin, OR

OPENED: 03/14/11
21 DAYS: 04/04/11
CLOSED:
C.O. #: N/A
TRACK #: N/A

PRIORITY: Normal
STATUS: Open

SENT TO:

Oregon Dept. of Transportation
3500 NW Stewart Parkway
Roseburg, OR 97470
Ted Paselk

ITEM #	DESCRIPTION	PRIORITY	STATUS
00001	Drilled Shaft Submittal	Normal	Open
00002	Paving Submittal	Normal	Open

NOTES: Including paving QC

RECEIVED
Office of Project Manager
Crew 3830

MAR 15 2011

PM ☐ APM ☐ CASL ☐ CS ☐ INS ☐ CC ☐
☐ ACTION REQUIRED
By: _____

Inland Foundation Specialties
A Division of Inland Crane Inc
PO Box 5313
Boise, ID 83705
Phone: 208.367.1699
Fax: 208.343.8534
Oregon CCB# 114951
www.inlandfoundationspecialties.com

Transmittal # 1027-1

PROJECT: OR138: Dodge Cr / Calapooya Cr **DATE:** 3/11/2011

TO: Bjorn Miller **REF:** Drilled Shaft Submittal

WE ARE SENDING:	SUBMITTED FOR:	ACTION TAKEN:
☐ Shop Drawings	X Approval	☐ Approved as Submitted
☐ Letter	☐ Your Use	☐ Approved as Noted
☐ Prints	☐ As Requested	☐ Returned After Loan
☐ Change Order	☐ Review and Comment	☐ Resubmit
☐ Plans		☐ Submit
X Submittal	**SENT VIA:**	☐ Returned
☐ Specifications	X Attached	☐ Returned for Corrections
☐ Other:	☐ Separate Cover Via:	☐ Bids Due:

DESCRIPTION:

Bjorn,

Attached is the drilled shaft submittal. We will be submitting the drilled shaft concrete mix design as an amendment. Let me know if you have any questions.

Thanks,

Tyler Haener

Inland Foundation Specialties
A Division of Inland Crane Inc
PO Box 5313
Boise, ID 83705
Phone: 208.367.1699
Fax: 208.343.8534
Oregon CCB# 114951
www.inlandfoundationspecialties.com

Section 00512 – Drilled Shafts

Specialty Contractor – Inland Foundation Specialties

Project – OR138W: Dodge Cr/Calapooya Cr Bridge Replacements
Oregon Department of Transportation

Location – Calapooya Creek Bridge – OR138

General Contractor – Concrete Enterprises

Submittals:

00512.30 Personnel Qualifications

- Project Reference List (See Appendix A)

- On-Site Supervisor (See Appendix B)

  On-site supervisors, one or more of the following Keith House, Levi Goins, Terry Lehto, Brent Reindel or Dustin Crea.

  Keith House has over 40 years construction experience with 8 years of drilled shaft construction experience. Keith has drilled shafts ranging from 18" diameter to 120" diameter and depths up to 125'.

  Levi Goins has over 9 years experience as a drill rig operator and drilled shaft construction supervisor. Levi has drilled shafts ranging from 2' diameter to 10' diameter and depths exceeding 100'. Levi has experience in placing rebar cages and concrete on almost all of the drilled shaft jobs he has performed.

  Terry Lehto has over 8 years experience as a drill rig operator and drilled shaft construction supervisor. Terry has drilled shafts ranging from 2' diameter to 8' diameter and depths exceeding 80'. Terry has experience in placing rebar cages and concrete on almost all of the drilled shaft jobs he has performed.

Dustin Crea has over 7 years experience as a drill rig operator and drilled shaft construction supervisor. Dustin has drilled shafts ranging from 2' diameter to 8' diameter and depths exceeding 80'. Additionally he has experience in placing rebar cases and concrete on the jobs he has performed.

- Drill Rig Operators (See Appendix B)

  Keith House has over 40 years construction experience with 10 years of drilled shaft construction experience. Keith has drilled shafts ranging from 2' diameter to 10' diameter and depths exceeding 125'. Keith has experience in placing rebar cages and concrete on almost all of the drilled shaft jobs he has performed.

  Levi Goins has over 9 years experience as a drill rig operator and drilled shaft construction supervisor. Levi has drilled shafts ranging from 2' diameter to 10' diameter and depths exceeding 100'. Levi has experience in placing rebar cages and concrete on almost all of the drilled shaft jobs he has performed.

  Terry Lehto has over 8 years experience as a drill rig operator and drilled shaft construction supervisor. Terry has drilled shafts ranging from 2' diameter to 8' diameter and depths exceeding 80'. Terry has experience in placing rebar cages and concrete on almost all of the drilled shaft jobs he has performed.

  Brent Reindel has over 5 years drilled shaft experience and 2 years experience as a drill rig operator. Brent has drilled shafts ranging from 2' diameter to 8' diameter and depths exceeding 80'. Brent has experience in placing rebar cages and concrete on almost all of the drilled shaft jobs he has performed.

  Dustin Crea has over 7 years experience as a drill rig operator and drilled shaft construction supervisor. Dustin has drilled shafts ranging from 2' diameter to 8' diameter and depths exceeding 80'. Dustin has experience in placing rebar cages and concrete on almost all of the drilled shaft jobs he has performed.

00512.40 Submittals

(a) Drilled Shaft Installation Plan

- <u>Drilled Shaft Sequence</u>:

IFS would install the Bent 2 drilled shaft after access to the shaft has been constructed. The shaft will be constructed during the in-water work period.

- Equipment Suitability: (See Appendix C)

  IFS proposes to use a Casagrande B180 or B250 hydraulic track mounted drill rig, or similar sized machine. The drill will have adequate torque and down pressure to drill through the gravel, silt, sand, and mudstone as indicated in the boring logs. A variety of drill tooling may be implemented including the following: dirt augers, rock augers, coring barrels, cleaning buckets and flat pans. A service truck with a torch, welder and variety of tools will also be on the jobsite. A crane and vibratory hammer will also be on the jobsite.

- Shaft Excavation Methods:

  Shaft excavation will be performed by conventional rotary methods. Various tools such as augers, core barrels and cleanout buckets will be used to drill the soil and rock. The final cleanout will be performed by using a flat pan or cleanout bucket to remove loose material from the bottom of the shaft. IFS may choose to use an air lift method to clean the bottom of the shaft. If voids are present between the permanent casing and the surrounding soil, drill spoils, leancrete or concrete will be placed to fill the voids. Water displaced by concrete during the shaft pour will be pumped off the top of the shaft to a containment area provided by the others. Drilled shaft spoils disposal will be handled by others.

- Shaft Stability:

  The permanent casing will be used for shaft stability for concrete placement. IFS will use temporary casing and/or slurry to ensure shaft stability in loose materials as necessary. Due to the high rock elevation, it is not anticipated that slurry will be needed for this project.

- Drilling Slurry: (See Appendix D for Slurry Data)

  IFS does not anticipate the need for slurry drilling on this project. However, if needed, IFS is able to perform slurry drilling. If slurry is needed, IFS will us water or Slurry Pro CDP, synthetic polymer slurry.

- Slurry QC Plan: (See Appendix D for Slurry Data)

  IFS does not anticipate the need for slurry drilling on this project. If slurry is needed, the properties and tests will be used as recommended by the slurry

manufacturer. Technical assistance will be provided by John Tuttle 661-212-1223. All of the drill operators submitted above have been trained by the synthetic slurry manufacturer in the proper use of synthetic slurry.

- Reinforcing Steel:

  The supply and assembly of the rebar cage with the CSL tubes is by others. The assembled rebar cage will be picked with the use of a crane or the drill rig. Once the cage is vertical, internal supports would be removed. Centralizers will be used to align the cage in the center of the shaft, centralizers are by others. The cage will be supported by chains and binders from the permanent or temporary casing. IFS would propose, as an option, setting the rebar cage on feet. These feet would consist of a carbon steel pipe of adequate size to slip over a vertical bar. This pipe would have a metal pad on one end and a piece of rebar material would be installed inside this pipe to provide the proper clearance for the rebar cage above the shaft bottom. This foot assembly would be secured to the cage with tie wire.

- Material Conformance:

  The permanent casing will be new domestic steel meeting the requirements of ASTM A36. The certifications will be submitted when the casing is delivered to the site.

  The drilled shaft concrete mix design will be submitted at a later date as an amendment to this submittal.

- Concrete Placement:

  If the shaft is dry, IFS will free-fall the concrete without the use of a tremie as allowed by the specifications. If the shaft is wet, IFS will truck chute or pump the concrete to the hopper of the 10" steel tremie pipe. The bottom of the tremie pipe will be placed approximately 12" from the bottom of the shaft. Concrete will be poured from the bottom of the shaft to the top of the construction joint. If the head pressure from the concrete causes the tremie to backup, IFS will slowly raise the tremie pipe until the concrete will flow through the tremie pipe. The tremie pipe will not be removed from the concrete that is poured and will always have at least 5 ft. of penetration into the fresh concrete. If there is water in the shaft, IFS will use a seal (pig) in the tremie pipe to prevent water mixing and segregation during the initial charge with the first load of concrete. During under water placement, IFS will pump water off the top of the fresh placed concrete to prevent overflowing. IFS will pump to a containment area provided by others. Grout placement in the crosshole sonic logging test access tubes will be by others.

- Permanent and Temporary Casing Installation and Removal:

  Temporary casing shoring may be installed for stream isolation and containment. The casing shoring would be between 9' diameter and 12' diameter by approximately 14' in length. The casing shoring would be driven using the drill or a vibratory hammer down to approximately elevation 364.40 or when a seal is established.

  The permanent casing will be between 8'6" diameter and 8' diameter by approximately 7' 8" in length. The permanent casing will be installed by the crane, vibratory hammer or drill.

- CSL Testing:

  CSL testing will be performed by others.

- Confinement Methods:

  Confinement methods will be handled by others. Casing shoring may be used to isolate drilling activities from the stream. Drilling fluids will be pumped thru continuous hose/piping to a containment area provided by others. Disposal of these materials are by others. Spoils will be deposited adjacent to the drill rig and contained by others.

- Protecting Existing Structures:

  Permanent casing will be installed in the upper portions of the shaft providing shaft stability. Existing structures will be visually monitored for negative impacts due to drilling operations. If existing structures are negatively impacted by drilling operations, operations will be stopped until a resolution is reached.

Appendix A

Project Reference List

JOB Name	CUSTOMER	Owner	Scope of work	Completed
Locus Grove/McMillian	H&H Utility Contractors Eric Boswell 225 W. Franklin Rd. Meridian, ID 83642 208-888-6876	Idaho Power Company PO Box 70 Boise, ID 83707 208-388-2741	This project consisted of drilling, setting anchor bolt pattern and pouring of concrete for a 7' diameter shaft, 20' deep. Soil conditions included sands, clays and cobbles with a water table level at approximately 22' below grade. Concrete pour was completed with the use of a tremie pipe.	Feb 2011
BSU Field Goal Net Polls	Alpine Construction, Inc. PO 190025 Boise, ID 83719 (208) 602-9426	Boise State University	36" Diameter drilled shaft, crane to set the pole.	Oct 2010
Pacific Recycling	PCM Co. LTD, 12485 W. View Ridge Drive Boise, ID 83709 Matt Brown (208) 869-7555	Pacific Recycling Center	Install 51 mm micropile by 40' Foot Lengths.	Oct 2010
BSU Parking Garage	Thyssen Krupp Randy 8564 W. Elisa St. Boise, ID 83709 208- 658-0000	Boise State University	Furnish & place 24" permanent casing.	Oct 2010
36th Ave Pedestrian Bridge	Guho Corp. 391 W. State Street, Suite G, Eagle, Idaho 83616 208-939-8850	Idaho Department of Transportation	Furnish & drive H-pile, install pipe tips, crane service to set pre-engineered metal bridge.	Jan 2011
I-84 Franklin Blvd. to 11th Ave., Nampa ID	Concrete Placing Company 6451 W. Gowen Rd. Boise, ID 83709 208-362-2100	Idaho Department of Transportation	783'Ln. Ft. bridge pre-drill, piling in soil, install CMP sleeves.	Nov 2010
Clearwire Tower, Nampa Airport	Idaho Tower Constructors 9380 Chaparral Ranch Rd. Nampa, ID 83686 Rusty Wallace (208) 461-8003	Clearwire	60" diameter drilled shaft.	July 2010
Sorrento Lactalis, Inc. PO Box 1280 Nampa, Idaho 83653 (208) 467-4424	Stahlman Group, Inc. 5 Chenell Drive, Box 3 Concord, NH 03301 Janet Halasinski 603-225-0010 Ext. 3806	Sorrento Lactalis, Inc.	Installed 25 microplies to support a new slab foundation for a cheese factory whey tank. The micropile was installed through silt clay and embedded into dense gravel with cobbles. Embedded plates were installed and the microplies poured into the slab. 3 piles were tested at 75 kips.	Jun 2010
OR202 Nehalem River Banzer Bridge #30140A	Carter & Company Inc. 4676 Commercial St SE #203 Salem OR 97302 503-371-4582	Oregon Department of Transportation	38" diameter drilled shaft excavation, 72" diameter drilled shaft.	Oct 2010

OR82 Grande Ronde RR	D.L. Edmonson 71441 Summerville Rd. Summerville, OR 97876 (541) 534-6795	Oregon Department of Transportation	The scope of this project included the installation of 4 each drilled shafts with shaft lengths of 80 -83 ft. This project site was very limited for access with the existing roadway remaining in service and bounded with the river, power lines and the railroad. This project was completed with the use of an oscillator to advance and extract the temporary casing and conventional rotary drilling inside the temporary casing for soils excavation. Permanent CMP casings at the top of these shafts were installed to allow the installation of the bridge columns. Soil conditions varied from sand, silt, cobbles, boulders and high plasticity clays. Water table varied between 6-12' below grade requiring all concrete to be placed with a tremie pipe system.	Jan 2011
SH21 Wildlife Collision Avoidance	McAlvain Construction, Inc. 5559 W Gowen Rd Boise, ID 83709 208-362-2125		Furnish & drive 450 ft. steel H-pile (14 X 89), temporary shoring.	Aug 2010
Valleywide Fertilizer, Hansen ID	Gary D. Jones Construction 247 W. Highway 30 Burley, ID 83318	Valleywide Fertilizer Distribution	425' 54" drilled shaft.	April 2010
OR 35 Mt. Hood Highway	JAL Construction PO Box 6269 Bend, OR 97708 (541) 389-1236	Oregon Department of Transportation	This project consisted of installing 34ea 4ft diameter secondary shafts with 36 ea. 4' diameter primary shafts to form secant pile walls. Rotary drilling inside oscillator casing was used for shaft installation which ranged in depth from 19 to 42 ft.	Sep 2010
11th Ave. Overpass, Nampa ID	McAlvain Construction, Inc. 5559 W Gowen Rd Boise, ID 83709 208-362-2125	Idaho Department of Transportation	Test Pile, Furnish & Drive Steel H-Pile 14X117, 78 ft. rock sockets	July 2010
VA Hospital	Cugach Government Services PO Box 985 Boise, ID 83701 Shirley Galecki 208-546-7154	CGSI-VA Boise 500 W. Fort Street Boise, ID 83702	Installed 26 micropiles at Boise Veteran's Hospital 14-35' in depth. Micropiles were used to support existing and future concrete foundations. A verification test pile was tested to 124 kips.	May 2010
Twin Falls/Burley TWF Washington Street Foundations	Idaho Power Company PO Box 70 Boise, ID 83707 208-388-2741	Idaho Power Daron Beesley, Owner Representative 208-338-6178	Work consisted of installed four drilled pier foundations for the relocation of Power Lines along Washington Street from Caswell to Poleline Road and Wirshing Ave. to Poleline Rd. on the West Side. These shafts were six foot diameter shafts averaging 16.5 feet deep into four to six foot rock socket, consisting of placing rebar and bolt anchors and filling with structural concrete.	Mar 2010
Garrity Blvd Bridge IC	Concrete Placing Company Tom Ferguson 6451 W. Gowen Rd. Boise, ID 83709 208-362-2100	Idaho Department of Transportation	Preboring, 30" diameter temporary casing.	Jan 2011

Bishop Rd Bridge	Kiggins Concrete Construction 3610 Hwy 30 W Pocatello, ID 83201 208-233-9165	Idaho Department of Transportation	Furnish & drive 12" diameter steel sheet pile.	May 2010
Siuslaw/Custin Creek Bridges	Oregon State Bridge Craig Gries PO Box 310 Stayton, OR 97383 (503) 767-6722	Oregon Department of Transportation	This project consisted of installing 1 each 8 ft. diameter shaft, approximately 20 ft. long. The site conditions required the installation of a temporary casing at the top of shaft for shaft stabilization. Also included was 1 each 5 ft. diameter shaft of approximate 12 ft. of rock socket. Both shafts were poured wet with the use of a tremie pipe.	July 2010
Birds of Prey	Perkins Construction, Inc. 2039 East Feldspar Court Boise, ID 83712 208-367-1630	The Peregrine Fund World Center Birds of Prey 5668 W. Flying Hawk Boise, ID 83709 Jack Cafferty 208-362-3716	Installed 8 micropiles, 20' long, to be used as anchors for Birds of Prey aviary structure and netting enclosure. Micropiles were installed through stand and gravel with test loads up to 128 kips.	Nov 2009
FAA Structure	Record Steel & Construction Inc. 1854 E Lanark Street Meridian, Idaho 83642 208-887-1401	Federal Aviation Administration	This project involved the drilling and pouring of 9 each shafts. Shafts were 4' diameter and 5' diametrer and varied in depth from 25' to 58'. Tow of these shafts were immediately adjacent to a main irrigation canal and the design on these 2 shafts resulted in permanent CMP at the tops of the shaft and the installation of second rebar cage extending approximately 4' into the shaft pour. The soil conditions varied from soils, sand, clay and cobbles. The water table varied and all concrete was placed with the use of a tremie pipe.	May 2010
Little Salmon River Bridge – US 95 Turnbay	Westway Construction, Inc. PO Box 519 Airway Heights, WA 99001 Jason West 509-468-8535	US Dept. Of Transportation	Installed 2,625' of 16" diameter drilled in steel pile foundation for a bridge across the Little Salmon River located in Riggins, Idaho. 40 piles were installed to depths of 85' to 95'. The piles consisted of full length 16" diameter X .500 wall casing drilled with concrete and top reinforcing. The pile was installed through dense sand and gravel with cobble and boulders and socketed into rock. Each pile had a 6' rock socket in Schist.	July 2010
I-5 Elkhead Road, Knowles Creek	Slayden Construction Group Inc. Roger Silbernigel PO Box 247 Stayton, OR 97383 503-769-1969	Oregon Department of Transportation	This project consisted of the installation of 3 each 5 ft. diameter shafts covering 3 separate phases of construction. The shafts ranged in depth from 18 to 21 ft. with a minimum of a 10 ft. long rock sockets. Soil conditions and water levels varied resulting in a combination of wet and dry pours for the concrete and all shafts required the installation of permanent CMP's to allow columns to be completed.	Jun 2010

US395 Bundle 414 McKay Creek Silvies Slough	Wildish Standard Paving Co Josh Smith PO Box 7428 Eugene OR 97401 541-485-1700	Oregon Department of Transportation	This project consisted of the installation of 10 each 5 ft. diameter drilled shafts, ranging in depth from 18 to 54 ft. All shafts required 5 ft. diameter rock sockets and temporary casing from the top of rock to above grade. Temporary casing of 5-1/2 ft. diameter was used to allow for the drilling of the 5 ft. diameter rock sockets which had minimum design lengths of 10 ft. Soil conditions varied from sand and silts, cobble, boulders and solid rock formations and all shafts were poured wet with the use of the tremie pipe.	Aug 2010
US20/26 U-xing Nyssa	Landis & Landis PO Box 50 Marylhurst, OR 94036 503-466-9043	Oregon Department of Transportation	28 anchors, 16 - 28' for retainment of bridge walls for railroad bridge underpass.	Sept 2009
US 2 Lowering	Graham Construction & Management Inc. David Linke 331 N. Fancher Road Spokane, Washington 99212 509-534-1030	Washington Department of Transportation	The project consisted of permanent shoring wall, 930' in length with 410 permanent anchors, triple corrosion protected. H-Piles were drilled in and set with anchors being installed through the trumpets of prepared pile. Test of anchors varied from 78 kips to 150 kips. Anchor lengths 35' to 50'. This project also consisted of temporary shoring wall, 300' in length, 60' high. The H-piles were placed by partial drilling of holes and driving the remainder of lengths. Piles were 70' with trumpets pre-placed in the piles, consisting of 9 rows of anchors with a design for a combination of soil nails and rock anchors. Temporary anchors were installed through the trumpets consisting of a Titan hollow core bar. Anchor lengths 35 to 60'.	Nov 2010
Evaro Montana	Graham Construction & Management Inc. David Linke 331 N. Fancher Road Spokane, Washington 99212 509-534-1030		This project consisted of installing 10 ea. 220mm drilled shafts and 4 ea. 440mm drilled shafts. The220mm shafts were 39 to 40' deep and were installed using auger drilling and a vibratory hammer for casing installation and extraction. The 440 mm shafts were 78' long with the tops of shafts ranging from 10 to 16' below existing grade. Installation was done with an oscillator and rotary drilling inside the full length casing.	June 2010
Weiser Waste Water Treatment Plant	Clearwater Operations, Inc. PO Box 1208 Eagle, Idaho 83616 208-919-1121		Shoring wall of H-pile with wood lagging and steel lagging combination for the construction of a concrete valve fault, designed to hold the present building housing the motors from caving into the vault. Used air hammer to drive the H-Pile in place.	Nov 2008
I-5 Grand Mound to Maytown	Scarsella Bros Inc. PO Box 68697 Seattle, WA 98168-0697 253-872-7173		This project consisted of installing 4, 6 & 8' diameter drilled shafts ranging in depth from 35 to 80 ft. An oscillator was used on a 6' shaft, 78' deep that could not be completed with the use of a vibratory hammer.	Aug 2010
East Park Center Bridge	McAlvain Construction, Inc. 5559 W Gowen Rd Boise, ID 83709 208-362-2125	State of Idaho	Driving HP 12X74 for three different bridges which includes the dynamic testing of the piles. Also set pre-cast concrete arch for bicycle tunnel.	Oct 2008

BYU Idaho, Rexburg ID	Oakland Construction 1978 S West Temple Salt Lake City UT 84115	Brigham Young University	This project covered the installation of 27 each 36" diameter drilled shafts. Soil conditions varied from sand and clay, boulders, lava formations and rock stratas. Shaft depths varied from 15 to 18 ft. Inland's scope of work included only the drilled for these shafts.	Apr 2008
Fort Hill, Willamina OR	Key Constructors, Inc. 18781 Kuhlman Rd. Bend, OR 97701 541-388-0916	Oregon Department of Transportation	Drilled shafts 72" diameter.	Sept 2008
I-84 Burnt River, Dixie Creek	Cascade Bridge 14215 NW 3rd Court Vancouver, WA 360-737-6576 Shad Huber	Oregon Department of Transportation	A total of eight 6' diameter and three 4' diameter shafts were installed on this project. 8' diameter temporary casing was installed through silt and gravel. Rock sockets up to a minimum of 30' were installed through basalt, limestone, slate, and dolomite on this project.	Aug 2009
Barber Dam	McAlvain Construction, Inc. 5559 W Gowen Rd Boise, ID 83709 208-362-2125	Fulcrum, Inc.	Placement of temporary bridge to access the site, installed a sheet pile wall to stop the lead of the spillway gate. Placement of 2-1/2" solid bare anchor. Multiple corrosion protection, approximately 55' into a 12' rock socket with a test of 400 kips or 200 tons loading.	Jun 2008
Ten Mile Cr. Widening	McAlvain Construction, Inc. 5559 W Gowen Rd Boise, ID 83709 208-362-2125		Temporary shoring, H-Pile and steel lagging, 16' by 18' long walls.	Mar 2008
Elk to Hardscrabble Creek	Slayden Construction Group Inc. PO Box 247 Stayton, OR 97383 503-769-1969	Oregon Department of Transportation	This project consisted of preboring 24" diameter shafts for shoring to construct a new bridge. Prebore 5 holes through rock for a total of 70'. Set pile and poured shafts.	Feb 2008
Garden City ID.-T Mobil	Broken Arrow Communication 8316 Corona Loop NE Albuquerque, New Mexico 87113 801-936-1020 Chad Taylor	T-Mobile	The project included one (18.5 Ln. Ft.) 54" diameter drilled shaft.	Nov 2007
Hwy Traffic Signals- Oregon	Holm II P.O. Box 453 Stayton, Oregon 97383 503-769-2649 Craig Gries	Oregon Department of Transportation	The project included four 36" diameter and five 42" diameter drilled shafts. Work included IFS to furnish, place, and form the concrete.	Mar 2008
Fry Rachette Bridge	David Durham. Payette, ID 208-405-9078 David Durham	David Durham. Payette, ID 208-405-9078 David Durham	Furnishing and driving pile to two abutments of a bridge.	Dec 2007

OR-38 Elk Hardscrabble	CP Construction 225 Driver Valley Road Oakland, OR 97462 541-459-3959 Todd Carson	Oregon Department of Transportation, Design Build	The project included 41 Ln. Ft. of 96" diameter drilled shafts.	Apr 2008
Deer Flat Dam-Caldwell, Idaho	RSCI 1854 E. Lanark Meridian, ID 83642 208-887-1401 Dean Bake	Bureau of Reclamation	The Temporary shoring system was driven PZ-27 sheet pile use to retain water. The sheets were 35' and stretched over 474 linear feet.	Dec 2008
Tamarack-Donnelly, Idaho	Kessler Construction, Inc. 13801 Stewart Court McCall, ID 83638 208-941-9081	Tamarack	The permanent shoring system was driven H-pile with wood lagging.	Feb 2008
Myra Road Extension, Walla Walla, WA	Apollo, Inc. 1133 West Columbia Drive Kennewick, WA 99336 509-586-11074 Amy Jenne	Walla Walla County	This project consists of driving and furnishing 26 PP 18 X .5.	Nov 2008
London Road Bridges-Lane County OR	CP Construction 225 Driver Valley Road Oakland, OR 97462 541-459-3959 Todd Carson	Lane County Public Works Department	The project included 80 Ln. Ft. of 48" diameter and 20 Ln. Ft. of 72" diameter drilled shafts. The work included furnishing, placing, and testing concrete.	Mar 2008
Brewster Lift Station-Rupert, Idaho	Huffbuhr Excavation Co, Inc. 205 W. Hwy 30 Burley, ID 83318 208-678-0821 Pat Murphy	City of Rupert	This project consists of drilling 4 dewatering wells 36" in diameter.	Sept 2007
I-5 Creek & County Central Point OR	Shasta Construction, Inc. PO Box 491539 Redding, CA 96049 503-365-5465 Steve Moseman	Oregon Department of Transportation	The project included 567 Ln. Ft. of 60" diameter drilled shafts. The work included furnishing and placing concrete.	July 2008
I-5 Whiteaker Ave.-Oregon	Capital Concrete Construction, Inc. PO Box 1309 Aumsville, OR 97325 503-749-4045 Mike Garcia	Oregon Department of Transportation	The project included 190 Ln. Ft. of 72" diameter drilled shafts, with 15 Ft in R4-R5 hardness rock. The job also included furnishing and placing concrete and CSL testing.	Dec 2007

Nagel Beverage-Nampa	Daystar Excavation, Inc. 6499 Dry Lake Road Nampa, ID 83686 208-941-1507 Lewis Dean	Nagel Beverage	The temporary shoring system was driven H-pile with steel sheet lagging. The cell was 21.5' x 21.5' by 26' deep. Due to the depth and size of the cell, IFS furnished and install a waler.	Aug 2007
Capital Bldg. Boise	McAlvain Construction 5559 W. Gowen Rd. Boise, ID 83709 208-362-2125 Rick McCoy	State of Idaho, Division of Public Works	Provide permanent and temporary shoring systems. The permanent shoring system was drilled shafts with H-pile set in concrete with wood lagging. The temporary shoring system was drilled shafts with H-pile set in concrete with steel sheet lagging.	Aug 2008
Johnson Bridge	Apollo, Inc. 1133 West Columbia Drive Kennewick, WA 99336 509-586-11074 Amy Jenne	Walla Walla County	Drilling for 48" diameter shaft included 32 Cu Yds. of soil and 7.5 Cu Yds. of Rock drilling. In addition, IFS installed 68 Ln. Ft. of temporary casing, furnish and place concrete.	Aug 2007
The Aspens-Downtown Boise	AEI 2127 Overland Rd. Suite 1 Boise, ID 83705 208-275-8901 Dan Sweig	Riverwalk LLC	The work included over 1000' of shotcrete, 28 soil nails 15' long and 28 soil nails at 25' long. There were 99 micropiles ranging from 22' to 30' deep and also 18 underpinning piles all 35' deep. The underpinning was used to support the existing stair tower for a parking garage. IFS furnished and installed a temporary shoring system of HP and steel sheet laggings. Due to the high water, IFS also drilled a dewatering well. Micropiles were tested at 192 kips.	Feb 2008
Dunnigan Creek-Idaho City Area	McLain Construction 5559 W. Gowen Rd. Boise, ID 83709 208-362-2125 Jeremy Walkup	Idaho Department of Transportation	This project consists of Drilling (169 L.M) of 36" diameter pre-bored shafts and drive (175 L.M) of H-pile	Oct 2007
OR 58 Logging Road	Holm II P.O. Box 453 Stayton, Oregon 97383 503-769-2649 Denny Holm	Oregon Department of Transportation	This project consists of Drilling (240 L.F) of 60" diameter shafts, 24' being in R4-R5 Hardness Rock, and (80 L.F) of 48" diameter shafts.	May 2009
Worley to Setters	Graham Construction P.O. Box 11954 Spokane, WA 99211 509-534-1030 Scott Bernhard	Idaho Department of Transportation	This project consists of pre-boring, pile driving and shoring. The pre-boring consisted of drilling 645 M through overburden and rock. Casings were driven through the overburden to the top of rock. The inside was drilled out using a down hole hammer and advanced into rock. The pile driving consisted of 1572 M of H-pile. Piles were driven through the overburden as well as through the prepared holes. A permanent retaining wall was constructed of soldier pile and wood lagging. The soldier pile were installed in 30" diameter holes with a minimum of a 5'rock sockets.	July 2008

Diamond Creek-Oregon	Holm II P.O. Box 453 Stayton, Oregon 97383 503-769-2649 Denny Holm	Douglas County Public Works Department	This project consists of Drilling (50 L.F) of 36" diameter drilled shafts. Furnished and placed all concrete, also supplied four CSL test.	July 2007
Block 4-Ketchum, Idaho	Kearns, McGinnis, & Vandenberg, Inc. P.O. Box 3233 Ketchum, Idaho 83340 208-726-4843 Erin McGinnis	Kearns, McGinnis, & Vandenberg, Inc. P.O. Box 3233 Ketchum, Idaho 83340 208-726-4843 Erin McGinnis	The permanent shoring system was Drilled shafts with H-pile set in concrete with concrete lagging. There was over 4000 sq. ft. of shoring wall.	Aug 2007
Rupert WWTP Upgrades	Contractor's Northwest, Inc. P.O. Box 6300 Coeur d'Alene, Idaho 83816 208-667-2456 Dave Tye	City of Rupert	This project consists of Drilling 25 (20 L.F) of 36" diameter drilled shafts.	Apr 2007
Snake River Crossing-Ontario, OR	Holm II P.O. Box 453 Stayton, Oregon 97383 503-769-2649 Denny Holm	Oregon Department of Transportation	This project consists of driving and furnishing 36 PP 16 X .5.	April 2007
Micron	Thyssen Krupp Elevators 1840 Milestone Dr. Suite B Salt Lake, Utah 84104 208-658-0540 Josh Jensen	Micron Tech. Inc.	This project consists of Drilling (26 L.F) of 36" diameter drilled shafts	Mar 2007
Crescent Rim Condo-Boise	CRB, LLC 1940 S. Bonito Way Suite 150 Meridian, Idaho 83642 208-323-0777 Leonard Butler	Crescent Rim Development	This project consists of drilling (173 Ln. Ft.) of 36" diameter drilled shaft.	Mar 2008
Nampa - Exit 38	Cache Valley Electric 2345 S John Henry Drive Salt Lake City, UT 84119 801-973-0600 Dave Woodmansee	Cache Valley Electric 2345 S John Henry Drive Salt Lake City, UT 84119 801-973-0600 Dave Woodmansee	This project consists of Drilling of a 60" diameter and a 72" diameter shafts. Also furnishing, placing, and testing the concrete. Furnishing and place rebar bar cage and bolt patterns.	Mar 2007
John Day OR Kimberly Bridge	James W. Fowler Co. 12775 Westview Drive Dallas, Oregon 97338 503-623-5373 Matt Fisher	Oregon Department of Transportation, Ontario	This project consists of Drilling (83 L.F) of 90" diameter drilled shafts. Also furnishing and placing all the concrete. Furnishing and place 43 Ln. Ft. of Permanent Casing.	Oct 2007

Sprague, Oregon	Holm II P.O. Box 453 Stayton, Oregon 97383 503-769-2649 Denny Holm	Klamath County Public Works Department	This project consists of Drilling (198 L.F) of 84" diameter drilled shafts. Also furnishing and placing all the concrete.	Aug 2008
Yamhill, Oregon	Concrete Enterprises P.O. Box 513 Stayton, Oregon 97383 503-769-8502 Jon Miller	Yamhill County, Department of Public works	This project consists of Drilling (172 L.F) of 84" diameter drilled shafts. Also furnishing and placing all the concrete.	Aug 2007
US97 Re-route Redmond, OR	Coral Construction Company P.O. Box 347 Wilsonville, Oregon 97070 503-682-2252	Oregon Department of Transportation	Drilled shafts 1220 to 1600 mm.	Nov 2007
I-205 LRT Extension Portland, OR	South Corridor Constructors 9000 SE Fuller Road Portland, OR 97086 503-777-1495 Chip Hauser	Tri County Metro Transportation District of Oregon	This project consisted of drilling (326 L.F), (85.5 L.F) 96" diameter, (128.6 L.F) 102" diameter, and (184.2 L.F) 108" diameter .In addition, IFS furnished and placed over 200 Ln. Ft. of permanent transition casing and all the drilled shaft concrete.	Jun 2007
Eckert Pathway Extension-Amity	Paul Construction P.O. Box 1117 Meridian, Idaho 83680 208-466-2953 Rick Fox	Idaho Department of Transportation	This project consists of driving and furnishing (201 L.F) HP 12 X 53. Also furnishing and install pile tips.	Apr 2007
Barber Dam, Boise	CHI Mountain States Operations 2283 Wright Ave. Suite D Twin Falls, Idaho 83301 208-734-0551		Placing approximately 80+ CY of Riprap at toe of dam for 60 Ln. Ft..	Dec 2006
State Street, Boise	Canyon Outdoor Media 6354 N. Park Meadow Way #207 Boise, Idaho 83713 816-525-3338		Drilling.	Dec 2006
Advantage Plus ,Pocatello, ID	DeWall Construction 8999 N. DeWall Lane Pocatello, ID 83206-2085 208-232-6086		Shoring System, 5,252 ft.	Mar 2007
Emmett, Idaho, South Traffic Bridge	Industrial Builders 1551 NW 9th Street Ontario, Oregon 97914 541-889-1964 Dave Erlebach	Industrial Builders 1551 NW 9th Street Ontario, Oregon 97914 541-889-1964 Dave Erlebach	Drive H-Piles for South Traffic Bridge.	Jan 2007

Bridge Repair, Crouch ID	Lloyd Kalblinger Poke Flat Ranch 545 Middle Fork Rd. Crouch, ID 83622	Lloyd Kalblinger Poke Flat Ranch 545 Middle Fork Rd. Crouch, ID 83622	Drive Temporary pile to hold until bridge could be replaced. Welded cross beams under for additional support. Used sheet pile to create wing walls.	Jan 2007
Nampa, Idaho	Cache Valley Electric Co. P.O. Box 405 Logan, Utah 84626-0405 435-752-6405 Dave WoodMansee	Advantage Plus	This project consists of drilling 48" diameter shaft to a depth at 21'. In this shaft concrete and rebar was furnished and placed. Also the anchor bolts and pattern were placed.	Dec 2006
Maple Grove, Boise, ID	Randell Concrete 7033 W. Diamond St. Boise, Idaho 83709 208-362-4024 Randell Hodgkinson	Ada County Highway Dept.	This project consists of drilling 24" diameter shaft to a depth at 60'. This shaft has been cased full depth.	Jan 2007
Savage Rapid Dam, Grants Pass, OR	Slayden Construction Group PO Box 247 Stayton, OR 97833 503-769-1969 Erik Helms	Slayden Construction Group PO Box 247 Stayton, OR 97833 503-769-1969 Erik Helms	This project consists of drilling (2) 36" diameter shaft to a depth at 52', drilling (2) 60" diameter shaft to a depth at 16', and drilling 24" diameter shaft to a depth at 120' this shaft has been cased full depth	May 2008
Rogue River, Oregon	Carter & Company Inc. 4676 Commercial St SE #203 Salem OR 97302 503-371-4582	Carter & Company Inc. 4676 Commercial St SE #203 Salem OR 97302 503-371-4582	This project consists of drilling 24" diameter shaft to a depth at 60'. This shaft has been cased full depth.	Jun 2007
Nampa, Idaho	Idaho Electric Signs 6528 Supply Way Boise, Idaho 83716 208-338-9401 Rick Berry	Idaho Electric Signs 6528 Supply Way Boise, Idaho 83716 208-338-9401 Rick Berry	This project consists of drilling (2) 36" diameter shafts to a depth at 12'.	Oct 2006
Pocatello, Idaho	Schindler Elevator Corporation 743 McGregor Court Boise, Idaho 83705-5225 208-577-5537 Pete Skow	Advantage Plus	This project consists of drilling 24" diameter shaft to a depth at 60'. This shaft has been cased full depth.	Oct 2006
Antelope Creek Bridge, Mackay	Continental Steel 419 D Street Idaho Falls, Idaho 83402 208-542-2848 Tim Jackson	Salmon-Challis National Forest, Butte County, ID	This project consists of driving eight 12 x 24 pile 60' lengths for bridge abutments.	Dec 2006
Cartwrigth Rd. Boise, Idaho	Cardinal Utility Construction 10260 W. Rhett St. Boise, Idaho 83709	Idaho Power Company PO Box 70 Boise, ID 83707 208-388-2741	This project consists of drilling four 5' diameter shafts 12' deep and one 6' diameter shaft 40' deep. Each shaft required a rebar cage, anchor bolts and a formed cap.	Aug 2006

New Plymouth, Idaho	Irminger Construction 3473 N. Brookside Lane Boise, Idaho 83714 208-939-1031	Lower Payette Ditch Co.	This project consisted of driving 3200 square feet of temporary sheet pile across the Payette River to divert water and allow construction of a dam.	Jan 2007
Scott Henry Bridge Replacement	Holm II P.O. Box 453 Stayton, Oregon 97383 503-769-2649 Denny Holm	Douglas County, Oregon Douglas County Public Works Department	This project consisted of drilled shafts 60" diameter; 16 – 30 foot depths. Pre-bored 9 shafts 24' deep each.	Jan 2007
Main Feeder Ashland OR	R & G Excavation 39300 Montgomery Drive Scio, OR 97374 503-394-2190 Tim Boedigheomer	City of Ashland Oregon	This project consisted of drilling 24" diameter shafts through overburden with frequent boulders. Each pile required a minimum of a 5' rock socket. A total of 22 shafts were drilled on this project using a down-hole hammer.	Oct 2006
Nehalem River Ridge at Timber Rd.	Cascade Bridge LLC 14215 NW 3rd Court Vancouver, Washington 98658 Dave Mingo Rick Phillips	Washington County, Oregon	This project included drilling and casing 36" diameter shafts at two bridge locations. Each bridge required approximately 65' of drilling.	Aug 2006
Nestucca River (Sorensen) Bridge	Holm II, Inc. P.O. Box 453 Stayton, OR 97383 Denny Holm 503-769-2649	Tillamook County, Oregon Tillamook County Public Works Department	This project required drilling two 48" diameter shafts for a total of 54' at one abutment. The center pier called for an 84" diameter shaft drilled to a depth of 29'.	Jul 2007
US-12 Attalia WA	Apollo Inc. 1133 W. Columbia Drive Kennewick, WA 99336 Amy Jenne 509-586-1104	US-12 Attalia State of Washington	This project consisted of four 8' diameter shafts drilled to approximately 45' depths. The shafts were drilled in loose sandy conditions that required driving an 8' 6" diameter casing full depth and excavating the inside of the shafts.	Oct 2006
Nampa, ID (Simplot Plant)	Inland Foundation Specialties	A.H. Lundbery Associates, Bellevue, WA	Drive an HP 10 x 57 Pile to refusal, approximately 28' lengths (4).	Sept 2006
Tamarack, Idaho	Inland Foundation Specialties	Tamarack Resort LLC 960 Broadway Suite 100 Boise, Idaho 83706 208-472-1750	Drive 15 H-Pile for foundation support structure. Average pile depth of 15' Welded beams between pile for foundation framework.	Jul 2006
Temporary Shoring	Sawtooth Construction Inc. Preston T. Ziegler 208-726-8070	Rocky Mountain Hardware City of Haley	This project consisted of drilling 30" diameter holes to place and concrete in temporary H-Pile for a shoring wall. Steel sheet lagging was installed as the site was excavated. This project took place near the Hailey Airport.	Dec 2006

Betts Bridge Replacement	Five Rivers Construction Inc. 1331 Baltimore Street Longview, Washington 98632	Washington Department of Transportation Clark County	This project consisted of driving 54" diameter temporary, permanent casing and excavation down 50'. There were 8 shafts, four at each abutment on this project.	Dec 2006
Calapooia River Bridge	Holm II Inc. PO Box 453 Stayton OR 97383 503-769-2649	City of Lebanon Linn County, Oregon	This project consisted of drilling a 6' diameter shaft 70' deep with an outer casing diameter of 7'. The shaft was drilled through river rock, sand and clays.	Aug 2006
BNSF Railway Pre-Boring	Newton Construction Paha, Washington Ron Berry 509-536-2485	BNSF Railroad Mark Newton 509-370-2189	This project consisted of pre-boring shafts through a live railroad track. The shafts were permanently cased through rock fill. Each shaft was socketed into rock with a compressive strength of 30,000 psi.	July 2006
Drilled Shafts Lebanon, OR	Concrete Enterprises Inc. Rick Miller PO Box 513 Stayton, OR 97383 503-769-8502	City of Lebanon South Santiam River Bridge	This project consisted of a total of 310' of 36" diameter shafts at the abutments. The center pier originally was designed for 2 shafts 72" diameter, 65' deep. These shafts were extended to 85' depth, and an additional 100' shaft was added. The center pier shafts had 8' diameter casing shoring and 6'6" diameter temporary casing.	Sept 2006
Pole Foundations, Nampa, ID	Power Plus 25 Hartman Boise, Idaho 83704 Mark 208-323-1506	Power Plus 208-323-1506	This project consisted of drilling four 48" diameter shafts for signal foundations. Each shaft is approximately 10' deep.	July 2006
Drilled Shaft Franklin & Linder	Wasatch Electric 1574 SW Temple Salt Lake City, UT 84115 801-487-4511	Wasatch Electric 1574 SW Temple Salt Lake City, UT 84115 801-487-4511	This project consisted of a drilled shaft 21' deep, 48" diameter for a transmission pole. The shaft was cased full depth.	Apr 2006
72" Drilled Shafts/Tie Back Wall	Weaver Construction LaGrande, Oregon Jim Weaver 541-963-5226	Oregon Department of Transportation, Hermiston, OR 541-567-1423	This project consists of two 72" diameter shafts. Each shaft is cased to bedrock, with a 15' rock socket into R4 – R5 rock. A drilled and set pile shoring wall with wood lagging and tieback anchors is also included on this job. The shoring wall is approximately 1800 square feet.	Feb 2007
Dewatering Wells, Sun Valley ID	Bishop Builders PO Box 1746 Ketchum, Idaho 83340 Jim Bishop 208-726-9717	Tim Flaherty 165 Golden Eagle Dr. Halley, ID 83333	This project consisted of drilling four 36" diameter dewatering wells 18' deep. Perforated CMP was installed full depth.	May 2006
Donnelly, ID (Tamarack)	Masco Inc. 5450 W. Gowen Road Boise, Idaho 83709 208-362-6152	Tamarack Resort LLC 960 Broadway Suite 100 Boise, Idaho 83706 208-472-1750	Excavation	Feb 2006

I-5 Seven Oaks Interchange	Ross Brothers & Co., Inc. Medford, Oregon 503-393-5885 Terrance Hill 503-841-7614	City of Medford	This project consisted of drilling a total of 8 shafts on two bridges. The shafts are approximately 45' deep and 7' diameter. 8' diameter temporary casing was installed to facilitate drilling a 7' diameter rock socket.	Sept 2008
Newport Bridge Replacement	Holm II, Inc. P.O. Box 453 Stayton, Oregon 97383 503-769-2649	City of Bend, Oregon	This project included drilling 36" and 42" diameter shafts as well as pre-boring for H-Pile. There was over 105 Ln. Ft. of 36" diameter shafts and 130 Ln. Ft. of 42" diameter shafts.	Aug 2006
Karcher Interchange	Central Paving Co P.O. Box 15010 Boise, Idaho 83715 208-338-0818	Idaho Transportation Department P.O. Box 7129 Boise, Idaho 83707	This project consisted of pre-boring for H-Piles. The holes were 24" diameter and cased. These pre-bores were also socketed into rock.	Mar 2006
U.S.-12 5th Street	Five Rivers Construction, Inc. 1331 Baltimore Street Longview, Washington 98632 Connie Wika 360-423-1991	State of Idaho	This project consisted of driving 28 piles for 2 bridge abutments and 1 pier. This project also included shoring one abutment.	Jun 2006
I-5 Clarks Branch to Tunner Millrace Design Build, Lewiston Visitor Center	Holm II Inc. PO Box 453 Stayton OR 97383 503-769-2649	ODOT Technical Representative CH@M Hill, Danielle Pompe 541-378-0662	Drill and installed 4 each 7' diameter shafts ranging in length from 30' deep to 49' deep. Soil conditions included sandy gravel over burden and then the commonly found sandstone in the Oregon Coast areas. Rock sockets were achieved and successful completion was done on time with no rejections of shafts.	Aug 2006
Elkhorn Village, Sun Valley	Okland Construction 208-622-8459 Billy Hill 801-303-8322	Elkhorn Village	This project consisted of 1,025' of temporary steel H-Pile and steel sheet lagging.	May 2007
I-5 Clarks Banch to Tunnel	Mowat Construction 15701 SE 135th Ave. Clackamas, Oregon 97015 503-650-5389	Douglas County, OR Oregon Department of Transportation	This project consisted of two 7' diameter shafts drilled 20' into hard rock. These shafts were drilled through casing shoring and poured up to grade.	Nov 2006
Cole Rd Bridge	Concrete Placing Inc. 6451 W. Gowen Road Boise, Idaho 83709 208-362-2100	Ada County Highway District 318 East 37th Street Garden City, Idaho 83714	This project consisted of pre-boring 30" diameter holes for shell pile. A total of 280 feet were drilled. These pre-bores were cased through the overburden and socketed into rock.	Jan 2006
Billboard Foundation Drilling	Outdoor Design P.O. Box 879 Middleton, Idaho 83644 208-585-3984 Shawn	Outdoor Design P.O. Box 879 Middleton, Idaho 83644 208-585-3984 Shawn	This project consisted of 3 drilled shafts 4' diameter.	Dec 2005

Tamarack Resort/Donnelly, ID	Petra Construction 90560 W. Black Eagle Drive Boise, Idaho 83709 208-323-4500 Gene	Tamarack Resort LLC 960 Broadway Suite 100 Donnelly, Idaho 208-472-1750 Bob Gridley	This project consisted of installing and removing 9,800 square feet of temporary shoring walls. The walls were constructed by driving H-Pile and installing tie-back anchors and wood lagging.	Jun 2007
Tamarack Golden Bar-Donnelly	Scott Hedrick Construction 1154 North Orchard Boise, Idaho 208-345-5800 Tim Barrett	Tamarack Resort LLC 960 Broadway Suite 100 Donnelly, Idaho 208-472-1750 Bob Gridley 208-271-6229	Installed driven H-Pile and pressure treated wood lagging permanent shoring wall.	Aug 2006
I-84-Boise, Idaho near Mac Trucks	Lamar Outdoor Advertising 2250 S. Empire Way Boise, Idaho 83709 208-362-0039 Darin	Lamar Outdoor Advertising 2250 S. Empire Way Boise, Idaho 83709 208-362-0039 Darin	This project consisted of drilling two 4' diameter shafts 17' deep each, for sign structures	Oct 2005
Spencer Bridge	Wildish Standard Paving P.O. Box 7428 Eugene, Oregon 97401 Josh Smith 541-884-0035	Oregon Department of Transportation	This project consisted of drilling a total of 75' of 6' diameter shafts. 382 total feet of 2' diameter shafts were also drilled and cased on this project. Each shaft was socketed into rock.	Feb 2006
Beaver Creek Bridge	Carter & Company Inc. 4676 Commercial St SE #203 Salem OR 97302 503-371-4582	Oregon Department of Transportation	This project consisted of drilling a total of 116' of 36" diameter shafts on 2 bridges. 42" diameter permanent casing was installed to the top of rock.	Feb 2006
Drilled Shaft NE 184th & Sandy, Troutdale OR	Cascade Bridge 14215 NW 3rd Ct. Vancouver, Washington 98658 360-737-6576 Rick or Dave Mingo	Union Pacific Railroad	This project consisted of drilling four 42" diameter shafts 40' deep near the railroad.	Nov 2005
Perm Shoring Wall, Tamarack Resort	Tamarack Resort LLC 960 Broadway Suite 100 Donnelly, Idaho 208-472-1750 Bob Gridley	Tamarack Resort LLC 960 Broadway Suite 100 Donnelly, Idaho 208-472-1750 Bob Gridley	Installed 2,400 square feet of permanent H-Pile and pressure treated wood lagging.	Dec 2005
Elkhorn Springs County Store	Engelmann, Inc. P.O. Box 6240 Ketchum, Idaho 83340 208-726-9742 Bob Smith	CG Elkhorn Hotel LLC	This project consisted of driving 196 (10 x 42) pile. Each pile had a driving shoe and pile cap welded on.	Feb 2006

Eckert Road, Boise, Idaho	Idaho Power Company PO Box 70 Boise, ID 83707 208-388-2741	Idaho Power Company Chuck Pardue P.O. Box 70 (83707) Boise, ID 83702 208-388-2741	This project consisted of 2 ea 6' diameter drilled shafts. Shaft depths were 21 and 26 feet. Each shaft included anchor bolts, patterns, rebar cage and formed cap.	Jan 2006
McAndrews Road Bridge, Bear Creek	Ross Brothers Salem, OR Scott Andrews 503-881-2738	City of Medford, Ken Karanosh	Drill & install 8 each drilled shafts 40' in depth. The shafts consisted of 7' diameter permanent casing in the top 10' of the shaft, seated in rock. The remainder of the drilled shaft was 5' in diameter. The drilling conditions after the 7' diameter permanent casing consisted of highly fractured & weathered rock.	Jul 2007
Kings Corner Overpass, Nampa, ID	Layton Construction 9090 S. Sandy Parkway Sandy, Utah 84070 801-568-9090 Dan Thackeray	City of Nampa	This project consisted of driving 6,800 total feet of HP 12 x 24 and H-Pile 14 x 117 Pile. 44 strand rock anchors were also drilled and installed. The anchors were pull tested and locked off to capacity.	May 2006
Country Road Project, Valley Chapel Road Bridge	Robert Goebel P.O. Box 3086 Spokane, Washington 99220 Steve Goebel 509-535-8877	Spokane County	This project consisted of drilling two 8' diameter shafts. These shafts were drilled using telescoping casing. The outside casing was a 9' diameter permanent casing, the inside was an 8' diameter casing. The shafts were approximately 65' deep.	Mar 2006
Maple Grove Ext. Boise, ID	Idaho Sand & Gravel 924 Sugar Street Nampa, Idaho 83653 208-466-5001	Ada County Highway District 318 East 37th Street Garden City, Idaho 83714	This project consisted of 2300 square feet of shotcrete and soil nails. The wall was built in very loose sandy soil conditions.	May 2006
Sage Rd, Perm Shoring, Sun Valley	Ed Fenwick P.O. Box 828 Ketchum, Idaho 83340 208-726-4829	Ed Fenwick P.O. Box 828 Ketchum, Idaho 83340 208-726-4829	This project originally called for 12,000 square feet of permanent shoring. Due to rock formations discovered during construction, the sq. ft.age was cut in haLn. Ft.. The shoring installed consisted of drilled and cast in place H-Pile. Precast concrete panels were installed for lagging. Tieback anchors were also installed and tested.	Jan 2006
Idaho Bank Building, Ketchum, ID	Wilson Construction 251 Northwood Way 208-726-9776 Branden Crego 208-720-3977	Idaho Independent Bank	This project consisted of driving H-Pile at close spacing for soil retention. The work was performed under power lines.	Aug 2005
Jack Shaft Drill/SunValley, ID	Thyssen Krupp Randy 8564 W. Elisa St. Boise, ID 83709 208- 658-0000	Power Engineers Building	This shaft was drilled and cased to a depth of 36'. The shaft diameter was 24".	Aug 2005

Eagle Ballantyne Shafts	H & H Utility Contractors 200 E. Broadway Ave. Meridian, Idaho 83642 208-888-6876 Jordan	Idaho Power P.O. Box 70 Boise, Idaho 83707	This project consisted of drilling transmission pole foundations, two @ 6' diameter approximately 22' deep and one @ 5' diameter 16' deep. All shafts were formed 1' above grade.	Sep 2005
Tamarack Resort/Donnelly, ID	Jacobsen Construction P.O. Box 27608 Salt Lake City, Utah 84127 801-973-0500 Dee	Tamarack Resort LLC 960 Broadway Suite 100 Boise, Idaho 83706 208-472-1750	This project consisted of the installation of 900 square feet of temporary shoring. The shoring consisted of Drive H-Pile and steel lagging. A vibratory hammer/extractor was used to remove the pile and lagging.	Oct 2005
Newsome Bridge/Post, OR	Wildish Standard Paving Co Steve Brown PO Box 7428 Eugene OR 97401 541-485-1700	Oregon Dept of Forest	Drilled and installed two each 5' diameter drilled shafts 30 feet in depth. Permanent shaft casing was used in the top ten feet of each shaft. Soil conditions encountered were most hard packed pit run with oversized boulders up to 2' in diameter. The project was quickly completed and approved with no objections.	Aug 2005
Ustick Dry Creek 138kVLine	Idaho Power Company PO Box 70 Boise, ID 83707 208-388-2741	Idaho Power Company Chuck Pardue Doug Dockter P.O. Box 70 Boise, ID 83707 208-388-2741	This project consisted of drilling a 6' diameter shaft 20' deep below high voltage lines. A rebar cage and bolt pattern were installed	Aug 2005
Coast Fork Bridge T Diam Drilled Shaft	Holm II, Inc. P.O. Box 453 Stayton, Oregon 97383 503-769-2649 Craig	Oregon Department of Transportation, Oregon State Highway Division	This project consisted of drilling a total of 139 lineal feet of 84" diameter shafts. These shafts called for permanent casing at the top 10 feet.	Nov 2005
Whitewater Pile Driving	Scott Hedrick Construction 1154 North Orchard Boise, Idaho 208-345-5800	Tamarack Resort LLC 960 Broadway Suite 100 Boise, Idaho 83706 208-472-1750	This project consisted of driving 56 each 12 x 53 pile for 7 separate bridges at the Tamarack Resort.	Jul 2005
Missoula Perm Shoring Fox Theater	Environmental Construction 101 International Way Missoula, Montana 59808 Kris Cook 406-523-1150	Fox Theater	This permanent shoring system required drilling 30" diameter holes to set and pour H-Pile in the center. Pre-cast concrete lagging and tieback anchors were installed to complete the permanent wall.	Dec 2005
T-Mobil Foundation	Liberty Electric 8415 S. 700 West #3 Sandy, Utah 84070 Jim Coles 801-979-1448	T Mobile	This project consisted of drilling a 6' diameter shaft 21' deep. The shaft was drilled through sandy material. This shaft called for a rebar cage and anchor bolt pattern, the top of shaft was formed and poured above grade.	May 2005

Tamarack Resort, Donnelly, ID Fuel Cell Extension Ret. Wall	Tamarack Resort LLC 960 Broadway Suite 100 Boise, Idaho 83706 208-472-1750	Tamarack Resort LLC 960 Broadway Suite 100 Boise, Idaho 83706 208-472-1750	This project consisted of extending 3 sides at a shoring wall by welding an additional 4' of pile to the top of the wall and adding additional wood lagging.	Jun 2005
Loves Truck Stop, Heyburn, ID	Hillis Outdoor Spec. Inc. 354 Jake Whorton Road Silver Creek, Georgia 30173 James Hillis 706-506-0489	Loves Travel Stop, Heyburn, ID	This project consisted of driving 54" casing with a vibratory hammer/extractor through sands and clays. The casing was excavated once it reached tip elevation.	May 2005
Golden Bar Townhomes, Tamarack Idaho	Scott Hedrick Construction 1154 North Orchard Street Boise, Idaho 83706 Scott Hedrick 208-345-5800	Golden Bar Townhomes at Tamarack	This project consisted of 6,400 sq. ft. of permanent shoring walls. The shoring walls were installed at the Tamarack Resort. The shoring walls consisted of Driven H-Pile and pressure treated wood lagging.	Oct 2006
Glenwood and State, Boise	TC Concrete 17455 Madison Rd. Nampa, ID 83687 (208) 466-5488	Walgreens Building, Boise, Idaho	Drilled fourteen 30" diameter shafts 8' deep for light pole foundations.	Apr 2005
Payette River Crossing	P & M Excavators 13992 Easy Street McCall, Idaho 208-634-7479 Dan Place	City of McCall, Idaho, (Hunt Property)	This project consisted of installing a 16.5' x 20.5' sheet pile shoring cell. The excavation cut elevation was down 18'.	Apr 2005
Nampa Substation Pole Foundations	Idaho Power Company Charles Pardue PO Box 70 Boise, ID 83707 208-388-2741	Idaho Power Company PO Box 70 Boise, ID 83707 208-388-2741	Drill and install two each 6' Diameter pole foundations 21.5' deep. The hole was successfully complete using a vibratory driver to install temporary casing and then excavation using a variety of augers. A rebar cage and anchor bolt assembly were placed in the shaft and then filled with concrete with the temporary casing being removed.	Mar 2005
Drilled Sign Poles, Cole & Victory Area	Canyon Outdoors Media, LLC 6354 North Park Meadow Way #207 Boise, ID 83716 208-371-0303	Canyon Outdoors Media, LLC 6354 North Park Meadow Way #207 Boise, ID 83716 208-371-0303	This project consisted of drilling a 3' diameter cased shaft 15' deep.	Mar 2005
Caldwell Rec. Baseball Field	Caldwell Parks & Recreation 618 Irving St. Caldwell, ID 83605 Vinton Howell, 455-3060	Caldwell Parks & Recreation 618 Irving St. Caldwell, ID 83605 Vinton Howell, 455-3060	Drilling and erecting 6 pre-assembled poles.	Mar 2005
Title One-Nampa	Thyssen Krupp 8564 W. Elisa St. Boise, ID 83709 208- 658-0000	Title One Building, Nampa	This project consisted of drilling a 2' diameter jackshaft 35' deep. This shaft was cased full depth with a concrete plug at the bottom.	Feb 2005

I-5 Sutherlin-Roseburg Bridges	Holm II Inc. PO Box 453 Stayton OR 97383 503-769-2649	Oregon Department of Transportation	This project consisted of drilling three 42" diameter shafts 26½ ' from a bridge deck. These shafts were socketed 8' in bed rock.	Mar 2005
Verizon Water Tank-Caldwell	Cache Valley Electric 2345 S. John Henry Drive Salt Lake City, UT 84119 801-973-0600	Verizon Wireless	The project consisted of drilling 4' diameter 23' deep shaft that included placing rebar cage and anchor bolts.	Mar 2005
Graves Creek Bridge	Ross Brothers & Co. 3501 Brooklake Road North Salem OR 97303 503-393-5885	Oregon Department of Transportation	This project consisted of pre-boring 26 holes 15' deep. The shell piles were installed with a down hole hammer, the shell piles were then driven to refusal.	Nov 2005
Mora-Cloverdale 138kV Line #438	Idaho Power Company PO Box 70 Boise, ID 83707 208-388-2741	Idaho Power, Tris Yerrington 208-388-2743	Drill and install a 7' Diameter pole foundation 28' deep. The hole was successfully complete using an open-hole method of drilling. A rebar cage and anchor bolt assembly were placed in the shaft and then filled with concrete.	Feb 2005
Arco West Project	Quality Electric 5225 Irvin Boise, ID 83706 Don Rye 208-375-1300	Arco West Drilled Foundation	This project consisted of drilling two 48" diameter shafts 18' deep for sign foundations.	Mar 2005
10th & Bannock Bank Building	Russell Corp. Boise, Idaho Marv Meyer 208-323-0777	Gary Christensen 208-323-0777	Work consisted of 12 each shafts 6' diameter ranging in depths of 27' to 35'. 4 each shafts 8' diameter ranging in depth of 41' to 47 deep. The soil conditions encountered were mostly sandy material with cobbles 18" to 24". The water table was encountered at approximately 12' in depth.	Jul 2005
Weiser Test Pile, Snake River Bridge	American GEO Tech. 5260 Chinden Blvd Boise, ID 83714 208-658-8700 Vaughn Thurgood	Idaho Department of Transportation	This project consisted of driving sheet pile 30' into mudstone and driving HP 117 Pile 65' into mudstone.	Feb 2005
Lusk Street, Boise ID	Thyssen Krupp Randy 8564 W. Elisa St. Boise, ID 83709 208- 658-0000	Title One Building, Nampa	This project consisted of driving sheet pile 30' into mudstone and driving HP 117 Pile 65' into mudstone.	Jan 2005
U.S. Spring Creek Hill, Klamath Falls	Holm II Inc. PO Box 453 Stayton OR 97383 503-769-2649	Oregon Department of Transportation	This project consisted of drilling 24, 4' diameter shafts 20' deep.	Sept 2005
NRF Dry Cell East Foundation (INEEL)	C & H Construction PO Box 50558 Idaho Falls, ID 83405 Clayne Hanson 208-529-0290	INEEL, Department of Energy, 850 Energy Drive, Idaho Falls, ID 83401-1583	This project consisted of installing 3,440 sq. ft. of shoring. The shoring was an H-Pile & wood lagging with tie-back anchors system. The project was located at the INEEL facility with strict security and vibration monitoring.	Mar 2005

Appendix B

Personnel Experience

Keith House – 40 Years Experience: On Site Supervisor/Operator/Owner

Newport Bridge – Bend, OR – Drilled Shafts
Gettings Creek – Lane County, OR – Drilled Shafts
Roberts Creek – Douglas County, OR – Drilled Shafts
Coast Fork Bridge – Eugene, OR – T' Diameter Drilled Shafts
I-5 Sutherlin-Roseburg Bridges – Douglas County, OR – Pre-Drilling
Arco West Project – Butte County, ID – Drilled Shafts
Lusk Street – Boise, ID – Jackshaft Drilling
US 97 Spring Creek Hill – Chiloquin, OR – Drilled Shaft Concrete
Spencer Bridge – Klamath County, OR – Drilled Shafts
Bear Creek – Medford, OR – Drilled Shafts
Valley Chapel Rd Bridge – Spangle, WA – Drilled Shafts
Newsome Bridge – Post, OR – Drilled Shafts
West Valley Medical Center – Caldwell, ID – Jackshaft Drilling
West Valley Medical Center – Caldwell, ID – Drilled Shafts
Bliss Rest Area – Bliss, ID – Drilled Shafts
St. Alphonsus – Boise, ID – Drilled Piers, Structural Steel
I-5 Row River – Cottage Grove, OR – Drilled Shafts
Clark Fork – E. of Clark Fork, ID – Drilled Shaft Walls
Tower Tek – Dusty, WA – Drilled Shafts
Idaho Power – Mildrose Substation – Drilled Shafts
Idaho Power – Vallivue Substation – Drilled Shafts
Idaho Power – Boulder Tap – Drilled Shafts

Levi Goins – 9 Years Experience: On Site Supervisor/Operator

Newport Bridge – Bend, OR – Drilled Shafts
Coast Fork Bridge – Eugene, OR – T' Diameter Drilled Shafts
T-Mobile Foundation – Boise, ID – Drilled Shafts
Glenwood & State – Boise, ID – Foundation Pole Drilling
Idaho Power – Nampa Substation – Drilled Shafts
Arco West Project – Butte County, ID – Drilled Shafts
10th & Bannock – Boise, ID – Drilled Shafts
US 97 Spring Creek Hill – Chiloquin, OR – Drilled Shaft Concrete
Beaver Creek Bridge – Astoria, OR – Drilled Shafts
Eagle Ballantyne – Eagle, ID – Drilled Shafts
Newsome Bridge – Post, OR – Drilled Shafts
Thyssen Krupp Elevator – Meridian, ID – Jackshaft Drilling

Levi Goins Continued:
Thyssen Krupp Elevator – Boise, ID – Jackshaft Drilling
West Valley Medical Center – Caldwell, ID – Jackshaft Drilling
West Valley Medical Center – Caldwell, ID – Drilled Shafts
Bliss Rest Area – Bliss, ID – Drilled Shafts
St. Alphonsus – Boise, ID – Drilled Piers, Structural Steel
I-5 Row River – Cottage Grove, OR – Drilled Shafts
Marriott – Boise, ID – Jackshaft Drilling
Clark Fork – E. of Clark Fork, ID – Drilled Shaft Walls
Tower Tek – Dusty, WA – Drilled Shafts
Idaho Power – Mildrose Substation – Drilled Shafts
Idaho Power – Vallivue Substation – Drilled Shafts
Idaho Power – Boulder Tap – Drilled Shafts

Terry Lehto – 21 Years Experience: On Site Supervisor/Operator

T-Mobile Foundation – Boise, ID – Drilled Shafts
Glenwood & State – Boise, ID – Foundation Pole Drilling
Idaho Power – Nampa Substation – Drilled Shafts
Title One – Nampa, ID – Jackshaft Drilling
Verizon Water Tank – Caldwell, ID – Drilled Piers
Cloverdale & Overland – Boise, ID – Drilled Shafts
10th & Bannock – Boise, ID – Drilled Shafts
US 97 Spring Creek Hill – Chiloquin, OR – Drilled Shaft Concrete
Beaver Creek Bridge – Astoria, OR – Drilled Shafts
I-84 Lamar Ad – Boise, ID – Drilled Shafts
Eagle Ballantyne – Eagle, ID – Drilled Shafts
Thyssen Krupp Elveator – Sun Valley, ID – Jackshaft Drilling
Newsome Bridge – Post, OR – Drilled Shafts
Thyssen Krupp Elevator – Meridian, ID – Jackshaft Drilling
Thyssen Krupp Elevator – Boise, ID – Jackshaft Drilling
West Valley Medical Center – Caldwell, ID – Jackshaft Drilling
St. Alphonsus – Boise, ID – Drilled Piers, Structural Steel
I-5 Row River – Cottage Grove, OR – Drilled Shafts

Brent Reindel – 5 Years Experience: 2 Years Experience as Operator

Savage Rapids Dam – Rouge Valley, OR – Drilled Shafts
I-205 Light Rail – Portland, OR – Drilled Shafts
Redmond Mainline – Redmond, OR – Drilled Shafts
Yamhill River Bridges – Yamhill, OR – Drilled Shafts
Sprauge River – Eugene, OR – Drilled Shafts
OR 58 – Eugene, OR – Drilled Shafts
I-5 Creek & County – Central Point, OR – Drilled Shafts
London Rd. – Eugene, OR – Drilled Shafts
Elk Creek to Hardscrabble – Elkton, OR – Drilled Shafts
Weaver Rd. Bundle – Ridle, OR – Drilled Shafts
Beaver Creek, Beaver, OR – Drilled Shafts

Dustin Crea – 4 Years Experience: 2 Years Experience as Operator

Savage Rapids Dam – Rouge Valley, OR – Drilled Shafts
BYU – Rexburg, ID – Drilled Shafts
Worley N. – Worley, ID – Drilled Shafts
Crescent Rim – Boise, ID – Drilled Shafts
Cell Foundation – Boise, ID – Drilled Shafts
Burley Dewatering Wells - Burley, ID – Drilled Shafts
Capital Building – Boise, ID – Drilled Shafts
Rogue River – Central Point, OR – Drilled Shafts
Underground Parking Garage – Sun valley, ID – Drilled Shafts
Sound Wall – Boise, ID – Drilled Shafts

Appendix C

Drill Rig Specifications

Technical data — *Dati tecnici*

B180HD

Borehole dimensions	***Dimensioni di scavo***		
Max. depth	*Profondità max.*	221 ft	67 m
Max. diameter	*Diametro max.*	71/87* in	1800/2200* mm
Max. diameter with oscillator	*Diametro max. con massa*	59 in	1500 mm
Undercarriage	***Carro***		
Width with retracted tracks	*Larghezza cingoli chiusi*	8.2 ft	2500 mm
Width with extended tracks	*Larghezza cingoli aperti*	12.8 ft	3900 mm
Track length	*Lunghezza cingoli*	17 ft	5190 mm
Shoes width	*Larghezza pattini*	27.5 in	700 mm
Travelling speed	*Velocità di traslazione*	0 ÷ 1 mph	0 ÷ 1,5 km/h
Swing speed	*Velocità rotazione torretta*	0 ÷ 3.2 rmp	0 ÷ 3,2 rpm
Engine	***Motore***	Cummins QSC 8.3 C	
Type	*Tipo*	Turbocharged	
Power at 2200 rpm	*Potenza a 2200 rpm*	300 HP	224 kW
Fuel tank capacity	*Capacità serbatoio gasolio*	81 US gal	307 l
Hydraulic oil tank capacity	*Capacità serbatoio olio idraulico*	153 US gal	580 l
Main winch	***Argano principale***		
Max. line pull	*Tiro max.*	44,962 lbs	200 kN
Max. line speed	*Velocità max. fune*	295 ft/min	90 m/min
Rope diameter	*Diametro fune*	1 in	26 mm
Rope capacity	*Capacità fune*	462 ft	141 m
Auxiliary winch	***Argano ausiliario***		
Max. line pull	*Tiro max.*	15,737 lbs	70 kN
Max. line speed	*Velocità max. fune*	318 ft/min	97 m/min
Rope diameter	*Diametro fune*	0.7 in	18 mm
Rope capacity	*Capacità fune*	367 ft	112 m
Rotary head	***Testa rotary***	**H 22.20**	**H 22.20**
Max. torque	*Coppia max.*	132,761 lb ft	180 kNm
Max. drilling speed	*Velocità max. lavoro*	34 rpm	34 rpm
Discharge speed	*Velocità di scarico*	120 rpm	120 rpm
Weight	***Peso***		
Weight in working condition	*Attrezzatura in condizioni di lavoro*	~133,380 lbs	~60500 Kg

* Under mast element / *Sotto mast*

All data is considered indicative and does not bind our company. All data can be changed without notice. [illegible]

General arrangement and dimensions

Composizione generale e dimensioni

B180HD

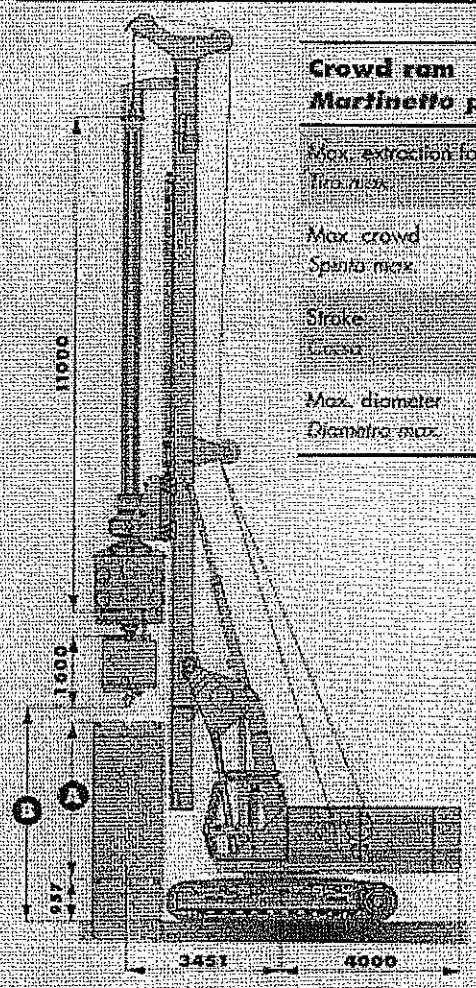

Crowd ram
Martinetto pull-down

Max. extraction force / *Tiro max.*	47,435 lbs / *211 kN*
Max. crowd / *Spinta max.*	28,100 lbs / *125 kN*
Stroke / *Corsa*	19.7 ft / *6000 mm*
Max. diameter / *Diametro max.*	71 in / *1800 mm*

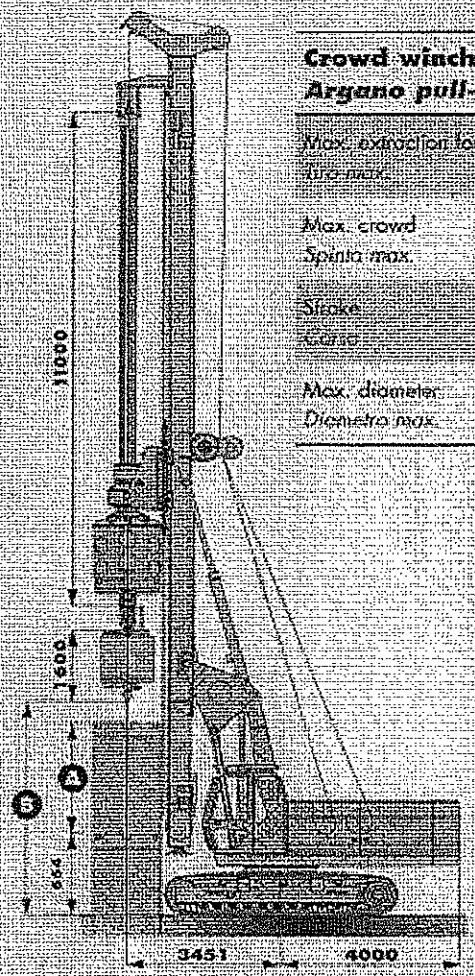

Crowd winch
Argano pull-down

Max. extraction force / *Tiro max.*	62,950 lbs / *280 kN*
Max. crowd / *Spinta max.*	62,950 lbs / *280 kN*
Stroke / *Corsa*	45 ft / *13700 mm*
Max. diameter / *Diametro max.*	59 in / *1500 mm*

Interlocking type kelly bar / ***Aste a bloccaggio***	A ft / mm	B ft / mm	**Depth / *Profondità*** ft / mm
4 x 7500	15 / 4500	18 / 5620	86 / 26280
4 x 9500	15 / 4500	18 / 5620	112 / 34280
4 x 11000	11 / 3500	16 / 4970	132 / 40280
4 x 12500	6 / 2000	11 / 3470	152 / 46280
4 x 14500		5 / 1470	178 / 54280

Friction type kelly bar / ***Aste a frizione***	A ft / mm	B ft / mm	**Depth / *Profondità*** ft / mm
5 x 7500	15 / 4500	18 / 5620	108 / 32280
5 x 9500	15 / 4500	18 / 5620	141 / 42980
5 x 11000	11 / 3500	16 / 4970	166 / 52480
5 x 12500	6 / 2000	11 / 3470	190 / 57980
5 x 14500		5 / 1470	223 / 67980

Technical data — *Dati tecnici*

B250

Borehole dimensions	***Dimensioni di scavo***		
Max. depth	*Profondità max.*	220 ft	68 m
Max. diameter	*Diametro max.*	98 in	2500 mm
Max. diameter with casing	*Diametro max. con tubo*	78.7 in	2000 mm
Undercarriage	***Carro***		
Width with retracted tracks	*Larghezza cingoli chiusi*	9.8 ft	3000 mm
Width with extended tracks	*Larghezza cingoli aperti*	14.5 ft	4400 mm
Track length	*Lunghezza cingoli*	17.4 ft	5330 mm
Shoes width	*Larghezza pattini*	35.4 in	900 mm
Travelling speed	*Velocità di traslazione*	0 ÷ 1.1 mph	0 ÷ 1,5 km/h
Swing speed	*Velocità rotazione torretta*	0 ÷ 2.8 rpm	0 ÷ 2,8 rpm
Engine	***Motore***	Deutz BF6M 1015 C	
Type	*Tipo*	Turbocharged	
Power at 2100 rpm	*Potenza a 2100 rpm*	402.3 HP	300 kW
Fuel tank capacity	*Capacità serbatoio gasolio*	132 gal	500 l
Hydraulic oil tank capacity	*Capacità serbatoio olio idraulico*	212 gal	800 l
Main winch	***Argano principale***		
Max. line pull	*Tiro max.*	44,000 lbs	193 kN
Max. line speed	*Velocità max. fune*	272 ft/min	83 m/min
Rope diameter	*Diametro fune*	1.1 in	28 mm
Rope capacity	*Capacità fune*	420 ft	128 m
Auxiliary winch	***Argano ausiliario***		
Max. line pull	*Tiro max.*	25,000 lbs	110 kW
Max. line speed	*Velocità max. fune*	193 ft/min	58,7 m/min
Rope diameter	*Diametro fune*	1 in	24 mm
Rope capacity	*Capacità fune*	705 ft	215 m
Rotary head	***Testa rotary***	H25	
Max. torque	*Coppia max.*	160,051 ft lb	217 kNm
Max. drilling speed	*Velocità max. lavoro*	33 rpm	33 rpm
Max. discharge speed	*Velocità di scarico*	125 rpm	125 rpm
Weight	***Peso***		
Weight in working condition	*Attrezzatura in condizioni di lavoro*	163,159 lbs	74000 Kg

General arrangement and dimensions

Composizioni generali e dimensioni

B250

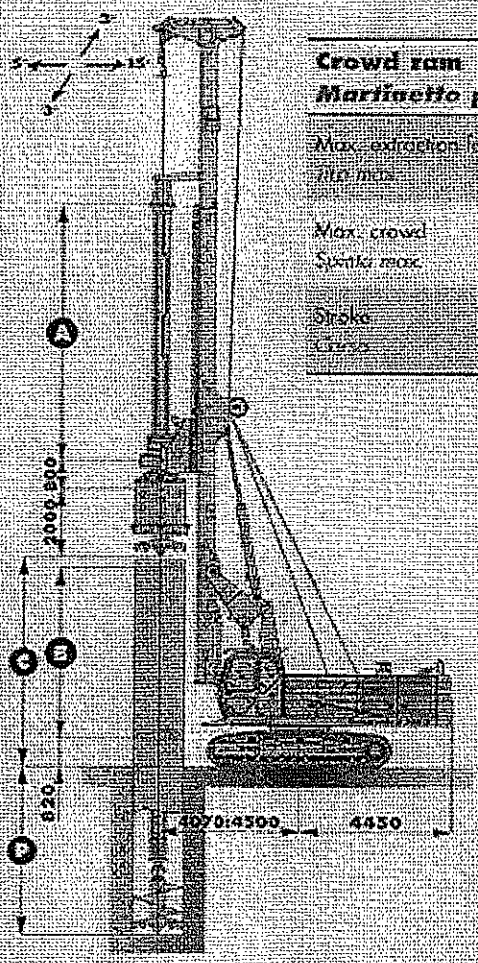

Crowd ram
Martinetto pull - down

Max. extraction force *Tiro max.*	47,000 lbs 211 kN
Max. crowd *Spinta max.*	41,000 lbs 180 kN
Stroke *Corsa*	19.7 ft 6000 mm

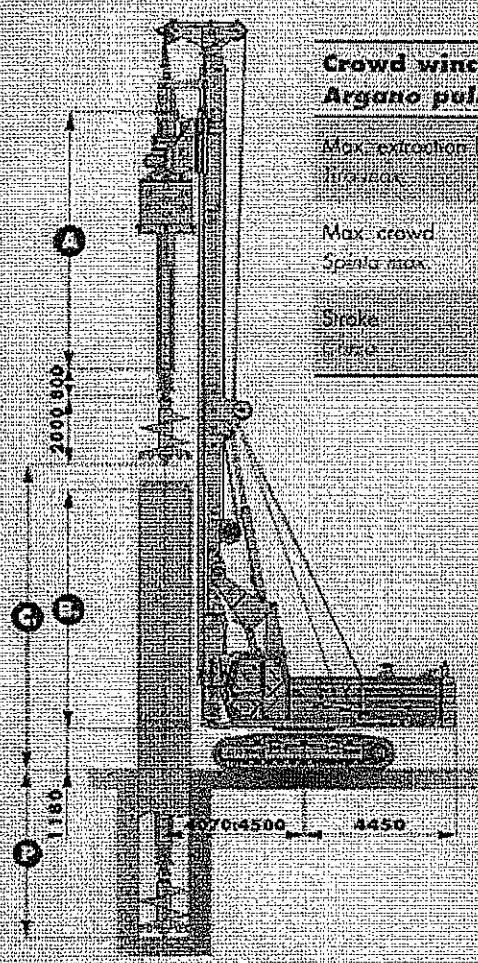

Crowd winch
Argano pull - down

Max. extraction force *Tiro max.*	54,000 lbs 240 kN
Max. crowd *Spinta max.*	54,000 lbs 240 kN
Stroke *Corsa*	47.6 ft ft 14500 mm

Friction type kelly bar ***Asta a frizione***	A ft / mm	B ft / mm	B1 ft / mm	C ft / mm	G ft / mm	P ft / mm
4 x 7500	24.6 / 7500	16.4 / 5000	23 / 7000	20.1 / 6130	29 / 8900	84 / 25700
5 x 9500	31.2 / 9500	16.4 / 5000	16.4 / 5000	20.1 / 6130	22.6 / 6900	138 / 42100
5 x 11000	36.1 / 11000	13.1 / 4000	13.1 / 4000	17.4 / 5300	17.7 / 5400	163 / 49600
5 x 12500	41 / 12500	8.2 / 2500	6.6 / 2000	12.5 / 3800	12.8 / 3900	187 / 57100
5 x 14500	47.6 / 14500			6 / 1800	6.2 / 1900	220 / 67100

Interlocking type kelly bar ***Asta a bloccaggio***	A ft / mm	B ft / mm	B1 ft / mm	C ft / mm	G ft / mm	P ft / mm
4 x 7500	24.6 / 7500	16.4 / 5000	23 / 7000	20.1 / 6130	29 / 8900	84 / 25700
4 x 9500	31.2 / 9500	16.4 / 5000	16.4 / 5000	20.1 / 6130	22.6 / 6900	110 / 33700
4 x 11000	36.1 / 11000	13.1 / 4000	13.1 / 4000	17.4 / 5300	17.7 / 5400	130 / 39700
4 x 12500	41 / 12500	8.2 / 2500	6.6 / 2000	12.5 / 3800	12.8 / 3900	150 / 45700
4 x 14500	47.6 / 14500	–	–	6 / 1800	6.2 / 1900	176 / 53700

Transport mode — *Fase di trasporto*

B250

Piling arrangement — *Versione pali*

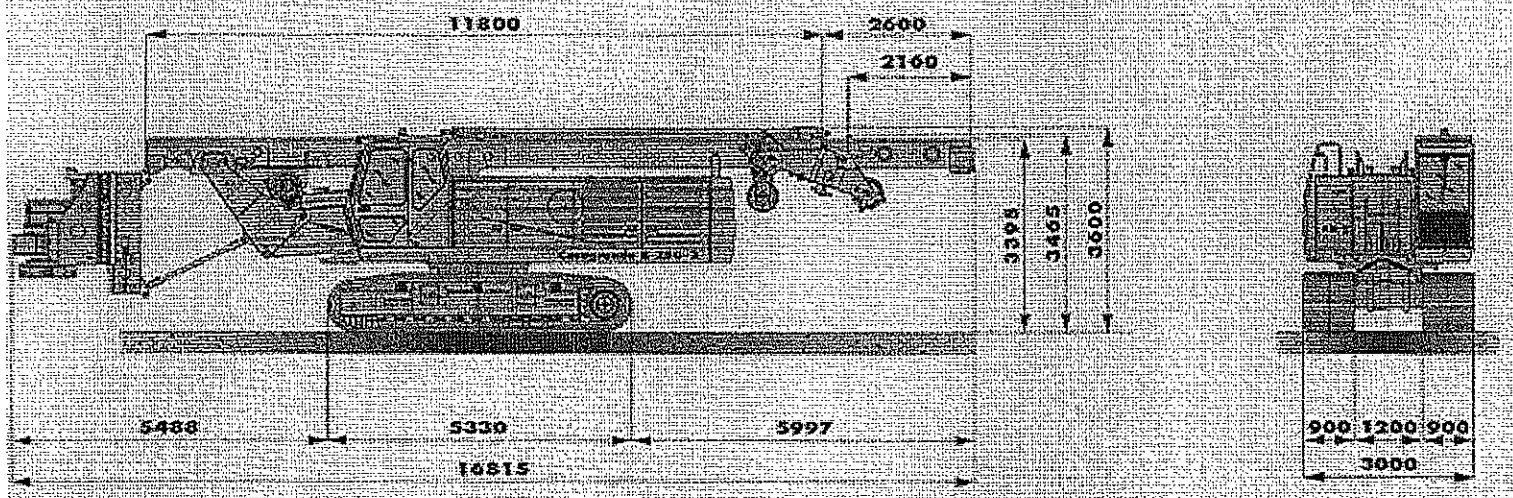

Weight of machine arranged for transportation — *Peso attrezzatura in fase di trasporto* — ~ 143,300 lbs — ~650 kN

CFA arrangement — *Versione CFA*

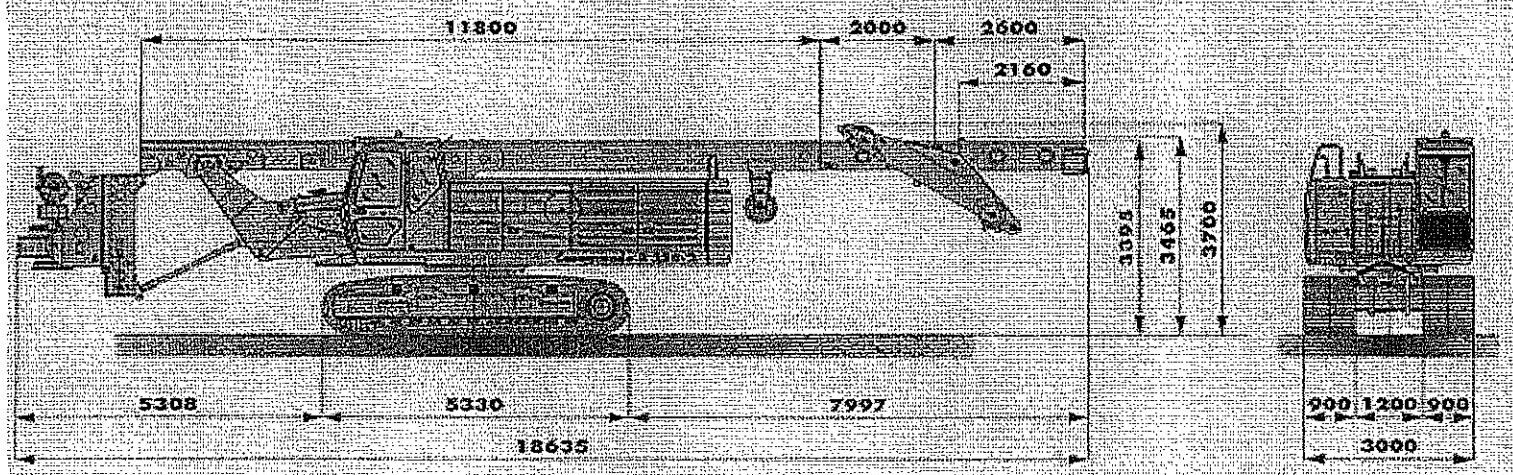

Weight of machine arranged for transportation — *Peso attrezzatura in fase di trasporto* — ~ 145,500 lbs — ~660 kN

JOB #	Size	Drill	JOB Name	CUSTOMER	Scope of work	Completed
IFS-0608	7' & 8'	B180	I-5 Seven Oaks Interchange	Ross Brothers & Co., Inc. Medford, Oregon 503-393-5885 Terrance Hill 503-841-7614	This project consisted of drilling a total of 8 shafts on two bridges. The shafts are approximately 45' deep and 7' diameter. 8' diameter temporary casing was installed to facilitate drilling a 7' diameter rock socket.	Sept 2008
IFS-0706	7.5"	B250	John Day OR Kimberly Bridge	James W. Fowler Co. 12775 Westview Drive Dallas, Oregon 97338 503-623-5373 Matt Fisher	This project consists of Drilling (83 L.F) of 90" diameter drilled shafts. Also furnishing and placing all the concrete. Furnishing and place 43 Ln. Ft. of Permanent Casing.	Oct 2007
IFS-0702	8'	B250 & B180	I-205 LRT Extension Portland, OR	South Corridor Constructors 9000 SE Fuller Road Portland, OR 97086 503-777-1495 Chip Hauser	This project consisted of drilling (326 L.F), (85.5 L.F) 96" diameter, (128.6 L.F) 102" diameter, and (184.2 L.F) 108" diameter .In addition, IFS furnished and placed over 200 Ln. Ft. of permanent transition casing and all the drilled shaft concrete.	Jun 2007
IFS-0729	8'	B250	OR-38 Elk Hardscrabble	CP Construction 225 Driver Valley Road Oakland, OR 97462 541-459-3959 Todd Carson	The project included 41 Ln. Ft. of 96" diameter drilled shafts.	Apr 2008
IFS-0819	8'	B180	I-5 Grand Mound to Maytown	Scarsella Bros Inc. PO Box 68697 Seattle, WA 98168-0697 253-872-7173	This project consisted of installing 4, 6 & 8' diameter drilled shafts ranging in depth from 35 to 80 ft. An oscillator was used on a 6' shaft, 78' deep that could not be completed with the use of a vibratory hammer.	Aug 2010
IFS-0907	8'	B180	I-5 Elkhead Road, Knowles Creek	Slayden Construction Group Inc. Roger Silbernigel PO Box 247 Stayton, OR 97383 503-769-1969	This project consisted of the installation of 3 each 5 ft. diameter shafts covering 3 separate phases of construction. The shafts ranged in depth from 18 to 21 ft. with a minimum of a 10 ft. long rock sockets. Soil conditions and water levels varied resulting in a combination of wet and dry pours for the concrete and all shafts required the installation of permanent CMP's to allow columns to be completed.	Jun 2010
IFS-1001	8'	B250	Siuslaw/Custin Creek Bridges	Oregon State Bridge Craig Gries PO Box 310 Stayton, OR 97383 (503) 767-6722	This project consisted of installing 1 each 8 ft. diameter shaft, approximately 20 ft. long. The site conditions required the installation of a temporary casing at the top of shaft for shaft stabilization. Also included was 1 each 5 ft. diameter shaft of approximate 12 ft. of rock socket. Both shafts were poured wet with the use of a tremie pipe.	July 2010

IFS-1010	8'	B250	OR82 Grande Ronde RR	D.L. Edmonson 71441 Summerville Rd. Summerville, OR 97876 (541) 534-6795	The scope of this project included the installation of 4 each drilled shafts with shaft lengths of 80 -83 ft. This project site was very limited for access with the existing roadway remaining in service and bounded with the river, power lines and the railroad. This project was completed with the use of an oscillator to advance and extract the temporary casing and conventional rotary drilling inside the temporary casing for soils excavation. Permanent CMP casings at the top of these shafts were installed to allow the installation of the bridge columns. Soil conditions varied from sand, silt, cobbles, boulders and high plasticity clays. Water table varied between 6-12' below grade requiring all concrete to be placed with a tremie pipe system.	Jan 2011
IFS-0902	8.5' & 5'	B250	Topaz Bridge, Idaho	Idaho Construction Co., Inc. 3779 N 3400 E Kimberly, Idaho 83341 208-423-4162	Installed 6' & 8.5' diameter drilled shafts at depth from 35 to 80'.	current
ICI 2130	9'	B250	Boise Airport Terminal Elevated Roadway Project	McAlvain Construction, Inc. Harry Allen 5559 W Gowen Rd Boise, ID 83709 208-362-2125	The project consisted of 2 phases; each phase included 19 drilled shafts, 38 total. The drilled shafts consisted of a 9' diameter outer casing (shoring casing) to a depth of 15'. The inner shaft was 8' diameter to a depth of 40'. Concrete was placed to 15', using a vibratory hammer the 8' diameter casing was extracted. At 15' (construction joint) the bridge column was constructed with the 9' outer casing removed once concrete was placed.	
IFS-0408	7'	B250	Row River, Cottage Grove, OR	Concrete Enterprises Inc. PO Box 513 Stayton, OR 97383 503-769-8502	Two phase work for construction of Row River Bridge in Cottage Grove, OR. Inland Foundation Specialties scope of work included 4 each 7' diameter drilled shafts about 55' deep each. The soil conditions included a very dense silty clays, gravel, and weathered bedrock. Each shaft required a 4 meter rock socket into the bedrock. Slurry drilling was anticipated but proved to not be necessary. Permanent casing (8' Diam.) was used around the construction joint to provide a water stop and water pressure plug because the construction joint was below water level. Above the permanent casing, temporary casing was used to keep out water and loose materials.	
IFS-0617	6'	B250	Calapooia River Bridge	Holm II Inc. PO Box 453 Stayton OR 97383 503-769-2649	This project consisted of drilling a 6' diameter shaft 70' deep with an outer casing diameter of 7'. The shaft was drilled through river rock, sand and clays.	Aug 2006

Appendix D

Slurry Data

KB Technologies Ltd
Standard Operating Procedures for
Bored Pile Excavation

(The information provided below is for a typical non-challenging site. Every site will require specific parameters and optimization of recommendations presented below)

I. BACKGROUND

KB Technologies, Ltd has been requested to supply its SlurryPro® CDP™ Dry-Vinyl™ Earth Stabilization System for soil stabilization on various projects. All sites present different challenges and situations that can require unique solutions. Below is a general guideline, which should be followed to help ensure successful sites.

II. SITE CONDITIONS

Unusual site conditions can arise in which case the recommendations from KB site personnel must always be followed.

III. Key Equipment and Procedures Required for Proper Use of the SlurryPro CDP System

Due to unique characteristics of the dry vinyl polymer system Slurry Pro® CDP™, several operational issues will have a major impact on the overall effectiveness of the Slurry Pro System. They are as follows:

- Augers and drilling buckets need to have a minimum of 1.5 inches clearance from the side of the casing and excavation walls on all sides. This can be achieved by decreasing the bucket or auger flight size and by adding 1.5 inches or greater, dependent on the tools diameter, over-cut tooth around the sides of the bucket or auger flights. If the 1.5 inches minimum clearance is not met, collapse of the excavated pile is highly likely due to suction or piston effects created by the excavation tools. If a drilling bucket is utilized it should be slightly tapered from the bottom of the bucket to the top to assist with suction relief. The "excavation tool" must also be **slowly** placed into the pile and **slowly** withdrawn from the pile. Quickly entering or exiting the pile could result in sudden collapse. **KB Technologies will design and sell proper digging augers upon request with appropriate notice.**
- Augers are highly preferred for drilling vs. buckets. Augers can drill faster and waste significantly less slurry than a bucket. When drilling with the auger the operator must torque down, or apply crowd, as he is slowly cutting into the earth. This process is analogous to the principals involved with opening a bottle of wine with a corkscrew. The operator should not simply spin the auger into the soil. The operator must also take care when breaking the load from the bottom of the excavation. If the auger sticks he should **slowly rotate backwards** while lifting. If the slurry column rises with the auger continue to counter rotate **slowly** until the slurry level has re-stabilized and is no longer being lifted with the auger. Once the loaded auger has been broken from the bottom of the pile the operator should slowly bring the auger to the surface while rotating slowly forward. KB Technologies will be happy to assist in the selection of a proper auger design and size as well as provide schematics for modification of this auger for optimum use under slurry.
- A minimum of 2.5 meters of head pressure must be maintained above a fresh water table at all times. Is seawater is present then the slurry specific gravity must be increased accordingly of the minimum head pressure must typically be increased a minimum of 1 meter for every 10 meters excavated.
- If the water table is greater than a few meters from the surface and the piece of casing utilized does not extend to the water table, the slurry level should be maintained at a minimum of 1 meter above the bottom of the casing unless otherwise determined on-site.

- Proper vented or slightly undersized clean-out buckets should be on site and utilized on each pile to remove any sediment or remaining loose soil from the bottom of the pile. Clean-out passes with a properly designed clean-out bucket should continue until the sand content, taken with a proper bottom hole sampler approximately three feet from the bottom of the pile, reads less than 1% entrained sand (or as specified) by the standard API Sand Content Test Method where wash water is substituted with chlorine bleach or muriatic acid. A weak solution of SlurryPro MPA, one part MPA to forty parts water be delivered to the bottom of the pile in two gallon zip lock bags with rocks placed in the bag or bags and a few small holes pocked in each bag to assist in product distribution. The clean-out bucket should then be lowered and slowly rotated to break the MPA bags. The bucket should then be slowly rotated as it is raised and lowered approximately 3 meters off the bottom of the excavation. The bucket should then be rested on the bottom of the excavation for a few minutes allowing the MPA solution adequate time to react with the fines on the bottom of the excavation. The clean-out bite should then be taken. If the fluid still does not meet the sand content specification repeat the above procedure adding more dilute MPA solution in bags. **KB Technologies will design and sell proper cleanout buckets upon request with appropriate notice.**
- A slurry overflow system should be provided for material displaced by the Kelly bar allowing for continuity of hydrostatic pressure throughout the drilling operation. KB Technologies will be happy to provide schematics for this system.
- All pumps for moving slurry should preferably be diaphragm pumps. Centrifugal pumps under four inch diameter or larger pumps with close tolerance impellers can damage the slurry lowering viscosity and thereby increasing consumption of SlurryPro CDP. Back pressure is a key element of the diaphragm pump based operation, as all lines should be controlled from the excavation hole by a valve. Closing this valve causes the line to build pressure which when adequate, from 7 to 10 bars depending on the size of the pumps utilized, causes the pump to automatically shut down. Slurry transfer lines should be 4 or 6 inch lines rated to a minimum of 10 bars. **KB Technologies will sell proper pumps and valves upon request with appropriate notice.**
- A proper mix tank and materials addition system with a product addition pan or eductor shall be used for introduction of KB products. The mix tank may be either air agitated or paddle mixed at low rpm, i.e. 40 to 80 rpm. Regardless of which mixing method is chosen it must agitate the entire area of the tank to keep polymer from accumulating on the bottom of each tank. **KB Technologies can assist with design of these facilities.**
- The project must have an adequate supply of fresh or ProTek treated water. The water must be supplied under high pressure capable of filling a large storage tank in several minutes. If a water source of this type is not available storage tanks should be dedicated to the storage of water. The water source should also be left supplying these storage tanks so they are full at all times. Should seawater or brackish water be used as the slurry make-up water a specialized water intake tank will be required. **KB Technologies can assist with design of these facilities.**
- The project must have storage facilities capable of holding one and a half times the quantity of slurry required in the field for the largest quantity of excavations open at one time.
- All product storage tanks should be either air agitated or paddle mixed at low rpm, i.e. 40 to 80 rpm. **KB Technologies can assist with design of these facilities.**
- All product sedimentation tanks should be horizontal open top tanks with sides low enough to allow occasional cleanout with a backhoe. Larger sedimentation tanks should be weird at the center point of the tank between each of the narrow sides. **KB Technologies can assist with design of these facilities.**
- All product storage tanks and sedimentation tanks should be plumbed in such a way to allow any individual tank to be isolated and independently pumped to any other storage tank, to the slurry mix tank or to the excavation.
- The recaptured slurry from the excavations being poured should be transferred back to the sedimentation tanks via hose or steel lines to ensure maximum recapture and recycle of the slurry. Open pits and canals should not be used where slurry economics are of importance.
- Each drilling rig or grab and each mix plant should have its own set of slurry testing equipment, i.e. a Marsh cup and funnel, a mud balance, pH indicator strips with a minimum of

4 color bands, sand content kit, and a proper bottom hole sampler.

- Ample quantities of all required KB products must always be on site.
- **Proper adherence to KB Technologies' recommendations and specifications shall be maintained at all times. Slurry viscosity should always be maintained in excess of 65 seconds per quart (API Marsh Funnel) or as recommended by a KB representative after further on site experience is gained. Slurry Specific Gravity should not exceed 1.035 unless WeightIt and SandSeal are being used to increase the S.G. If WeightIt and SandSeal are in use KB will specify by project the maximum S.G. to be allowed prior to concrete placement. The slurry's pH should always be maintained between 11.0 and 12.0 or as recommended by a KB representative after further on site experience is gained. Sand content should not exceed 1.0% (or as specified) prior to concreting as sampled from half a foot above the bottom of the excavation .**

IV. MIXING INSTRUCTIONS

SlurryPro® CDP™

CDP should be mixed initially at a minimum rate of 1.7 lbs/yd$_3$ (8.3 lbs/1000 gallons) of 11.0 - 12.0 pH water. This should preferably be done in the mixing tank and not at the point of excavation. Additional CDP may also be introduced at the point of excavation. The addition at the hole provides the following benefits: an abundance of gels to control fluid loss; increased viscosity to stabilize highly permeable soils; and immediate intervention in case of emergencies or other atypical situations. If the need arises to add CDP at the point of excavation, please pour CDP slowly into a stream of fluid running across the flights of the auger. Next reciprocate the auger from the top of the hole to the bottom while rotating slowly to assist in proper agitation. Avoid the agglomeration of CDP into "white gel balls" in the slurry. Feeding CDP too quickly with lack of proper agitation causes these. Any CDP in this form has been wasted. The slurry viscosity should never be allowed to drop below 65 seconds per quart regardless of what type of soil is being excavated.

ProTek® 100

ProTek 100 is used in order to enhance CDP's effectiveness. The general guidelines for adding ProTek 100 are add the product slowly in 2 to 5 gallon increments into the make-up water or recycled slurry until the pH reaches 11 to 12. Once the fluid is at a pH of 11 to 12 your make-up water or slurry is ready for addition of fresh CDP or reuse. You must continue to check the pH on a frequent basis at the excavation as this material is consumed as drilling progresses. It is best to check the pH every 10 to 14 feet of drilled progression. Additionally, the pH should be checked if the slurry appears to be thinning in viscosity or fluid loss increases within the excavation. Because ProTek 100 is a homogeneous liquid mixing can be done simply pouring it into the slurry either at the excavation or at the slurry plant. ProTek 100 is corrosive in nature so you should avoid getting this material on your skin or in your eyes.

SlurryPro LA-1™

SlurryPro LA-1 is used in order to enhance CDP's effectiveness. The general guidelines for adding SlurryPro LA-1 are add the product slowly in 5 to 10 gallon increments into recycled slurry or directly to the slurry in the excavation until the desired properties are reached. When used to assist in stabilizing a sloughing sidewall "bombs" of full strength LA-1 should be added, broken and distributed within the affected area. Immediately after the addition and distribution of LA-1 a "bomb" of dilute MPA is added, broken, and distributed in the affected area. When breaking "bombs" of LA-1 and dilute MPA the auger or bucket should be slowly counter rotated forcing the slurry out against the excavation sidewalls. When this procedure does not completely stabilize the sidewall KB's InstaFreeze System should be immediately applied.

KobbleBlok®

KobbleBlok is a specialized fluid loss additive for use in the SlurryPro System. KobbleBlok can shut off fluid loss in very porous environments, such as cobbles and boulders. It should be

incorporated into a SlurryPro System when SlurryPro MPA will not provide sufficient control of fluid migration into the sidewalls. The general guidelines for adding KobbleBlok are; add the product directly to the slurry in the excavation until the desired fluid loss control is reached.

SandSeal®
SandSeal® is a specialized fluid loss additive for use in the SlurryPro System. SandSeal does not alter the system's viscosity, as do traditional fluid loss agents such as starches, cellulosics, or bentonite. The general guidelines for adding SandSeal are; add the product slowly in 20 to 50 pound increments into recycled slurry or directly to the slurry in the excavation until the desired effect is achieved.

SlurryPro MPA™
MPA acts as a catalyst for the vinyl polymer CDP and should be used in dilute form at a ratio of approximately one to ten parts MPA to ninety-nine to ninety parts water. This dilute MPA solution should be slowly added to the stream of water or slurry entering the excavation or added in the form of a "bomb" directly to the slurry in the pile that is being excavated. "Bombs" of dilute MPA should be added whenever wall instability is noted and at the bottom of an excavation to assist with clean-out. When used to assist in stabilizing a sloughing sidewall, the dilute MPA "bomb" should be added immediately after "bombs" of full strength LA-1 are added, broken and distributed within the slurry column. When breaking "bombs" of LA-1 and dilute MPA the auger or bucket should be slowly counter rotated forcing the slurry out against the excavation sidewalls. When this procedure does not completely stabilize the sidewall KB's InstaFreeze System should be immediately applied.
Prior to and during pile completion and cleanout a weak solution of SlurryPro MPA, one to ten parts MPA to ninety-nine to ninety parts water should be delivered to the bottom of the pile in two gallon zip lock bags with rocks placed in the bag or bags and a few small holes poked in each bag to assist in product distribution. The clean-out bucket should then be lowered and slowly rotated to break the MPA bags. The bucket should then be slowly rotated as it is raised and lowered approximately 10 feet off the bottom of the excavation. The bucket should then be rested on the bottom of the excavation for a few minutes allowing the MPA solution adequate time to react with the fines on the bottom of the excavation. The clean-out bite should then be taken. If the fluid still does not meet the sand content specification, repeat the above procedure adding more dilute MPA solution in bags. Please note the *overuse* of MPA can result in dramatically decreasing the viscosity of the slurry, thereby increasing the consumption of CDP in the pile.

WeightIt®
WeightIt is a specialized densification additive for use in the SlurryPro System. WeightIt does not add solids to the system, as do traditional weighting agents such as barite and hematite. The general guidelines for adding WeightIt are; add the product slowly in 5 to 10 gallon increments into recycled slurry or directly to the slurry in the excavation until the desired specific gravity is reached.

InstaFreeze®
InstaFreeze is a specialized solidification additive for use in the SlurryPro System. InstaFreeze works in conjunction with KobbleBlok and the SlurryPro Vinyl System to create a low compressive strength polymeric grout virtually instantaneously. The effects of InstaFreeze can be controlled for solidification and grouting of the excavation walls or for spot solidification of an entire area of slurry within the excavation, or for complete solidification of the slurry in the excavation. Spot solidification can be very beneficial when obstructions are encountered or utilities are broken causing the loss of slurry. The general guidelines for adding InstaFreeze are; add the product directly to the slurry in the excavation until the desired effects are achieved.

V. KEY INDICATORS

Marsh Funnel Viscosity

The viscosity of the slurry should not fall below 60 seconds. In certain areas, such as sandy areas, a viscosity of greater than 100 may be required in extreme formations to prevent significant fluid loss and provide proper soil stabilization.

pH

The pH range for the slurry should be maintained between above11.0 and below 12.0. CDP's effectiveness may be reduced, as the pH drops below 11.0 therefore, always be conscious of the slurry's pH.

Density

The specific gravity range for the slurry should be maintained between **1.01 to 1.035** under normal operating conditions. If low hydrostatic conditions are encountered where the water table is less than 2.5 meters beneath the slurry level, the specific gravity should be increased as required using WeightIt or a combination of WeightIt and SandSeal.

Sand Content

Sand content should be checked regularly, especially prior to the placement of concrete. A sand content of .5% to 2% is appropriate for most drilled shaft operations; if sand content is over acceptable levels, make additional clean-out runs to reduce this property.

VI. SLURRY SAMPLING & RECORD KEEPING

The slurry should be checked for pH and viscosity four times in the tank farm:

- immediately after receiving the slurry back from the pile
- as fresh CDP and ProTek 100 are introduced at the mix tank
- just prior to the slurry being discharged to the storage tanks
- just prior to the slurry being discharged to the point of excavation

The pH and viscosity should also be checked at the pile:

- after every 4 meters of excavated earth, or as dictated by local regulations
- just prior to setting the cage
- prior to leaving a pile open over night or during a stoppage
- prior to resuming excavation operations following a stoppage

The slurry should be checked for specific gravity three times in the tank farm:

- immediately after receiving the slurry back from the pile
- as fresh CDP and ProTek 100 are introduced at the mix tank
- just prior to the slurry being discharged to the point of excavation

The specific gravity should also be checked at the pile:

- after every 4 meters of excavated earth, or as dictated by local regulations
- just prior to setting the cage
- prior to leaving a pile open over night or during a stoppage
- prior to resuming excavation operations following a stoppage

The sand content should be checked at the pile:

- after every 4 meters of excavated earth, or as dictated by local regulations
- just prior to setting the cage from a couple of feet off the bottom of the pile
- just prior to setting the cage from the middle of the bottom of the pile

Proper concrete records on slump and the pour should be kept at all times. Charting of the

concrete rise vs. the quantity of concrete delivered vs. time into the pour should be done for each excavation. All of this should be documented and kept in an organized manner for QA/QC purposes and to assist in trouble shooting, if the need arises.

Disclaimer

The information in this bulletin is given in good faith and is accurate to the best of our knowledge. Because we can neither anticipate nor control the different conditions under which this information and our products are used, we make no warranty of performance, expressed or implied. Typical properties given herein are not specifications. Our policy is to continually review product formulations and manufacturing to assure technical suitability and cost-effectiveness. Product characteristics are subject to change without notice. Users of our products are responsible for compliance with government regulations and patent laws.

Thank you for your continued interest in KB Technologies and for the opportunity to assist you on this project. Please call if you have any questions or require assistance or information I can be reached through our principal offices in Houston, TX at (281) 880-7505.

Sincerely,
KB Technologies, Ltd.
K. Gifford Goodhue
CEO / Partner

Material Safety Data Sheet: SlurryPro® CDP™

December 22, 2003

KB Technologies LLP
P. O. Box 680648
Houston, TX 77268-0648
Phone: (281) 880-7505, (800) 525-5237 Fax: (281) 895-0523 email: sales@kbtech.com

1. MATERIAL IDENTIFICATION

Product Name:	SlurryPro® CDP™
Chemical Family:	Vinyl polymer
CAS Reg. No.:	Proprietary
Formula:	Proprietary
Emergency Phone No.:	(1) (281) 880-7505, (800) 525-5237

2. HAZARDOUS INGREDIENTS

Material or Component	Wt %	Hazard Data
No hazardous components		NA

3. PHYSICAL DATA

Material is (at normal conditions):	Solid	
Appearance and Odor:	White granular solid. Odorless.	
pH:	NA	
Boiling Point:	NA	
Melting Point:	ND	
Specific Gravity:	1.00-1.25 (Water = 1.0)	
Vapor Pressure:	NA	(mg Hg / 20°C)
Vapor Density:	NA	(Air = 1.0)
Solubility in Water:	1%	(% by weight)
% Volatiles by Volume:	ND	(at 20°C)
Evaporation Rate:	NA	(Butyl Acetate = 1) (Ether = 1)

4. REACTIVITY DATA

Stability:	Stable
Conditions to Avoid:	NA
Incompatibility (materials to avoid):	Oxidizing agents - may cause exothermic reaction.
Hazardous Decomposition Products:	If incinerated at high temperature under controlled conditions, thermal decomposition byproducts would include low levels of carbon monoxide, carbon dioxide, various nitrous oxides.
Hazardous Polymerization:	Will not occur.

5. FIRE AND EXPLOSION DATA

Flash Point:	Not flammable
Auto Ignition Temperature:	ND
Flammable Limits in Air % by Volume:	ND
Unusual Fire and Explosion Hazards:	See decomposition products

6. HEALTH HAZARD INFORMATION

Inhalation:	Dust may irritate respiratory tract.
Ingestion:	May cause discomfort or gastrointestinal disturbance. Low oral toxicity.
Skin:	May cause irritation, especially after prolonged or repeated contact.
Eyes:	Dust contact and solution contact may cause irritation.
Permissible Concentration in Air:	None published for polymer.
Unusual Chronic Toxicity:	None known.

7. EMERGENCY AND FIRST AID PROCEDURES

Inhalation:	Remove to fresh air. Apply mouth-to-mouth artificial respiration if not breathing. Get immediate medical attention.
Skin:	Flush with plenty of soap and water for at least 15 minutes. If irritation persists, get medical attention.
Eyes:	Immediately flush with water, continuing for 15 minutes. Get medical attention.
Ingestion:	If conscious, immediately give 2 to 4 glasses of water. Get medical attention.

8. PERSONAL PROTECTIVE EQUIPMENT

Respiratory Protection:	If dusty conditions are encountered, wear NIOSH approved dust respirator.
Ventilation:	General room ventilation should be satisfactory.
Eye & Face Protection:	Safety glasses for normal handling conditions. Goggles when handling solutions. Do not wear contact lens.
Hands, Arms, & Body:	Rubber gloves and full work clothing. Add protective (rubber) clothing if splashing or repeated contact with solution is likely.

9. PRECAUTIONS & PROCEDURES

Fire Extinguishing Agents Recommended:	Foam, carbon dioxide, or dry chemical
Fire Extinguishing Agents to Avoid:	Water may cause extremely slippery conditions.
Special Fire Fighting Precautions:	Wear self-contained breathing apparatus. Solutions of product are extremely slippery.
Ventilation:	Local exhaust if dusting occurs. Natural ventilation - adequate in absence of dust.

9. PRECAUTIONS & PROCEDURES - Continued

Normal Handling:	Avoid contact with skin, eyes or clothing. Do not inhale dusts. Use normal personal hygiene and housekeeping.
Storage:	Store in a cool, dry place.
Spill or Leak (Always Wear Personal Protective Equipment):	Sweep up or shovel into metal or plastic container. Immediately cover with commercial or other available absorbent. Close and store as above. Water may be used to complete cleaning. Large spill: Dike up with same material. Mop up or pump into same container and so forth.
Special Precautions / Procedures / Label Instructions:	Product solutions are extremely slippery.

10. ENVIRONMENTAL

Degradability / Aquatic Toxicity:	In combination with UV light for 48 hours, the resulting test solutions are biodegradable in 38 days to at least 29% to <3,000 Daltons (size of mass fragments) in a certified test study. The product is rated as a low toxicity to fish, LC 50/96 hours is 357 mg/L to Brachydanio; Bioaccumulation partition coefficient (Pow)=0 ; No potential to bio accumulate.
Octanol/Water Partition Coefficient:	Not determined
Waste Disposal Methods:	Dispose as non-hazardous solid waste in compliance with state, and local regulations.
RCRA Status of Unused Material if Discharged:	Not a "Hazardous Waste".
Hazardous Waste Number:	NA
DOT Status:	Not regulated.
Reportable Quantity:	EPA 40 CFR 302 (CERCLA 102): NA
Threshold Planning Quantity:	EPA 40 CFR 355 (SERA 311-304): NA
Toxic Chemical Release Reporting:	EPA 40 CFR 372 (SERA 311-313): NA
EPA Hazard Classification Code:	Acute - No; Chronic - No; Fire - No; Pressure - No; Reactive - No

HMIS & NFPA Ratings:	**HMIS**	**NFPA**
Health	1	1
Flammability	0	0
Reactivity	1	1
Special	NA	NA

NJTSRN - KBT -0001 **Vinyl Resin Copolymer** **Water 7732-18-5**

The information and recommendations are offered for the user's consideration and examination, and it is the user's responsibility to satisfy itself that they are suitable and complete for its particular use. If buyer re-labels this product, legal counsel should be consulted to insure proper health, safety, and other necessary information is included on the container. Seller provides no warranties, either expressed or implied, and assumes no responsibility for the accuracy or completeness of the data contained herein.

GG01KD
Revision Date: 1/20/04

Dear Customer:

I am pleased to enclose environmental information on KB Internationals' flagship system, the SlurryPro® CDP™ Vinyl Earth Stabilization System.

Regarding any questions you may have concerning a SlurryPro® CDP™' Vinyl System formulation, this information is proprietary and patented. However, a SlurryPro CDP Vinyl System can be classified as a vinyl-acrylamide, which falls under the general classification of a polyacrylamide. Both the vinyl and acrylic precursors of the molecule are non-hazardous and non-toxic. SlurryPro CDP's chemical classification is listed in the U.S.A. EPA TSCA Manual under code 25085-02-3. I have included a copy of the TSCA cover, introduction and explanation sections, and page identifying CDP's structure as a non-toxic substance as defined by the U.S.A. Environmental Protection Agency. I have also included sections from the U.S.A. Federal Register Title 21 for use of chemical compositions covering CDP's chemical structure in Sugar Refining, manufacture of paper for food contact, and as food additives. All sections as well as the cover of The Federal Register are included in this mailing.

To further elaborate on the environmental safety of the SlurryPro CDP Vinyl System, I refer to the sections in the Caltrans Submittal Book dealing with toxicity and environmental issues. In the section titled "Guidelines for Product Disposal in California", By: Robert L. Judd, Jr. President of CAL-TECH Management Associates, evidence is presented to Caltrans citing California Environmental Legislation on various materials which clearly defines SlurryPro CDP as well as polyacrylamides as non-hazardous and non-toxic. It even cites that California has legislation allowing for direct discharge of these materials to the environment. CAL-TECH Management Associates is a leading California environmental consulting firm retained by KB to assist with all California and U.S. regulatory and environmental issues.

Please find included a letter of confirmation from Caltrans citing KB's environmental and toxicological package on SlurryPro CDP has been accepted. This acceptance is found under Section 7 of Caltrans response to KB Technologies. This acceptance allows KB and its customers to dispose of SlurryPro CDP as cited in The Caltrans Submittal Book.

The section entitled "Aquatic Bioassay Data on SlurryPro® CDP™", By: Thomas Mikel of Aquatic Bioassay Consulting Labs, Inc. also clearly demonstrates under U.S.A. Environmental Protection Agency protocol that CDP is a non-toxic material. Aquatic Bioassay Consulting Labs is an EPA approved testing center. All work conducted at Aquatic Bioassay Consulting Labs must meet stringent EPA guidelines. The test cited in the Caltrans Submittal Book is the primary EPA toxicity screening test. If a material shows

The above information is provided to in this document is for your and your Companies' sole use. Reproduction or distribution of this document without prior written authorization from KB International LLC is strictly forbidden.

no toxic effects to the fathead minnows it is defined as non-toxic and no further testing on toxicity is required by EPA.

SlurryPro CDP can be rapidly degraded and precipitated from solution by treating the slurry with either KleanBreak™, calcium hypochlorite or sodium hypochlorite (household bleach). All the above materials attack the functional groups on SlurryPro CDP collapsing the molecule and rendering it insoluble. These reactions are time and pH dependent. The lower the pH the more rapid the degradation. The optimum pH for these reactions is 5 - 6. At room temperature and at the optimum pH range decomposition typically occurs within 10 to 25 minutes depending on the use of KleanBreak or the type of hypochlorite used, sodium or calcium. KleanBreak has the fastest and most environmentally safe degradation reaction with SlurryPro CDP. Calcium hypochlorite is significantly faster at reacting with SlurryPro CDP than sodium hypochlorite. The primary reaction routes are illustrated below:

<u>Sodium Hypochlorite:</u>

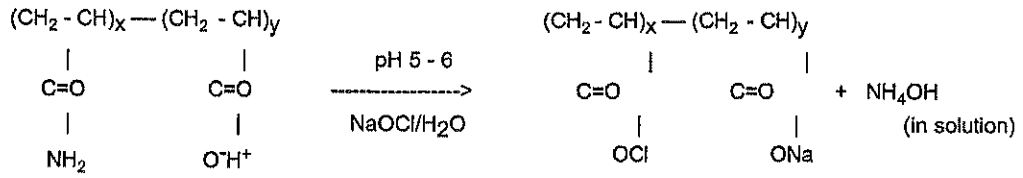

High molecular weight — Low molecular weight adheres to mineral surfaces

<u>KleanBreak Primary Reaction & Calcium Hypochlorite:</u>

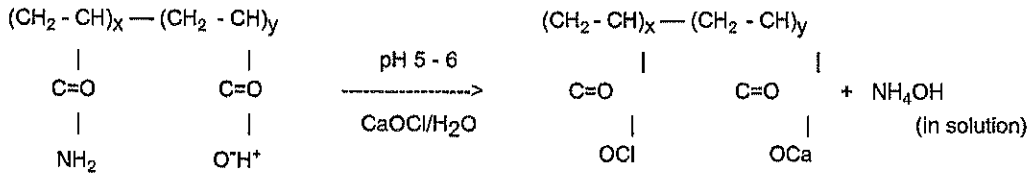

High molecular weight residues — Low molecular weight insoluble calcium/mineral

The above information is provided to in this document is for your and your Companies' sole use. Reproduction or distribution of this document without prior written authorization from KB International LLC is strictly forbidden.

We recommend KleanBreak be used for degradation of CDP in preference to calcium or sodium hypochlorite as it yields a more rapid degradation with a more stabile precipitate. KleanBreak and calcium hypochlorite also require significantly lower dosages than sodium hypochlorite, thereby significantly reducing the quantity of chlorine in the reaction. Typically, 0.75 pounds of KleanBreak will replace one pound of calcium hypochlorite, and one pond of calcium hypochlorite will typically replace ten gallons of sodium hypochlorite (Clorox) in treating 1,000 gallons of CDP slurry. Typical dosage rates for KleanBreak and calcium hypochlorite range from 0.05 to 0.2 kg/m^3 (0.417 to 1.67 lb/1000 gal).

The amount of acid required will be determined by the EB total value of the fluid at that point plus the amount of active but suspended lime solids or other alkaline type soils along with the concrete contaminations. The estimated treatment per cubic meter, or metric ton, of fluid is as follows:

The amount of Acid Needed per Ton of Fluid:

Fluid Alkalinity, EB, total as OH-	Kg. of 99% Acetic Acid /Ton of fluid	Kg. of 37% Muriatic Acid/Ton of fluid	Kg. of 95% Sulfuric Acid/ Ton of fluid
500 ppm	1.75	2.9	1.5
1000	3.5	5.9	3.0

Following the pH adjustment Kleenbreak™ is added to the circulating fluid stream from a return pump. If KleanBreak is not available on site calcium hypochlorite may be substituted. When using KleanBreak or a hypochlorite **stay upwind** of the as the fumes and dusts are hazardous to the lungs, throat and eyes. Sodium hypochlorite can be substituted for small jobs, i.e., laundry chlorine based bleach. This material is only approximately 5% active and will take around12 times as much as the use of KleanBreak indicated below.

Add 1.25 pounds "KleanBreak" per 1000 US gallons of fluid.

The Marsh Funnel Viscosity will be reduced rapidly upon dissolving into the fluid.

Test the fluid for residual chlorine prior to release to the approved water system.

The above information is provided to in this document is for your and your Companies' sole use. Reproduction or distribution of this document without prior written authorization from KB International LLC is strictly forbidden.

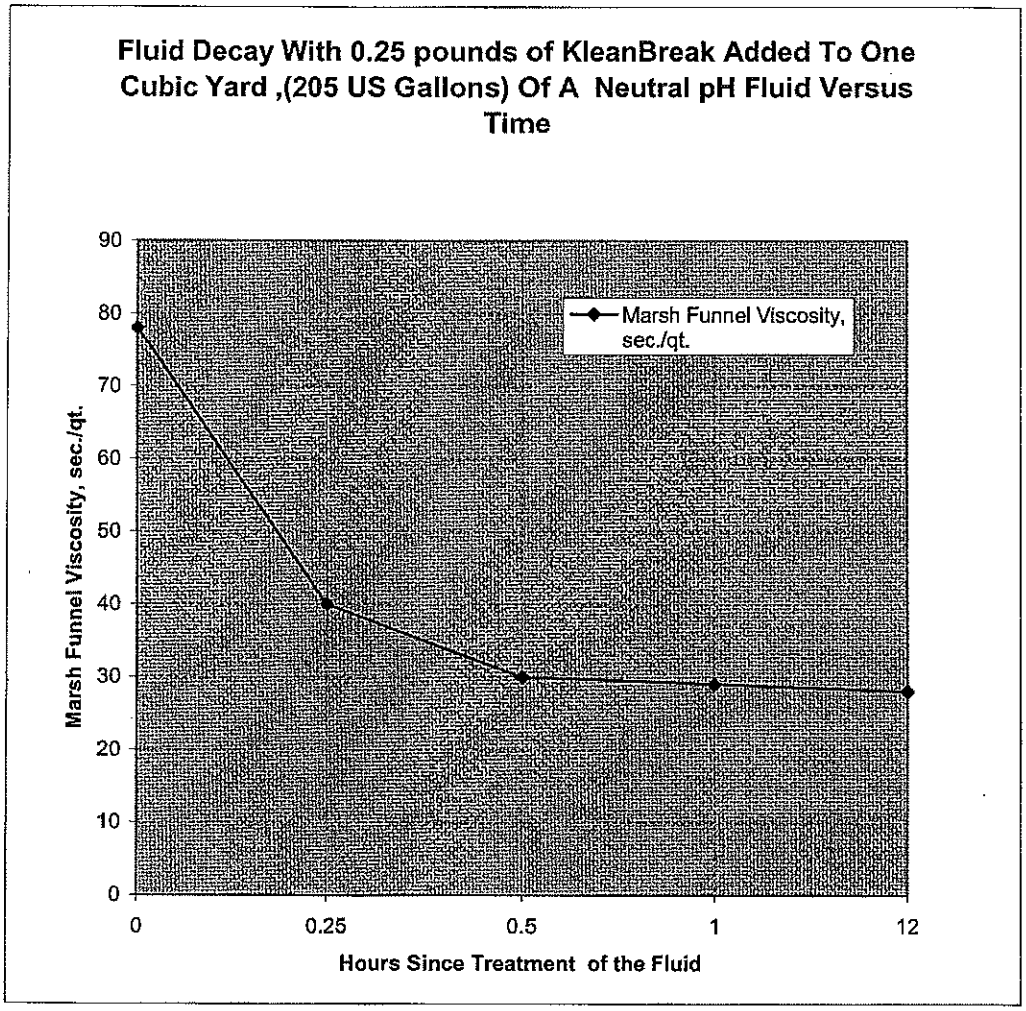

I hope the attached information is satisfactory for your needs. If you have any questions please contact me.

Sincerely yours,
KB Technologies Ltd

K. Gifford Goodhue, Jr.
Director Technology & Marketing

The above information is provided to in this document is for your and your Companies' sole use. Reproduction or distribution of this document without prior written authorization from KB International LLC is strictly forbidden.