43V-105

INDEX OF SHEETS	
SHEET NO.	DESCRIPTION
1	Title Sheet
1A	Index Of Sheets Cont'd. & Std. Dwg. Nos.

STATE OF OREGON
DEPARTMENT OF TRANSPORTATION
PLANS FOR PROPOSED PROJECT

GRADING, PAVING & STRUCTURES

OR138W: DODGE CR/CALAPOOYA CR BRIDGE REPLACEMENTS

ELKTON - SUTHERLIN HIGHWAY
DOUGLAS COUNTY
NOVEMBER 2010

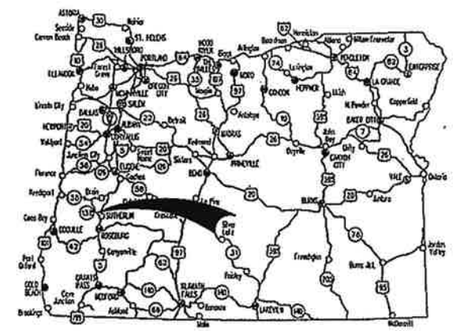

Overall Length Of Project – 0.70 Miles

BEGINNING OF PROJECT
X-BRS-S231 (011)
STA. "L" 1084+00.0 (M.P. 20.74)

END OF PROJECT
X-BRS-S231 (011)
STA. "L"1162+10.00 (M.P. 22.22)

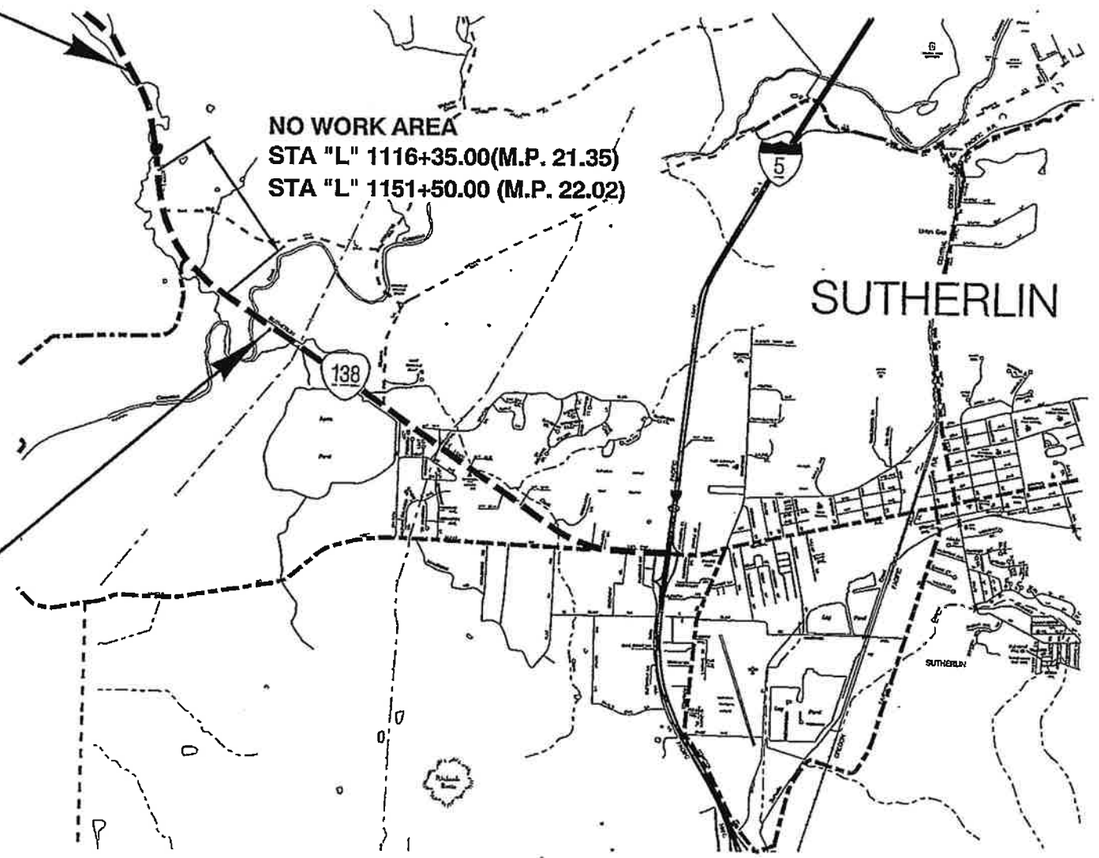

T. 25S., R. 6W., W.M.

ATTENTION:
Oregon Law Requires You To Follow Rules Adopted By The Oregon Utility Notification Center. Those Rules Are Set Forth In OAR 952-001-0010 Through OAR 952-001-0090. You May Obtain Copies Of The Rules By Calling The Center. (Note: The Telephone Number For The Oregon Utility Center Is (503) 232-1987.)

LET'S ALL WORK TOGETHER TO MAKE THIS JOB SAFE

OREGON TRANSPORTATION COMMISSION

Gail Achterman	CHAIR
Michael Nelson	VICE-CHAIR
Mary Olson	COMMISSIONER
Alan Brown	COMMISSIONER
David Lohman	COMMISSIONER
Matthew L. Garrett	DIRECTOR OF TRANSPORTATION

These plans were developed using ODOT design standards. Exceptions to these standards, if any, have been submitted and approved by the ODOT Chief Engineer or their delegated authority.

Approving Authority: M. Thompson 8-30-10
Signature & date

Mark Thompson Reg. 3 Tech. Ctr. Mgr.
Print name and title

Concurrence by ODOT Chief Engineer

OR138W: DODGE CR/CALAPOOYA CR BRIDGE REPLACEMENTS
ELKTON - SUTHERLIN HIGHWAY
DOUGLAS COUNTY

FEDERAL HIGHWAY ADMINISTRATION	PROJECT NUMBER	SHEET NO.
OREGON DIVISION	X-BRS-S231 (011)	1

INDEX OF SHEETS, CONT'D.

SHEET NO.	DESCRIPTION
1B	Survey Control Sheet
2 thru 2A-5	Typical Sections
2B thru 2B-6	Details
2C thru 2C-7	Traffic Control
2D	Pipe Data
3	Alignment & Right of Way
3A	General Construction
3B	Profile
4	Alignment & Right of Way
4A	General Construction
4B	Profile
5	Alignment & Right of Way
5A	General Construction
5B	General Constrution Notes
5C	Profile
6	Alignment & Right of Way
6A	General Construction
6B	Profile
7	General Construction
7A	Profile
8	General construction
9	General Construction
9A	Profile

SHEET NO.	DESCRIPTION
	GEO/HYDRO/ENVIRONMENTAL
GA	Erosion Control Plan
GA-2	Erosion Control Plan
GA-3	Erosion Control Plan
GA-4	Erosion Control Plan
GN	Planting Plan
GN-2	Planting Plan
GN-3	Planting Plan
GN-4	Planting Plan

DRAWING NO.	DESCRIPTION
	#21162 BRIDGE
84739	Plan and Elevation
84740	General Notes and Miscellaneous
84741	Foundation Data
84742	Footing Plan
84743	Deck Plan
84744	Typical Deck Section & Girder Schedule
84745	30" Precast Prestressed Slab
84746	Bent 2 Details
84747	Wingwall Details
84748	Retaining Wall - Plan and Elevation
84749	Wall Details

DRAWING NO.	DESCRIPTION
	#21163 BRIDGE
84765	Plan and Elevation
84766	General Notes & Miscellaneous
84767	Foundation Data
84768	Stage Construction Details
84769	Footing Plan
84770	Deck Plan
84771	Typical Deck Section
84772	Plan and Elevation - Steel Plate Girder
84773	Camber Details - Steel Plate Girder
84774	Miscellaneous Welding Details
84775	Intermediate Cross Frames
84776	Intermediate & End Cross Frames
84777	Plan and Elevation - Bent 2 (Bent 1 Similar)
84778	Bent Details
84779	Wingwall & Pay Limit Details

DRAWING NO.	DESCRIPTION
	#20861 BRIDGE
84334	Plan and Elevation
84335	General Notes & Construction Sequence
84336	Foundation Data
84337	Footing Plan
84338	Deck Plan
84339	Typical Deck Section
84340	Framing Plan - Span 1
84341	Framing Plan - Span 2
84342	Steel Girder - Span 1
84343	Steel Girder - Span 2
84344	Steel Girder Splice
84345	Welding Details
84346	Bent Cross Frames
84347	Intermediate Cross Frame
84348	Bent 3 (Bent 1 similar)
84349	Bent 1 Section (Bent 3 Similar)
84350	Wingwalls
84351	Bent 2
84352	Bent 2 Bearings And Shear Lug
84353	Concrete Placement & Construction Details

	PERMANENT PAVEMENT MARKINGS
ST-1	Striping Plan (Dodge Creek)
ST-2	Striping Plan (Calapooya Creek)

	PERMANENT SIGNING
S-12246 thru S-12248	Signing Plan
S-12249	Signing Details
S-12250	Sign & Post Data Table

Standard Dwg. Nos.

RD100	- Mailbox Support
RD101	- Mailbox Installation
RD140	- Roadway Cross Slopes Superelevated Sections
1 RD300	- Trench Backfill, Bedding, Pipe Zone And Mult. Installations
RD312	- Subsurface Drain
RD316	- Sloped Ends For Metal Pipe
RD318	- Sloped Ends For Concrete Pipe
RD320	- Paved End Slope For Culverts 60" Maximum Pipe Size
RD326	- Coupling Bands For Corrugated Metal Pipe
RD364, RD370	- Concrete Inlets
1 RD380, RD386, RD388, RD390	- Pipe Fill Height Tables
RD400, RD405, RD410, RD415, RD420, RD450	- Guardrail
RD500	- Precast Concrete Barrier Pin And Loop Assembly
RD515	- Median Barrier Anchoring Details
RD516	- Securing Concrete Barrier To Roadway
RD520	- Cast-In-Place Conc. Barrier Transition To Bridge Rail
RD526	- Standard Concrete Barrier Buried In Backslope
RD530	- Guardrail Transition To Concrete Barrier
RD610	- Asphalt Pavement Details
RD715	- Approaches And Non-Sidewalk Driveways
RD1005	- Check Dams
1 RD1010, RD1015	- Inlet Protection
RD1025	- Sediment Barrier
RD1040	- Sediment Fence
BR165	- Bridge End Panel
BR200	- Concrete Bridge Rail Type F
BR203	- Transition Concrete Bridge Rail To Guardrail
BR310	- Bulb-T Beam Girders
BR422	- 30" Precast Prestressed Slab
BR445	- Precast Prestressed Boxes & Slabs
BR705	- Standard Retaining Walls Front Face Battered 1" Per Ft.
1 TM200	- Sign Installation Details
TM201	- Miscellaneous Sign Placement Details
TM204	- Flag Board Mounting Details
1 TM221, TM222	- Milepost Marker Details
TM500, TM502	- Pavement Marking Standard Details
TM521	- Durable Pavement Markings
TM530	- Intersection Pavement Markings
TM560	- Alignment Layout
TM570	- Traffic Delineators
TM571	- Traffic Delineators Steel Post Details
1 TM635	- Breakaway Sign & Luminaire Supports
TM670	- Wood Post Sign Supports
TM671	- 3 Second Gust Wind Speed Isotach
TM800	- Tables, Abrupt Edge And PCMS Details
1 TM810	- Temporary Reflective Pavement Markers
TM820	- Temporary Barricades
TM821	- Temporary Sign Supports
TM830	- Temporary Concrete Barrier And Rumble Strips
TM831	- Temporary Impact Attenuators
TM850	- 2-Lane, 2 Way Roadways
TM870	- Bridge Construction

R/W Map No. 11B-4-7 and 7B-12-4

No.	DATE	REVISIONS	BY
1	10-11-10	Added standard drawing numbers	

OR138W: DODGE CR/CALAPOOYA CR BRIDGE REPLACEMENTS

ELKTON - SUTHERLIN HIGHWAY
DOUGLAS COUNTY

FEDERAL HIGHWAY ADMINISTRATION	PROJECT NUMBER	SHEET NO.
OREGON DIVISION	X-BRS-S231 (011)	1A

Sec. 14, T. 25S, R. 6W, W.M.
CALAPOOYA BRIDGE

43V-105

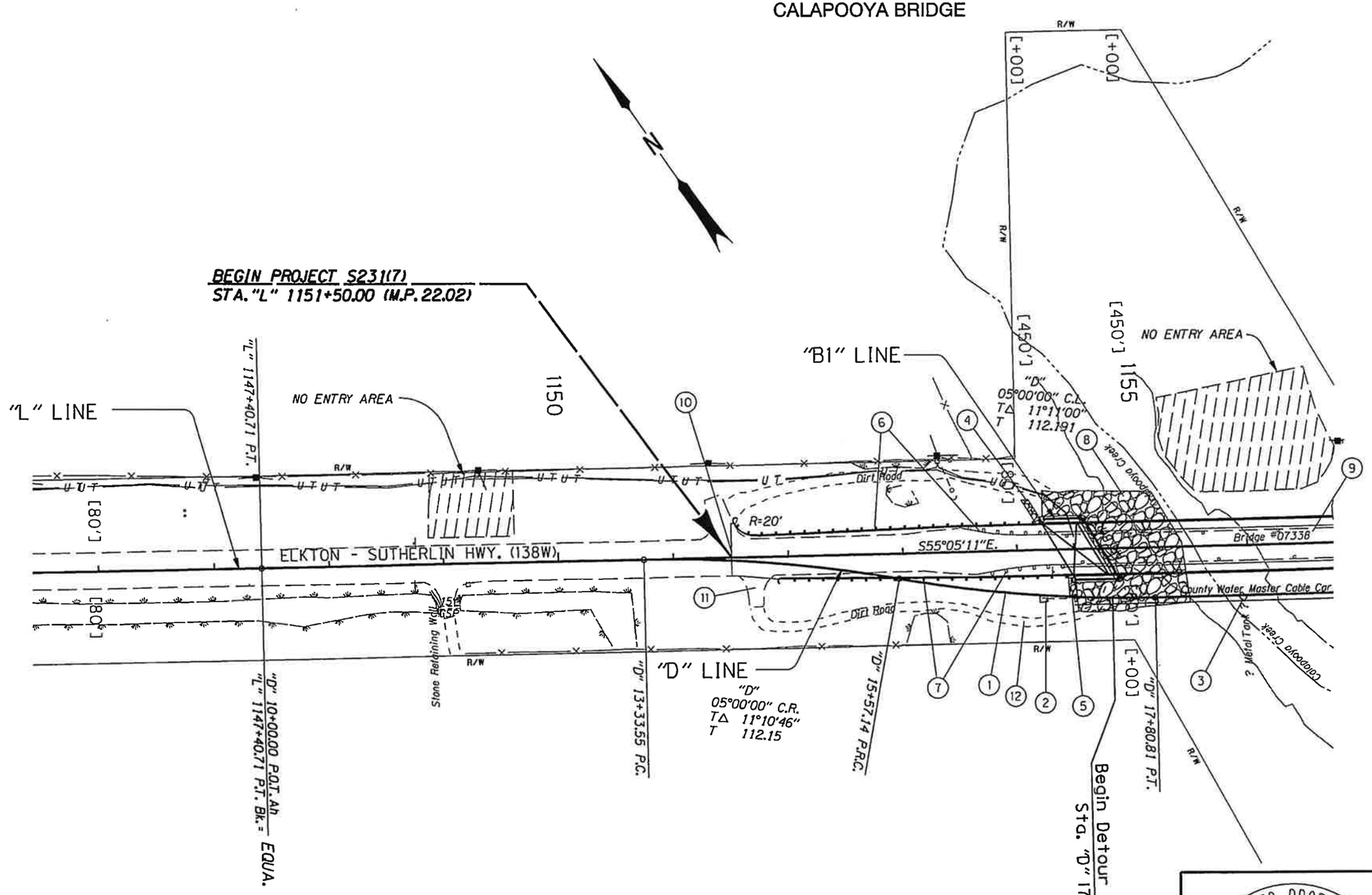

(1) Sta. "D"14+29.00 to Sta. "D"24+00.00
Construct detour
Remove detour
(For Detour Plan, see sht. 9)

(2) Sta. "L"1154+19.32 to Sta. "L"1157+96.05, 43.2' Rt.
Remove gauge station

(3) Sta. "L"1155+90.0, 44.5'Rt.
Remove metal tank

(4) Sta. "L"1154+20.0, Lt.
Const. loose riprap ditch - 14.4 C.Y.
(Class 50)
(For details, see sht. 2B-6)

(5) Sta. "L"1154+49.5, Rt.
Const. loose riprap ditch - 18 C.Y.
(Class 50)
(For details, see sht. 2B-6)

(6) Sta. "L"1151+51.89 to Sta. "L"1154+22.73, Lt.
Remove guardrail - 80.5'
Const. guardrail - 225' (type 2A)
25' (type 2A) R=20'
12.5' (type 3)
Const. guardrail to bridge transition
Flare rate = 0, W = 0, E = 2'
Const. anchor - 2 (Type 1, Mod)
Inst. end piece (Type B)
(For details, see sht. 2B-3)

(7) Sta. "L"1151+78.55 to Sta. "L"1154+48.91, Rt.
Remove guardrail - 80.5'
Const. guardrail - 187.5'(type 2A)
- 12.5' (type 3)
Const. guardrail to bridge transition
Flare rate = 0, W = 0, E = 2'
Const. guardrail terminal, non-flared (L=37.5')

(8) Sta. "B1"0+00 to Sta. "B1"1+35.83
Constr. Class 700 riprap revetment -1200 C.Y.
(For details, see sht. 2B-6)

(9) Remove Bridge #07338
Const. Bridge #20861
(For bridge dwgs. see sht. 1A)

(10) Const. Pvmt. match
(For details see sht. 2B-2)

(11) Remove access

(12) Obliterate roadway

Note:
1. Guardrail design is based on a terminal length of 37.5'. If longer terminal is used, reduce the length of type 2A guardrail accordingly.

2. For Earth work distribution see sht. 7A

REGISTERED PROFESSIONAL ENGINEER
64309PE
OREGON
MAY 9, 2006
JAMES PATRIC BURFORD
RENEWS DATE: 12-31-2011

OREGON DEPARTMENT OF TRANSPORTATION

REGION 3 - TECHNICAL CENTER

OR138W: DODGE CR/CALAPOOYA CR
BRIDGE REPLACEMENTS
ELKTON - SUTHERLIN HIGHWAY
DOUGLAS COUNTY

Design Team Leader - James P. Burford
Designed By - Richard Coffel
Drafted By - Linda Coffel

GENERAL CONSTRUCTION

SHEET NO. 7

F:\ODOT_DATA\Projects\15970_Calapooya creek bridge\roadway\14813.pl1 :: Default 8/30/2010 12:45:47 PM hwye32v

1:1200 - 001

Sec. 14, T. 25S, R. 6W, W.M.
CALAPOOYA BRIDGE

43V-105

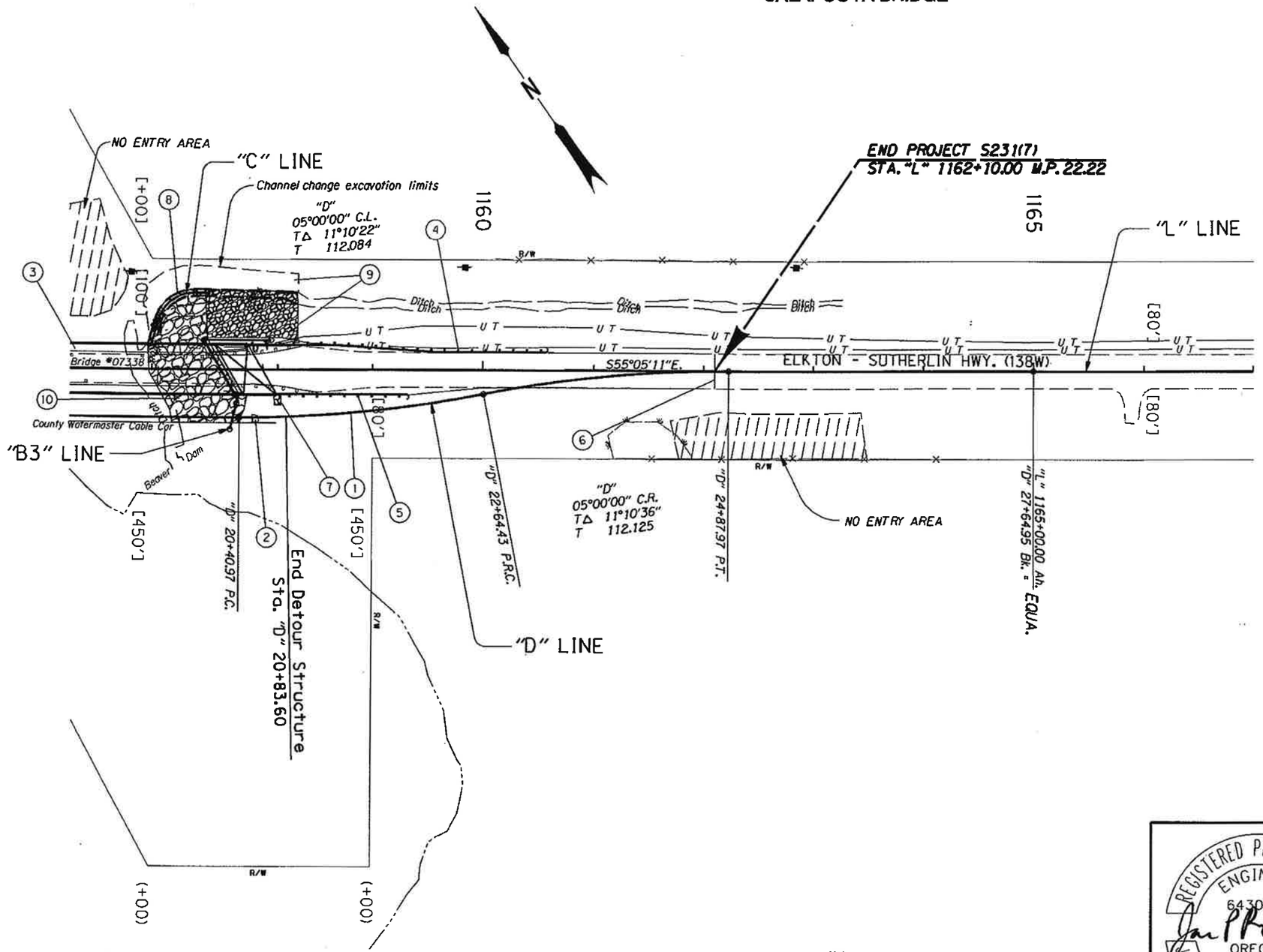

1. See sht. 7, note 1
2. See sht. 7, note 2
3. See sht. 7, note 8
4. Sta. "L"1157+86.09 to Sta. "L"1160+56.74. Lt.
   Remove guardrail - 80.5'
   Const. guardrail - 200' (type 2A)
   - 12.5' (type 3)
   Extra for 8' guardrail posts - 61
   Const. guardrail to bridge transition
   Const. guardrail terminal, non-flared (L= 37.5')
5. Sta. "L"1158+12.27 to Sta. "L"1159+30.69, Rt.
   Remove guardrail - 80.5'
   Const. guardrail - 50' (type 2A)
   - 12.5' (type 3)
   Const. guardrail to bridge transition
   Flare rate = O. W = O. E = 2'
   Const. guardrail terminal, non-flared (L= 37.5')
6. Const. pvmt. match
   (For details see sht. 2B-2)
7. Sta. "L"1158+13.0 Rt.
   Const. loose riprap inlay - 4 C. Y.
   (Class 50)
   (For details, see sht. 2B-6)
8. Sta. "C"0+00 to "C"0+83.58
   Const. channel change
9. Sta. "L"1157+52.30 to Sta. "L"1158+31.67 Lt.
   Const. channel change
   Match channel change to extg. channel
10. Sta. "B3"0+55.23 to Sta. "B3"1+50.31
    Const. Class 700 riprap revetment - 970 C.Y.
    (For details, see sht. 2B-6)

No.	DATE	REVISIONS	BY
1	10-11-10	Changed Rt. to Lt.	B

Note:
Guardrail design is based on a 37.5' end terminal.
Contractor is responsible for design adjustments if another terminal is used.

REGISTERED PROFESSIONAL ENGINEER
64309PE
OREGON
MAY 9, 2000
JAMES PATRIC BURFORD
RENEWS DATE: 12-31-2011

OREGON DEPARTMENT OF TRANSPORTATION
REGION 3 - TECHNICAL CENTER

OR138W: DODGE CR/CALAPOOYA CR
BRIDGE REPLACEMENTS
ELKTON - SUTHERLIN HIGHWAY
DOUGLAS COUNTY

Design Team Leader - James P. Burford
Designed By - Richard Coffel
Drafted By - Linda Coffel

GENERAL CONSTRUCTION

SHEET NO. 8

F:\ODOT_DATA\Projects\15970_Calapooya creek bridge\roadway\14813.pl1 :: Default 10/11/2010 9:09:30 AM hwye32v

1:1200 - 002

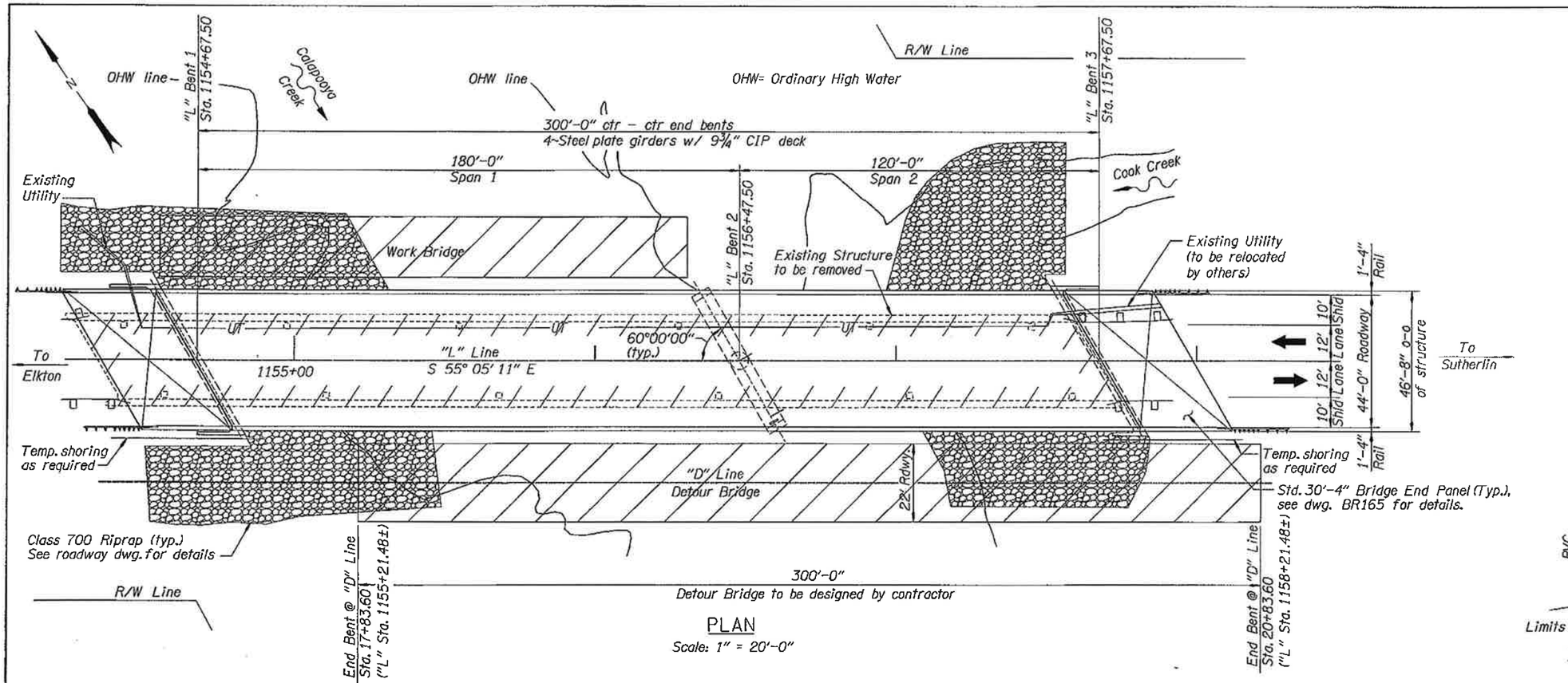

PLAN

Scale: 1" = 20'-0"

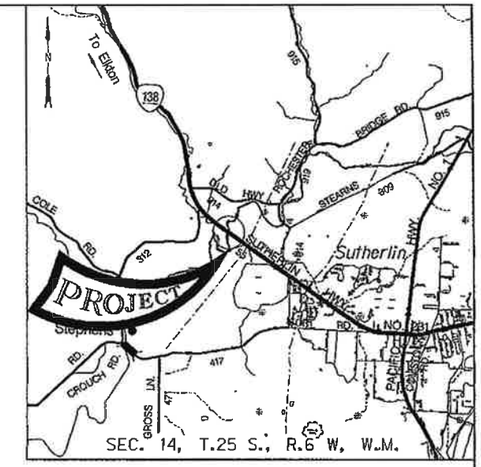

LOCATION MAP

No Scale

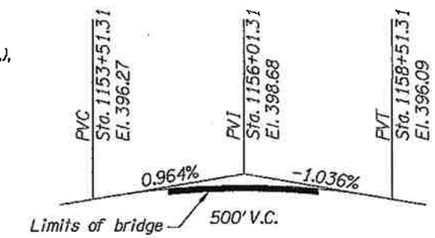

"L" GRADE LINE DIAGRAM

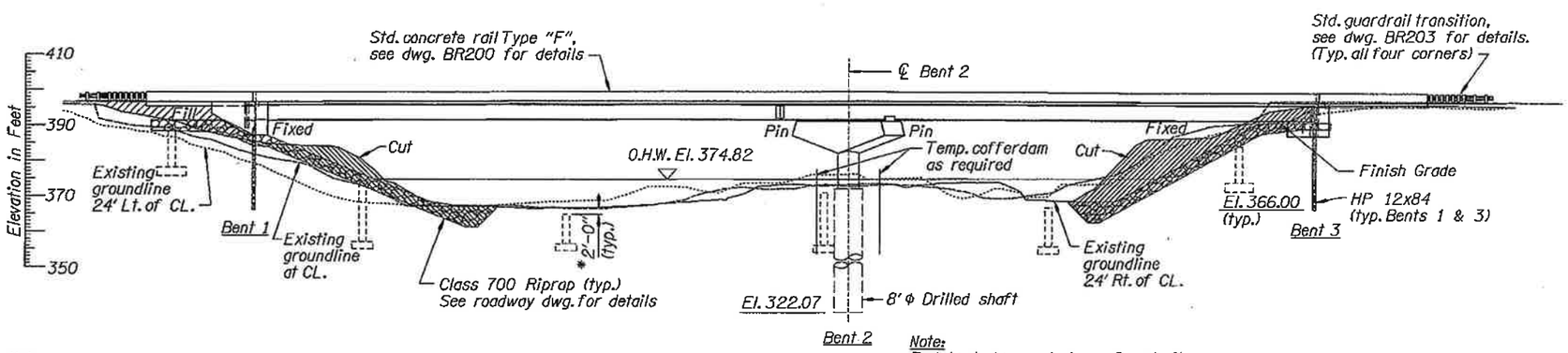

ELEVATION

Scale: 1" = 20'-0"

Note:
End bent skew not shown for clarity.

HYDRAULIC DATA				
ITEMS	(UNITS)	DESIGN FLOOD	BASE FLOOD	MAX. PROBAB. FLOOD
DISCHARGE	ft^3/s	33,000	37,300	50,000
RECURRENCE INTERVAL	(YRS.)	50	100	500
H.W. ELEVATION AT UPSTREAM FACE OF BRIDGE	ft	388.2	389.5	393.0
BACKWATER	ft	0.7	0.8	1.7

For General Notes see dwg. 84335

Note:
Elevations shown are based on North American Vertical Datum, 1988.

*Remove existing columns 2'-0" below finish grade. Leave existing footings in place.

Existing bridge #07338 dwgs. for information only: 10392-10397, 37320, 37258, 37352

SCALE WARNING
If scale bar doesn't measure one inch then drawing is not to scale

DATE	REVISION	BY

ACCOMPANIED BY DWGS. 84335 thru 84353, BR165, BR200, BR203

DRAFTER: E. Leon
DESIGNER: Robert Kaspari
CHECKER: Steve Garlick
REVIEWER: R. Grubbs

STRUCTURAL REGISTERED PROFESSIONAL ENGINEER 12560 OREGON JULY 13, 1984 ROBERT V. KASPARI
RENEWS: 6/30/2011

OREGON DEPARTMENT OF TRANSPORTATION
BRIDGE ENGINEERING HEADQUARTERS
355 Capitol St NE, Rm 301
Salem, OR 97301-3871
(503) 986-4200

STRUCTURE NO. 20861
DATE August - 2010
CALC. BOOK 5743

CALAPOOYA CREEK, HWY 231
OR138W: DODGE CR/CALAPOOYA CR BRIDGE REPLACEMENTS
ELKTON-SUTHERLIN HWY 138, MP 22.10
DOUGLAS COUNTY

PLAN AND ELEVATION

SHEET 1 OF 20
DRAWING NO. 84334

F:\ODOT_DATA\PROJECTS\14813(calapooya creek)\EJL20861L.dgn :: Default 8/10/2010 8:26:31 AM hwye03b 1:240 - 1Plan

GENERAL NOTES:
Provide all materials and perform all work according to the Oregon Standard Specifications for Construction 2008.
Bridge is designed in accordance with the 2007 edition of the AASHTO LRFD Bridge Design Specifications (including 2007 thru 2008 interim revisions) and ODOT BDDM with an allowance of 25psf for future wearing surface and all of the following Live Loads :

Service and Strength I Limit States:
HL-93: Design truck (or trucks per LRFD 3.6.1.3) or the design tandems and the design lane load.
Strength II Limit State:
ODOT Type STP-5BW Permit truck
ODOT Type STP-4E Permit truck

Seismic design is performed by the single-mode analysis in accordance with the "AASHTO LRFD Bridge Design Specifications" as modified by the "ODOT Bridge Design & Drafting Manual". The 2002 USGS Seismic Hazard Maps have been used to collect the Seismic Hazard Values for the bridge site with Latitude 43°-20' and Longitude 123°-15':

1000 Year Return Period ("No Collapse" criteria)
Horizontal Peak Ground Acceleration Coefficient, PGA=0.24g
Horizontal Response Spectral Acceleration Coefficients: Ss=0.53g, S1=0.25g

500 Year Return Period ("Serviceable" criteria)
Horizontal Peak Ground Acceleration Coefficient, PGA=0.14g
Horizontal Response Spectral Acceleration Coefficients: Ss=0.31g, S1=0.15g
The bridge site is defined as a Site Class A with Site Factors of: Fpga=0.80, Fa =0.80, and Fv=0.80.
The Response Modification factors used are: R= 2.0 for column moments, R= 0.8 for abutment connections, and R= 1.0 for other components.

STRUCTURAL STEEL NOTES:
Provide 7/8" diameter Type 3 high-strength fasteners at structural connections according to AASHTO Specification M164 (ASTM Specification A325) unless shown otherwise.
Provide anchor bolts according to AASHTO M314, Grade 105 or ASTM A449.
Provide all other fasteners conforming to AASHTO M314, Grade 36 (ASTM A307) and/or AASHTO M314 Grade 105 (ASTM A449) as shown on the detail plans. Hot-dip galvanize after fabrication.
Shear connector studs shall be made from cold-drawn bars, Grade 1015, 1018, or 1020 fully killed, conforming to AASHTO M169 (ASTM A108) with a minimum yield and tensile strength of 60 ksi.
See the Special Provisions for detailed coating and tightening requirements.
Do not punch or drill holes in webs of interior girders for falsework.
Coat all girders as shown, in accordance with the Specifications.
The finish coat on all girders conform to Federal Color Standards most closely matching steel rusted shade.
Submit rusted shade color to engineer for approval.
All longitudinal dimensions are on a horizontal line - adjust for superelevation and grade.
All stiffeners and beam ends are to be vertical in final erected position unless noted otherwise.
Web thickness shown may be increased up to 1/16".
Additional compression flange weld splices will be permitted at locations approved by the engineer.
Steel in top and bottom flanges shall conform to ASTM A709 (AASHTO M270), Grade HPS 70W.
Steel in web shall conform to ASTM A709 (AASHTO M270), Grade HPS 70W.
All other steel shall conform to ASTM A709 (AASHTO M270), Grade 50W unless noted otherwise.
⊛ Indicates check sample required from flange plates so marked, see Special Provisions.
For the purpose of charpy toughness testing and welding inspection/repair, etc., main load carrying members are Girders and Stiffeners.
Assumed design temperature is 52° F.

WELDING NOTES:
All general welding shall conform to the latest edition of AWS D1.1.
All reinforcing welding shall conform to the latest edition of AWS D1.4.
All bridge welding shall conform to the latest edition of AWS D1.5.

BOLTING NOTES:
All high strength bolts shall be tightened using the "Turn-of-Nut Tightening" method according to the 2008 Oregon Standard Specifications for Construction.
All high strength bolted connections are slip-critical connections.

FOUNDATION NOTES:
See Footing Plan for foundation design notes.

REINFORCING NOTES:
Provide spiral column reinforcement and column vertical bars according to ASTM A706, AASHTO M31 (ASTM A615) Grade 60, AASHTO M225 (ASTM A496), or AASHTO M32 (ASTM A82).

Provide all other reinforcing steel according to ASTM Specification A706, or AASHTO M31 (ASTM A615) Grade 60. Use the following splice lengths unless shown otherwise:

REINFORCING SPLICE LENGTHS (CLASS B) GRADE 60 f'c = 3.3 ksi

Bar Size	#3	#4	#5	#6	#7	#8	#9	#10	#11	#14 & #18
Uncoated	1'-0"	1'-4"	1'-8"	2'-0"	2'-9"	3'-7"	4'-6"	5'-9"	7'-0"	Not Permitted
Coated (1)	1'-2"	1'-7"	2'-0"	2'-5"	3'-3"	4'-3"	5'-5"	6'-10"	8'-5"	Not Permitted
Coated (2)	1'-6"	2'-0"	2'-6"	3'-0"	4'-1"	5'-4"	6'-9"	8'-7"	10'-6"	Not Permitted

REINFORCING SPLICE LENGTHS (CLASS B) GRADE 60 f'c = 4.0 ksi

Bar Size	#3	#4	#5	#6	#7	#8	#9	#10	#11	#14 & #18
Uncoated	1'-0"	1'-4"	1'-8"	2'-0"	2'-6"	3'-3"	4'-1"	5'-2"	6'-4"	Not Permitted
Coated (1)	1'-2"	1'-7"	2'-0"	2'-5"	3'-0"	3'-11"	4'-11"	6'-3"	7'-8"	Not Permitted
Coated (2)	1'-6"	2'-0"	2'-6"	3'-0"	3'-8"	4'-10"	6'-2"	7'-9"	9'-6"	Not Permitted

Use coated (1) for epoxy coated bars with cover at least $3*d_b$ and clear spacing between bars at least $6*d_b$.

Use coated (2) for epoxy coated bars with cover less than $3*d_b$ or clear spacing between bars less than $6*d_b$.

Increase all splice lengths 40% for horizontal or nearly horizontal bars so placed that more than 12" of fresh concrete is cast below the bar.

d_b = bar diameter
Splice reinforcing steel at alternate bars, staggered at least one splice length or as far as possible, unless shown otherwise.
Support the bottom mat reinforcing steel from the forms with precast mortar blocks at 24" maximum centers each way. Support the top mat of reinforcing steel from the bottom mat of reinforcing steel with wire bar supports as shown in Chapter 3 of the CRSI Manual of Standard Practice (SBU, BBU, or CHCU). Place wire bar supports at 24" maximum centers.
Use uncoated reinforcing steel in the deck and bridge end panel. This includes top and bottom longitudinal bars, (and) top and bottom transverse bars, and all bars extending into the parapet.
Place bars 2" clear of the nearest face of concrete unless shown otherwise.
Do not fabricate reinforcing steel for columns until final foundation elevations have been determined in the field.
Contractor shall have the option to replace lap splices with approved mechanical splices.

CONCRETE NOTES:
Provide Class HPC4000 - 3/4 concrete in deck.
Provide Class 3300 (Seal Concrete) - 1 1/2, 1, 3/4 concrete in seals.
Provide Class 4000 - 3/8 concrete for all drilled shafts.
Provide Class HPC4000 - 1 1/2, 1, 3/4 concrete in reinforced concrete end panels.
Provide Class 3300 - 1 1/2, 1, 3/4 concrete for all other concrete.
Chamfer all concrete corners 3/4" unless shown otherwise.

GENERAL CONSTRUCTION SEQUENCE:

NOTE: All ground effecting work within the OHW limits shall be performed from July 1st to Sept. 15th

1. Construct Temporary Detour Bridge.
2. Shift Traffic to detour.
3. Construct temporary work bridge.
4. Remove existing structure.
5. Excavate for Bent 2.
6. Construct Bent 2 drilled shaft.
7. Construct Bent 2 column.
8. Excavate for riprap revetment, shore as required.
9. Excavate for Bents 1 and 3 pile caps.
10. Drive piles for Bents 1 and 3.
11. Place Class 700 riprap revetment.
12. Construct Bents 1 and 3 pile caps.
13. Construct Bent 2 cross beam.
14. Place steel girders and install cross frames.
15. Construct deck formwork.
16. Pour deck. Deck screeding shall be done normal to the roadway centerline.
17. Construct Bents 1 and 3 backwalls.
18. Pour wingwalls and shear lugs.
19. Pour closure pours.
20. End bents may be backfilled after concrete has reached the required strength and a minimum of 7 days after placement.
21. Pour end panels.
22. Pour concrete rails after deck & end panel concrete has reached design strength and a minimum of 7 days after placement. Wet cure shall be maintained for 14 days.
23. Remove detour bridge and temporary work platform.
24. Finalize placement of riprap.

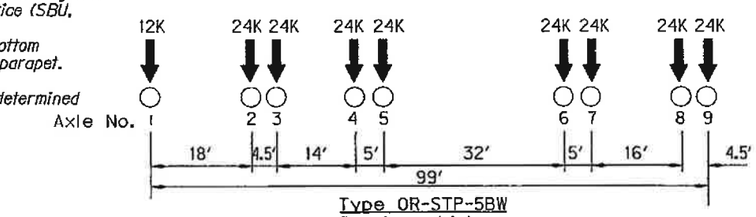

Type OR-STP-5BW
9 axle vehicle
Gross weight = 204K

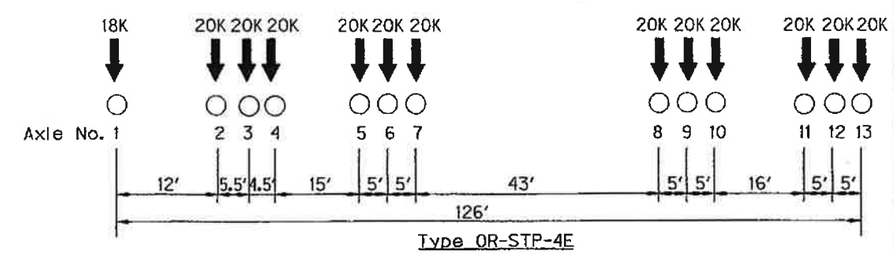

Type OR-STP-4E
13 axle vehicle
Gross weight = 258K

SCALE WARNING
If scale bar doesn't measure one inch then drawing is not to scale

△	DATE	REVISION	BY

ACCOMPANIED BY DWGS. See sheet 1 for this structure

DRAFTER: E. Leon
DESIGNER: Robert Kaspari
CHECKER: Steve Garlick
REVIEWER: R. Grubbs

STRUCTURAL REGISTERED PROFESSIONAL ENGINEER 12560 OREGON JULY 13, 1984 ROBERT V. KASPARI
RENEWS: 6/30/2011

OREGON DEPARTMENT OF TRANSPORTATION
BRIDGE ENGINEERING HEADQUARTERS
355 Capitol St NE, Rm 301
Salem, OR 97301-3871
(503) 986-4200

STRUCTURE NO. 20861
DATE August - 2010
CALC. BOOK 5743

CALAPOOYA CREEK, HWY 231
OR138W: DODGE CR/CALAPOOYA CR BRIDGE REPLACEMENTS
ELKTON-SUTHERLIN HWY 138, MP 22.10
DOUGLAS COUNTY

GENERAL NOTES & CONSTRUCTION SEQUENCE

SHEET 2 OF 20
DRAWING NO. 84335

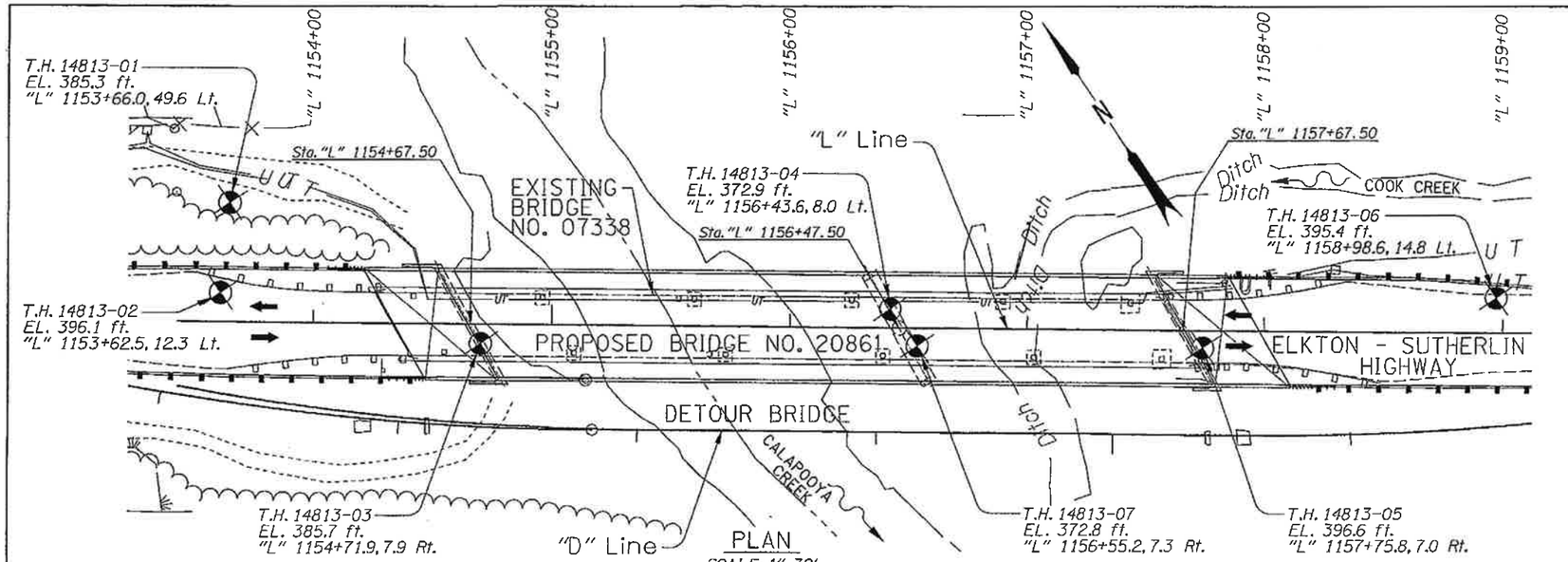

PLAN
SCALE: 1"=30'

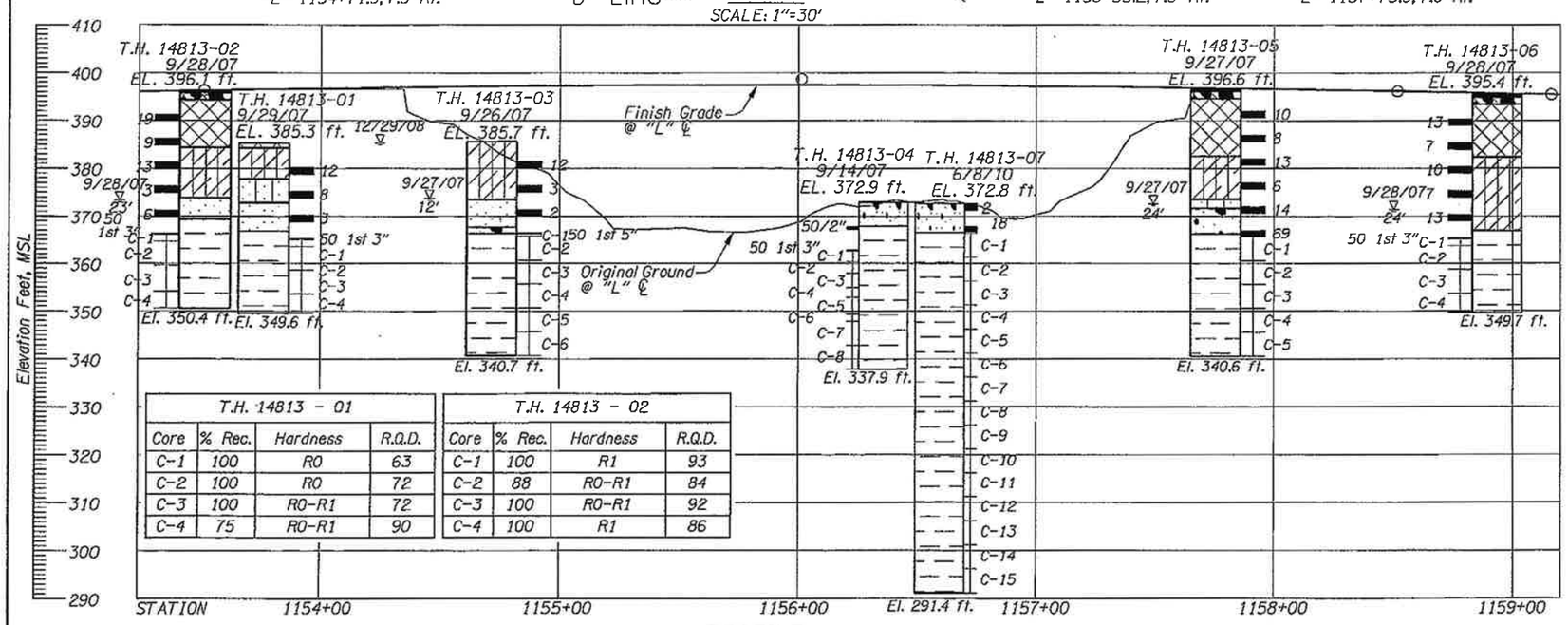

T.H. 14813 - 01			
Core	% Rec.	Hardness	R.Q.D.
C-1	100	R0	63
C-2	100	R0	72
C-3	100	R0-R1	72
C-4	75	R0-R1	90

T.H. 14813 - 02			
Core	% Rec.	Hardness	R.Q.D.
C-1	100	R1	93
C-2	88	R0-R1	84
C-3	100	R0-R1	92
C-4	100	R1	86

PROFILE
SCALE : Vertical 1"=15'
Horizontal 1"=30'

In accordance with ASTM D1586-84, N Values are reported for an interval of 12" except as noted.

15 = Standard penetration test - N value

C-1 = Rock Core

= Drill hole location

= Depth of groundwater measured in test hole on the date shown

Note: Dimensions are in feet (ft.) except as noted.

Legend

AC

Base Rock

Calapooya Unit-1
Sandy GRAVEL with trace to some silt, cobbles and boulders, GW; to Gravelly SAND with some cobbles and boulders trace silt and clay, SP; to Gravelly Clayey SILT with trace to some clay cobbles and boulders, ML; to Gravelly Sandy SILT with some clay cobbles and boulders, ML; to Sandy SILT with trace gravel, ML; to Gravely SAND with some silt, SP; to Sandy SILT, ML; brown, gray-brown gray, dark gray, nonplastic to medium plasticity, dry to moist, loose to medium dense and medium stiff to stiff, fine to medium sand, fine to coarse gravel. (Fill)

Calapooya Unit-2
CLAY, CH, to CLAY with some sand, CH, to Clayey SILT with trace to some sand, MH, to SILT with some clay and sand, ML, to Sandy CLAY with some silt, CL, to Silty SAND with some clay and gravel, SM; orange-brown, brown, dark brown, dark gray and gray-brown, some mottling, low to high plasticity, damp to wet, soft to stiff. (Alluvium)

Calapooya Unit-3
Sandy SILT with some clay, ML, to Silty SAND with trace gravel, SM; brown to orange-brown, nonplastic to low plasticity, moist to wet, medium stiff to stiff and loose to medium dense, fine to medium grained. (Alluvium)

Calapooya Unit-4
Silty SAND, SM, to SAND with some silt, SP-SM, to silty SAND with trace clay, SM; brown, orange-brown, gray brown, some mottling, nonplastic to low plasticity, wet, very loose to loose, fine to medium grained, has scattered zones of thin interbedded clayey silt lenses. (Alluvium)

Calapooya Unit-5
Gravelly Silty SAND, SW; to SAND with some gravel trace silt, SP; to Sandy GRAVEL with some silt, trace clay, GP; to GRAVEL with some sand, GP; brown to gray-brown, dark gray, nonplastic to low plasticity, moist to wet, very loose to medium dense, fine rounded gravel, fine to coarse sand. (Alluvium)

Calapooya Unit-6
MUDSTONE, gray, decomposed to mainly to fresh, extremely soft to mainly very soft, very close to wide jointing, some sheared zones with slickensides along joints, laminated to thick bedded, fissile along some bedding planes, some zones hand friable. (Tenmile Formation)

T.H. 14813 - 04			
Core	% Rec.	Hardness	R.Q.D.
C-1	100	R0	91
C-2	100	R0	0
C-3	100	R1	52
C-4	100	R1	0
C-5	100	R0-R1	68
C-6	100	R0-R1	47
C-7	100	R0-R1	52
C-8	100	R1	40

T.H. 14813 - 05			
Core	% Rec.	Hardness	R.Q.D.
C-1	100	R0-R1	64
C-2	100	R0	0
C-3	100	R0	0
C-4	100	R0	0
C-5	100	R0-R1	8

T.H. 14813 - 06			
Core	% Rec.	Hardness	R.Q.D.
C-1	100	R0	67
C-2	100	R0	68
C-3	100	R0-R1	32
C-4	100	R0-R1	50

T.H. 14813 - 03			
Core	% Rec.	Hardness	R.Q.D.
C-1	85	R0	0
C-2	100	R0	0
C-3	100	R0-R1	68
C-4	100	R0-R1	80
C-5	100	R1	88
C-6	100	R0	80

T.H. 14813 - 07			
Core	% Rec.	Hardness	R.Q.D.
C-1	94	R1	50
C-2	100	R1	40
C-3	100	R1	100
C-4	100	R1	92
C-5	100	R0-R1	0
C-6	92	R1	48
C-7	100	R1	80
C-8	100	R1	50
C-9	98	R1	26
C-10	96	R1	70
C-11	100	R1	68
C-12	96	R0-R1	50
C-13	100	R1	40
C-14	100	R1	90
C-15	100	R1	50

DATE	REVISION	BY

ACCOMPANIED BY DWGS.
See sheet 1

DRAFTER: Josh Lonie
REVIEWER: Wade Horaday, P.E.

GEOTECHNICAL ENGINEER: REGISTERED PROFESSIONAL ENGINEER 17603 OREGON JULY 25, 1995 PETE CASTRO — RENEWAL Dec. 31, 2011

ENGINEERING GEOLOGIST: CERTIFIED OREGON Daniel R. Rokey E1451 ENGINEERING GEOLOGIST — RENEWAL June 30, 2011

OREGON DEPARTMENT OF TRANSPORTATION
REGION 3 TECH CENTER

STRUCTURE NO. 20861
DATE August 2010
CALC. BOOK

CALAPOOYA CREEK, HWY 231
OR138W: DODGE CR/CALAPOOYA CR BRIDGE REPLACEMENTS
ELKTON-SUTHERLIN HIGHWAY (OR138) MP 22.10
DOUGLAS COUNTY

FOUNDATION DATA

SHEET 3 OF 20
DRAWING NO. 84336

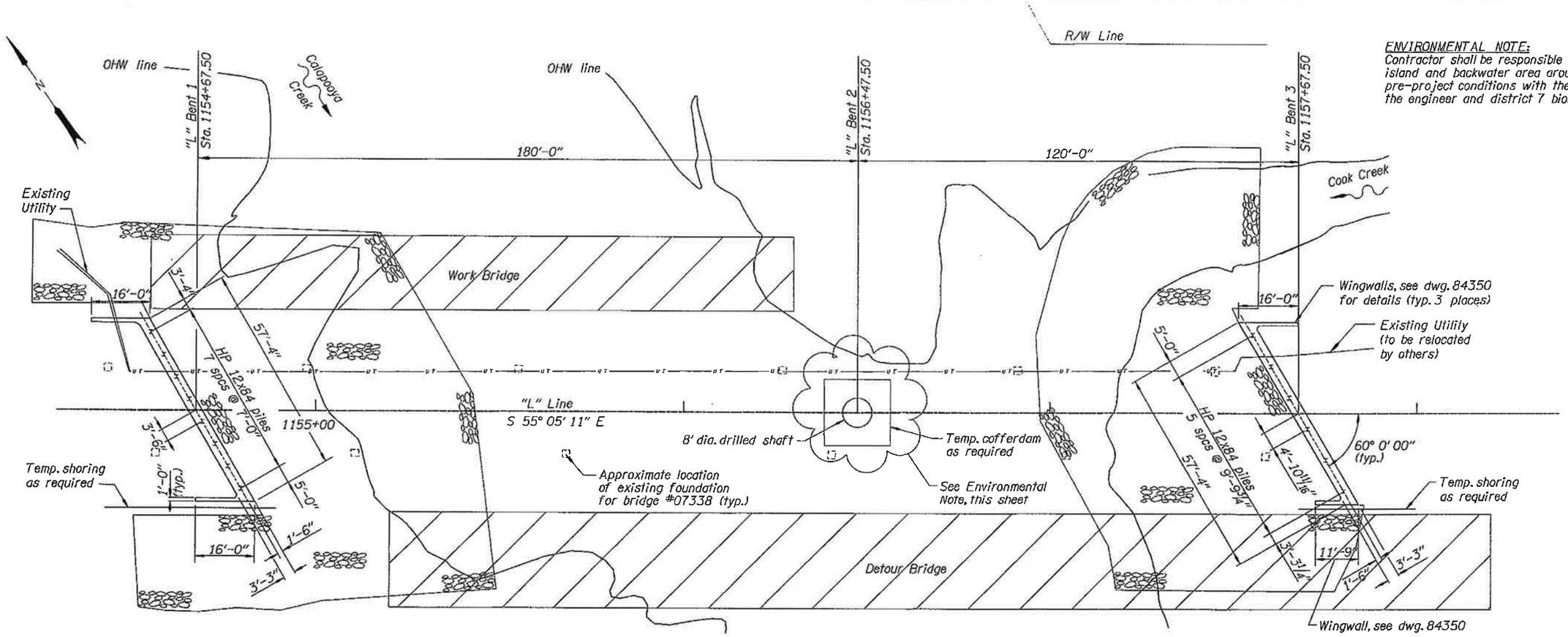

FOOTING PLAN

Scale: 1" = 15'-0"

ENVIRONMENTAL NOTE:
Contractor shall be responsible for restoring island and backwater area around Bent 2 to pre-project conditions with the guidance of the engineer and district 7 biologist.

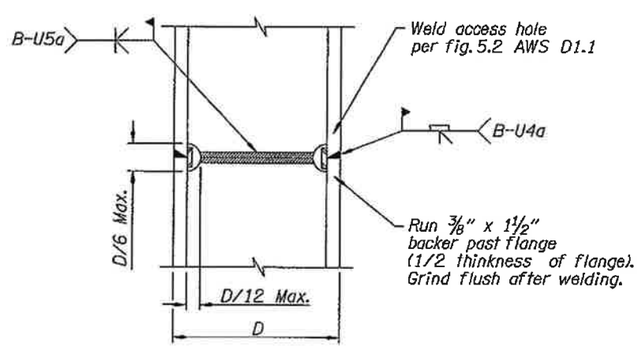

H-PILE SPLICE DETAIL

No Scale

NOTES:
Bents 1 and 3 are parallel and similar, except as shown.
Provide all shoring as required for construction. The contractor shall determine the actual location, design and limits of all shoring. The locations and limits shown are only provided to alert the contractor that shoring is anticipated.
Place piles as shown with flanges parallel to the "L" Line.
Bents 1 and 3, Provide HP12x84, ASTM A572 Grade 50 piling with reinforced tips driven to a nominal resistance of 890 kips per pile.
Pile tip elevation for minimum pile penetration at Bents 1 and 3 is 366'.
Drive all piling to the specified nominal resistance using driving criteria developed from the FHWA Gates Equation.

SCALE WARNING
If scale bar doesn't measure one inch then drawing is not to scale

△	DATE	REVISION	BY

ACCOMPANIED BY DWGS. See sheet 1 for this structure

DRAFTER: E. Leon
DESIGNER: Robert Kaspari
CHECKER: Steve Garlick
REVIEWER: R. Grubbs

STRUCTURAL REGISTERED PROFESSIONAL ENGINEER 12560 OREGON JULY 13, 1982 ROBERT V. KASPARI
RENEWS: 6/30/2010

OREGON DEPARTMENT OF TRANSPORTATION
BRIDGE ENGINEERING HEADQUARTERS
355 Capitol St NE, Rm 301
Salem, OR 97301-3871
(503) 986-4200

STRUCTURE NO. 20861
DATE August - 2010
CALC. BOOK 5743

CALAPOOYA CREEK, HWY 231
OR138W: DODGE CR/CALAPOOYA CR BRIDGE REPLACEMENTS
ELKTON-SUTHERLIN HWY 138, MP 22.10
DOUGLAS COUNTY

FOOTING PLAN

SHEET 4 OF 20
DRAWING NO. 84337

F:\ODOT_DATA\PROJECTS\14813(calapooya creek)\EJL20861L.dgn :: Default 8/10/2010 8:34:24 AM hwye03b 1:180 - 4Footing

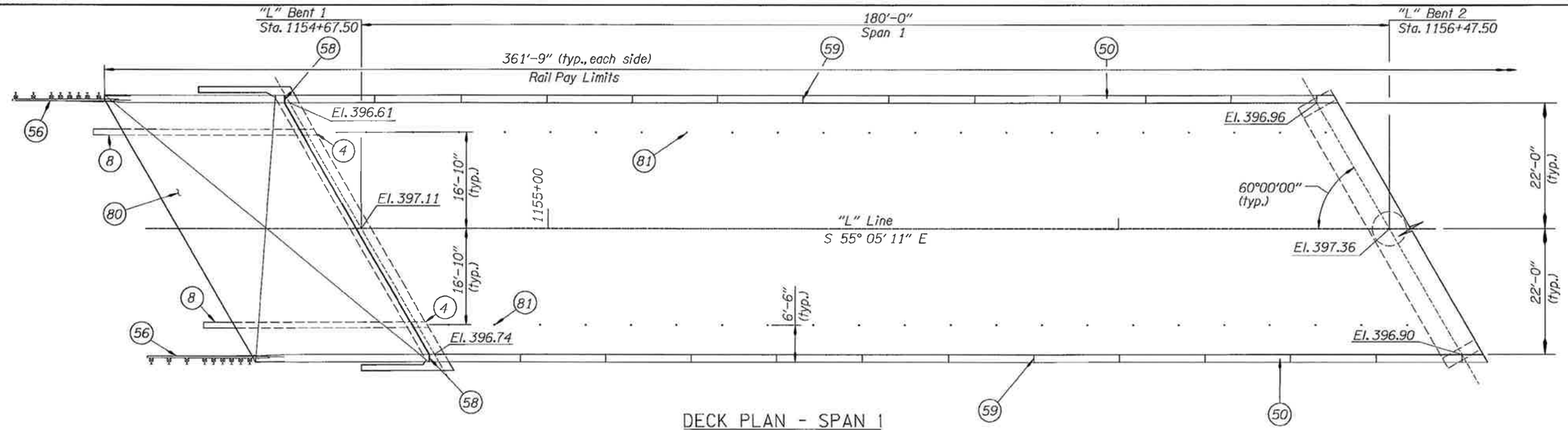

DECK PLAN - SPAN 1

Scale: 1" = 10'-0"

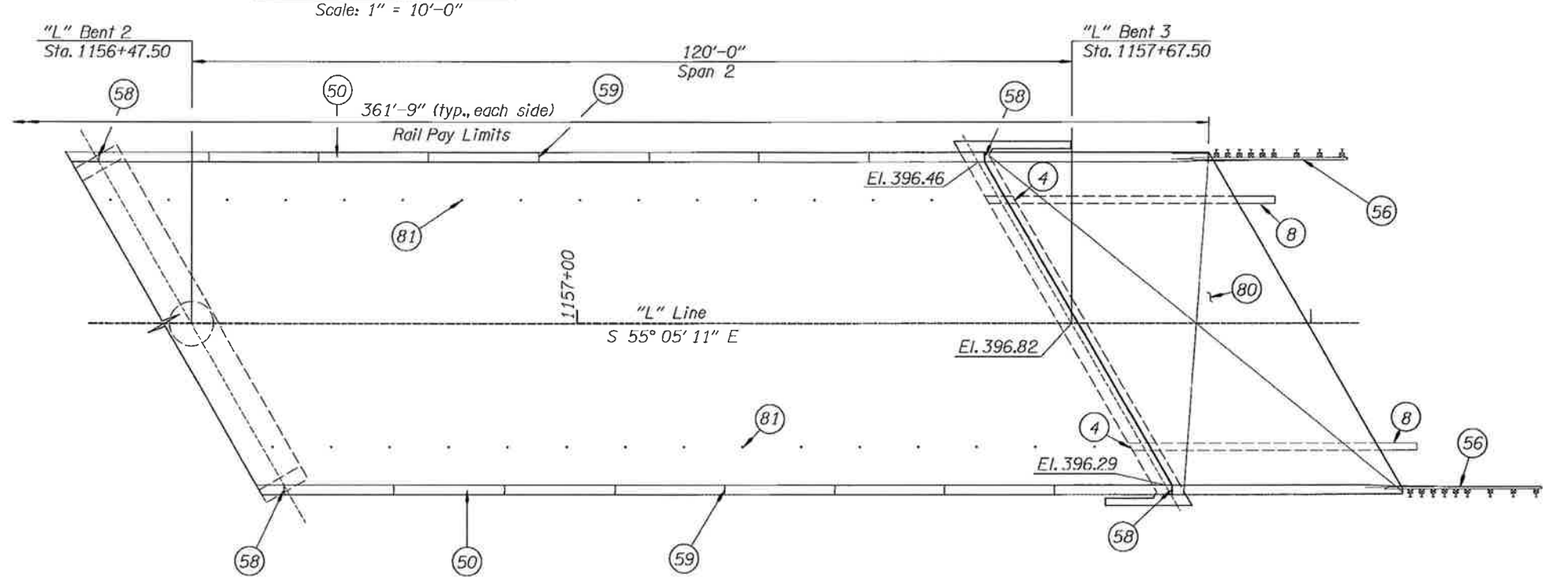

DECK PLAN - SPAN 2

Scale: 1" = 10'-0"

Note:
Deck elevations shown are finish grade at the bent centerlines where they intersect with the "L" line and face of rail.

DETAIL REFERENCE NUMBERS:

(4) –Provide 1'-2" diameter holes through end bents. See dwgs. 84348 for details. Use styrofoam for blockouts. Place #5 – 1'-4" dia. spiral x 1'-0" at each void location, with 2" pitch. Weld each end per AWS D1.4.

(8) –Place concrete culvert pipe, galvanized smooth steel pipe (1/4" min. wall thickness), or Sch. 40 PVC pipe of 12" inside Φ under RC end panel at each utility hole at both ends of bridge. Extend through hole in end bent to a point 5' minimum beyond the end of the approach panel. Contractor shall ensure hole provided in Detail 4 is of adequate size for pipe (min 1" larger Φ than pipe). When the pipe is installed, the void around the pipe should be filled with a compressible material. Pipe will be placed to follow road grade.

(50) –Standard concrete bridge rail, Type "F", see dwg. BR200 for details.

(56) –Standard guardrail transition, see dwg. BR203 for details.

(58) –Place Type "B" joints through rail at Bents 1, 2, and 3, see dwg. BR200 for details.

(59) –Place 1/4" x 1 1/2" scoring joint at equal spaces, (15'-0" max.) between Type "B" joints, see dwg. BR200 for details.

(80) –Standard 30'-4" bridge end panel at bridge ends, see dwg. BR165 for details.

(81) –Provide hot-dip galvanized expanded coil concrete inserts with closed-back ferrule, threaded for 3/4" Φ bolts installed in the deck at 10' max. centers above each line of utility holes (min. insert length 5 1/2", min. safe working load in tension 6000 lbs.). Install short galvanized bolts in the inserts to prevent rusting of the threads, if the inserts are not to be used immediately.

SCALE WARNING
If scale bar doesn't measure one inch then drawing is not to scale

DATE	REVISION	BY

ACCOMPANIED BY DWGS. See sheet 1 for this structure

DRAFTER: E. Leon
DESIGNER: Robert Kaspari
CHECKER: Steve Garlick
REVIEWER: R. Grubbs

STRUCTURAL REGISTERED PROFESSIONAL ENGINEER 12560 OREGON JULY 13, 1984 ROBERT V. KASPARI
RENEWS: 6/30/2010

OREGON DEPARTMENT OF TRANSPORTATION
BRIDGE ENGINEERING HEADQUARTERS
355 Capitol St NE, Rm 301
Salem, OR 97301-3871
(503) 986-4200

STRUCTURE NO. 20861
DATE August - 2010
CALC. BOOK 5743

CALAPOOYA CREEK, HWY 231
OR138W: DODGE CR/CALAPOOYA CR BRIDGE REPLACEMENTS
ELKTON-SUTHERLIN HWY 138, MP 22.10
DOUGLAS COUNTY

DECK PLAN

SHEET 5 OF 20
DRAWING NO. 84338

F:\ODOT_DATA\PROJECTS\14813(calapooya creek)\EJL20861L.dgn :: Default 8/10/2010 11:48:18 AM hwye03b 1:120- 5Deckplan

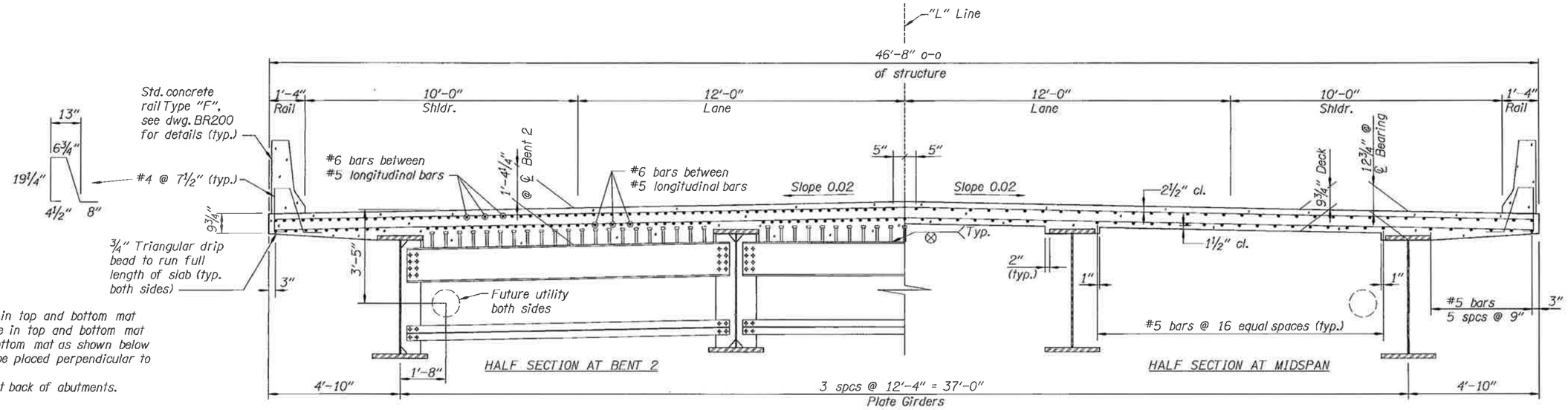

DECK REINFORCING:
#5 @ 8" Longitudinal in top and bottom mat
#5 @ 5½" Transverse in top and bottom mat
Longitudinal bars in bottom mat as shown below
Transverse bars shall be placed perpendicular to roadway centerline.
Cut bars as required at back of abutments.

DECK REINFORCING (over bent 2):
#6 bars between #5 bars Longitudinal in top mat
#6 bars between #5 bars Longitudinal in bottom mat

TYPICAL DECK SECTION

Scale: ½" = 1'-0"

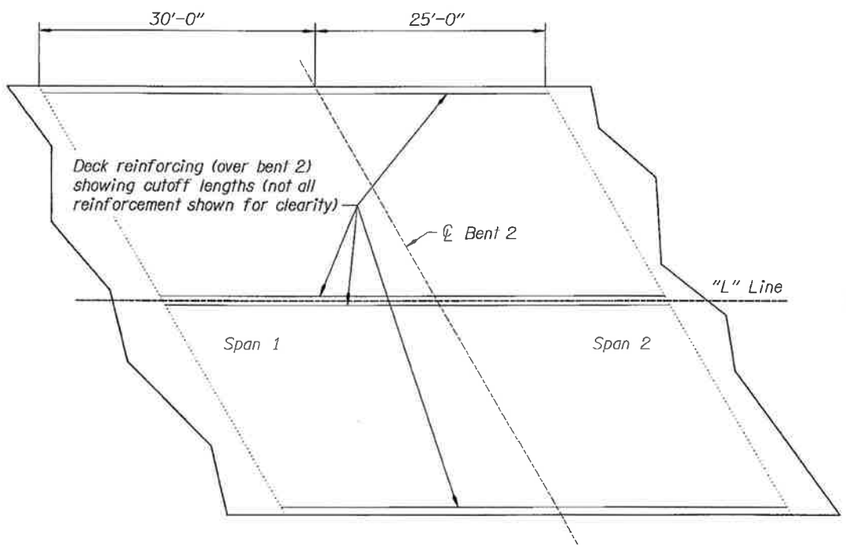

DECK REINFORCING (over Bent 2)

No Scale

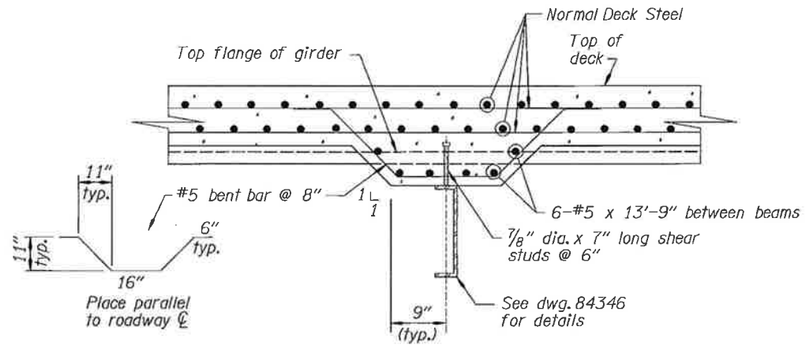

Note: Only thicken deck between beams, not at overhang locations.

TYPICAL THICKENED DECK AT BENT 2

Scale: 1" = 1'-0"

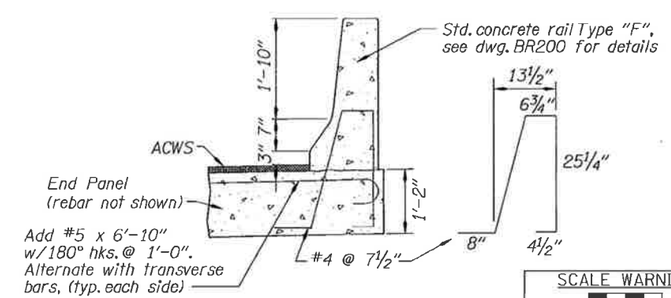

RAIL DETAILS ON END PANEL

Scale: ¾" = 1'-0"

SCALE WARNING

If scale bar doesn't measure one inch then drawing is not to scale

DATE	REVISION	BY

ACCOMPANIED BY DWGS. See sheet 1 for this structure

DRAFTER: E. Leon
DESIGNER: Robert Kaspari
CHECKER: Steve Garlick
REVIEWER: R. Grubbs

STRUCTURAL REGISTERED PROFESSIONAL ENGINEER 12560 OREGON JULY 15, 1994 ROBERT V. KASPARI
RENEWS: 6/30/2010

OREGON DEPARTMENT OF TRANSPORTATION
BRIDGE ENGINEERING HEADQUARTERS
355 Capitol St NE, Rm 301
Salem, OR 97301-3871
(503) 986-4200

STRUCTURE NO. 20861
DATE August - 2010
CALC. BOOK 5743

CALAPOOYA CREEK, HWY 231
OR138W: DODGE CR/CALAPOOYA CR BRIDGE REPLACEMENTS
ELKTON-SUTHERLIN HWY 138, MP 22.10
DOUGLAS COUNTY

TYPICAL DECK SECTION

SHEET 6 OF 20
DRAWING NO. 84339

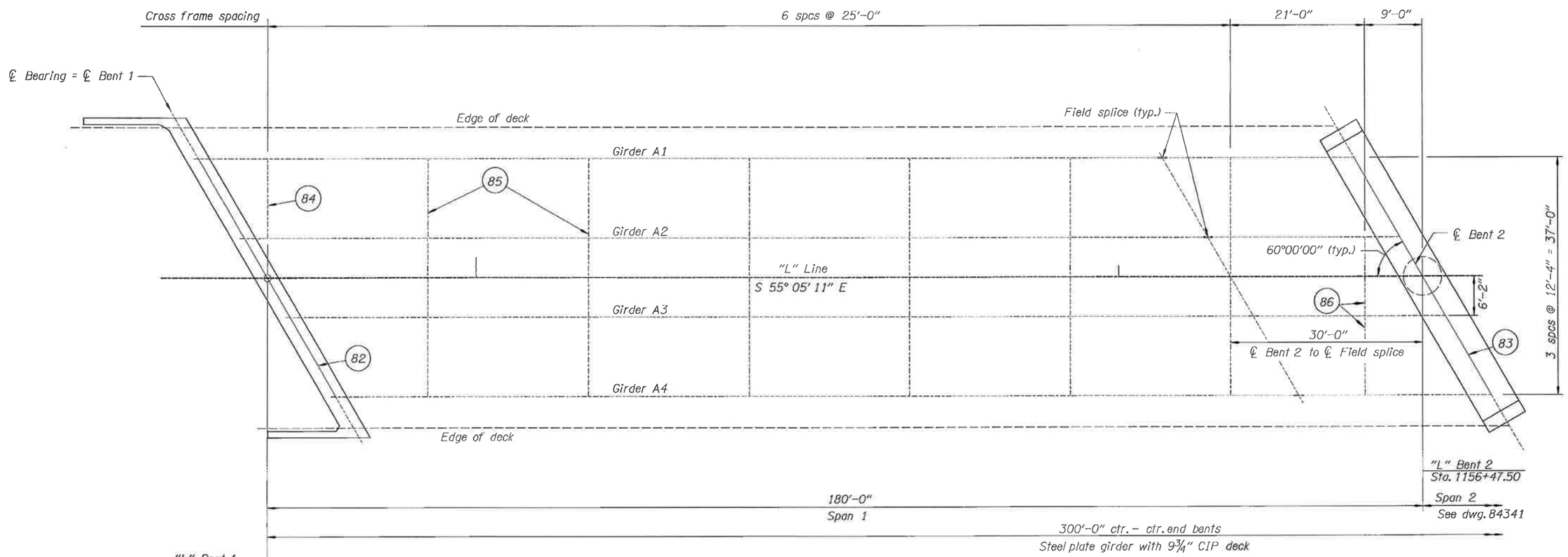

FRAMING PLAN: Span 1

Scale: 1/8" = 1'-0"

DETAIL REFERENCE NUMBERS:

(82) – End Cross Frame, see dwg. 84346 for details

(83) – Bent 2 Cross Frame, see dwg. 84346 for details

(84) – Partial Cross Frame A, see dwg. 84346 for details

(85) – Intermediate Cross Frame, see dwg. 84347 for details

(86) – Partial Cross Frame B, see dwg. 84347 for details

SCALE WARNING

If scale bar doesn't measure one inch then drawing is not to scale

DATE	REVISION	BY

ACCOMPANIED BY DWGS. See sheet 1 for this structure

DRAFTER: E. Leon
DESIGNER: Robert Kaspari
CHECKER: Steve Garlick
REVIEWER: R. Grubbs

STRUCTURAL REGISTERED PROFESSIONAL ENGINEER 12560 OREGON JULY 13, 1984 ROBERT V. KASPARI
RENEWS: 6/30/2010

OREGON DEPARTMENT OF TRANSPORTATION
BRIDGE ENGINEERING HEADQUARTERS
355 Capitol St NE, Rm 301
Salem, OR 97301-3871
(503) 986-4200

STRUCTURE NO. 20861
DATE August - 2010
CALC. BOOK 5743

CALAPOOYA CREEK, HWY 231
OR138W: DODGE CR/CALAPOOYA CR BRIDGE REPLACEMENTS
ELKTON-SUTHERLIN HWY 138, MP 22.10
DOUGLAS COUNTY

FRAMING PLAN - SPAN 1

SHEET 7 OF 20
DRAWING NO. 84340

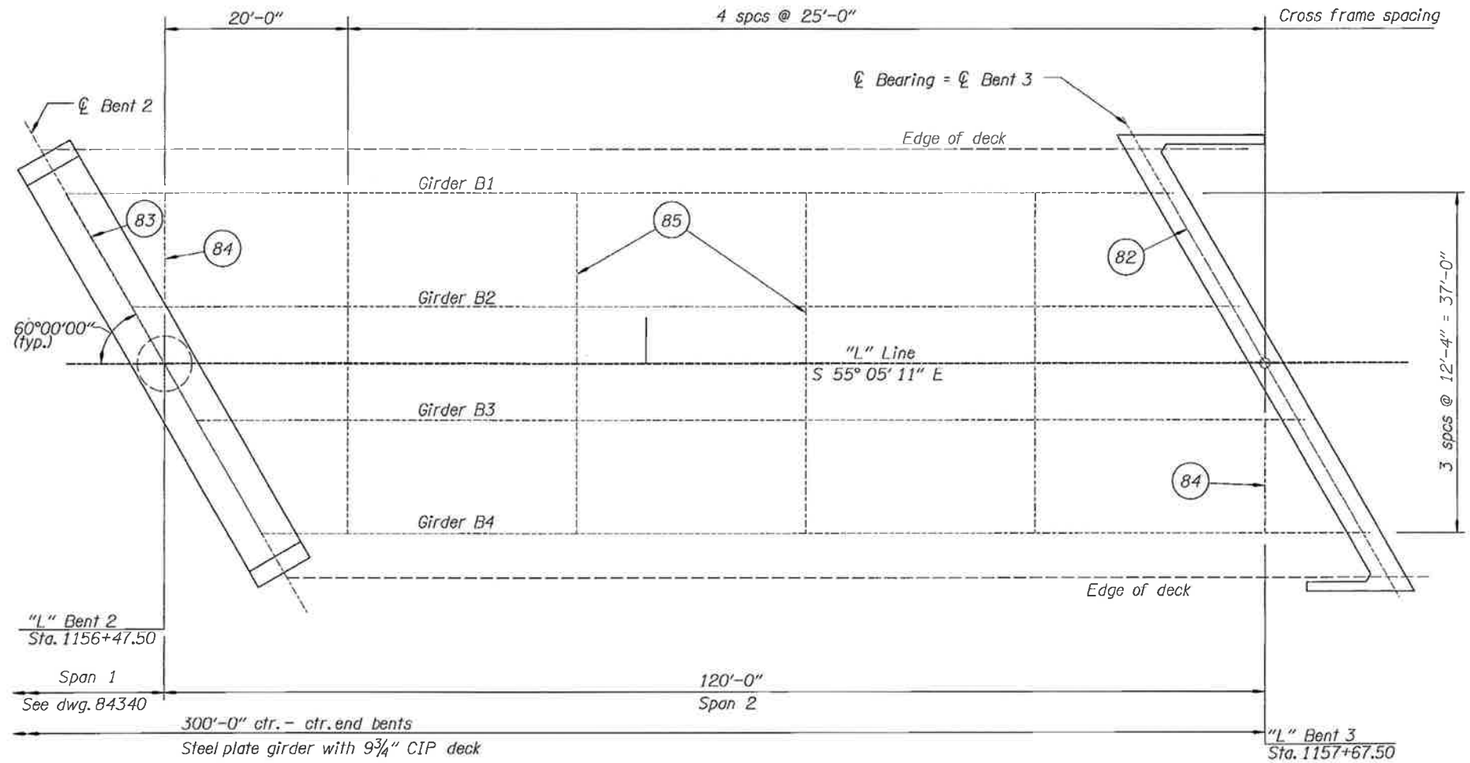

FRAMING PLAN: Span 2

Scale: 1/8" = 1'-0"

Note:
See dwg. 84340 for detail reference numbers

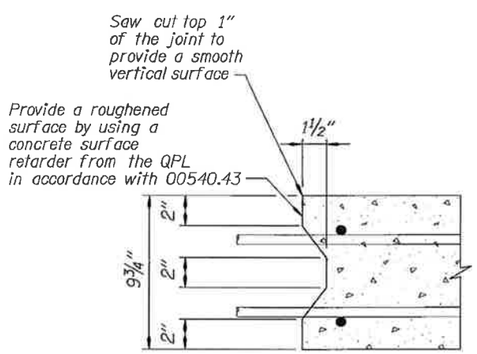

DECK CONSTRUCTION JOINT

No Scale

SCALE WARNING

If scale bar doesn't measure one inch then drawing is not to scale

DATE	REVISION	BY

ACCOMPANIED BY DWGS. See sheet 1 for this structure

DRAFTER: F. Leon
DESIGNER: Robert Kaspari
CHECKER: Steve Garlick
REVIEWER: R. Grubbs

STRUCTURAL REGISTERED PROFESSIONAL ENGINEER 12560 OREGON JULY 13, 1984 ROBERT V. KASPARI
RENEWS: 6/30/2010

OREGON DEPARTMENT OF TRANSPORTATION
BRIDGE ENGINEERING HEADQUARTERS
355 Capitol St NE, Rm 301
Salem, OR 97301-3871
(503) 986-4200

STRUCTURE NO. 20861
DATE August - 2010
CALC. BOOK 5743

CALAPOOYA CREEK, HWY 231
OR138W: DODGE CR/CALAPOOYA CR BRIDGE REPLACEMENTS
ELKTON-SUTHERLIN HWY 138, MP 22.10
DOUGLAS COUNT

FRAMING PLAN - SPAN 2

SHEET 8 OF 20
DRAWING NO. 84341

F:\ODOT_DATA\PROJECTS\14813(calapooya creek)\EJL20861L.dgn :: Default 8/10/2010 8:51:56 AM hwye03b 1:96 - 8Frame 2

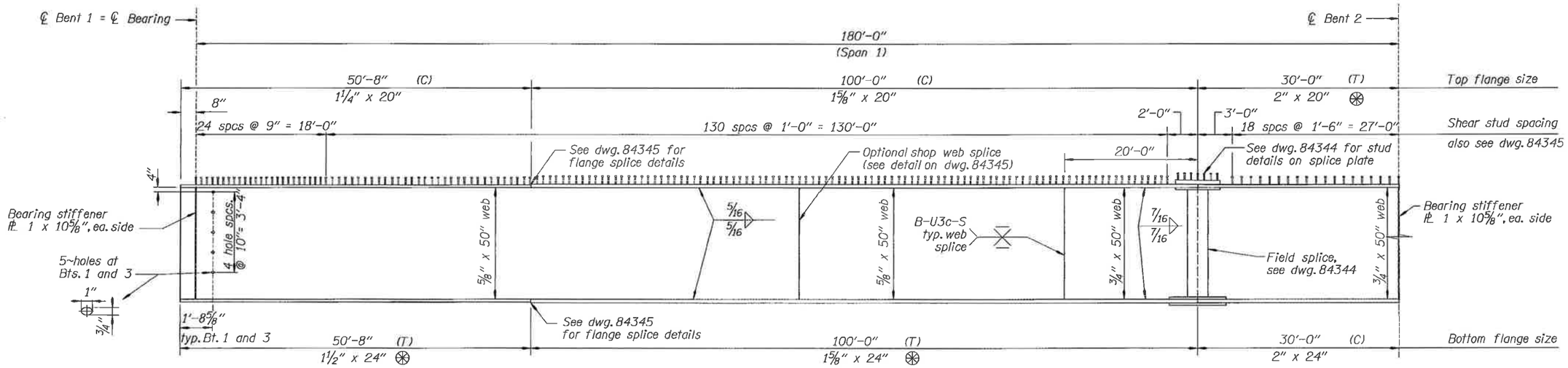

ELEVATION: Span 1 Girder

No Scale

(T) Denotes Tension

(C) Denotes Compression

⊛ Indicates check sample required from flange plates so marked, see Standard Specifications Section 00560.22(c).

Notes:
See Framing Plan dwgs. 84340 and 84341 for cross frame spacing.

See dwg. 84343 for Span 2 Steel Girder details.

BEAM CAMBER											
SPAN NO.	ITEM	CAMBER (in)									H (in)
		0.1	0.2	0.3	0.4	0.5	0.6	0.7	0.8	0.9	
1	Grade Line	11/16	1 1/4	1 5/8	1 7/8	1 15/16	1 7/8	1 5/8	1 1/4	11/16	3
	Beam Dead Load	15/16	1 11/16	2 1/4	2 1/2	2 1/2	2 3/16	1 11/16	1 1/16	1/2	
	Deck Dead Load	4 7/16	8 1/4	10 13/16	12 1/16	11 15/16	10 1/2	8 1/8	5 1/8	2 1/4	
	Rail Dead Load	1/4	7/16	9/16	5/8	5/8	9/16	7/16	5/16	1/8	
	Shrinkage	7/16	11/16	13/16	13/16	11/16	9/16	3/8	3/16	1/16	
	Total	6 3/4	12 5/16	16 1/8	17 15/16	17 3/4	15 3/4	12 5/16	8	3 5/8	

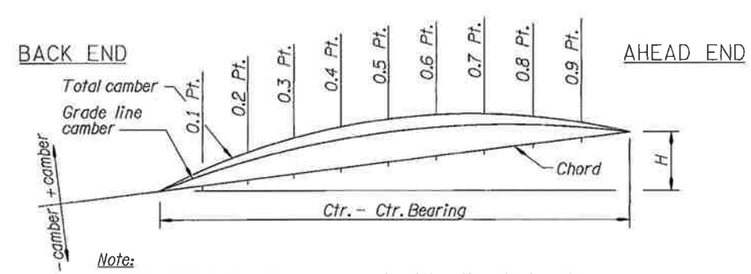

Note:
Positive H indicates the ahead end is higher than back end.
50% of shrinkage camber occurs prior to the concrete bridge rail pour.

CAMBER DIAGRAM

No Scale

SCALE WARNING
If scale bar doesn't measure one inch then drawing is not to scale

DATE	REVISION	BY

ACCOMPANIED BY DWGS. See sheet 1 for this structure

DRAFTER: E. Leon
DESIGNER: Robert Kaspari
CHECKER: Steve Garlick
REVIEWER: R. Grubbs

STRUCTURAL REGISTERED PROFESSIONAL ENGINEER 12560 OREGON JULY 13, 1984 ROBERT V. KASPARI
RENEWS: 6/30/2011

OREGON DEPARTMENT OF TRANSPORTATION
BRIDGE ENGINEERING HEADQUARTERS
355 Capitol St NE, Rm 301
Salem, OR 97301-3871
(503) 986-4200

STRUCTURE NO. 20861
DATE August - 2010
CALC. BOOK 5743

CALAPOOYA CREEK, HWY 231
OR138W: DODGE CR/CALAPOOYA CR BRIDGE REPLACEMENTS
ELKTON-SUTHERLIN HWY 138, MP 22.10
DOUGLAS COUNTY

STEEL GIRDER - SPAN 1

SHEET 9 OF 20
DRAWING NO. 84342

F:\ODOT_DATA\PROJECTS\14813(calapooya creek)\EJL20861L.dgn :: Default 9/8/2010 3:56:18 PM hwye03b 1:48 - 9Girder 1

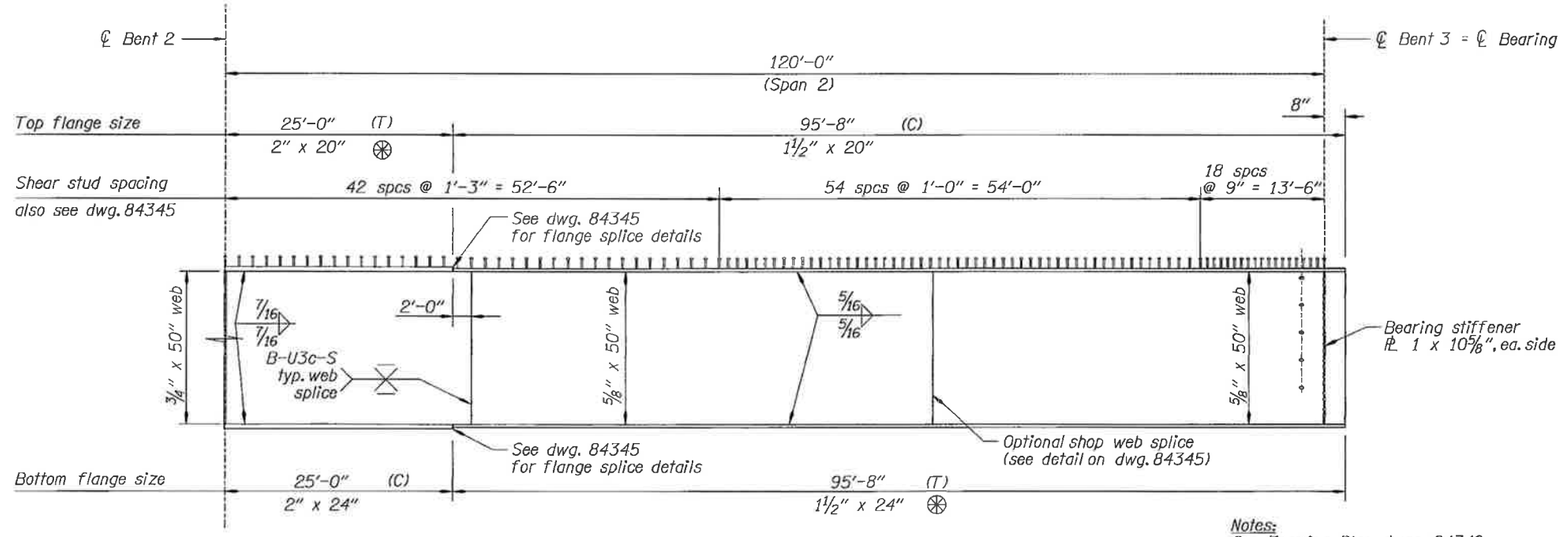

ELEVATION: Span 2 Girder

No Scale

Notes:
See Framing Plan dwgs. 84340 and 84341 for cross frame spacing.

See dwg. 84342 for Span 1 Steel Girder details.

(T) Denotes Tension

(C) Denotes Compression

⊛ Indicates check sample required from flange plates so marked, see Standard Specifications Section 00560.22(c).

BEAM CAMBER

SPAN NO.	ITEM	CAMBER (in) 0.1	0.2	0.3	0.4	0.5	0.6	0.7	0.8	0.9	H (in)
2	Grade Line	5/16	9/16	3/4	13/16	7/8	13/16	11/16	1/2	5/16	-6½
	Beam Dead Load	-3/16	-1/4	-3/16	-3/16	-1/16	0	0	1/16	1/16	
	Deck Dead Load	-13/16	-1 1/16	-1	-3/4	-1/2	-1/8	0	3/16	1/8	
	Rail Dead Load	0	-1/16	0	0	0	0	0	0	0	
	Shrinkage	0	1/16	3/16	1/4	5/16	3/8	3/8	5/16	3/16	
	Total	-11/16	-11/16	-3/8	1/8	5/8	1 1/16	1 1/8	1 1/16	11/16	

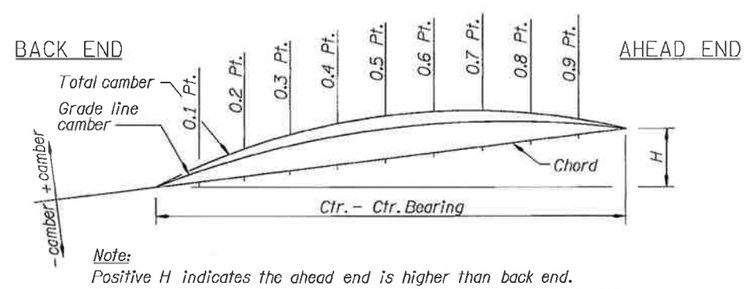

Note:
Positive H indicates the ahead end is higher than back end.
50% of shrinkage camber occurs prior to the concrete bridge rail pour.

CAMBER DIAGRAM

No Scale

SCALE WARNING
If scale bar doesn't measure one inch then drawing is not to scale

DATE	REVISION	BY

ACCOMPANIED BY DWGS. See sheet 1 for this structure

DRAFTER: E. Leon
DESIGNER: Robert Kaspari
CHECKER: Steve Garlick
REVIEWER: R. Grubbs

STRUCTURAL REGISTERED PROFESSIONAL ENGINEER 12560 OREGON JULY 13, 1994 ROBERT V. KASPARI

RENEWS: 6/30/2011

OREGON DEPARTMENT OF TRANSPORTATION
BRIDGE ENGINEERING HEADQUARTERS
355 Capitol St NE, Rm 301
Salem, OR 97301-3871
(503) 986-4200

STRUCTURE NO. 20861
DATE August - 2010
CALC. BOOK 5743

CALAPOOYA CREEK, HWY 231
OR138W: DODGE CR/CALAPOOYA CR BRIDGE REPLACEMENTS
ELKTON-SUTHERLIN HWY 138, MP 22.10
DOUGLAS COUNTY

STEEL GIRDER - SPAN 2

SHEET 10 OF 20
DRAWING NO. 84343

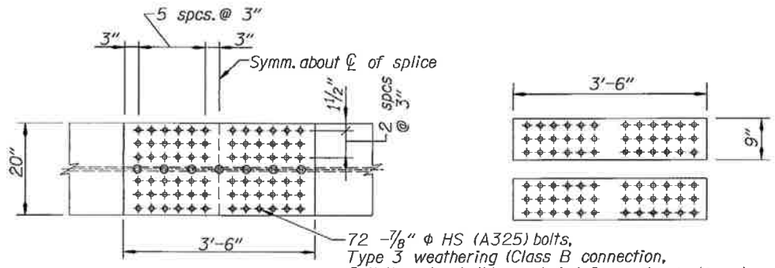

TOP FLANGE PLAN

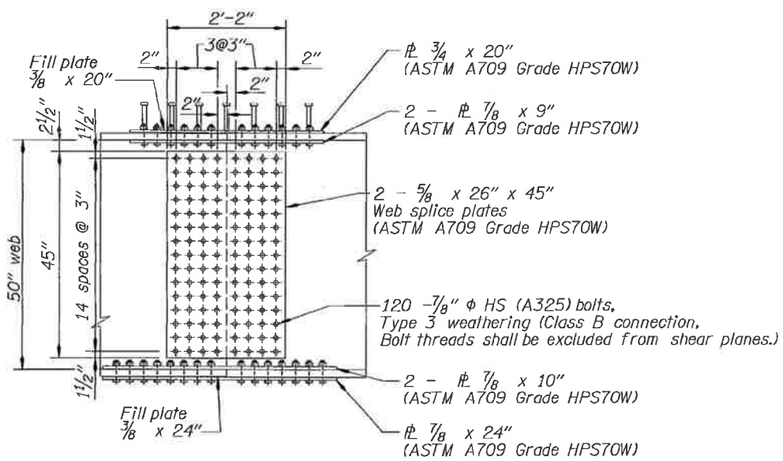

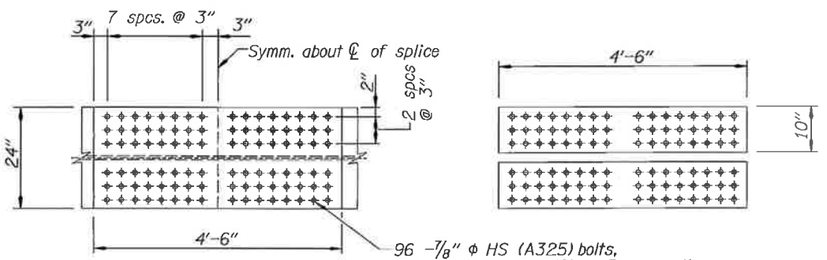

BOTTOM FLANGE PLAN

FIELD SPLICE DETAILS

No Scale

Note:
See dwg. 84340 and
84342 for splice location.

NOTES:

All longitudinal dimensions are on a horizontal line - adjust for superelevation and grade.
All stiffeners and beam ends are to be vertical in final erected position.
Web thickness shown may be increased up to 1/16", at no additional cost to the State.
Additional compression flange weld splices will be permitted at locations approved by the engineer.
Structural steel shall conform to ASTM A709 (AASHTO M270) Grade HPS70W, unless noted otherwise.
For the purpose of charpy toughness testing and welding inspection/repair, etc., main load carrying members are Beams A1-A4, B1-B4.

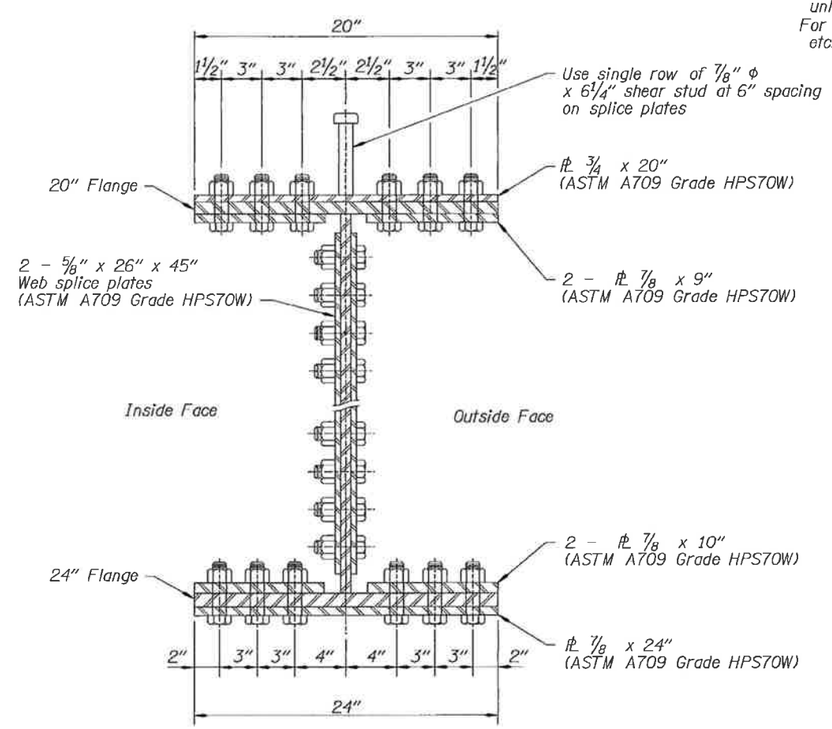

FIELD SPLICE SECTION

No Scale

SCALE WARNING

If scale bar doesn't measure one inch then drawing is not to scale

	DATE	REVISION	BY

ACCOMPANIED BY DWGS. See sheet 1 for this structure

DRAFTER: E. Leon
DESIGNER: Robert Kaspari
CHECKER: Steve Garlick
REVIEWER: R. Grubbs

STRUCTURAL REGISTERED PROFESSIONAL ENGINEER 12560 OREGON JULY 13, 1984 ROBERT V. KASPARI
RENEWS: 6/30/2011

OREGON DEPARTMENT OF TRANSPORTATION
BRIDGE ENGINEERING HEADQUARTERS
355 Capitol St NE, Rm 301
Salem, OR 97301-3871
(503) 986-4200

STRUCTURE NO. 20861
DATE August - 2010
CALC. BOOK 5743

CALAPOOYA CREEK, HWY 231
OR138W: DODGE CR/CALAPOOYA CR BRIDGE REPLACEMENTS
ELKTON-SUTHERLIN HWY 138, MP 22.10
DOUGLAS COUNTY

STEEL GIRDER SPLICE

SHEET 11 OF 20
DRAWING NO. 84344

F:\ODOT_DATA\PROJECTS\14813(calapooya creek)\EJL20861L.dgn :: Default 9/8/2010 3:56:31 PM hwye03b 1:16 - 11Splice

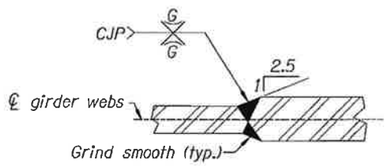

UNEQUAL THICKNESS WEBS

SHOP WEB SPLICES

No Scale

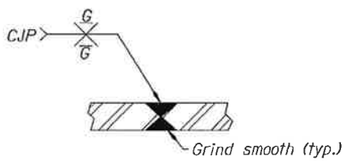

COMPRESSION FLANGE SPLICE OR WEB OF EQUAL THICKNESS

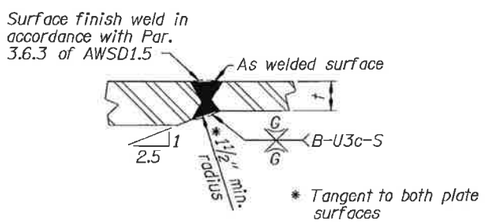

FLANGE SPLICE

SHOP FLANGE SPLICES

No Scale

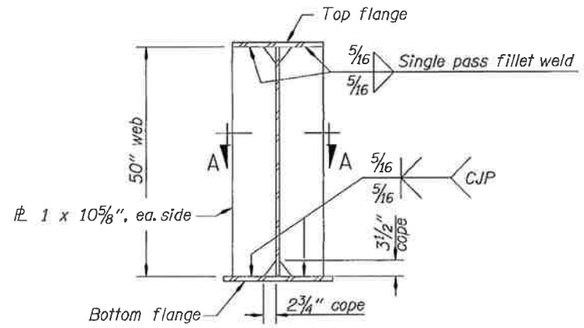

BEARING STIFFENER (BENTS 1, 2 & 3)

No Scale

Note: Bearing stiffeners are located along the skew.

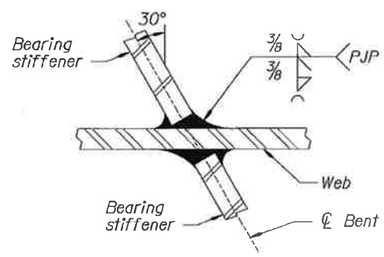

SECTION A-A

No Scale

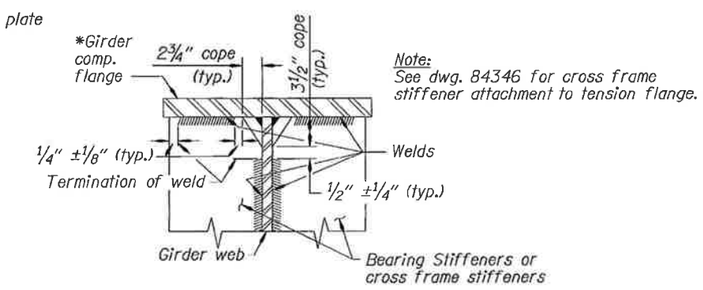

Note:
See dwg. 84346 for cross frame stiffener attachment to tension flange.

WELD TERMINATION DETAIL

No Scale

Note - A:
Use ASTM A706 for all welded splices, except ASTM A615 Grade 60, ASTM A82 or ASTM A496 may be used if copies of the chemical composition analysis are submitted and approved as weldable by the Engineer. Anchor spirals at each end or discontinuity with one extra turn and a splice to itself as shown. Where permitted on plans, provide closed hoops conforming to the requirements of this detail. Lapped splice is not allowed within 1/6 the column height or max. column cross sectional dimension or 18" from top of footing or bottom of cap beam, or in columns with spirals less than 3'-0" in diameter.

Note: Make flare weld in direction shown.

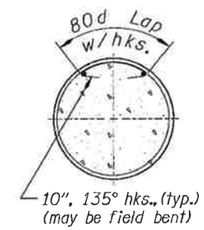

LAPPED SPLICE
See Note A

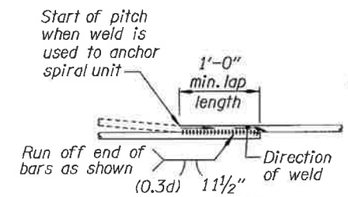

WELDED SPLICE
See Note A

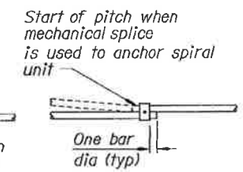

MECHANICAL SPLICE
(Not allowed for ASTM A82 spirals)

SPIRAL SPLICE / TERMINATION DETAIL

No Scale

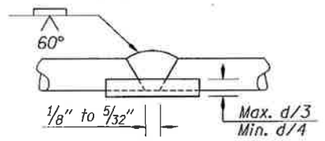

ALTERNATE WELDED SPLICE

(Except ASTM A82)

Weld reinforcing steel splices in accordance with the current edition of ANSI/AWS D1.4. "Structural Welding Code Reinforcing Steel"

No Scale

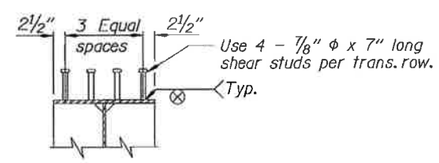

SHEAR STUD DETAIL

No Scale

SCALE WARNING
If scale bar doesn't measure one inch then drawing is not to scale

	DATE	REVISION	BY

ACCOMPANIED BY DWGS. See sheet 1 for this structure

DRAFTER: E. Leon
DESIGNER: Robert Kaspari
CHECKER: Steve Garlick
REVIEWER: R. Grubbs

STRUCTURAL REGISTERED PROFESSIONAL ENGINEER 12560 OREGON JULY 13, 1984 ROBERT V. KASPARI
RENEWS: 6/30/2011

OREGON DEPARTMENT OF TRANSPORTATION
BRIDGE ENGINEERING HEADQUARTERS
355 Capitol St NE, Rm 301
Salem, OR 97301-3871
(503) 986-4200

STRUCTURE NO. 20861
DATE August - 2010
CALC. BOOK 5743

CALAPOOYA CREEK, HWY 231
OR138W: DODGE CR/CALAPOOYA CR BRIDGE REPLACEMENTS
ELKTON-SUTHERLIN HWY 138, MP 22.10
DOUGLAS COUNTY

WELDING DETAILS

SHEET 12 OF 20
DRAWING NO. 84345

F:\ODOT_DATA\PROJECTS\14813(calapooya creek)\EJL20861L.dgn :: Default 9/8/2010 3:56:38 PM hwye03b 1:16 - 12Welds

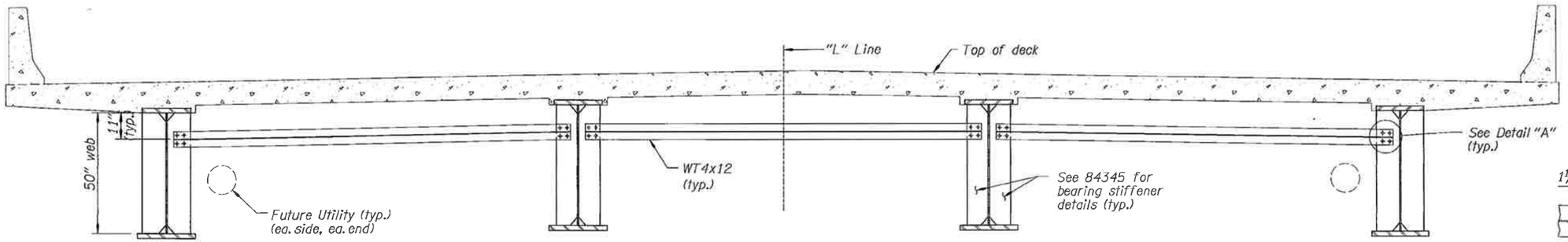

(82) END CROSS FRAME DETAILS
(2 Places) (Bents 1 and 3)
Scale: 1/2" = 1'-0"

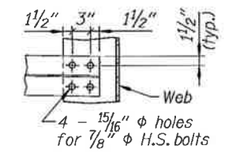

DETAIL "A"
No Scale

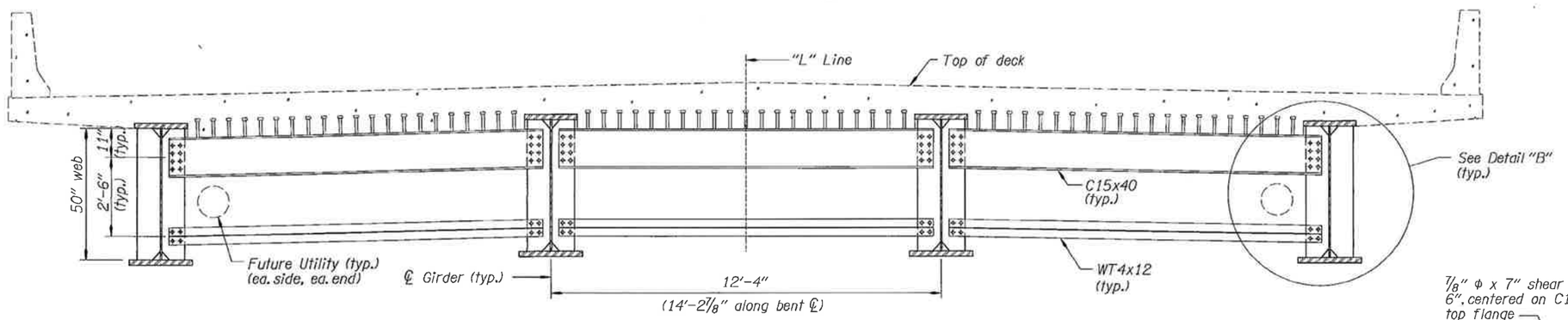

(83) BENT 2 CROSS FRAME DETAILS
(1 Place) Scale: 1/2" = 1'-0"

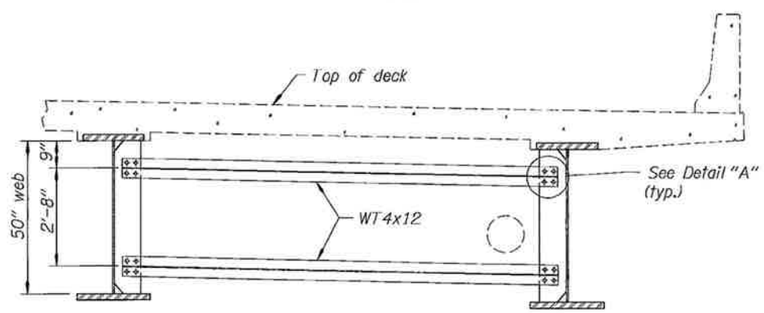

(84) PARTIAL CROSS FRAME A
(3 Places) Scale: 1/2" = 1'-0"

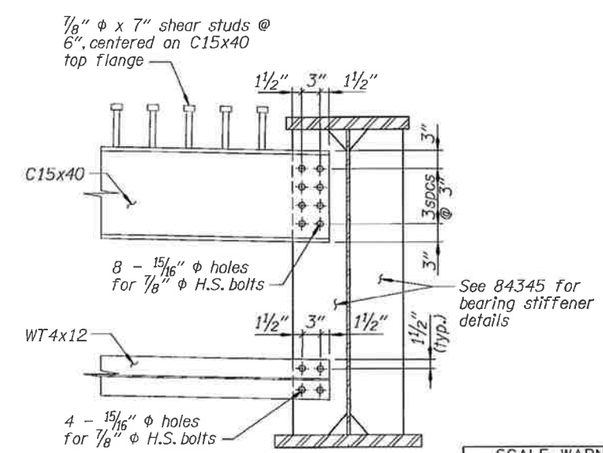

DETAIL "B"
No Scale

Note:
See dwg. 84347 for notes.

SCALE WARNING
If scale bar doesn't measure one inch then drawing is not to scale

	DATE	REVISION	BY

ACCOMPANIED BY DWGS. See sheet 1 for this structure

DRAFTER: E. Leon
DESIGNER: Robert Kaspari
CHECKER: Steve Garlick
REVIEWER: R. Grubbs

STRUCTURAL REGISTERED PROFESSIONAL ENGINEER 12560 OREGON JULY 13, 1984 ROBERT V. KASPARI
RENEWS: 6/30/2010

OREGON DEPARTMENT OF TRANSPORTATION
BRIDGE ENGINEERING HEADQUARTERS
355 Capitol St NE, Rm 301
Salem, OR 97301-3871
(503) 986-4200

STRUCTURE NO. 20861
DATE Jan. - 2010
CALC. BOOK 5743

CALAPOOYA CREEK, HWY 231
OR138W: DODGE CR/CALAPOOYA CR BRIDGE REPLACEMENTS
ELKTON-SUTHERLIN HWY 138, MP 22.10
DOUGLAS COUNTY

BENT CROSS FRAMES

SHEET 13 OF 20
DRAWING NO. 84346

F:\ODOT_DATA\PROJECTS\14813(calapooya creek)\EJL20861L.dgn :: Default 8/10/2010 8:44:08 AM hwye03b 1:24 - 13frame2

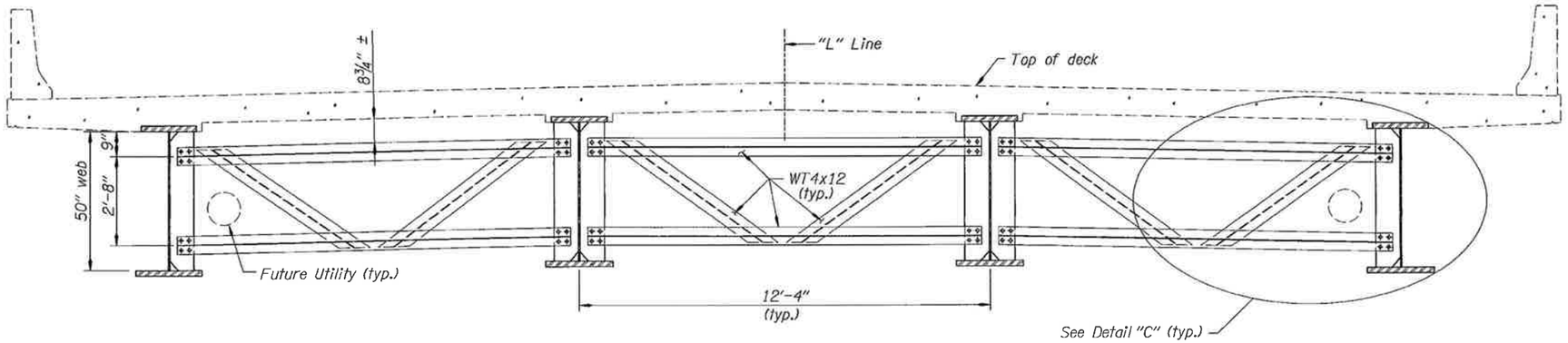

(85) INTERMEDIATE CROSS FRAME
(10 Places) Scale: ½" = 1'-0"

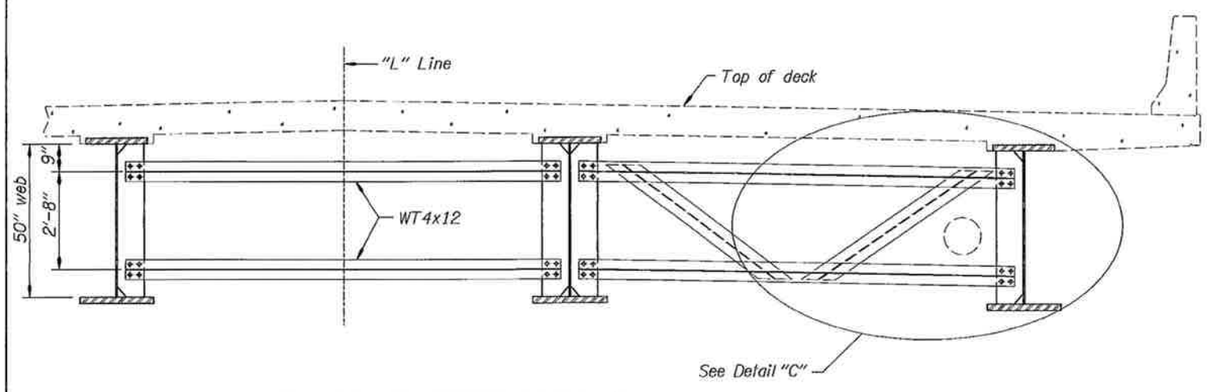

(86) PARTIAL CROSS FRAME B
(1 Place) Scale: ½" = 1'-0"

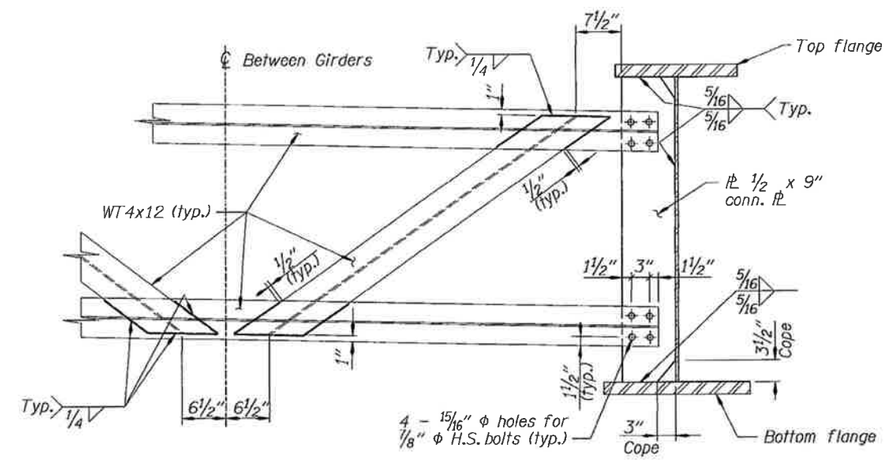

DETAIL "C"
No Scale

Notes:
Structural steel in cross frames shall conform to ASTM A709 (AASHTO M270) Grade 50W unless noted otherwise.
See dwgs. 84342 and 84343 for location of Tension (T) and Compression (C) flanges.
Steel to steel contact surfaces shall be cleaned and coated on welded connections prior to bolting per specifications.
Stop all fillet welds ±¼" clear from end of plate, unless noted otherwise.
Seal all weld terminations and unwelded connections of cross frames with structural steel caulking from the QPL.

SCALE WARNING
If scale bar doesn't measure one inch then drawing is not to scale

DATE	REVISION	BY

ACCOMPANIED BY DWGS. See sheet 1 for this structure

DRAFTER: E. Leon
DESIGNER: Robert Kaspari
CHECKER: Steve Garlick
REVIEWER: R. Grubbs

STRUCTURAL REGISTERED PROFESSIONAL ENGINEER 12560 OREGON JULY 13, 1994 ROBERT V. KASPARI
RENEWS: 6/30/2011

OREGON DEPARTMENT OF TRANSPORTATION
BRIDGE ENGINEERING HEADQUARTERS
355 Capitol St NE, Rm 301
Salem, OR 97301-3871
(503) 986-4200

STRUCTURE NO. 20861
DATE August - 2010
CALC. BOOK 5743

CALAPOOYA CREEK, HWY 231
OR138W: DODGE CR/CALAPOOYA CR BRIDGE REPLACEMENTS
ELKTON-SUTHERLIN HWY 138, MP 22.10
DOUGLAS COUNTY

INTERMEDIATE CROSS FRAME

SHEET 14 OF 20
DRAWING NO. 84347

F:\ODOT_DATA\PROJECTS\14813(calapooya creek)\EJL20861L.dgn :: Default 9/8/2010 3:56:51 PM hwye03b 1:24 - 14Xframe

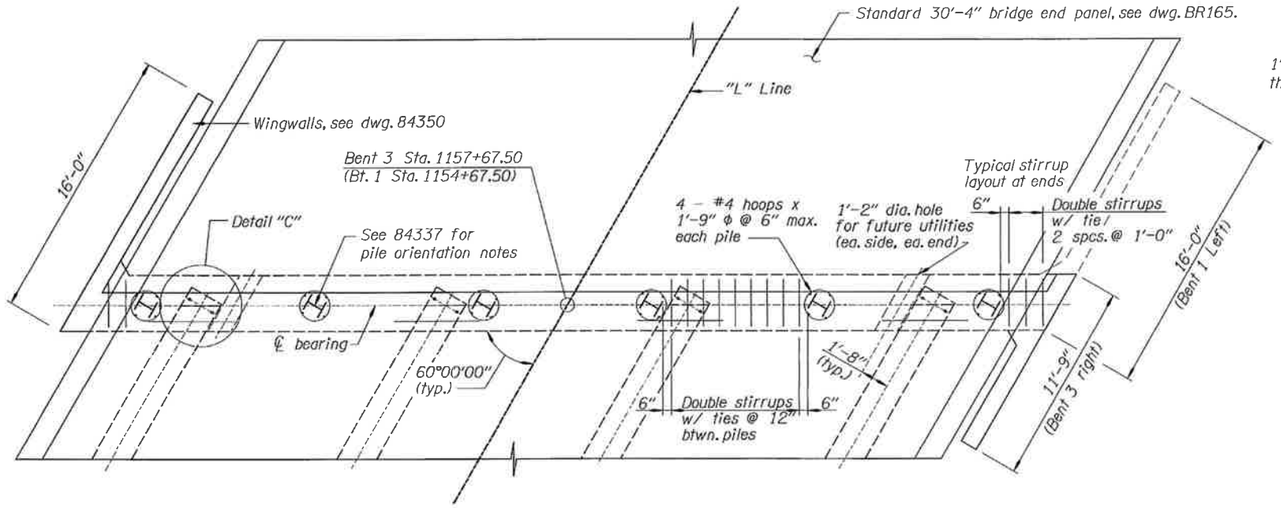

BENT 3: PLAN

Scale: 1/4" = 1'-0"

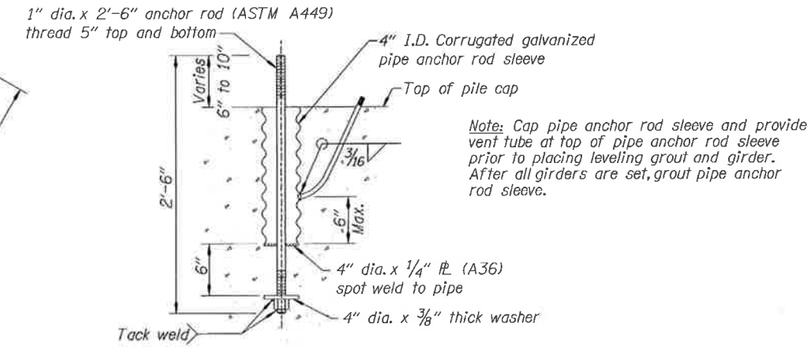

Note: Cap pipe anchor rod sleeve and provide vent tube at top of pipe anchor rod sleeve prior to placing leveling grout and girder. After all girders are set, grout pipe anchor rod sleeve.

ANCHOR ROD DETAIL

No Scale

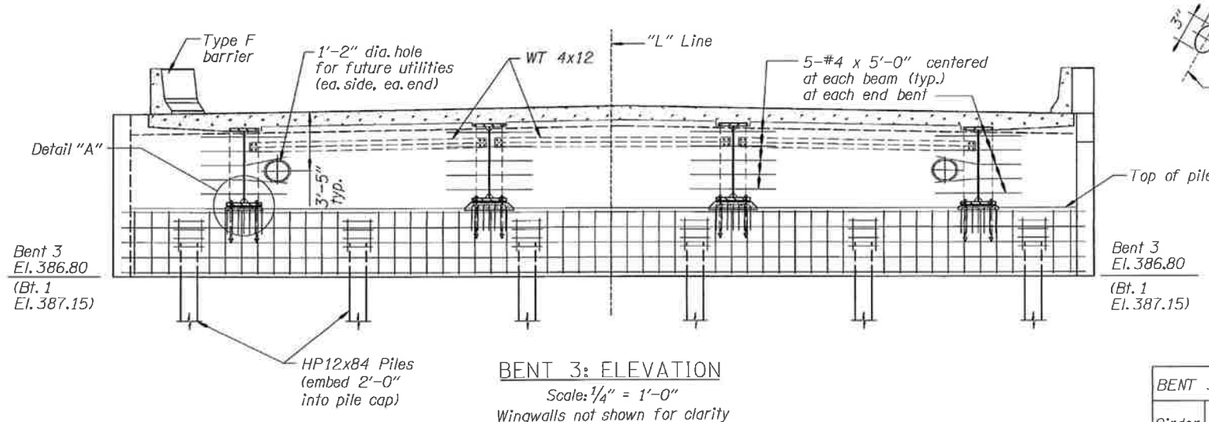

BENT 3: ELEVATION

Scale: 1/4" = 1'-0"

Wingwalls not shown for clarity

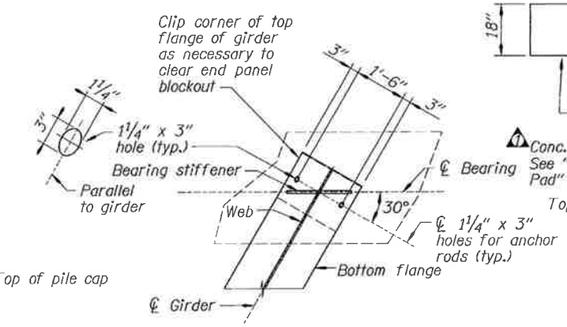

DETAIL "C"

Top flange not shown for clarity

Scale: 1/2" = 1'-0"

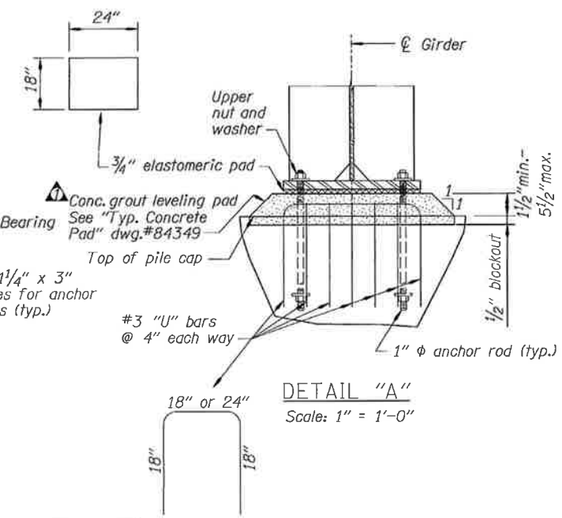

DETAIL "A"

Scale: 1" = 1'-0"

BENT 3 BEAM SEAT ELEVATION	
Girder	Elevation top Concrete pad
B1	391.08
B2	391.28
B3	391.23
B4	390.93

BENT 1 BEAM SEAT ELEVATION	
Girder	Elevation top Concrete pad
A1	391.26
A2	391.54
A3	391.58
A4	391.36

SCALE WARNING

If scale bar doesn't measure one inch then drawing is not to scale

	DATE	REVISION	BY
2	11-05-10	widen conc. pad	EL
1			

ACCOMPANIED BY DWGS. See sheet 1 for this structure

DRAFTER: E. Leon
DESIGNER: Robert Kaspari
CHECKER: Steve Garlick
REVIEWER: R. Grubbs
RENEWS:

STRUCTURAL REGISTERED PROFESSIONAL ENGINEER 12560 OREGON JULY 13, 1988 ROBERT V. KASPARI

OREGON DEPARTMENT OF TRANSPORTATION

BRIDGE ENGINEERING HEADQUARTERS
355 Capitol St NE, Rm 301
Salem, OR 97301-3871
(503) 986-4200

STRUCTURE NO. 20861
DATE August - 2010
CALC. BOOK 5743

CALAPOOYA CREEK, HWY 231
OR138W: DODGE CR/CALAPOOYA CR BRIDGE REPLACEMENTS
ELKTON-SUTHERLIN HWY 138, MP 22.10
DOUGLAS COUNTY

BENT 3 (BENT 1 SIMILAR)

SHEET 15 OF 20

DRAWING NO. 84348

F:\ODOT_DATA\PROJECTS\14813(calapooya creek)\EJL20861L.dgn :: Default 11/8/2010 12:14:28 PM hwye03b 1:48 - 15Bent 3

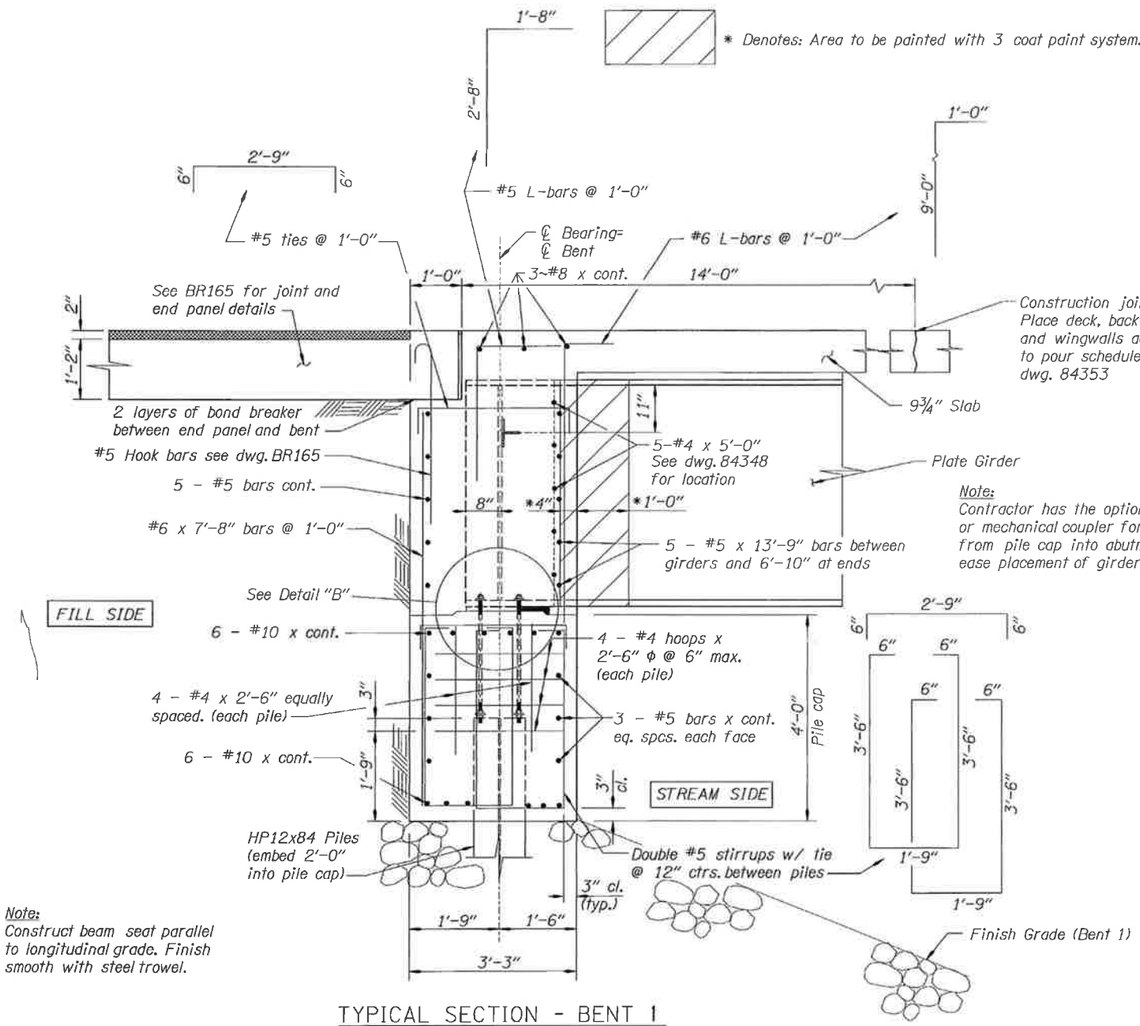

Note:
Construct beam seat parallel to longitudinal grade. Finish smooth with steel trowel.

TYPICAL SECTION - BENT 1
(Bent 3 similar)
Scale: ¾" = 1'-0"

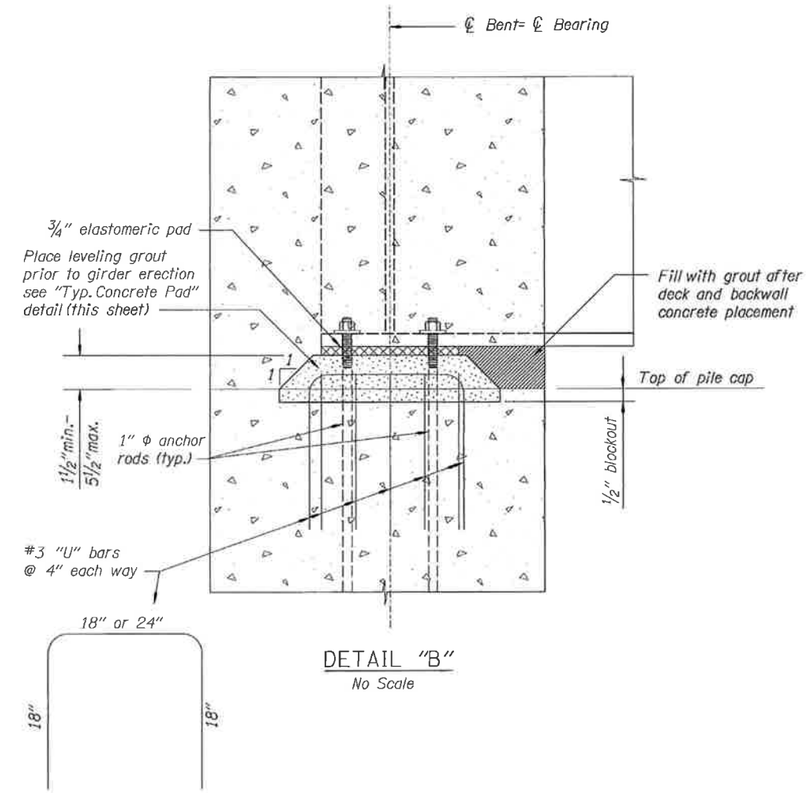

DETAIL "B"
No Scale

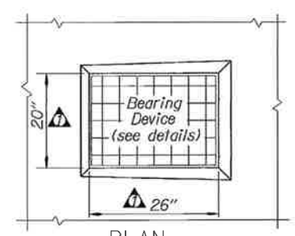

PLAN

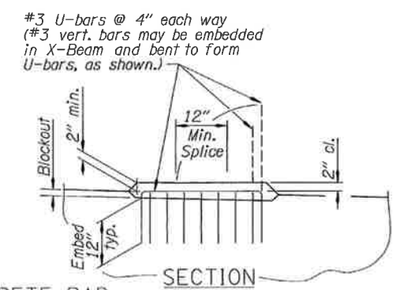

SECTION

TYPICAL CONCRETE PAD
No Scale

SCALE WARNING
If scale bar doesn't measure one inch then drawing is not to scale

	DATE	REVISION	BY
1	11-05-10	removed cl., added dim. and widen conc. pad	EL

ACCOMPANIED BY DWGS. See sheet 1 for this structure

DRAFTER: E. Leon
DESIGNER: Robert Kaspari
CHECKER: Steve Garlick
REVIEWER: R. Grubbs

STRUCTURAL REGISTERED PROFESSIONAL ENGINEER 12560 OREGON JULY 13, 1984 ROBERT V. KASPARI
RENEWS:

OREGON DEPARTMENT OF TRANSPORTATION
BRIDGE ENGINEERING HEADQUARTERS
355 Capitol St NE, Rm 301
Salem, OR 97301-3871
(503) 986-4200

STRUCTURE NO. 20861
DATE August - 2010
CALC. BOOK 5743

CALAPOOYA CREEK, HWY 231
OR138W: DODGE CR/CALAPOOYA CR BRIDGE REPLACEMENTS
ELKTON-SUTHERLIN HWY 138, MP 22.10
DOUGLAS COUNTY

BENT 1 SECTION (Bent 3 Similar)

SHEET 16 OF 20
DRAWING NO. 84349

F:\ODOT_DATA\PROJECTS\14813(calapooya creek)\EJL20861L.dgn :: Default 11/8/2010 12:14:23 PM hwye03b 1:16 - 16BentDetails

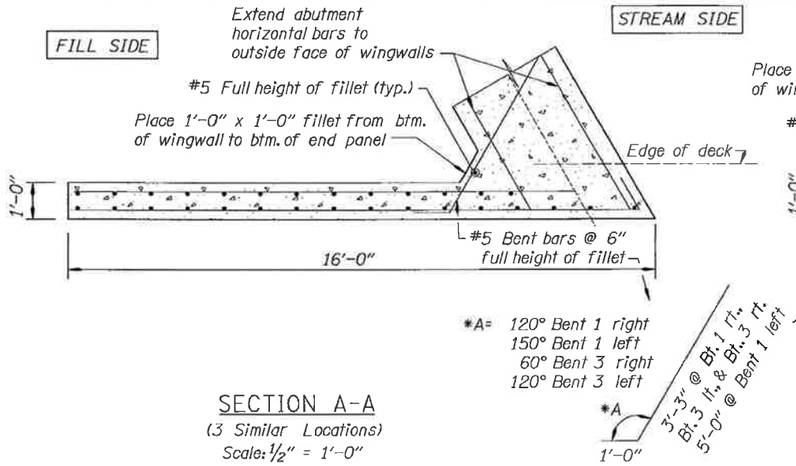

SECTION A-A
(3 Similar Locations)
Scale: 1/2" = 1'-0"

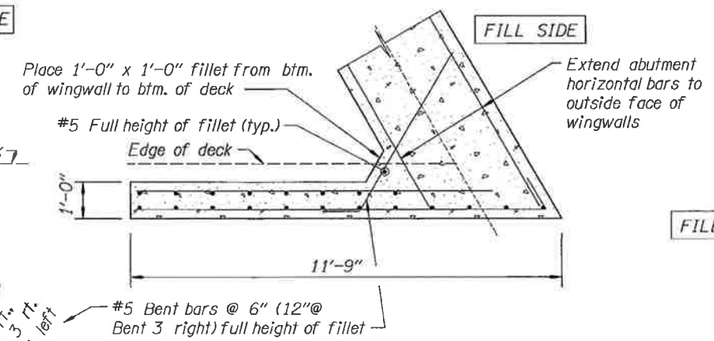

SECTION C-C
(1 Location)
Scale: 1/2" = 1'-0"

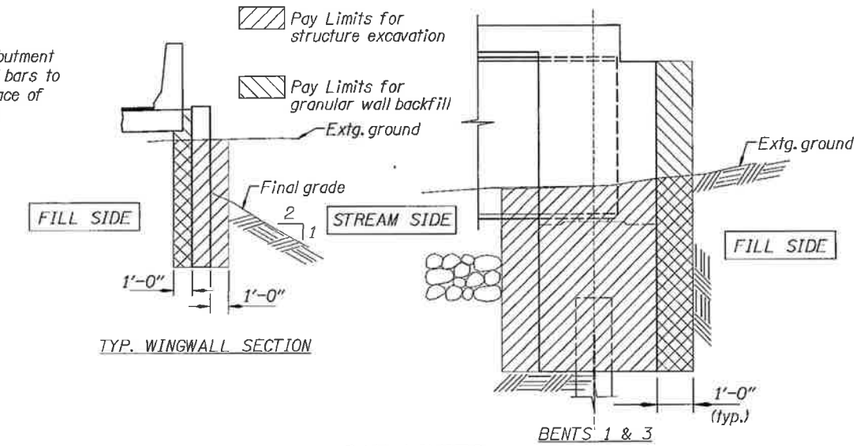

PAY LIMITS
STRUCTURAL EXCAVATION & GRANULAR WALL BACKFILL
No Scale

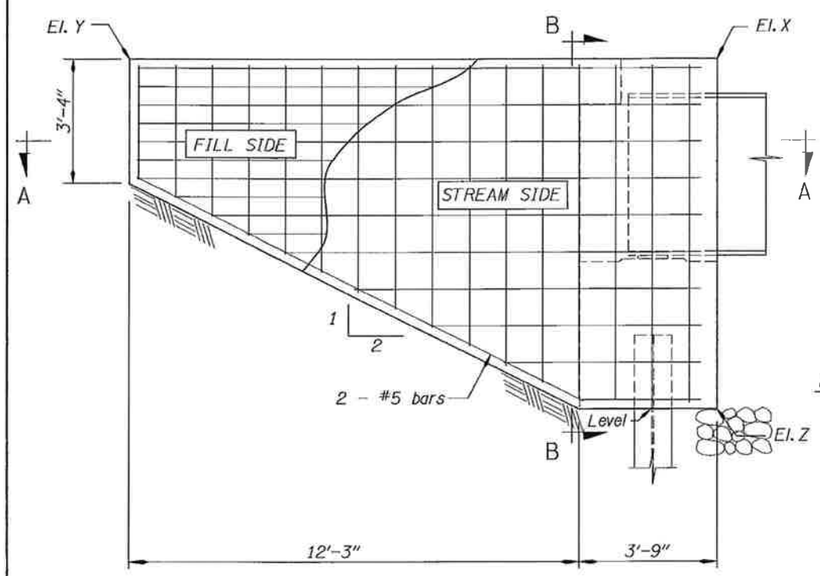

ELEVATION - Bent 1 Wingwall Right
(3 Similar Locations)
Scale: 1/2" = 1'-0"

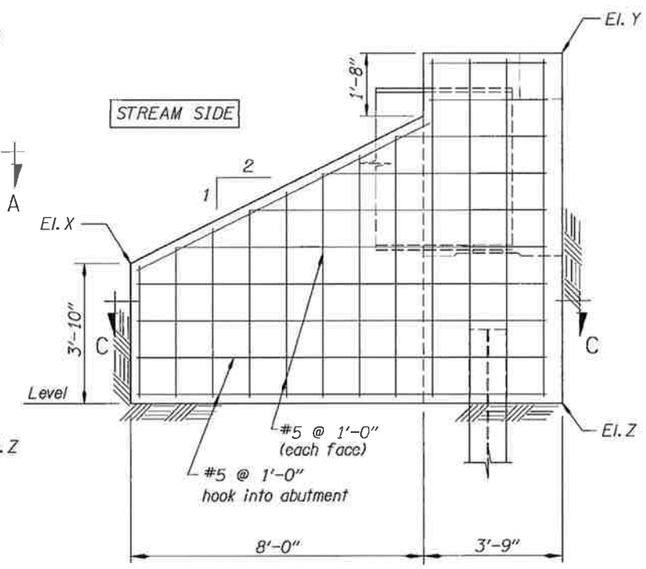

ELEVATION - Bent 3 Wingwall Right
(1 Location)
Scale: 1/2" = 1'-0"

WINGWALL ELEVATIONS (feet)				
Location	Offset	X	Y	Z
Bent 1	Left	396.61	396.61	387.15
Bent 1	Right	396.74	396.74	387.15
Bent 3	Left	396.46	396.46	386.80
Bent 3	Right	390.63	396.29	386.80

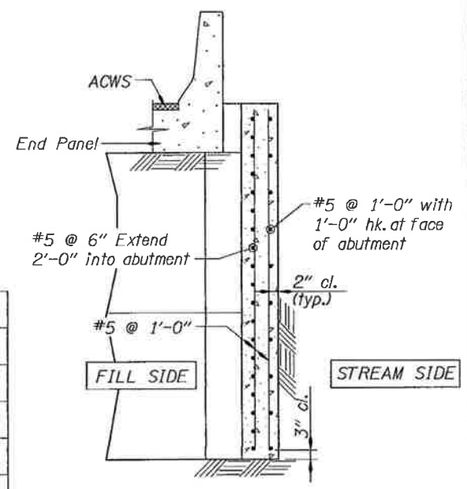

SECTION B-B
Scale: 1/2" = 1'-0"

SCALE WARNING
If scale bar doesn't measure one inch then drawing is not to scale

DATE	REVISION	BY

ACCOMPANIED BY DWGS. See sheet 1 for this structure

DRAFTER: E. Leon
DESIGNER: Robert Kaspari
CHECKER: Steve Garlick
REVIEWER: R. Grubbs

STRUCTURAL REGISTERED PROFESSIONAL ENGINEER 12560 OREGON JULY 13, 1988 ROBERT V. KASPARI
RENEWS: 6/30/2011

OREGON DEPARTMENT OF TRANSPORTATION
BRIDGE ENGINEERING HEADQUARTERS
355 Capitol St NE, Rm 301
Salem, OR 97301-3871
(503) 986-4200

STRUCTURE NO. 20861
DATE August - 2010
CALC. BOOK 5743

CALAPOOYA CREEK, HWY 231
OR138W: DODGE CR/CALAPOOYA CR BRIDGE REPLACEMENTS
ELKTON-SUTHERLIN HWY 138, MP 22.10
DOUGLAS COUNTY

WINGWALLS

SHEET 17 OF 20
DRAWING NO. 84350

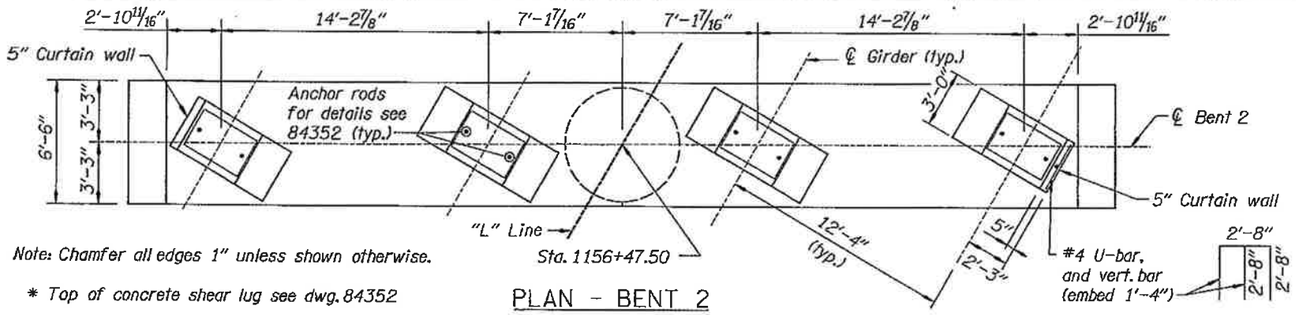

Note: Chamfer all edges 1" unless shown otherwise.

* Top of concrete shear lug see dwg. 84352

** See spiral termination detail on dwg. 84345

PLAN - BENT 2

Scale: 1/4" = 1'-0"

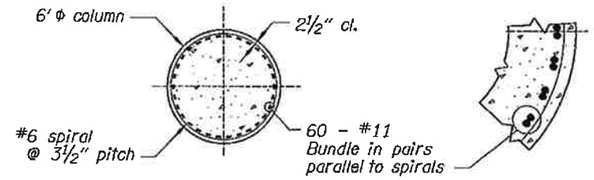

SECTION B-B

Scale: 1/4" = 1'-0"

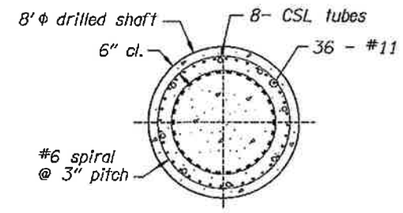

SECTION C-C

Scale: 1/4" = 1'-0"

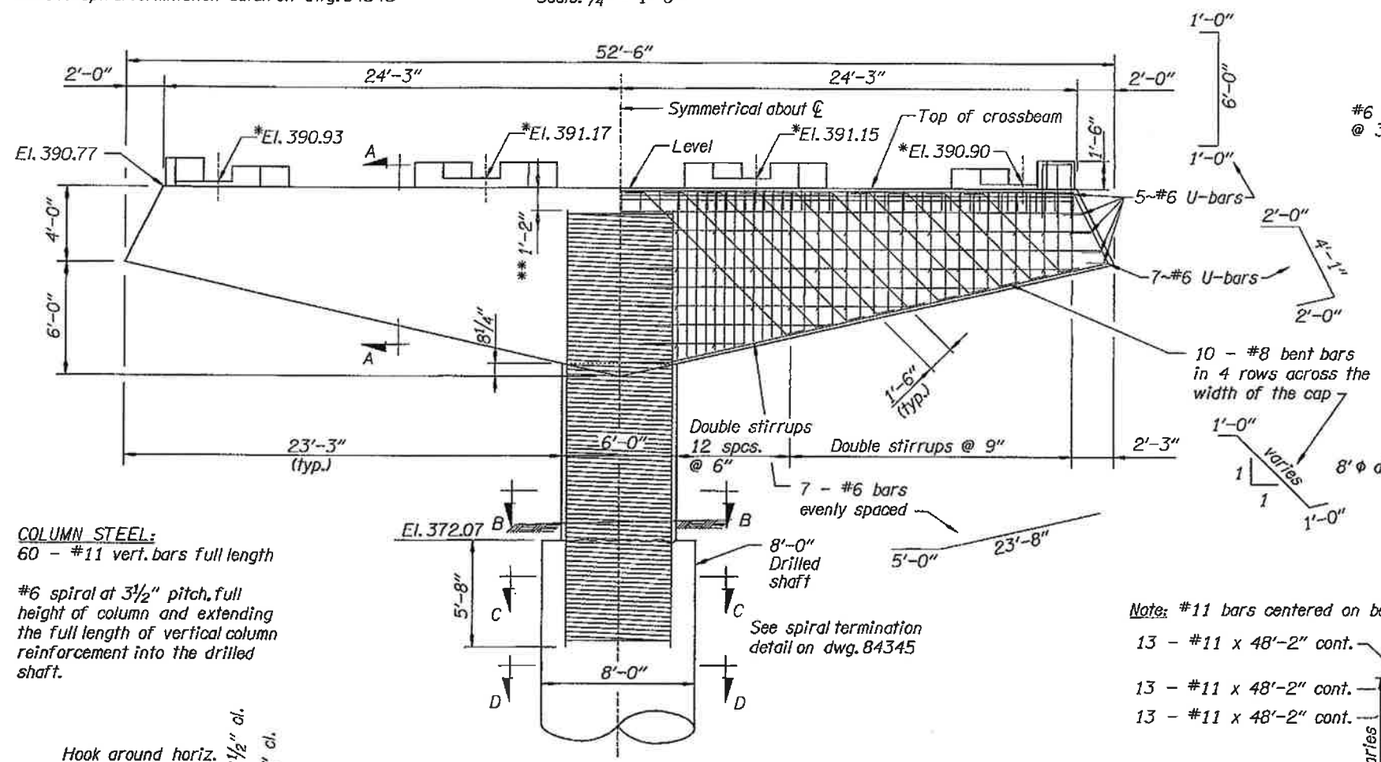

COLUMN STEEL:
60 - #11 vert. bars full length

#6 spiral at 3 1/2" pitch, full height of column and extending the full length of vertical column reinforcement into the drilled shaft.

ELEVATION - BENT 2

Scale: 1/4" = 1'-0"

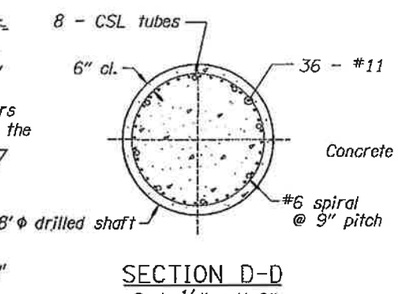

SECTION D-D

Scale: 1/4" = 1'-0"

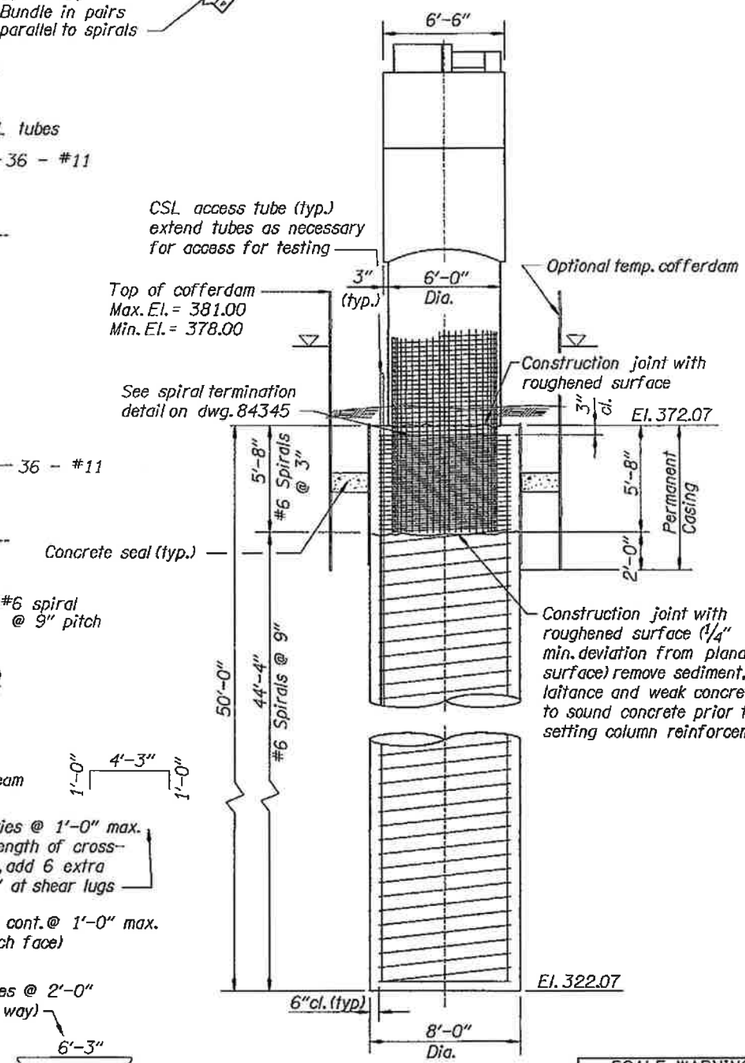

SIDE VIEW - BENT 2

Scale: 1/4" = 1'-0"

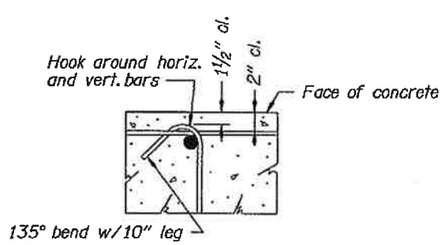

TIE BAR DETAIL

No Scale

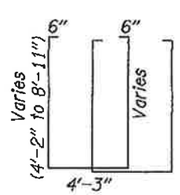

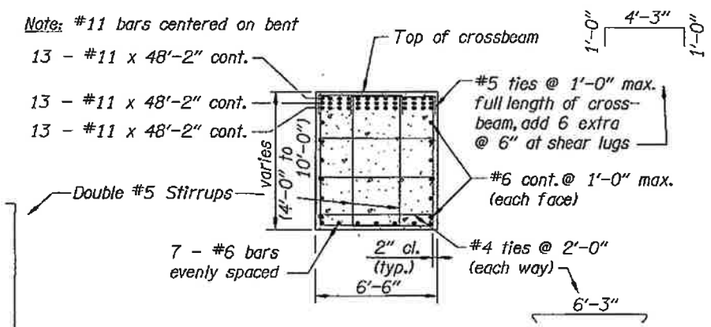

SECTION A-A

Scale: 1/4" = 1'-0"

SCALE WARNING

If scale bar doesn't measure one inch then drawing is not to scale

	DATE	REVISION	BY

ACCOMPANIED BY DWGS. See sheet 1 for this structure

DRAFTER: E. Leon
DESIGNER: Robert Kaspari
CHECKER: Steve Garlick
REVIEWER: R. Grubbs

STRUCTURAL REGISTERED PROFESSIONAL ENGINEER 12560 OREGON JULY 13, 1984 ROBERT V. KASPARI
RENEWS: 6/30/2011

OREGON DEPARTMENT OF TRANSPORTATION
BRIDGE ENGINEERING HEADQUARTERS
355 Capitol St NE, Rm 301
Salem, OR 97301-3871
(503) 986-4200

STRUCTURE NO. 20861
DATE August - 2010
CALC. BOOK 5743

CALAPOOYA CREEK, HWY 231
OR138W: DODGE CR/CALAPOOYA CR BRIDGE REPLACEMENTS
ELKTON-SUTHERLIN HWY 138, MP 22.10
DOUGLAS COUNTY

BENT 2

SHEET 18 OF 20

DRAWING NO. 84351

F:\ODOT_DATA\PROJECTS\14813(calapooya creek)\EJL20861L.dgn :: Default 9/8/2010 3:57:18 PM hwye03b 1:48- 18Bent 2

BEARING AND BEAM PLACEMENT CONSTRUCTION SEQUENCE:

Place 1/4" layer of non-epoxy grout in elastomeric bearing pad footprint, place the elastomeric bearing pad and place the beam before the grout is fully set to obtain uniform bearing on the pedestal.

Remove any excess protruding grout immediately after placing the beam.

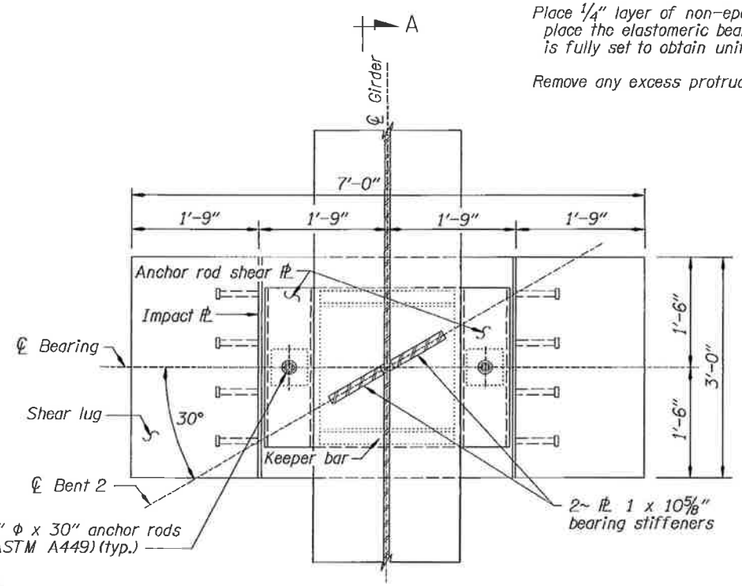

PLAN

Note: Bearing pads shall be placed normal to longitudinal beam centerline.

Longitudinal slope of top of concrete pads shall match deck grade line.

Transverse slope of top of concrete pads shall be level.

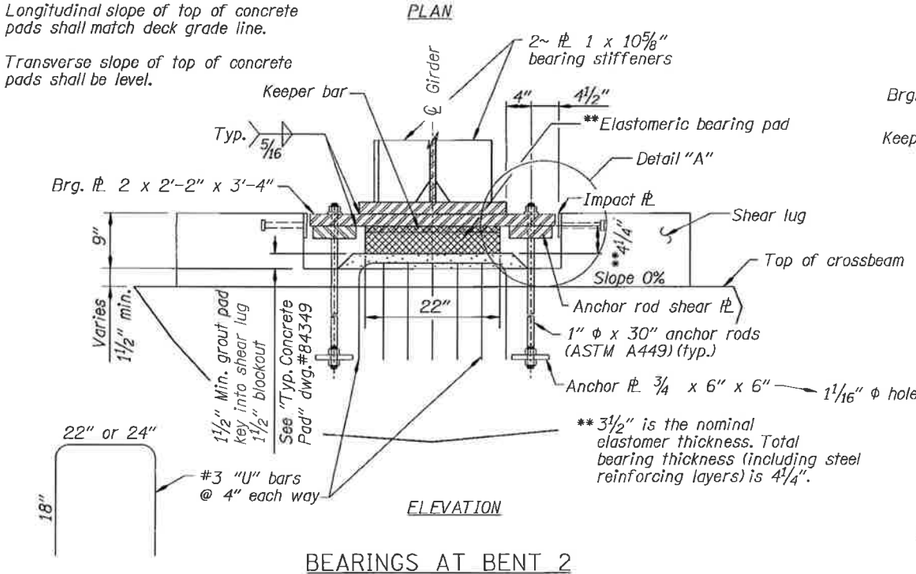

ELEVATION

BEARINGS AT BENT 2
No Scale

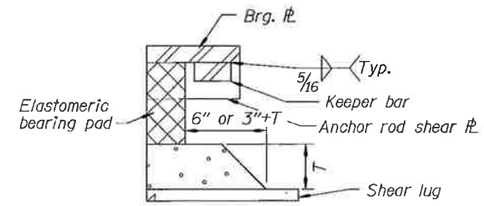

Note: Maintain a 1/2" gap between the bearing pad and keeper bar, and between the bearing ℔ and impact ℔.

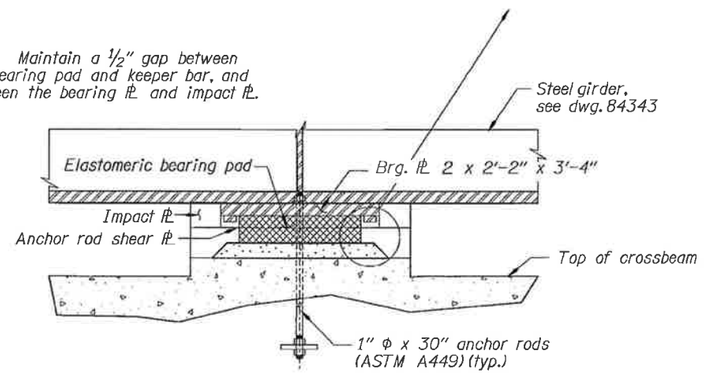

SECTION A-A
No Scale

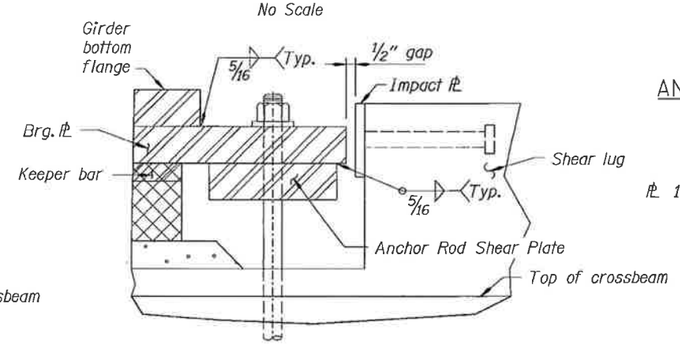

DETAIL "A"
No Scale

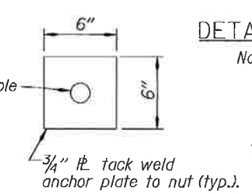

ANCHOR PLATE
(8 Required)
No Scale

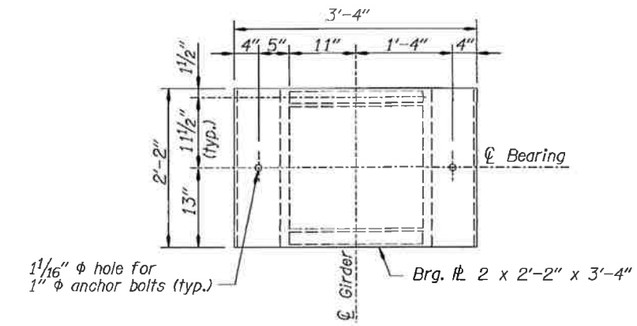

BEARING PLATE
(4 Required)
No Scale

Note: Reinforced elastomeric pads are designed using AASHTO Method B

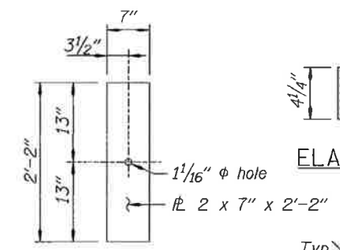

ANCHOR ROD SHEAR PLATE
(8 Required)
No Scale

KEEPER BAR
(8 Required)
No Scale

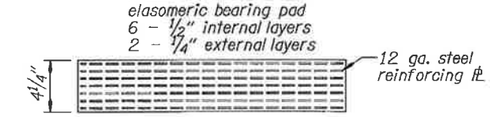

ELASTOMERIC BEARING PAD
(4 Required)
No Scale

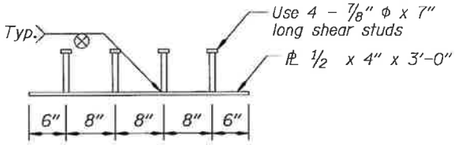

IMPACT PLATE
(6 Required)
No Scale

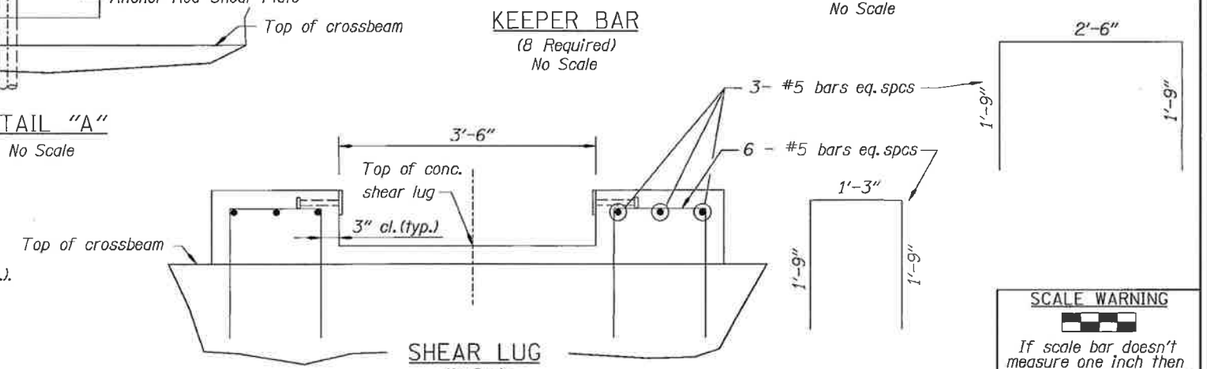

SHEAR LUG
No Scale

SCALE WARNING
If scale bar doesn't measure one inch then drawing is not to scale

DATE	REVISION	BY

ACCOMPANIED BY DWGS. See sheet 1 for this structure

DRAFTER: E. Leon
DESIGNER: Robert Kaspari
CHECKER: Steve Garlick
REVIEWER: R. Grubbs

STRUCTURAL REGISTERED PROFESSIONAL ENGINEER 12360 OREGON JULY 13, 1984 ROBERT V. KASPARI
RENEWS: 6/30/2011

OREGON DEPARTMENT OF TRANSPORTATION
BRIDGE ENGINEERING HEADQUARTERS
355 Capitol St NE, Rm 301
Salem, OR 97301-3871
(503) 986-4200

STRUCTURE NO. 20861
DATE August - 2010
CALC. BOOK 5743

CALAPOOYA CREEK, HWY 231
OR138W: DODGE CR/CALAPOOYA CR BRIDGE REPLACEMENTS
ELKTON-SUTHERLIN HWY 138, MP 22.10
DOUGLAS COUNTY

BENT 2 BEARINGS AND SHEAR LUG

SHEET 19 OF 20
DRAWING NO. 84352

F:\ODOT_DATA\PROJECTS\14813(calapooya creek)\EJL20861L.dgn :: Default 9/8/2010 3:56:58 PM hwye03b 1:12 - 19Bearing

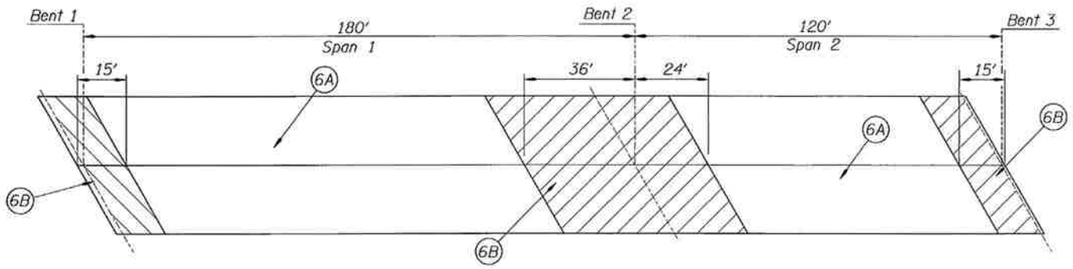

DECK POUR SCHEDULE

No Scale

Pour deck pours 6A . May be made simultaneously or seperately as desired by the contractor.
Pour deck pours 6B after a minimum of 3 days & concrete has reached 70% full strength.
Pours shall be poured full deck width.
Pours 6A will remain fully plastic until the completion of Pours 6A
No bulkheads will be allowed except at Pour 6A and Pour 6B interface as shown above.

Note: Deck concrete shall be placed and screeded ~~normal to roadway ℄~~. parallel to bent centerlines

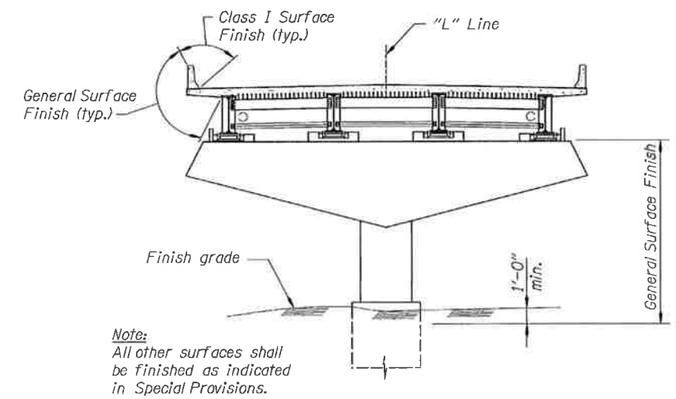

CONCRETE FINISH DETAILS

No Scale

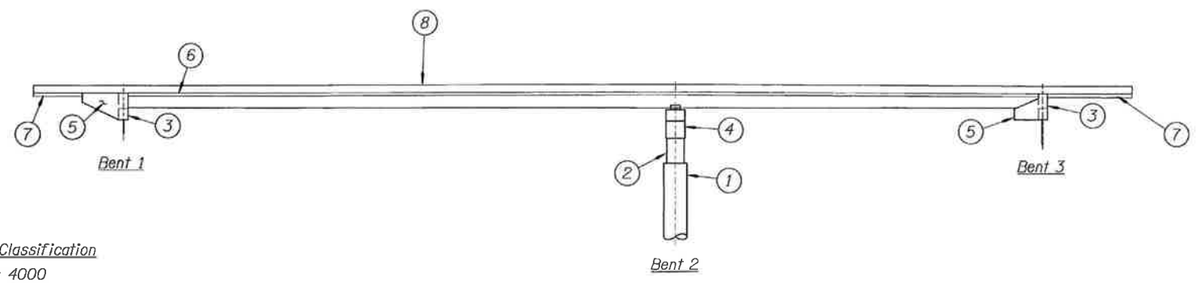

Concrete Classification
1 Class 4000
2 3 4 5 8 Class 3300
6 7 Class HPC4000

CONCRETE POUR SCHEDULE

No Scale

CONCRETE PLACEMENT NOTES:

1. Deck saw cutting equipment shall run perpendicular to the ℄ structure and concrete shall be placed full width of the deck, perpendicular to the ℄ structure.
2. Any changes to the construction sequence are subject to review and written approval from the Engineer prior to construction.

CONSTRUCTION AND CONCRETE PLACEMENT SEQUENCE

1. Place pour 1 (Bent 2 drilled shaft).
2. Place pour 2 (Bent 2 column).
3. Drive pilings at Bents 1 and 3.
4. Place pour 3 (Bents 1 and 3 pile caps).
5. Place pour 4 (Bent 2 cross beam). Make pour 4 a minimum of 3 days after pour 2. Bents 1 and 3 pile caps and Bent 2 cross beam may be poured anytime up to 7 days prior to placement of steel girders, but concrete must have reached its design strength prior to steel girder placement.
6. Place steel girders and install cross frames.
7. Place end fills at Bents 1 and 3.
8. Place pour 6 (deck pour). See deck pour schedule this sheet.
9. Place pour 5 (Bents 1 and 3 end walls and wingwalls) simultaneously with deck pour 6B, and Bent 2 shear lugs and curtain wall.
10. Place pour 7 (bridge end panels).
11. Place pour 8 (Type "F" concrete bridge rails). Pour 8 shall be poured after pour 6 has reached design strength, but no earlier than 7 days after pour 6 is complete.
12. Finish concrete.

SCALE WARNING
If scale bar doesn't measure one inch then drawing is not to scale

	DATE	REVISION	BY
1	11-05-10	changed note	EL

ACCOMPANIED BY DWGS. See sheet 1 for this structure

DRAFTER: E. Leon
DESIGNER: Robert Kaspari
CHECKER: Steve Garlick
REVIEWER: R. Grubbs
RENEWS:

STRUCTURAL REGISTERED PROFESSIONAL ENGINEER 12560 OREGON JULY 13, 1984 ROBERT V. KASPARI

OREGON DEPARTMENT OF TRANSPORTATION
BRIDGE ENGINEERING HEADQUARTERS
355 Capitol St NE, Rm 301
Salem, OR 97301-3871
(503) 986-4200

STRUCTURE NO. 20861
DATE August - 2010
CALC. BOOK 5743

CALAPOOYA CREEK, HWY 231
OR138W: DODGE CR/CALAPOOYA CR BRIDGE REPLACEMENTS
ELKTON-SUTHERLIN HWY 138, MP 22.10
DOUGLAS COUNTY

CONCRETE PLACEMENT AND CONSTRUCTION DETAILS

SHEET 20 OF 20
DRAWING NO. 84353