Signal Inspector Certification

2016

CLASS MATERIALS

Oregon Department of Transportation

Oregon Department of Transportation
Technical Services
Traffic-Roadway Section
Traffic Standards Unit
http://www.oregon.gov/ODOT/HWY/TS/signals.shtml

Tab with Title:

Standard Drawings

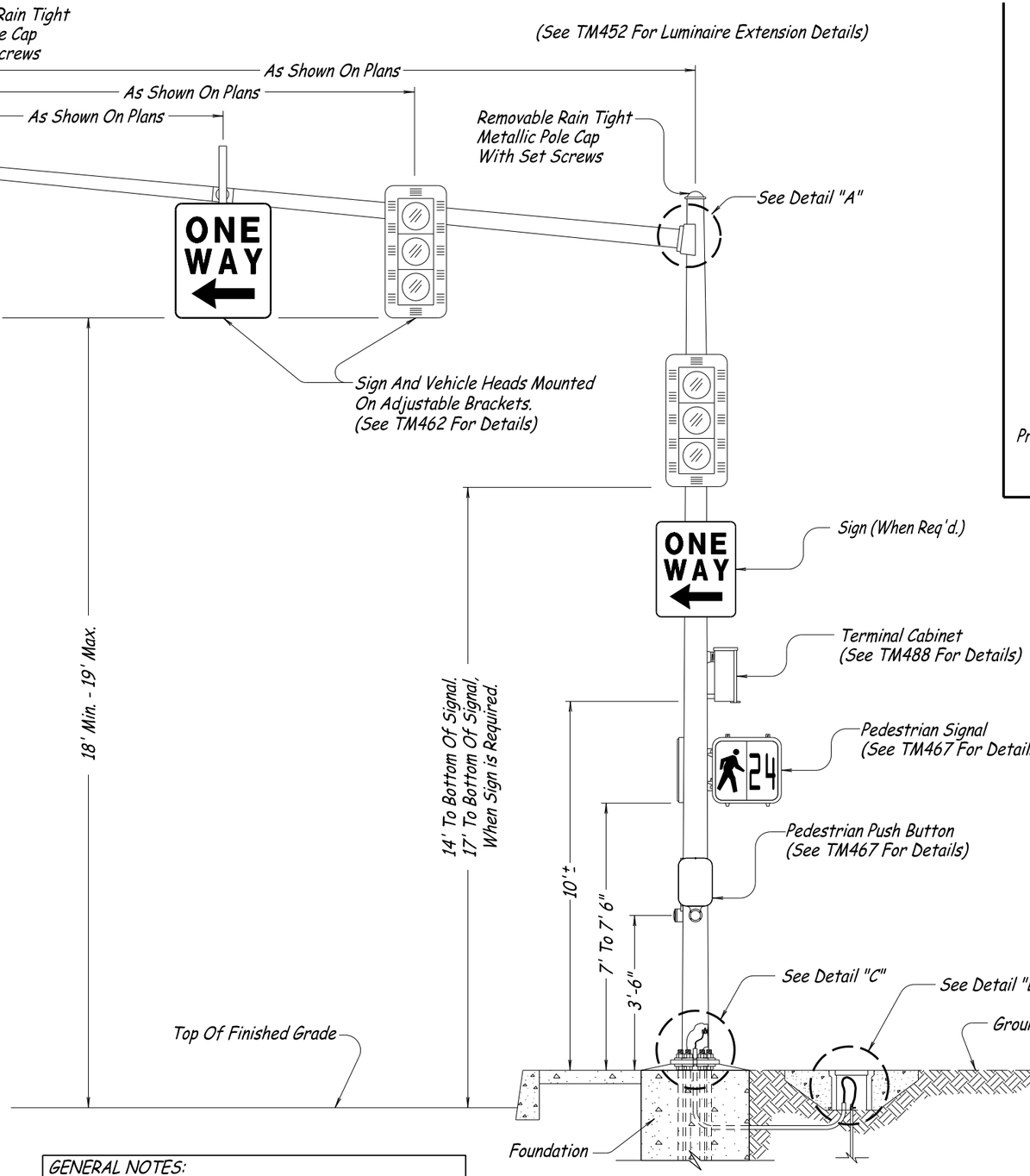

MAST ARM POLE

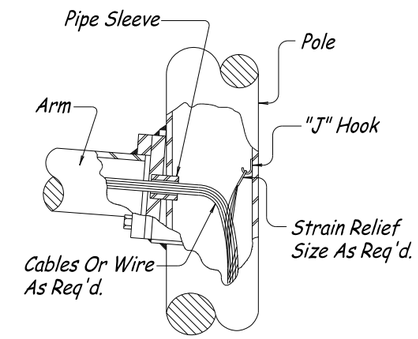

DETAIL "A"

Preinstalled "J" Hooks In Poles For Wire Compression Strain Relief Devices (Cable Grips) At All Access Entrances For Luminaire & Signal Arms.

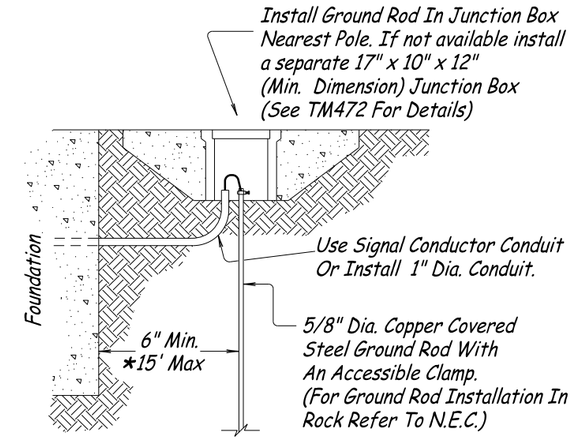

DETAIL "B"

*See Specifications For Structure Mounted Poles. 15' Max. Does Not Apply When Using The First Junction Box Nearest The Pole.

STANDARD GROUND ROD INSTALLATION DETAIL

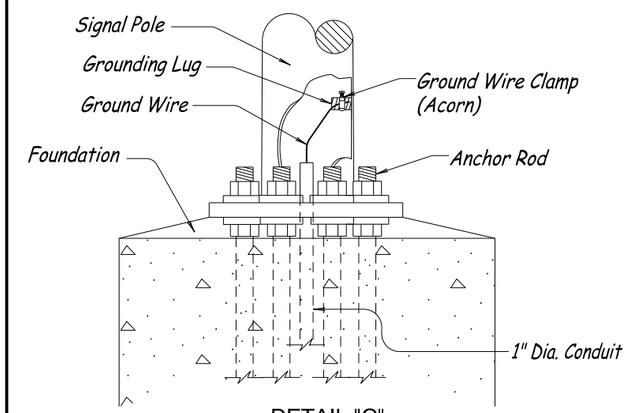

DETAIL "C"

INTERIOR GROUND DETAIL

GENERAL NOTES:

1. All Pole Entrances Containing Wiring Shall Be Smooth.
2. See TM462 For Adjustable Bracket Details.

NOTE:

All Bolts, Nuts And Washers Shall Be Stainless Steel Unless Noted Otherwise.

CALC. BOOK NO. N/A	BASELINE REPORT DATE 07-01-15
ACCOMPANIED BY BASELINE REPORT	NOTE: All material and workmanship shall be in accordance with the current Oregon Standard Specifications

The selection and use of this Standard Drawing, while designed in accordance with generally accepted engineering principles and practices, is the sole responsibility of the user and should not be used without consulting a Registered Professional Engineer.

OREGON STANDARD DRAWINGS

MAST ARM POLE DETAILS

2015

REVISIONS

DATE	DESCRIPTION
07-01-15	Changed Pedestrian Push Button from "H" Frame to Standard
---------	Pedestrian Push Button Station

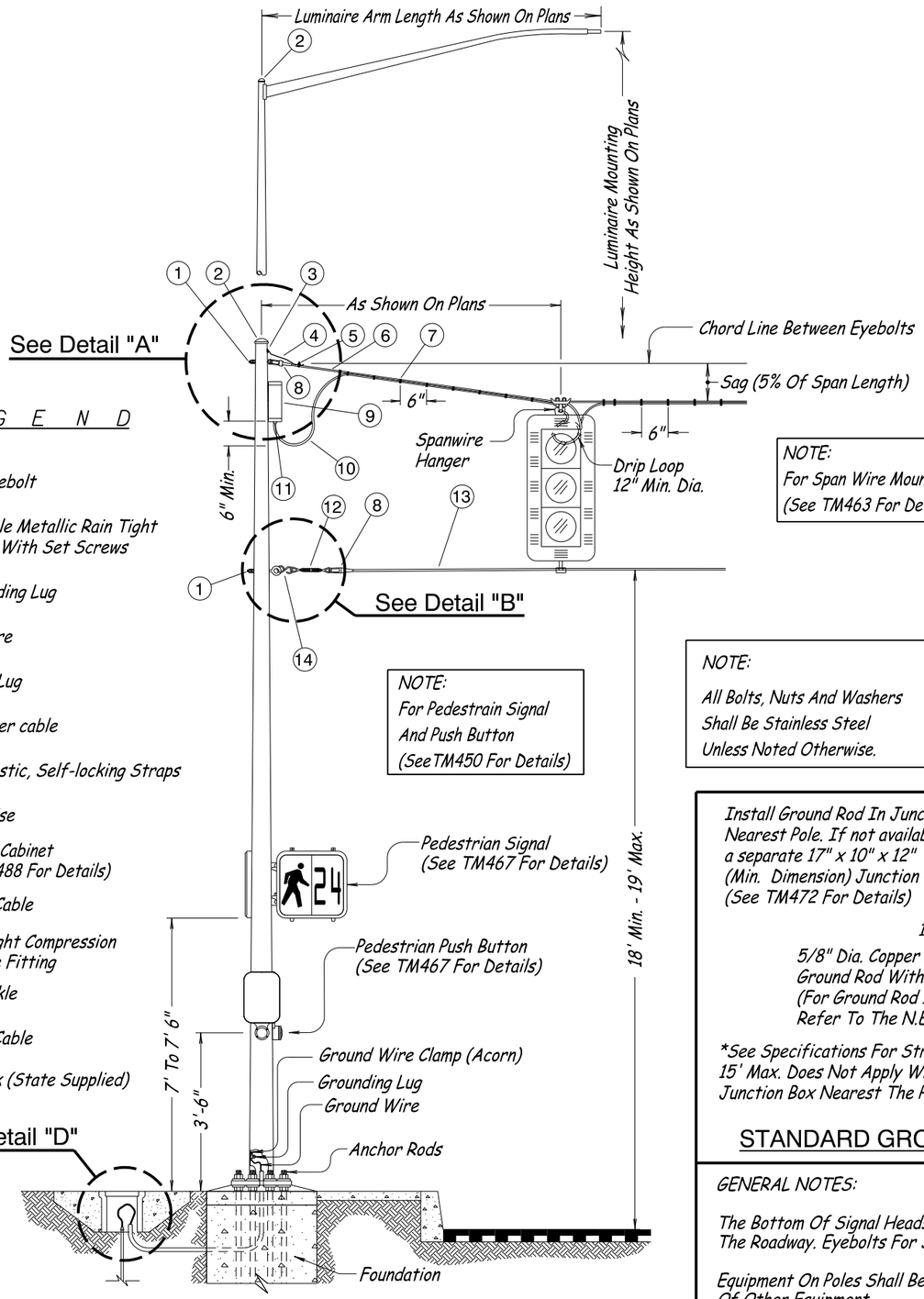

NOTE:
For Span Wire Mounting
(See TM463 For Details)

NOTE:
For Pedestrain Signal
And Push Button
(SeeTM450 For Details)

NOTE:
All Bolts, Nuts And Washers
Shall Be Stainless Steel
Unless Noted Otherwise.

L E G E N D

1. Cable Eyebolt
2. Removable Metallic Rain Tight Pole Cap With Set Screws
3. Pole Bonding Lug
4. Bond Wire
5. Bonding Lug
6. Messenger cable
7. Black Plastic, Self-locking Straps
8. Strandvise
9. Terminal Cabinet (See TM488 For Details)
10. Control Cable
11. Watertight Compression Entrance Fitting
12. Turnbuckle
13. Tether Cable
14. "S" Hook (State Supplied)

STRAIN POLE (Typical Curbed Section)

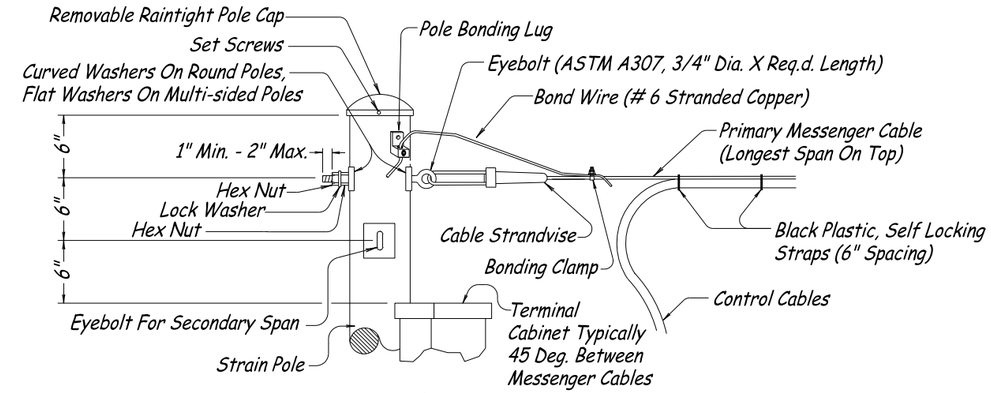

DETAIL "A"
MESSENGER CABLE CONNECTION

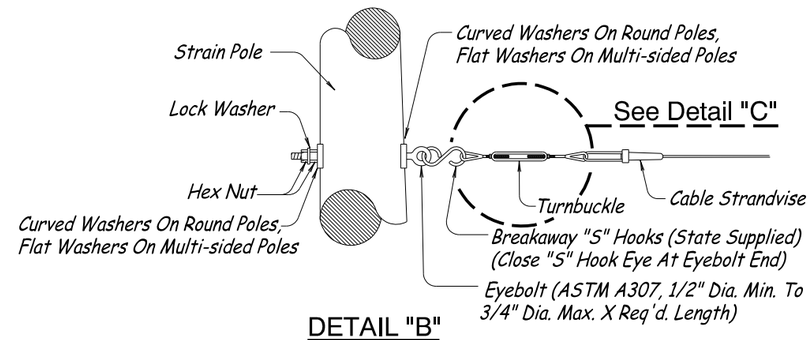

DETAIL "B"
TETHER CABLE CONNECTION TO POLE
(BOTH ENDS OF TETHER)

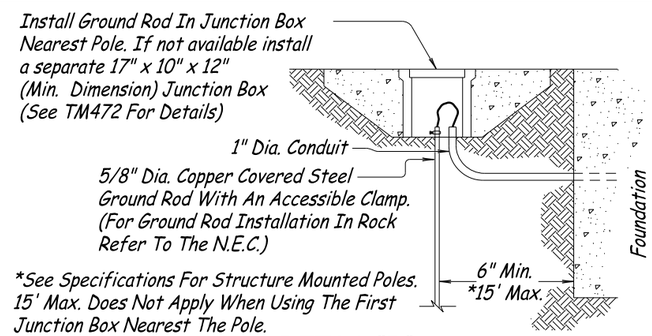

*See Specifications For Structure Mounted Poles. 15' Max. Does Not Apply When Using The First Junction Box Nearest The Pole.

DETAIL "D"
STANDARD GROUND ROD INSTALLATION DETAIL

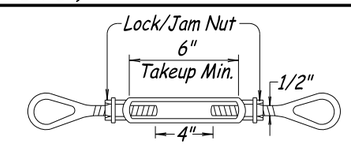

DETAIL "C"
TURNBUCKLE

Turnbuckles Shall Be Constructed Of Hot-Dipped Galvanized Steel With A Minimum Working Load Of 2,200 Lb.

GENERAL NOTES:

The Bottom Of Signal Heads Shall Be At The Same Vertical Elevation Above The Roadway. Eyebolts For Span Need Not Be At The Same Elevation.

Equipment On Poles Shall Be Located So As To Not Interfere With Installation Of Other Equipment.

All Pole Entrances Containing Wiring Shall Be Smooth.

CALC. BOOK NO. N/A

BASELINE REPORT DATE 07-01-15

ACCOMPANIED BY BASELINE REPORT

NOTE: All material and workmanship shall be in accordance with the current Oregon Standard Specifications

The selection and use of this Standard Drawing, while designed in accordance with generally accepted engineering principles and practices, is the sole responsibility of the user and should not be used without consulting a Registered Professional Engineer.

OREGON STANDARD DRAWINGS

STRAIN POLE DETAILS

2015

REVISIONS

DATE	DESCRIPTION
07-01-15	Changed Pedestrian Push Button from "H" Frame to Standard
---------	Pedestrian Push Button Station

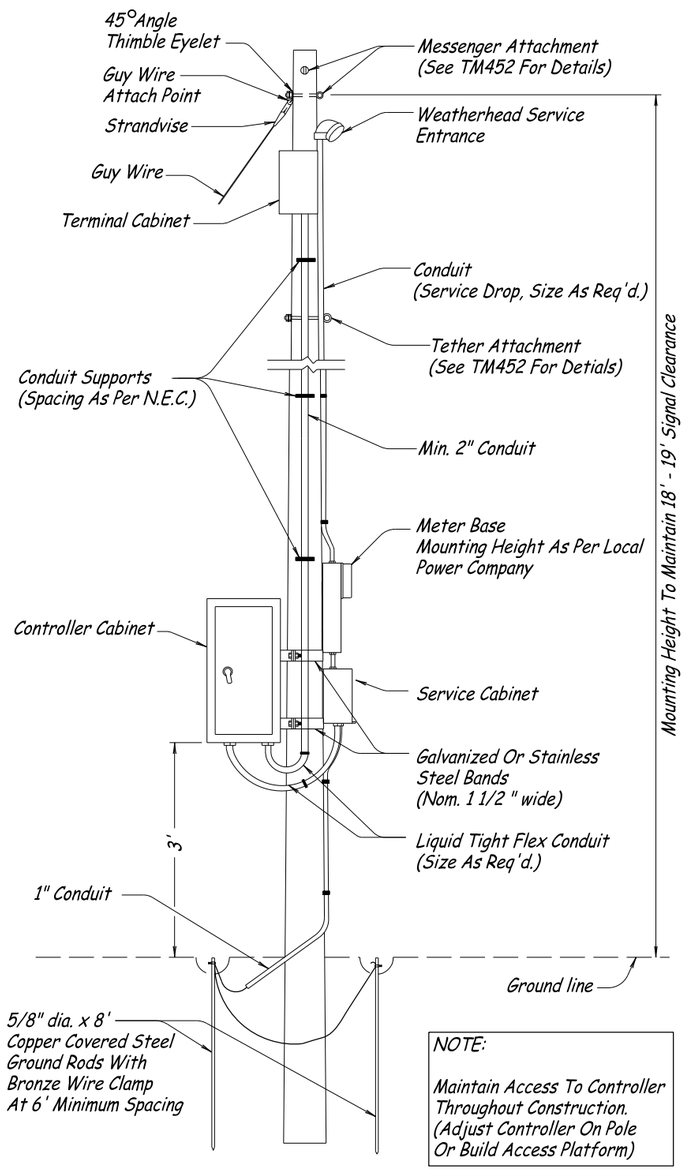

TYPICAL CONTROLLER & SERVICE ON WOOD POLE

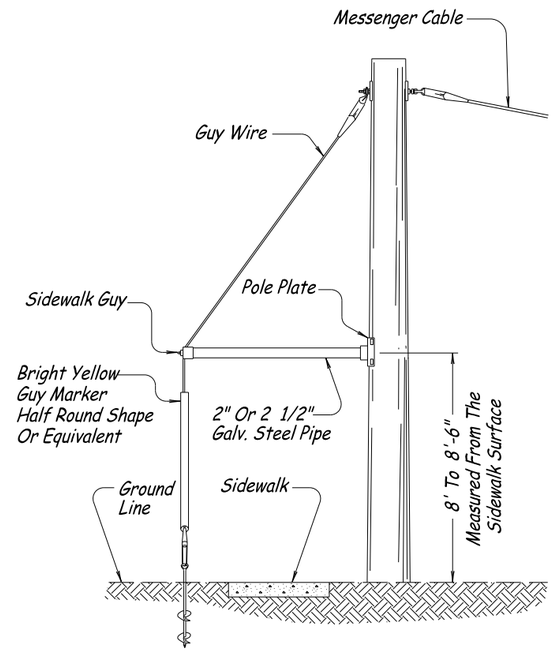

SIDEWALK ANCHOR GUY

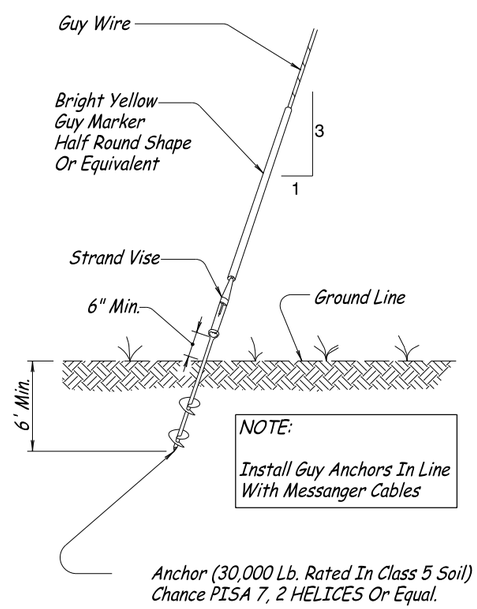

GUY ANCHOR ASSEMBLY

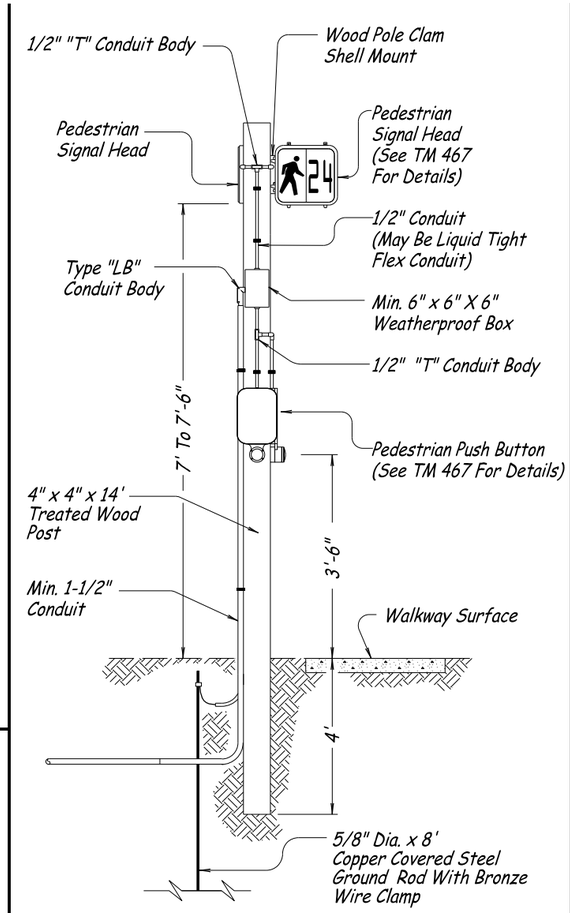

TYPICAL PEDESTRIAN INSTALLATION ON WOOD POST

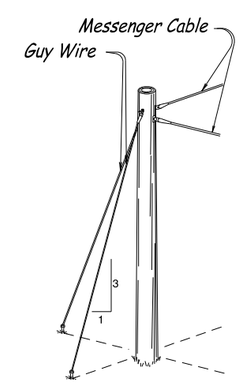

GUY WIRE

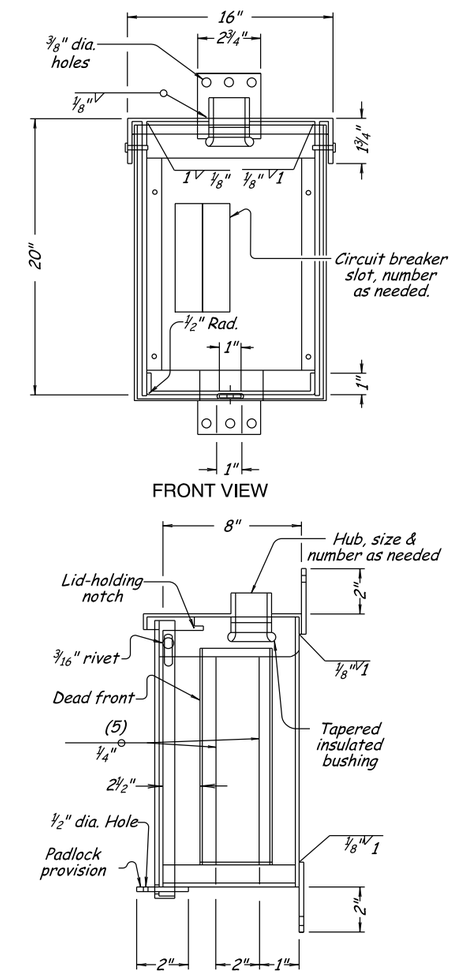

NOTE:
See TM485 for Wiring Diagrams

TEMPORARY SERVICE CABINET

CALC. BOOK NO. N/A	BASELINE REPORT DATE 07-01-15
ACCOMPANIED BY BASELINE REPORT	NOTE: All material and workmanship shall be in accordance with the current Oregon Standard Specifications

The selection and use of this Standard Drawing, while designed in accordance with generally accepted engineering principles and practices, is the sole responsibility of the user and should not be used without consulting a Registered Professional Engineer.

OREGON STANDARD DRAWINGS

TEMPORARY SIGNAL POLE DETAILS

2015

REVISIONS

DATE	DESCRIPTION
07-01-15	Changed Pedestrian Push Button from "H" Frame to Standard
---------	Pedestrian Push Button Station

December 1, 2015 - May 31, 2016

TM455

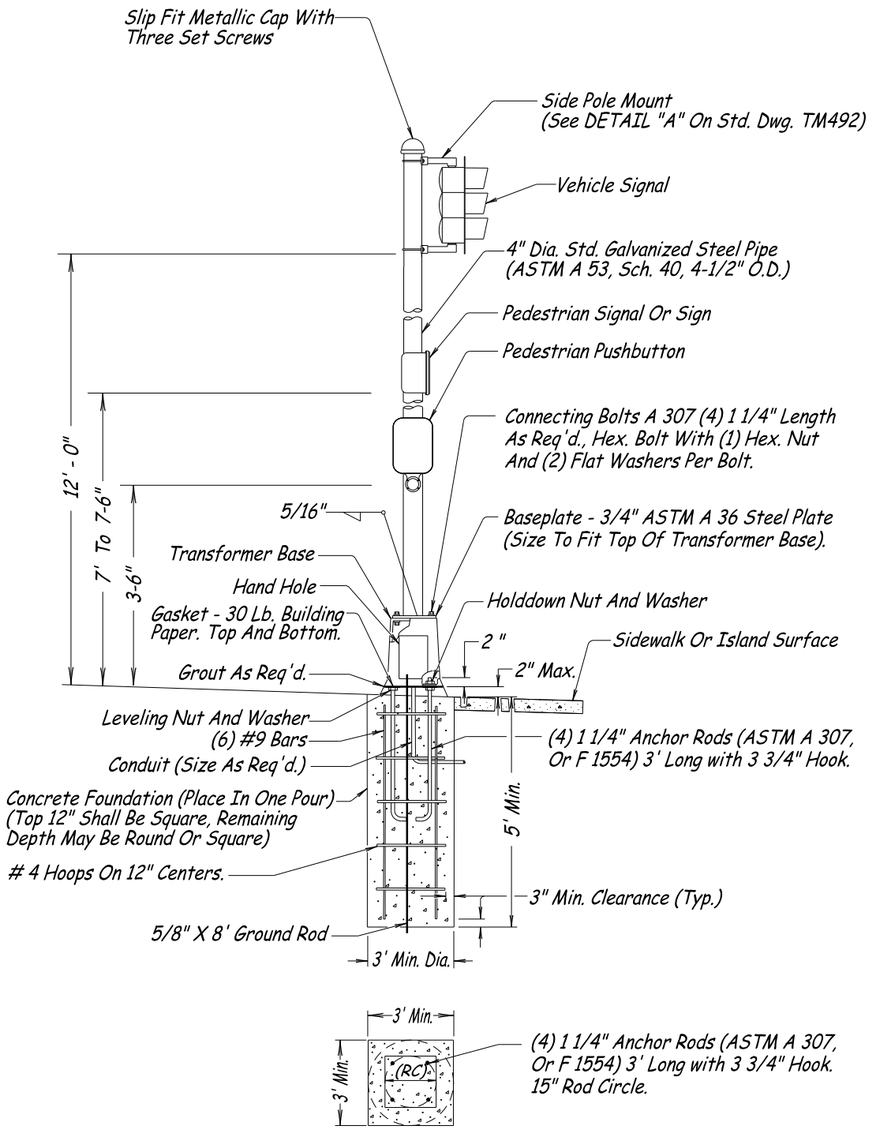

VEHICLE SIGNAL PEDESTAL

NOTE:

Flat Side Of Pedestal Base Can Be Lined Up With Back Of Sidewalk

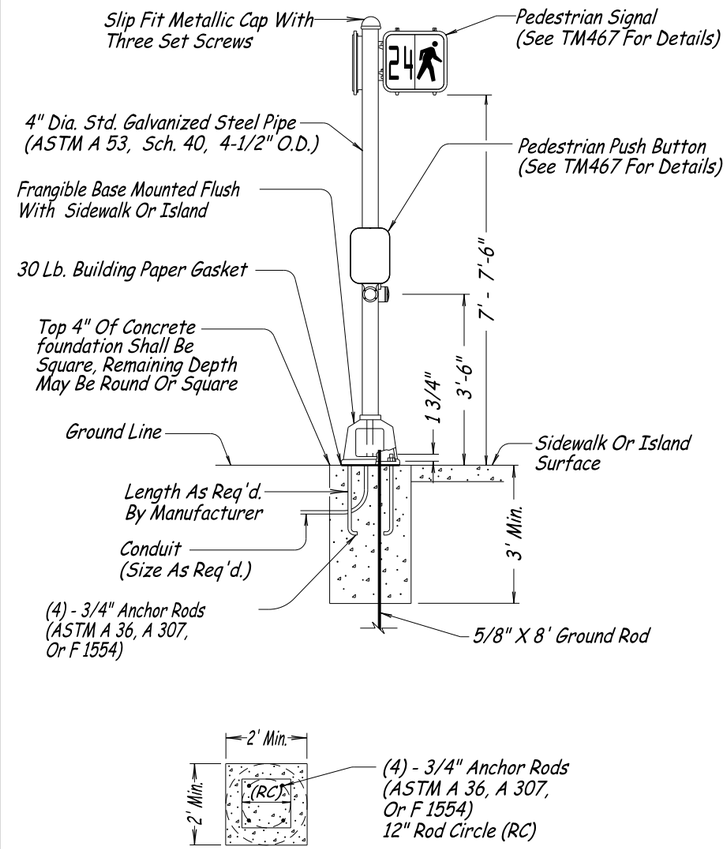

PEDESTRIAN SIGNAL PEDESTAL

GENERAL NOTES:

All Surface Joints Where Concrete And Aluminum Meet Shall Be Gasketed With 30 Lb. Building Paper

All Rods, Bolts, Nuts And Washers Shall Be Galvanized Steel Unless Noted Otherwise

All Pole Entrances Containing Wiring Shall Be Smooth

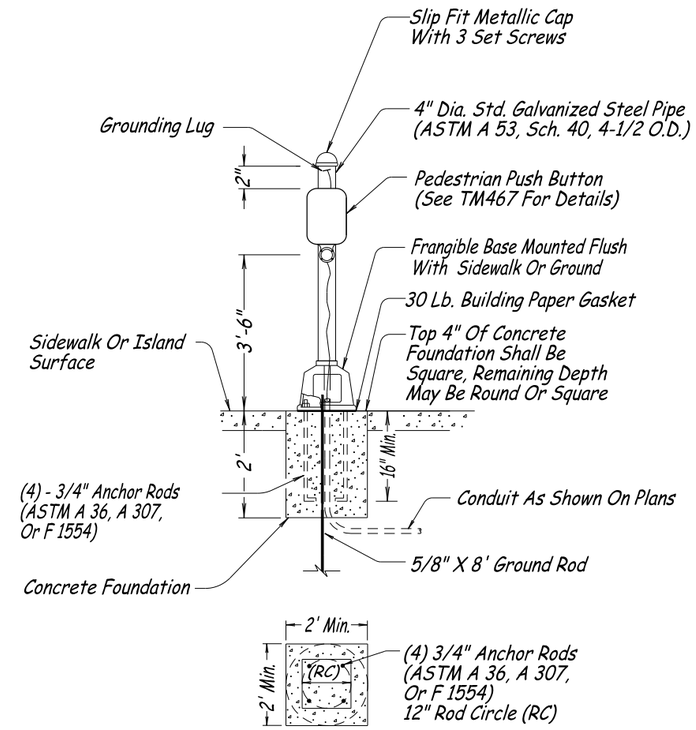

PEDESTRIAN OR BICYCLE PUSH BUTTON POST

CALC. BOOK NO. N/A	BASELINE REPORT DATE 07-01-15
ACCOMPANIED BY BASELINE REPORT	NOTE: All material and workmanship shall be in accordance with the current Oregon Standard Specifications

The selection and use of this Standard Drawing, while designed in accordance with generally accepted engineering principles and practices, is the sole responsibility of the user and should not be used without consulting a Registered Professional Engineer.

OREGON STANDARD DRAWINGS

VEHICLE, PEDESTRIAN SIGNAL AND PUSHBUTTON MOUNTING OPTION DETAILS

2015

REVISIONS

DATE	DESCRIPTION
07-01-15	Changed Pedestrian Push Button from "H" Frame to Standard
---------	Pedestrian Push Button Station

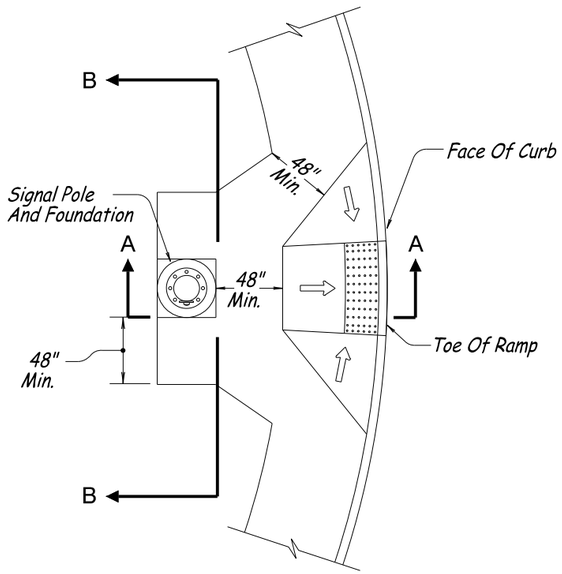

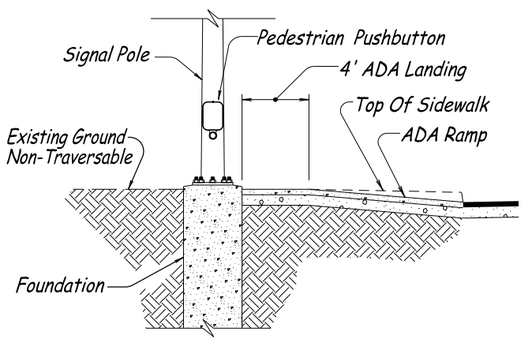

SECTION A-A

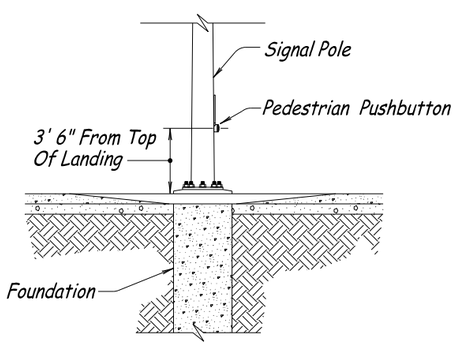

SECTION B-B

SIGNAL POLE AT PERPENDICULAR SIDEWALK RAMP

✱ 24" From Face Of Curb To Face Of Pedestrian Pushbutton

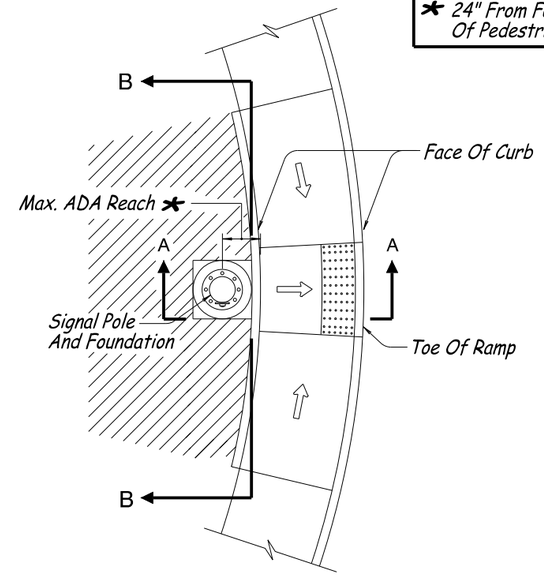

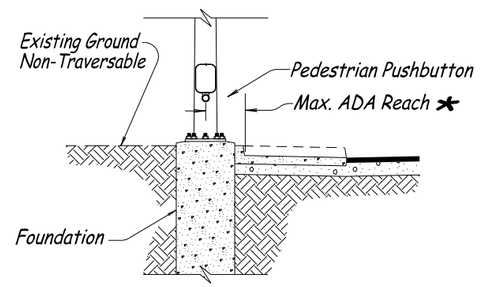

SECTION A-A

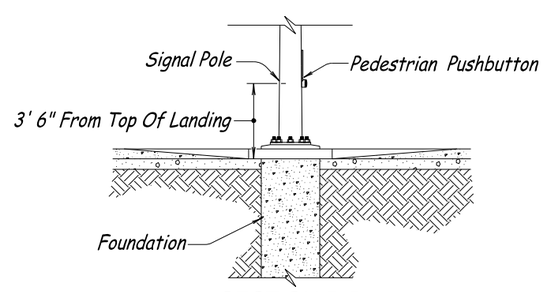

SECTION B-B

SIGNAL POLE AT PARALLEL SIDEWALK RAMP

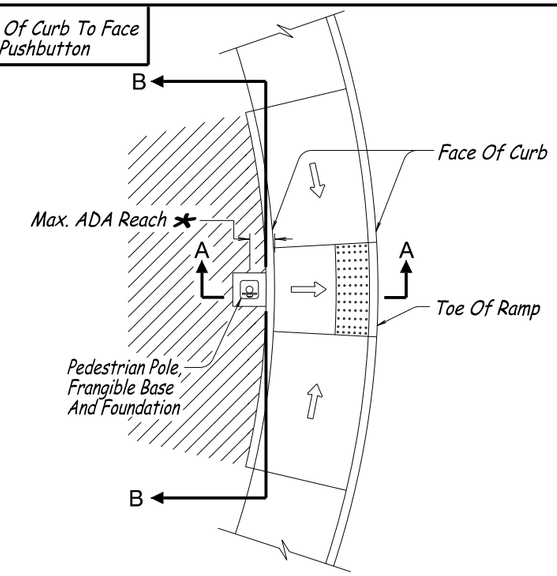

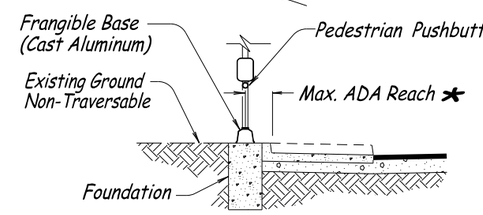

SECTION A-A

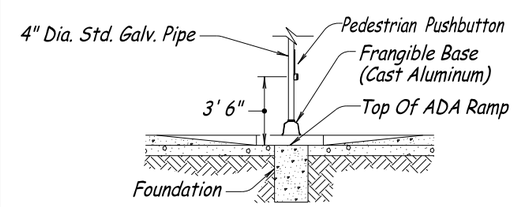

SECTION B-B

PEDESTRIAN SIGNAL PEDESTAL AT PARALLEL RAMP

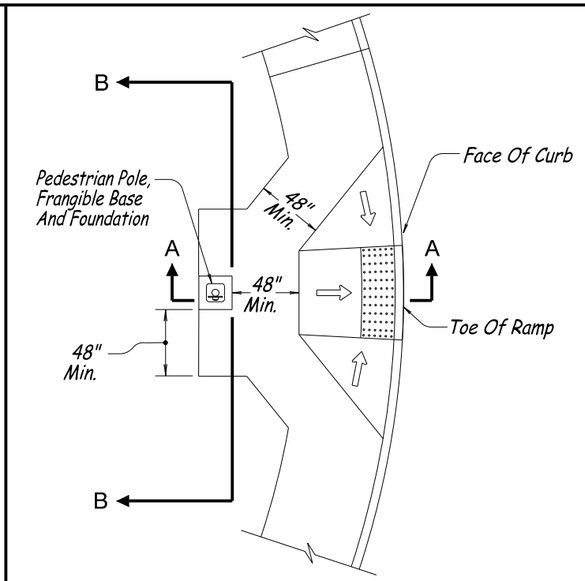

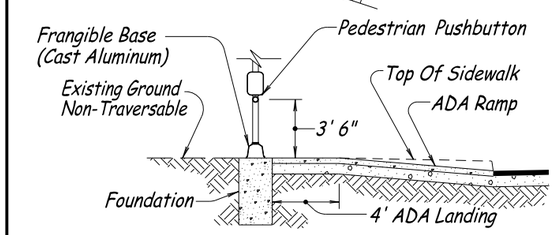

SECTION A-A

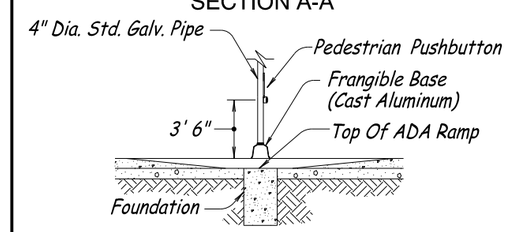

SECTION B-B

PEDESTRIAN SIGNAL PEDESTAL AT PERPENDICULAR RAMP

⇦ Direction Of Slope

Area Shown Hatched Shall NOT Be Paved.

NOTES:

1) Square Top Of Signal Pole Foundation Can Be Rotated To Match Back Of Walk.

2) For Signal Pole And Pedestrain Pole Details Not Shown See TM450, TM457, TM467 And TM650 Thru TM653.

3) For ADA Ramp Details Not Shown See RD755

CALC. BOOK NO. N/A

BASELINE REPORT DATE 07-01-15

ACCOMPANIED BY BASELINE REPORT

NOTE: All material and workmanship shall be in accordance with the current Oregon Standard Specifications

The selection and use of this Standard Drawing, while designed in accordance with generally accepted engineering principles and practices, is the sole responsibility of the user and should not be used without consulting a Registered Professional Engineer.

OREGON STANDARD DRAWINGS

PEDESTRIAN RAMP PLACEMENT DETAILS

2015

REVISIONS

DATE	DESCRIPTION
07-01-15	Changed Pedestrian Push Button from "H" Frame to Standard
---------	Pedestrian Push Button Station

TYPE 1R
Lens Arrangemnet "Single" Flashing Vehicle Signal

TYPE 1Y
Lens Arrangemnet "Single" Flashing Vehicle Signal

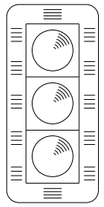

TYPE 2
Lens Arrangemnet "In Line" Standard Vehicle Signal

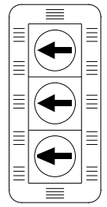

TYPE 3L
Lens Arrangement "In Line" Protected Left Turn Signal

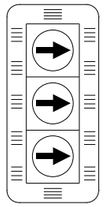

TYPE 3R
Lens Arrangement "In Line" Protected Right Turn Signal

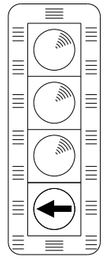

TYPE 4
Lens Arrangement "In Line" Left Turn/Through (Used For Split Phase)

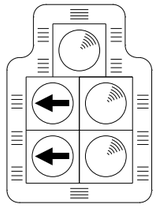

TYPE 4L
Lens Arrangement "Doghouse" Left Turn Protected / Permitted

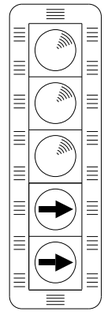

TYPE 5
Lens Arrangement "In Line" Right Turn Protected / Permitted

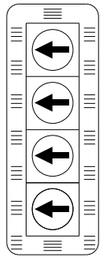

TYPE 6L
Lens Arrangement "In Line" Left Turn Protected / Permitted

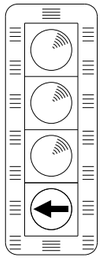

TYPE 7
Lens Arrangement "In Line" Left Turn/Through (Used For Rail Preemption Only)

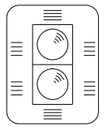

TYPE 8
Lens Arrangement "In Line" (Ramp Meter Only)

Color Indication And Nominal Lens Size:	
R	Red Circular
Y	Yellow Circular
G	Green Circular
RLTA	Red Left Turn Arrow
YLTA	Yellow Left Turn Arrow
GLTA	Green Left Turn Arrow
RRTA	Red Right Turn Arrow
YRTA	Yellow Right Turn Arrow
GRTA	Green Right Turn Arrow
FYLTA	Flashing Yellow Left Turn Arrow
GTA	Green Through Arrow
FR	Flashing Red Circular
FY	Flashing Yellow Circular

1R	1Y	2	3L	3R	4	4L		5	6L	7	8	9	10	
12" FR	12" FY	12" R	12" RLTA	12" RRTA	12" R	12" R		12" R	12" RLTA	12" R	8" R	12" R	12" R	12" R
		12" Y	12" YLTA	12" YRTA	12" Y	12" YLTA	12" Y	12" Y	12" YLTA	12" Y	8" G	12" Y		12" Y
		12" G	12" GLTA	12" GRTA	12" G	12" GLTA	12" G	12" G	12" FYLTA	12" G		12" GTA		
					12" GLTA			12" YRTA	12" GLTA	12" GLTA		12" GLTA		
								12" GRTA						

VEHICLE SIGNAL HEAD DESIGNATIONS

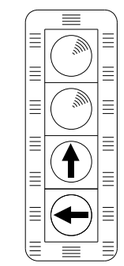

TYPE 9
Lens Arrangement "In Line" Left Turn/Through Arrow (Used When There Is A Dual Left /Through)

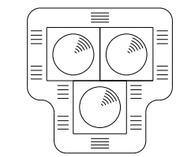

TYPE 10
Lens Arrangement "PHB" Stop / Stop Yellow

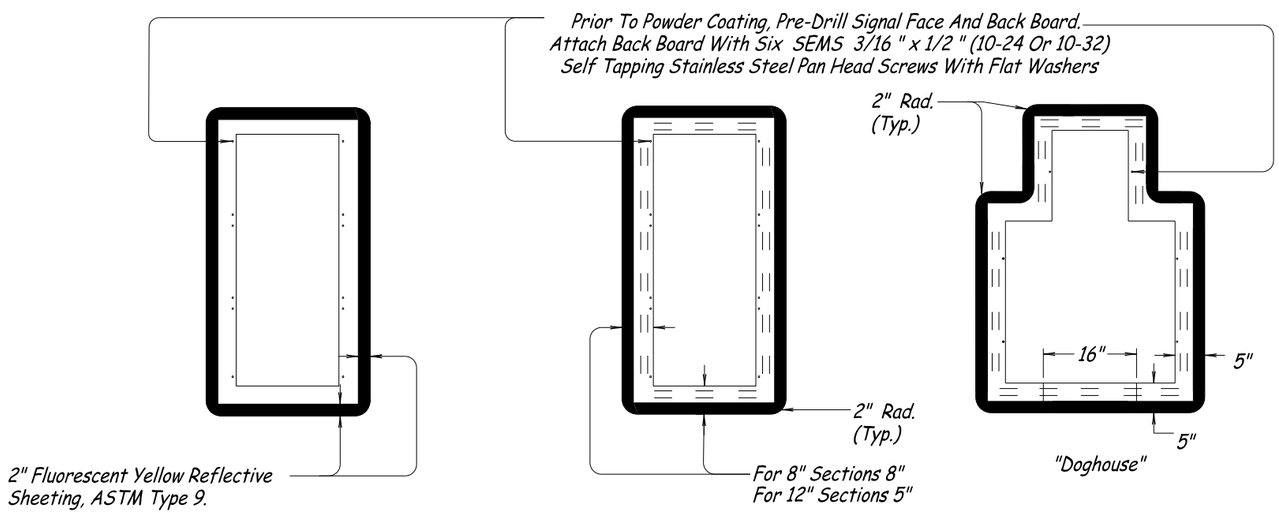

FOR 8" & 12"

FOR 12" FIVE-SECTION HEADS

B A C K B O A R D S

CALC. BOOK NO. N/A

BASELINE REPORT DATE 07-01-14

ACCOMPANIED BY BASELINE REPORT

NOTE: All material and workmanship shall be in accordance with the current Oregon Standard Specifications

The selection and use of this Standard Drawing, while designed in accordance with generally accepted engineering principles and practices, is the sole responsibility of the user and should not be used without consulting a Registered Professional Engineer.

OREGON STANDARD DRAWINGS

VEHICLE SIGNAL DETAILS

2015

REVISIONS

DATE	DESCRIPTION

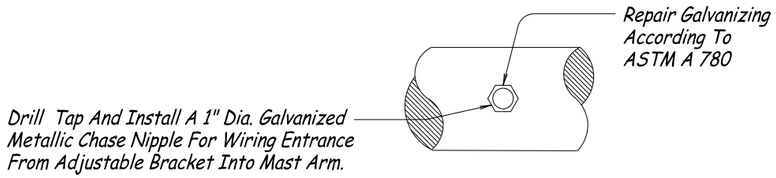

MAST ARM INSTALLATION OF ADJUSTABLE BRACKET

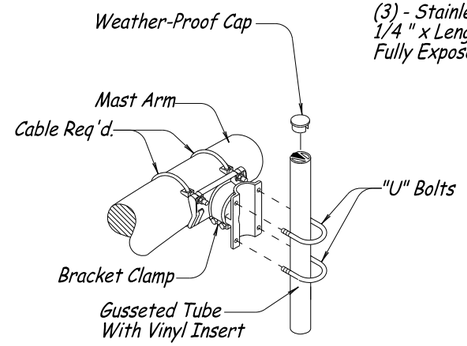

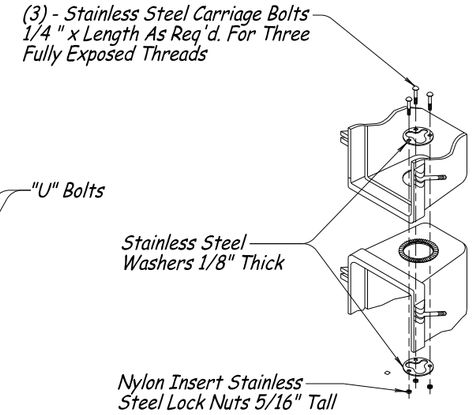

VEHICLE HEAD ASSEMBLY

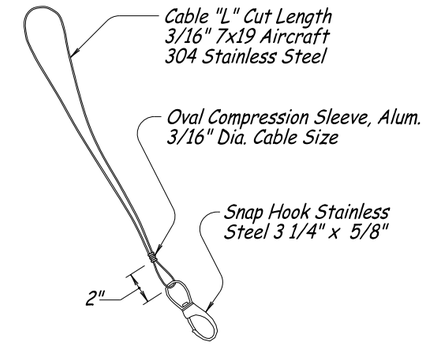

SAFETY CABLE

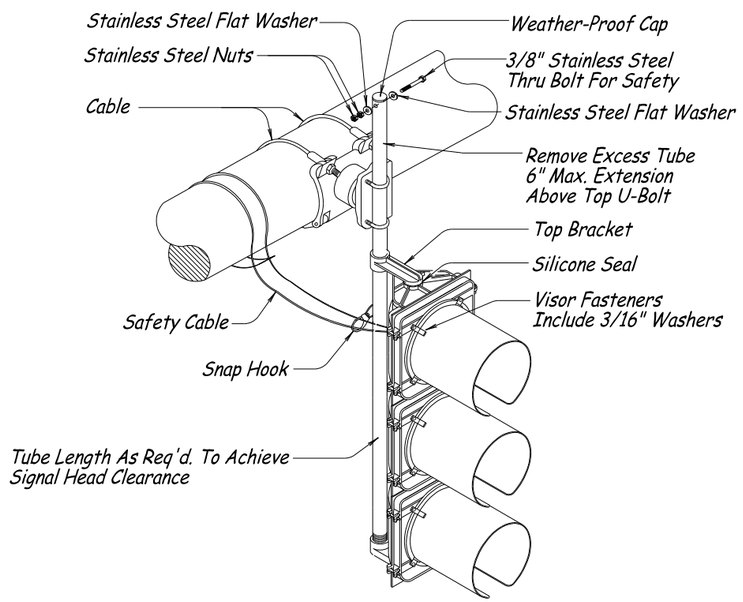

MOUNTING ABOVE BRACKET ARMS

NOTE:

This Detail Can Be Applied To Any Signal Head Configuration. If The Extension Between The Center Line Of The Mast Arm And The Top Bracket Exceeds 18" Consult Engineer For Guidance.

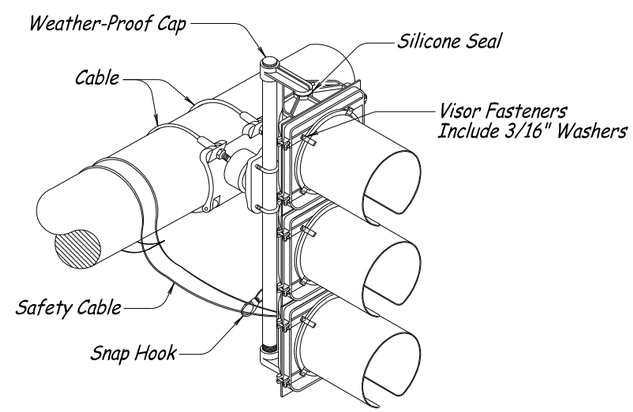

MOUNTING BETWEEN BRACKET ARMS

NOTE:

All Bolts, Nuts And Washers Shall Be Stainless Steel Unless Noted Otherwise.

See TM465 For Sign Mount Detail.

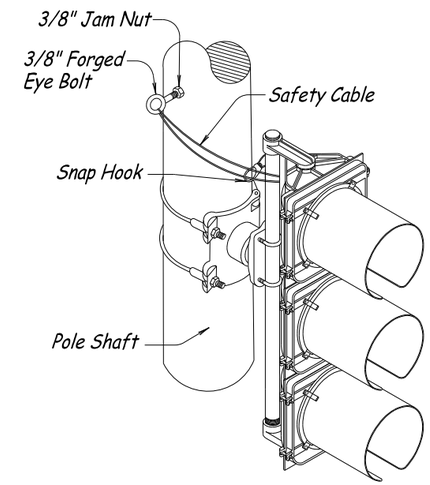

SIGNAL HEAD MOUNTING ON POLE SHAFT

Note:
Drill And Tap Pole For 3/8" Forged Eye Bolt.

CALC. BOOK NO. N/A	BASELINE REPORT DATE 12-31-12
ACCOMPANIED BY BASELINE REPORT	NOTE: All material and workmanship shall be in accordance with the current Oregon Standard Specifications

The selection and use of this Standard Drawing, while designed in accordance with generally accepted engineering principles and practices, is the sole responsibility of the user and should not be used without consulting a Registered Professional Engineer.

OREGON STANDARD DRAWINGS

ADJUSTABLE SIGNAL HEAD MOUNTING DETAILS

2015

REVISIONS

DATE	DESCRIPTION

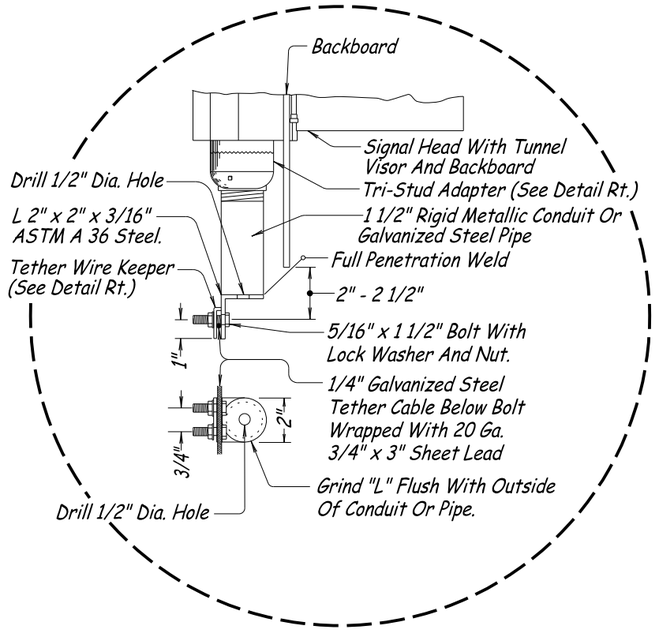

TETHER CLAMP ASSEMBLY FOR SIGNALS OR SIGNS

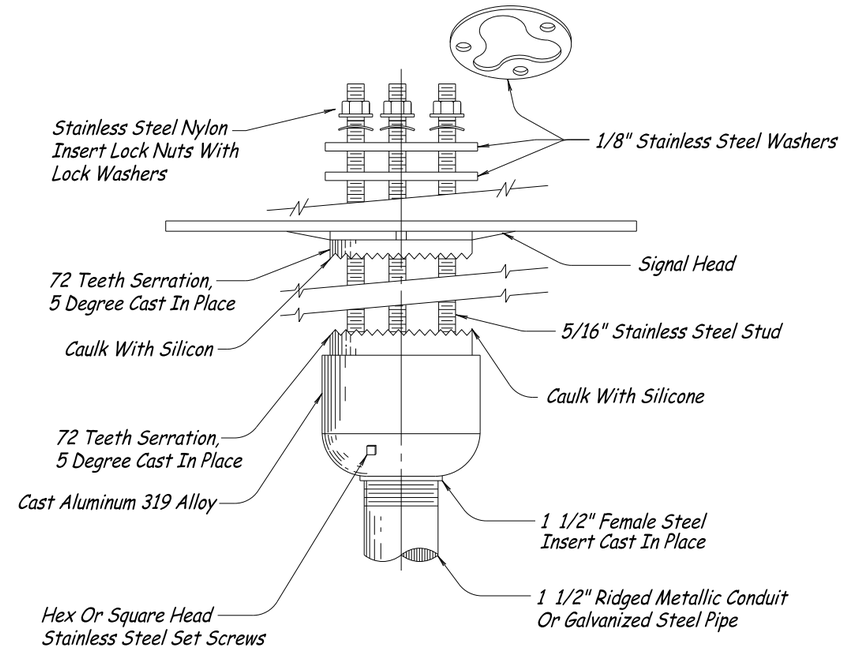

TRI-STUD ADAPTER DETAIL

(Bottom Attachment Shown, Rotate 180 Degrees For Top Attachment)

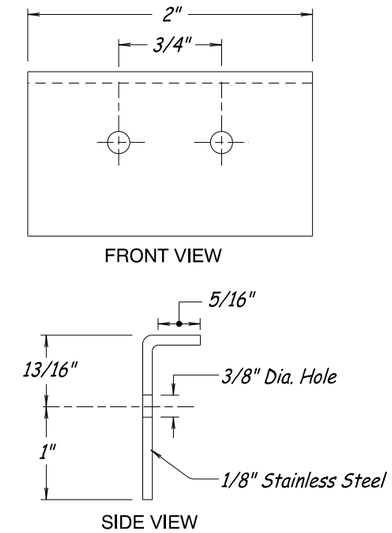

TETHER WIRE KEEPER DETAIL

GENERAL NOTES:

Galvanize All Steel Parts After Fabrication.

All Bolts, Nuts And Washers Shall Be Stainless Steel Unless Noted Otherwise.

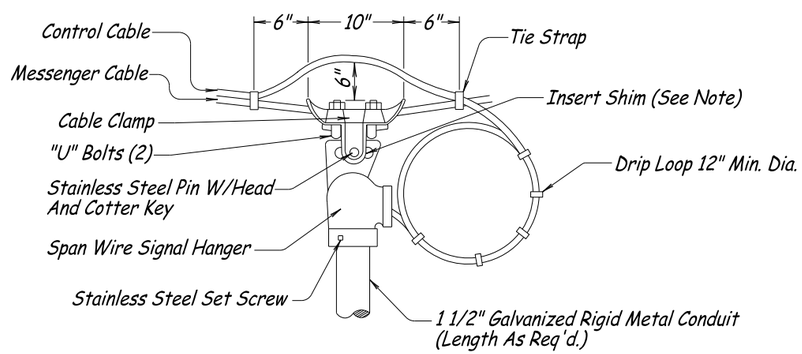

GENERAL NOTES:

All Set Screws Shall Be Drilled And Tapped Through The First Wall Of Conduit. Set Screw Shall Not Extend More Than 5/8 " Inside Conduit And Be Installed With Anti-Seize Compound.

Threaded End Of Conduit Shall Extend A Minimum Of 5/8" Into Span Wire Signal Hanger.

(Install Shim Between Cable Clamp And Span Wire Hanger To Eliminate Excess Movement Yet Allow For Moderate Sway.)

"U" Bolts, Bolts, Pins, Nuts And Washers Shall Be Stainless Steel.

MESSENGER CABLE ATTACHMENT

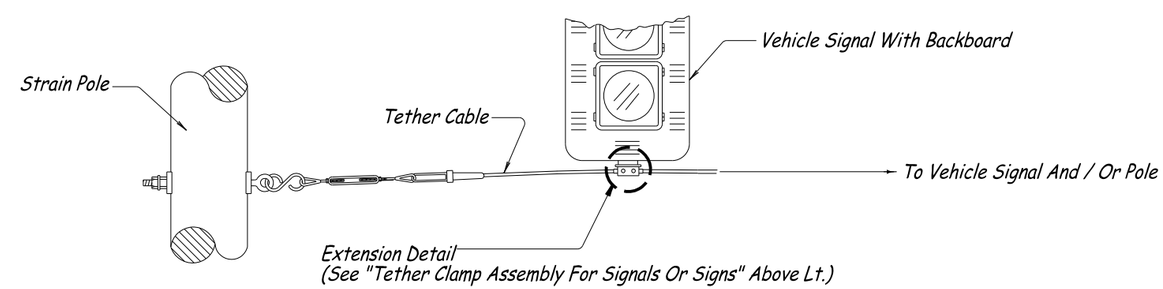

TETHER CABLE CONNECTION DETAIL

CALC. BOOK NO. N/A	BASELINE REPORT DATE 01-03-14
ACCOMPANIED BY BASELINE REPORT	NOTE: All material and workmanship shall be in accordance with the current Oregon Standard Specifications
The selection and use of this Standard Drawing, while designed in accordance with generally accepted engineering principles and practices, is the sole responsibility of the user and should not be used without consulting a Registered Professional Engineer.	OREGON STANDARD DRAWINGS SPANWIRE MOUNTING DETAILS 2015

REVISIONS

DATE	DESCRIPTION

December 1, 2015 - May 31, 2016

TM463

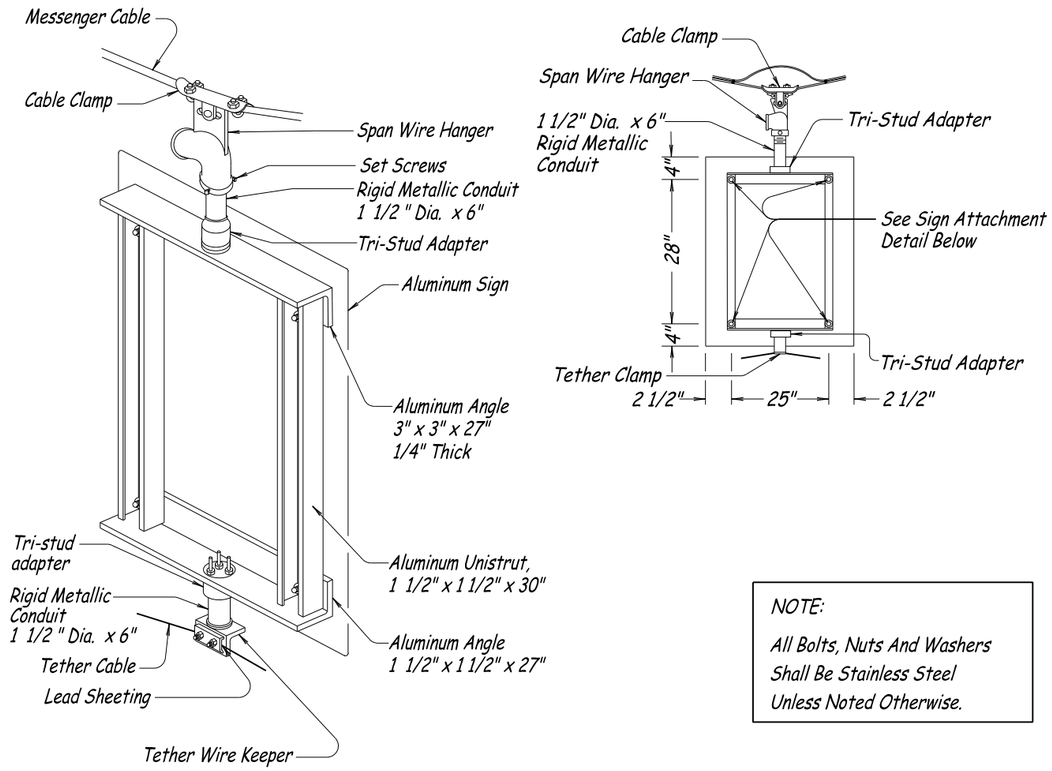

NOTE:

All Bolts, Nuts And Washers Shall Be Stainless Steel Unless Noted Otherwise.

SPANWIRE MOUNTED ALUMINUM SIGNS

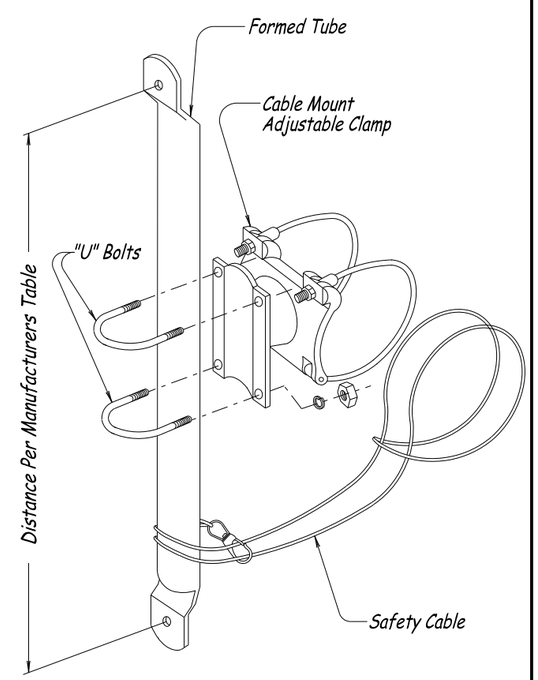

NOTE:
See TM462 For Signal Mounting Details

ADJUSTABLE BRACKET SIGN MOUNT WITH FORMED TUBE

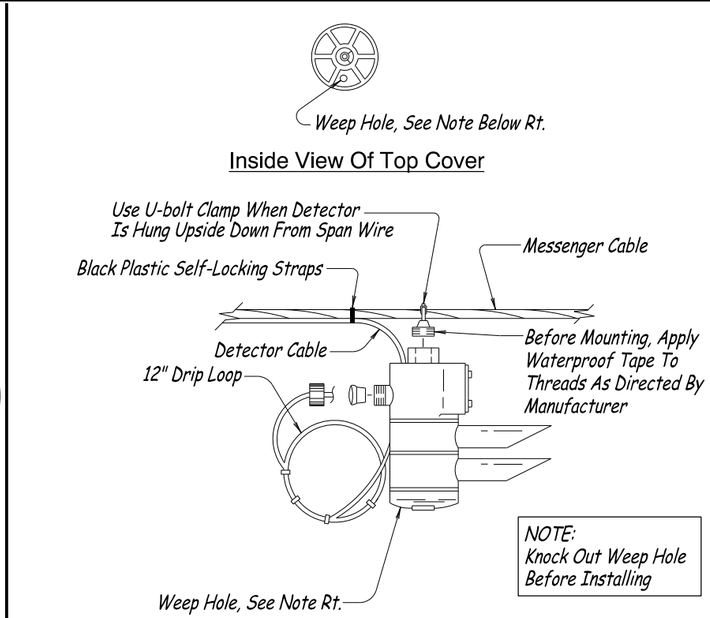

SPAN WIRE INSTALLATION

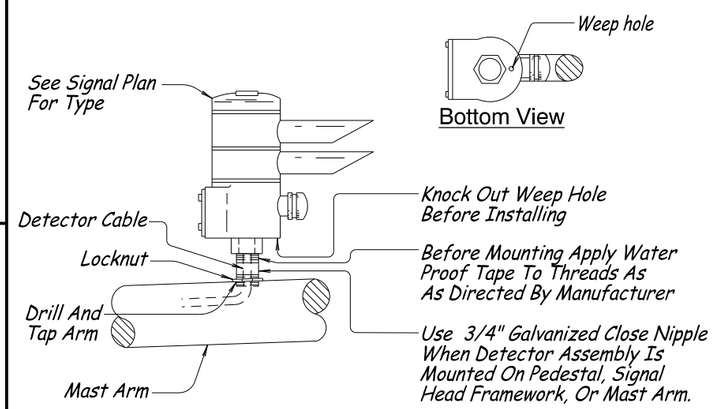

MAST ARM MOUNTING

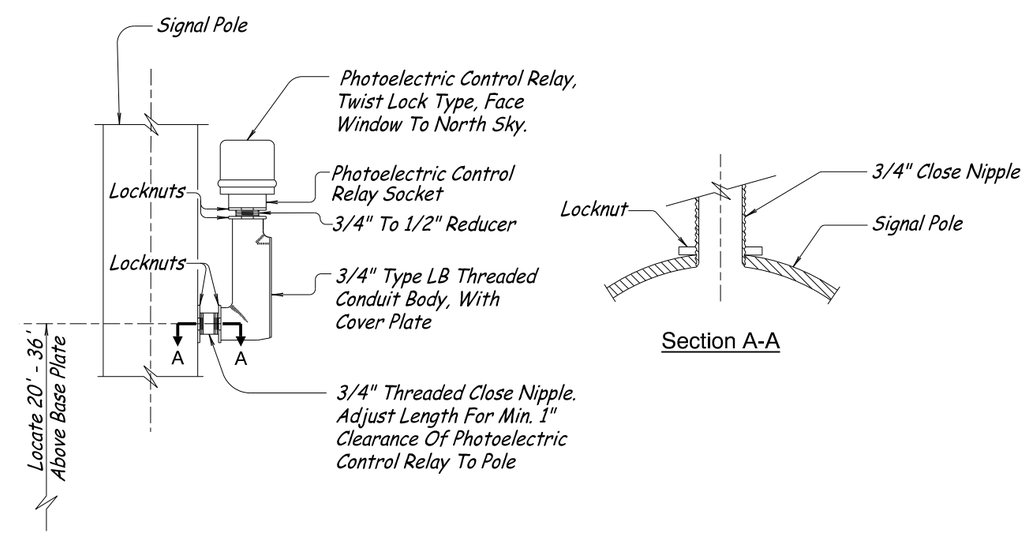

Section A-A

PHOTOELECTRIC CONTROL INSTALLATION FOR SIGNAL POLE

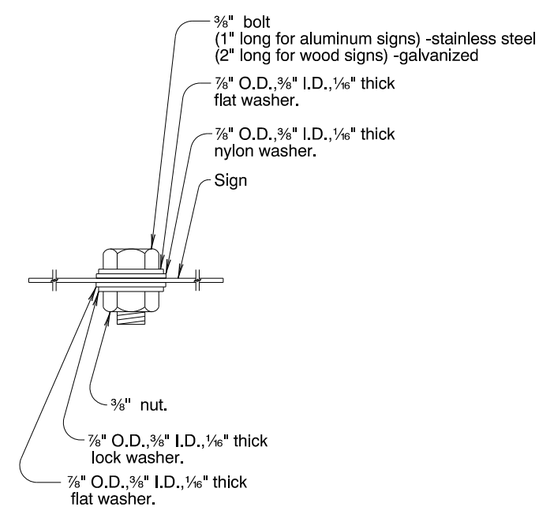

SIGN ATTACHMENT DETAIL

CALC. BOOK NO. N/A	BASELINE REPORT DATE 07-01-14
ACCOMPANIED BY BASELINE REPORT	NOTE: All material and workmanship shall be in accordance with the current Oregon Standard Specifications

The selection and use of this Standard Drawing, while designed in accordance with generally accepted engineering principles and practices, is the sole responsibility of the user and should not be used without consulting a Registered Professional Engineer.

OREGON STANDARD DRAWINGS

OVERHEAD SIGN, FIRE PREEMPTION AND PHOTOELECTRIC CONTROL DETAILS

2015

REVISIONS

DATE	DESCRIPTION

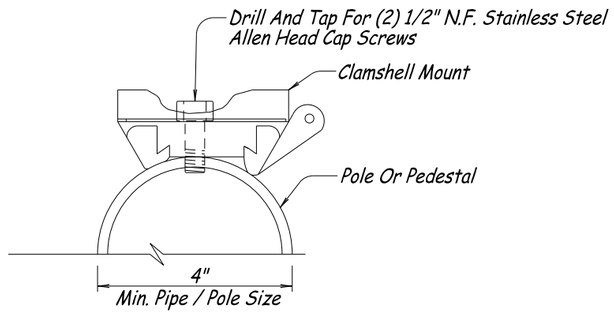

SECTION A-A

NOTES:

1. Where Two Heads Are Side Mounted On 4" Conduit, Proper Clearance Shall Be Maintained To Allow Legend To Be Fully Visible.
2. Clam Shells To Be Orientated So That The Heads Can Be Opened For Maintenance. (Verify Hinge Placement Of Clamshell).

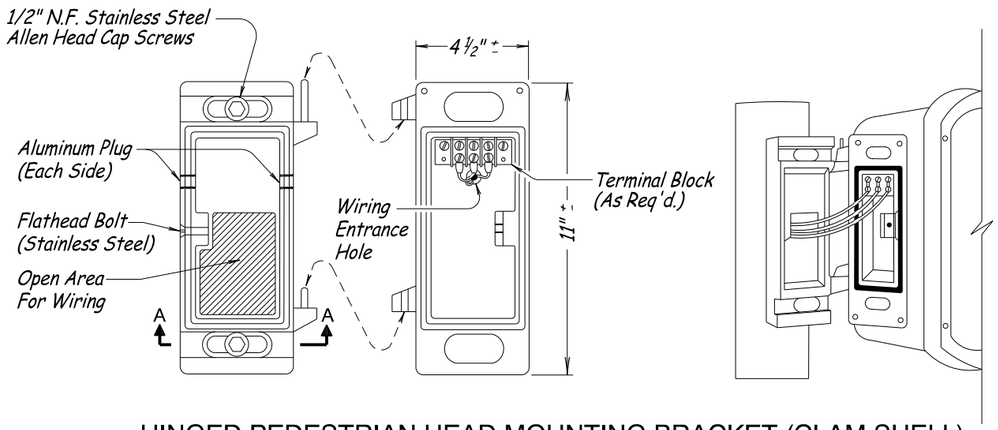

HINGED PEDESTRIAN HEAD MOUNTING BRACKET (CLAM SHELL)

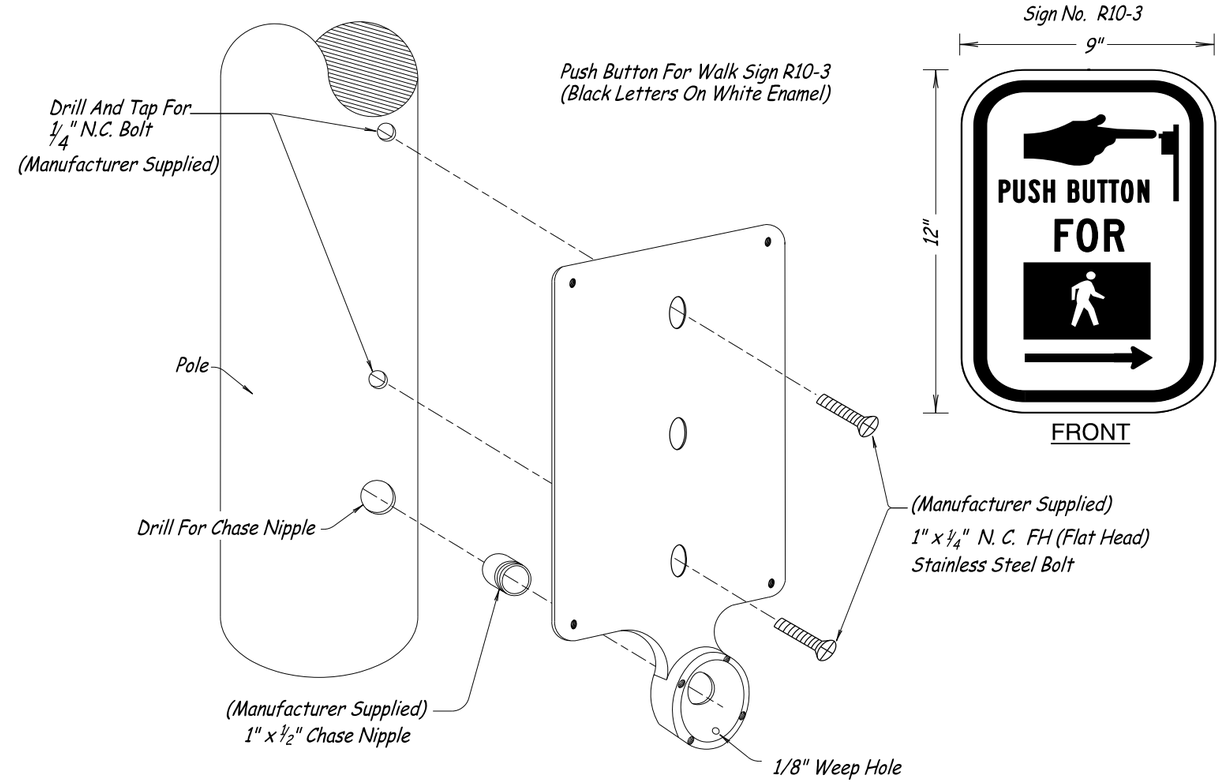

STANDARD PUSH BUTTON STATION AND INSTRUCTION SIGN

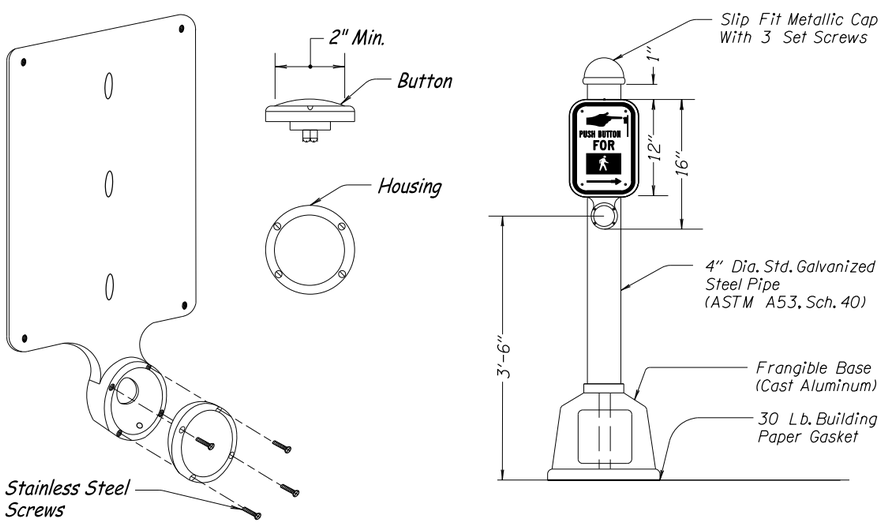

STANDARD PUSH BUTTON

Portland Orange

White

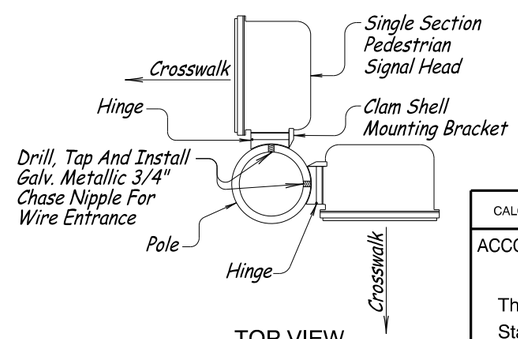

TOP VIEW

CLAM SHELL ORIENTATION

GENRAL NOTES:

All surface joints where concrete and aluminum meet shall be gasketed with 30 Lb. building paper.

All bolts, nuts and washers shall be stainless steel unless noted otherwise.

CALC. BOOK NO. N/A

BASELINE REPORT DATE 07-01-15

ACCOMPANIED BY BASELINE REPORT

NOTE: All material and workmanship shall be in accordance with the current Oregon Standard Specifications

The selection and use of this Standard Drawing, while designed in accordance with generally accepted engineering principles and practices, is the sole responsibility of the user and should not be used without consulting a Registered Professional Engineer.

OREGON STANDARD DRAWINGS
PEDESTRIAN SIGNAL
AND
PEDESTRIAN PUSH BUTTON
DETAILS

2015

REVISIONS

DATE	DESCRIPTION
07-01-15	Changed the "H" Frame Pedestrian Push Button Station
---------	to a Standard Pedestrian Push Button Station

COLOR CODE CHART
SINGLE CONDUCTOR

PHASE	FUNCTION	BASE COLOR	FIRST TRACER	SECOND TRACER
2	RED	RED	—	—
2	YELLOW	YELLOW	—	—
2	GREEN	GREEN	—	—
2S	SPARE RED	RED	GREY	—
2S	SPARE YELLOW	YELLOW	GREY	—
2S	SPARE GREEN	GREEN	GREY	—
2	WALK	BLACK	WHITE	—
2	DONT WALK	BLUE	BLACK	—
6	RED	PINK	—	—
6	YELLOW	ORANGE	—	—
6	GREEN	GREY	—	—
6S	SPARE RED	PINK	YELLOW	—
6S	SPARE YELLOW	ORANGE	YELLOW	—
6S	SPARE GREEN	GREY	YELLOW	—
6	WALK	BLACK	—	—
6	DONT WALK	BLUE	—	—
4	RED	RED	WHITE	—
4	YELLOW	YELLOW	WHITE	—
4	GREEN	GREEN	WHITE	—
4S	SPARE RED	RED	BROWN	—
4S	SPARE YELLOW	YELLOW	BROWN	—
4S	SPARE GREEN	GREEN	BROWN	—
4	WALK	TAN	—	—
4	DONT WALK	PURPLE	—	—
8	RED	RED	WHITE	BLUE
8	YELLOW	YELLOW	WHITE	BLUE
8	GREEN	GREEN	WHITE	BLUE
8S	SPARE RED	RED	PURPLE	—
8S	SPARE YELLOW	YELLOW	PURPLE	—
8S	SPARE GREEN	GREEN	PURPLE	—
8	WALK	TAN	BLUE	—
8	DONT WALK	PURPLE	BLUE	—
2	PUSHBUTTON	TAN	WHITE	—
6	PUSHBUTTON	PURPLE	WHITE	—
4	PUSHBUTTON	BROWN	—	—
8	PUSHBUTTON	BROWN	BLUE	—
1	RED	PINK	WHITE	—
1	YELLOW	ORANGE	WHITE	—
1	GREEN	GREY	WHITE	—
1	FLASH YELLOW	ORANGE	GREY	BLUE
1S	SPARE RED	PINK	PURPLE	—
1S	SPARE YELLOW	ORANGE	PURPLE	—
1S	SPARE GREEN	GREY	PURPLE	—
5	RED	RED	BLACK	—
5	YELLOW	YELLOW	BLACK	—
5	GREEN	GREY	BLACK	—
5	FLASH YELLOW	YELLOW	GREY	BLUE
5S	SPARE RED	RED	BLUE	—
5S	SPARE YELLOW	YELLOW	BLUE	—
5S	SPARE GREEN	GREY	BLUE	—
3	RED	PINK	WHITE	BLUE
3	YELLOW	ORANGE	WHITE	BLUE
3	GREEN	GREY	WHITE	BLUE
3	FLASH YELLOW	ORANGE	BROWN	BLUE
3S	SPARE RED	PINK	BROWN	—
3S	SPARE YELLOW	ORANGE	BROWN	—
3S	SPARE GREEN	GREY	BROWN	—
7	RED	RED	BLACK	BLUE
7	YELLOW	YELLOW	BLACK	BLUE
7	GREEN	GREEN	BLACK	BLUE
7	FLASH YELLOW	YELLOW	BROWN	BLUE
7S	SPARE RED	RED	PINK	—
7S	SPARE YELLOW	YELLOW	PINK	—
7S	SPARE GREEN	GREEN	PINK	—
ALL	PUSHBUTTON COMMON	BROWN	WHITE	—
ALL	SIGNAL HEAD NEUTRAL	WHITE	—	—

All Wire Tracer Colors Are To Have Recognizable Paint Strips, Marked Full Length.

COLOR CODE CHART FOR CONTROL CABLE

7 CONDUCTOR CONTROL CABLE			PEDESTRIAN PHASES	VEHICLE PHASES	SIGNAL HEAD TYPES			
CONDUCTOR NUMBER	BASE COLOR	FIRST TRACER	1 Pedestrian Phase	1 Vehicle Phase	6L	4L, 5 or 7	2, 3L, 3R, 4 or 9	10
1	WHITE	—	NEUTRAL	NEUTRAL	NEUTRAL	NEUTRAL	NEUTRAL	NEUTRAL
2	BLACK	—	WALK	YELLOW	YELLOW	YELLOW	YELLOW	YELLOW
3	RED	—	DONT WALK	RED	RED	RED	RED	RED 1
4	ORANGE	—	P.B. COMMON	SPARE	FLASHING YELLOW	TURN YELLOW	SPARE	RED 2
5	GREEN	—	PUSHBUTTON	GREEN	GREEN	GREEN	GREEN	SPARE
6	BLUE	—	SPARE	SPARE	SPARE	TURN GREEN	SPARE	SPARE
7	WHITE	BLACK	SPARE	SPARE	SPARE	SPARE	SPARE	SPARE

Type 8 signal head indications for ramp meters shall be wired from the type 2 signal head terminal block for the same phase.

Mark Phase Number On Cable With Permanent Tags. Use Handheld Labeler (Brady IDXPERT With XC-1500-580-WT-BK Tags Or Approved Equal).

At Existing Installations The Contractor Is Responsible For the Re-wiring And Re-numbering Of New And Existing Control Cables, In Junction Boxes And Cabinet.

NOTES:

All Tracer Colors To Be Spiraled At All Exposed Locations. Wiring For Overlaps Shall Be Labeled (OLA,OLB,OLC,OLD) On All Ends. Unused Colors From Single Conductor Chart, With Additional Tracers, May Be Used For Overlaps

Tone Wire For Conduit Locate's:

 # 16 AWG THWN Orange Base With Blue Tracer

ODD PHASE PED WIRE COLOR CODE		
STANDARD COLOR CODE FOR THE WIRING OF PEDESTRIAN PHASES 1, 3, 5, AND 7. USE THE FOLLOWING:		
PHASE 1 PED	PHASE 2 PED	COLOR CODE WITH THE ADDITION OF A YELLOW TRACER
PHASE 3 PED	PHASE 4 PED	
PHASE 5 PED	PHASE 6 PED	
PHASE 7 PED	PHASE 8 PED	

CALC. BOOK NO. N/A

BASELINE REPORT DATE 12-31-12

ACCOMPANIED BY BASELINE REPORT

NOTE: All material and workmanship shall be in accordance with the current Oregon Standard Specifications

The selection and use of this Standard Drawing, while designed in accordance with generally accepted engineering principles and practices, is the sole responsibility of the user and should not be used without consulting a Registered Professional Engineer.

OREGON STANDARD DRAWINGS

COLOR CODE CHARTS

2015

REVISIONS

DATE	DESCRIPTION

December 1, 2015 - May 31, 2016

TM470

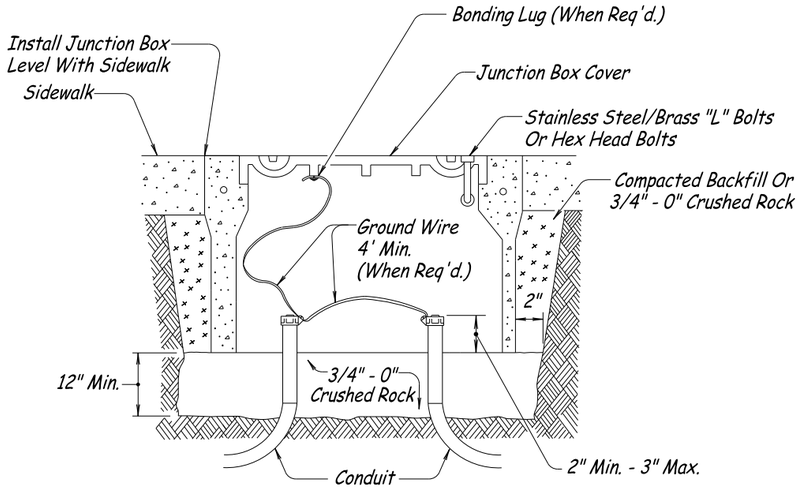

INSTALLATION IN SIDEWALK OR AT BACK OF CURB

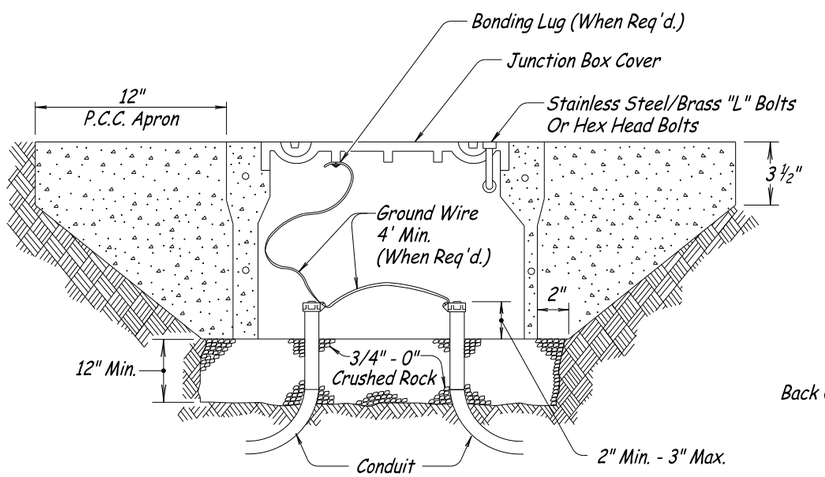

INSTALLATION WITH PORTLAND CEMENT CONCRETE APRON

(For Incidental Travel Areas Only; Gravel Shoulders, Behind Guardrail, Etc.)

NOTE:

Use Stainless Steel / Brass Bolts Or Hex Head Bolts To Secure Lid.

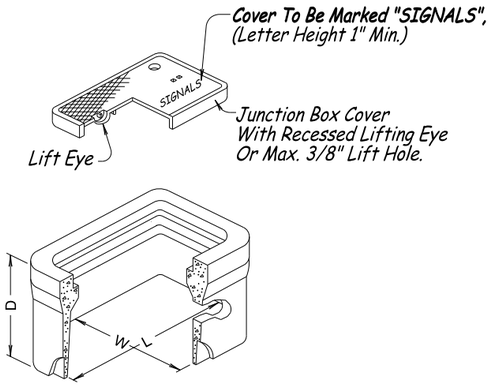

JUNCTION BOX

Not To Be Used In Travel Lanes, Shoulders Or Areas Exposed To Traffic.
For Location And Junction Box Dimensions, See Plans.

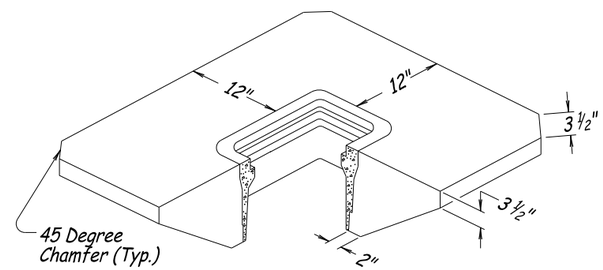

PORTLAND CEMENT CONCRETE APRON

(Approx. 7ft^3 Concrete In Neat Section)

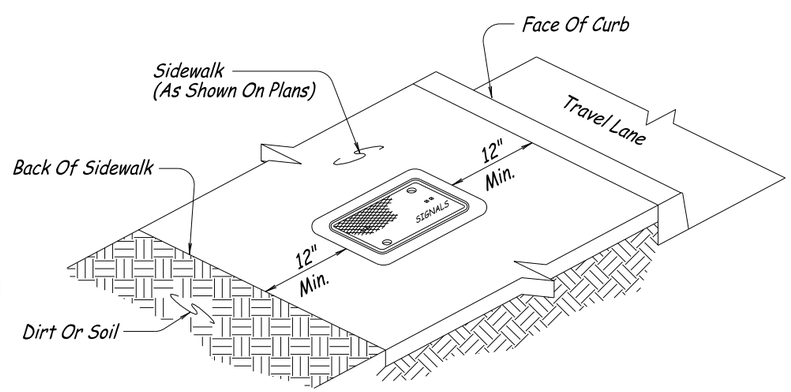

JUNCTION BOX PLACEMENT WITHIN SIDEWALKS

(Junction Boxes To Be Located Only In Flat Areas Of Sidewalks, Concrete Junction Boxes Are Not To Be Installed In Slopes Of Ramps Or Driveways)

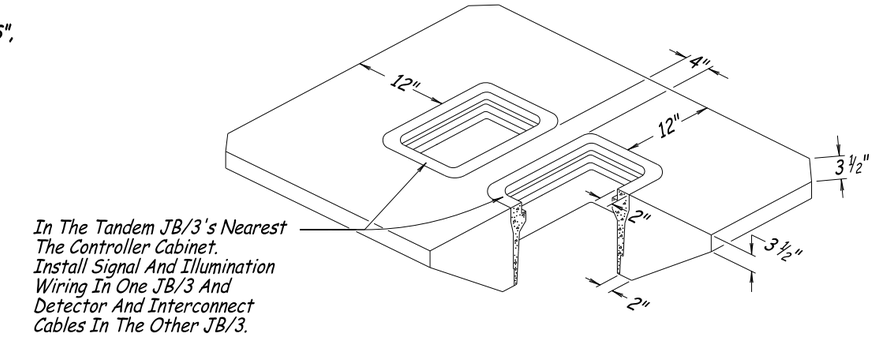

PORTLAND CEMENT CONCRETE APRON FOR TANDEM JB/3A JUNCTION BOXES

(Approx. 10ft^3 Concrete In Neat Section)

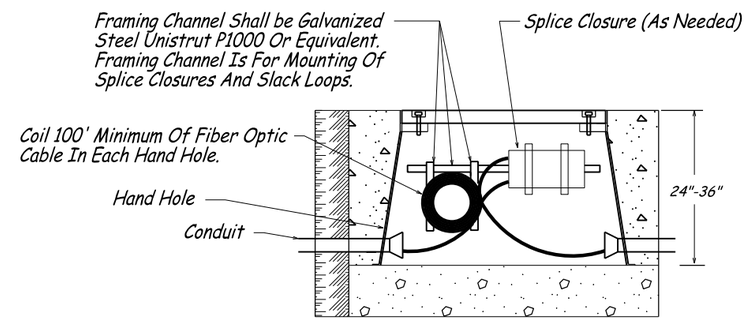

INSTALLATION OF HAND HOLE

Type	L	W	D	Type	L	W	D
JB1	17"	10"	12"	HH-1	24"	30"	24"
JB2	22"	12"	12"	HH-2	30"	48"	24"
JB3	30"	17"	12"	HH-3	30"	48"	36"

JUNCTION BOX/ HAND HOLE DIMENSION TABLE

CALC. BOOK NO. N/A

BASELINE REPORT DATE 07-01-14

ACCOMPANIED BY BASELINE REPORT

NOTE: All material and workmanship shall be in accordance with the current Oregon Standard Specifications

The selection and use of this Standard Drawing, while designed in accordance with generally accepted engineering principles and practices, is the sole responsibility of the user and should not be used without consulting a Registered Professional Engineer.

OREGON STANDARD DRAWINGS

TRAFFIC SIGNAL JUNCTION BOXES/HAND HOLES

2015

REVISIONS

DATE	DESCRIPTION

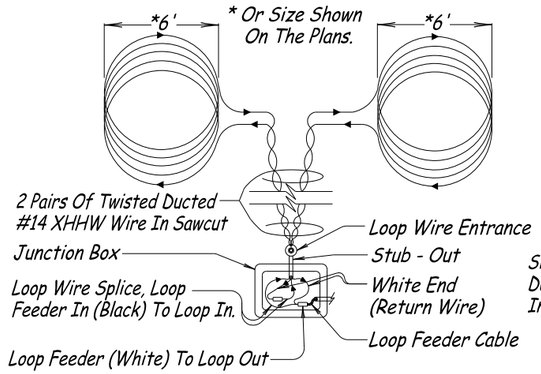

TWO LOOPS IN SERIES
(TYPICAL WIRING DIAGRAM)

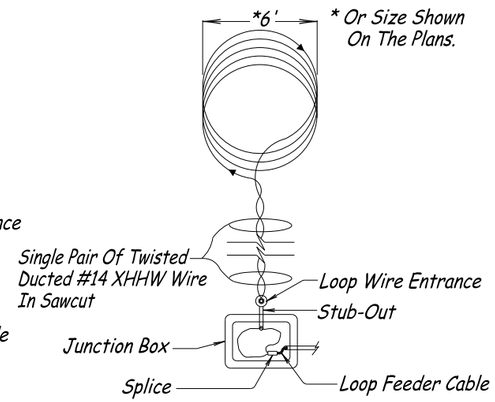

SINGLE LOOP

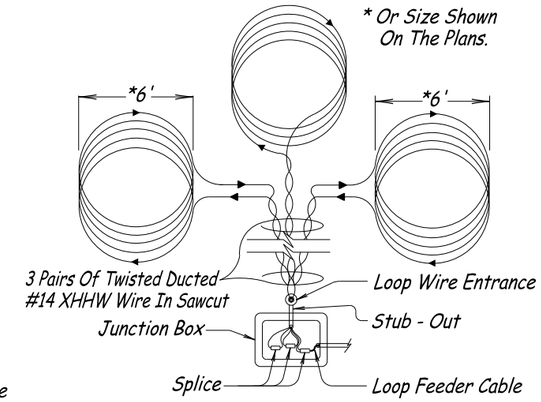

THREE LOOPS IN SERIES

LOOP DETECTOR WINDING PATTERN

(Arrows Indicate Direction Of Loop Winding)

Loops Shall Be Round Or Square With 5 Turns Of Ducted No. 14 XHHW Stranded Wire Centered In The Traffic Lane Or As Shown On Plans. Loop Wire Shall Be Twisted 4 To 6 Turns Per Foot Between Loop And Junction Box. All Loops Shall Be Individually Wired As Shown.

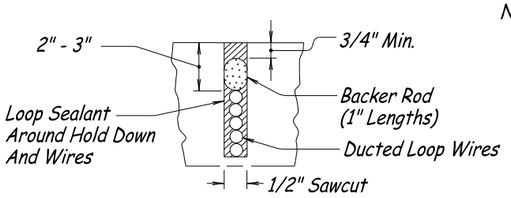

SAWCUT CROSS SECTION

LOOP WIRE INSTALLATION IN EXISTING CONCRETE OR STANDARD ASPHALT MIXES

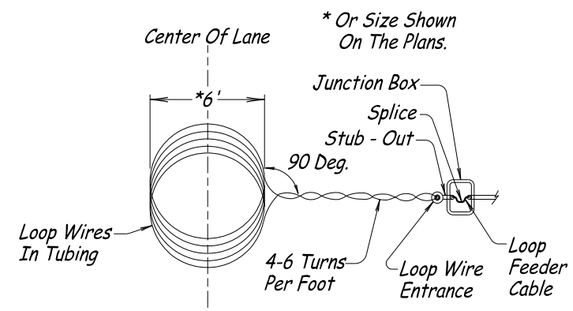

ROUND LOOP LAYOUT

Use Round Loop As Shown On Plans

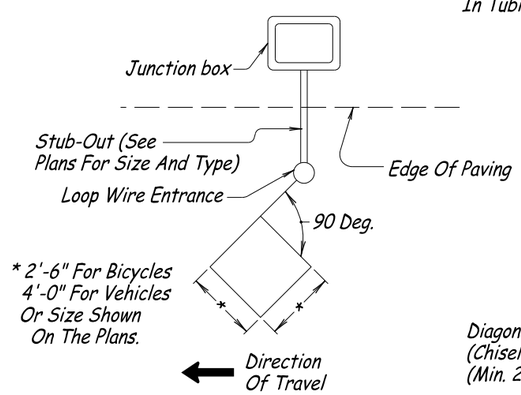

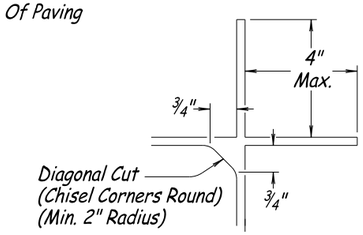

DIAMOND LOOP LAYOUT

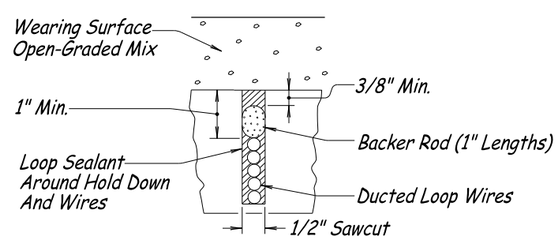

SAWCUT CROSS SECTION

LOOP WIRE INSTALLATION IN BASE LIFT (OR AFTER GRINDING). PRIOR TO PLACEMENT OF OPEN-GRADED MIX FOR WEARING SURFACE.

(If Placed On Open-Graded Mix, Install 5/8" Deeper And Leave Loop Sealant Down 1/2 "- 5/8 " From AC Surface. DO NOT Totally Fill Saw Slot.)

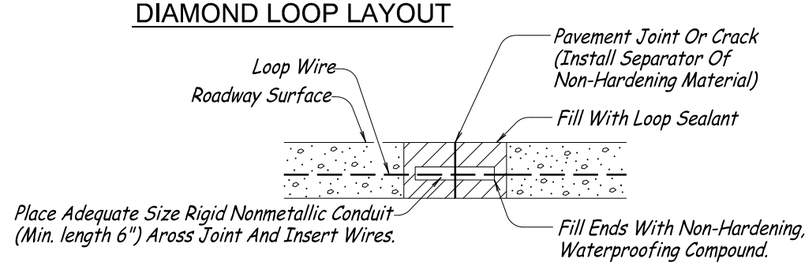

PAVEMENT JOINT AND CRACK CROSSING DETAIL

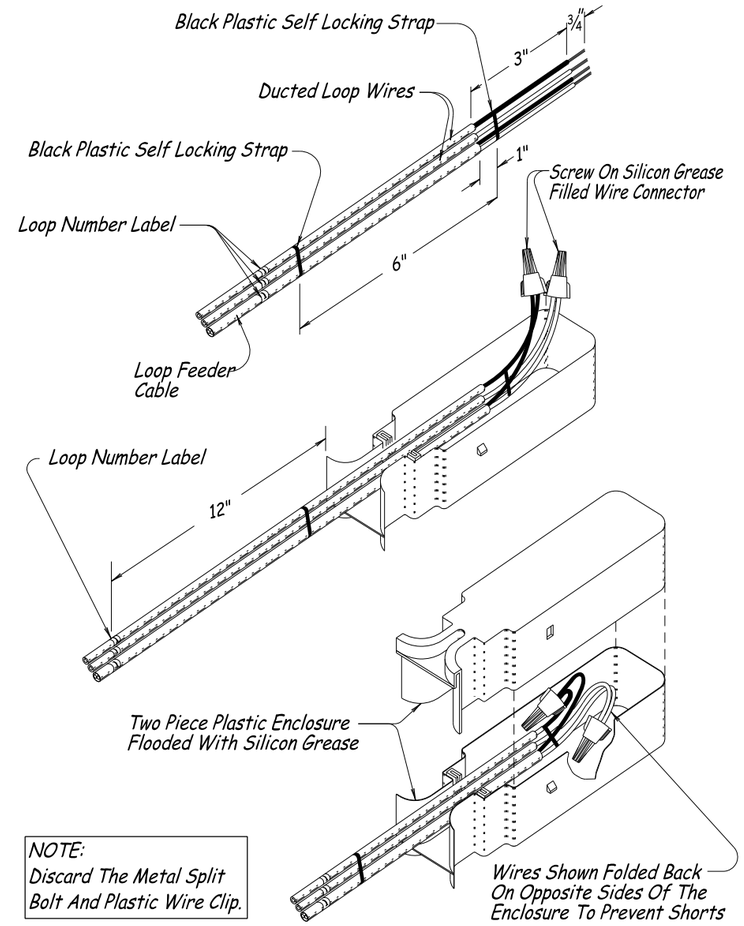

NOTE:
Discard The Metal Split Bolt And Plastic Wire Clip.

LOOP WIRE TO LOOP FEEDER SPLICES

Mark Loop Number On Loop Wire And Loop Feeder With Permanent Tags. Use Hand-held Labeler (Brady IDXPERT With XC-1500-580-WT-BK Tags, Or Approved Equal).

At Existing Installations The Contractor Is Responsible For Re-wiring And Re-numbering Of New And Existing Detector Loops And Loop Feeders, In JunctionBoxes And Cabinet, To Match Wiring Diagram.

CALC. BOOK NO. N/A	BASELINE REPORT DATE 07-01-14
ACCOMPANIED BY BASELINE REPORT	NOTE: All material and workmanship shall be in accordance with the current Oregon Standard Specifications
The selection and use of this Standard Drawing, while designed in accordance with generally accepted engineering principles and practices, is the sole responsibility of the user and should not be used without consulting a Registered Professional Engineer.	OREGON STANDARD DRAWINGS LOOP DETAILS 2015

REVISIONS

DATE	DESCRIPTION

December 1, 2015 - May 31, 2016

TM475

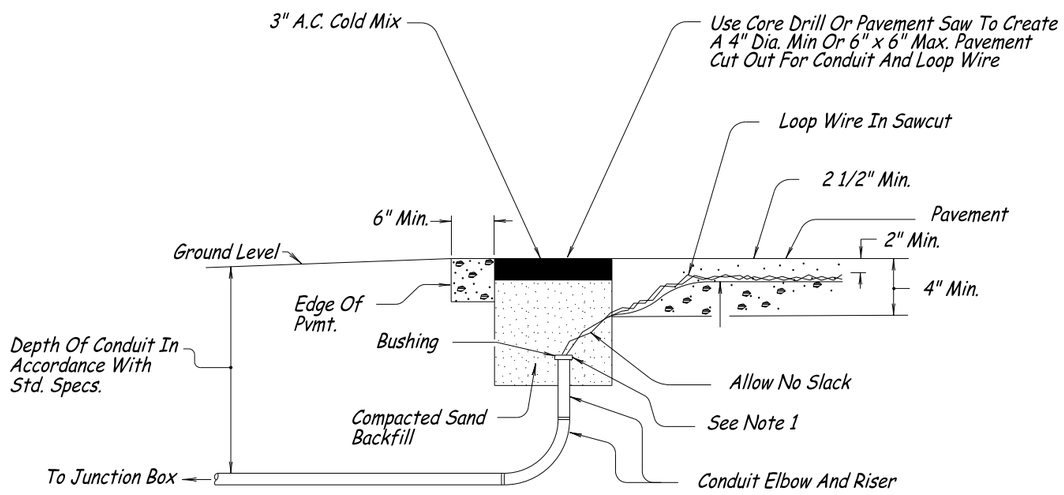

UNCURBED SECTION

On Monolithic Curbs, Locate Loop Entrance In Pavement At The Edge Of Concrete Gutter (All Other Notes Apply As Above)

SAND POCKET OPTION

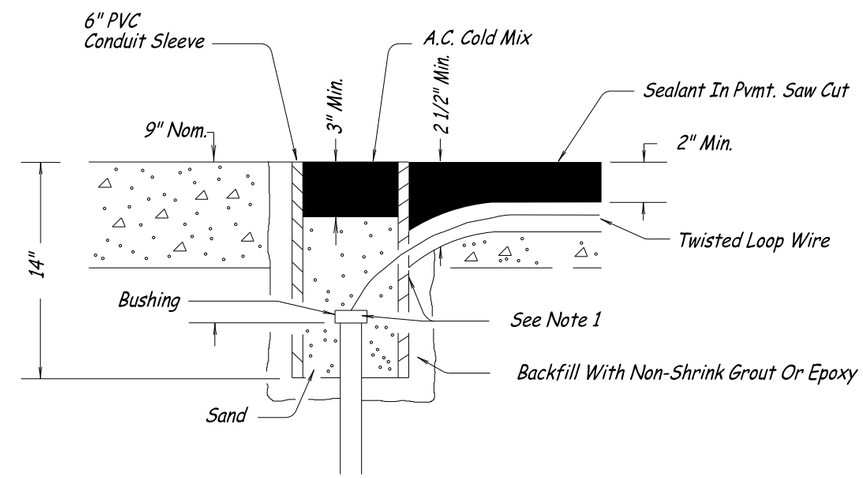

PVC CONDUIT OPTION

LOOP WIRE ENTRANCES

SAND POCKET OPTION OR P.V.C. CONDUIT INTALLATION NOTES:

1.) Install Conduit Plug To Each End Of Conduit Before Installing Sand And A.C.

2.) Elbows And Risers For Conduit Back Into The First Junction Box May Be Any Rigid Non-Metallic Conduit.

CALC. BOOK NO. N/A

BASELINE REPORT DATE 12-31-13

ACCOMPANIED BY BASELINE REPORT

NOTE: All material and workmanship shall be in accordance with the current Oregon Standard Specifications

The selection and use of this Standard Drawing, while designed in accordance with generally accepted engineering principles and practices, is the sole responsibility of the user and should not be used without consulting a Registered Professional Engineer.

OREGON STANDARD DRAWINGS

LOOP ENTRANCE DETAILS

2015

REVISIONS

DATE	DESCRIPTION

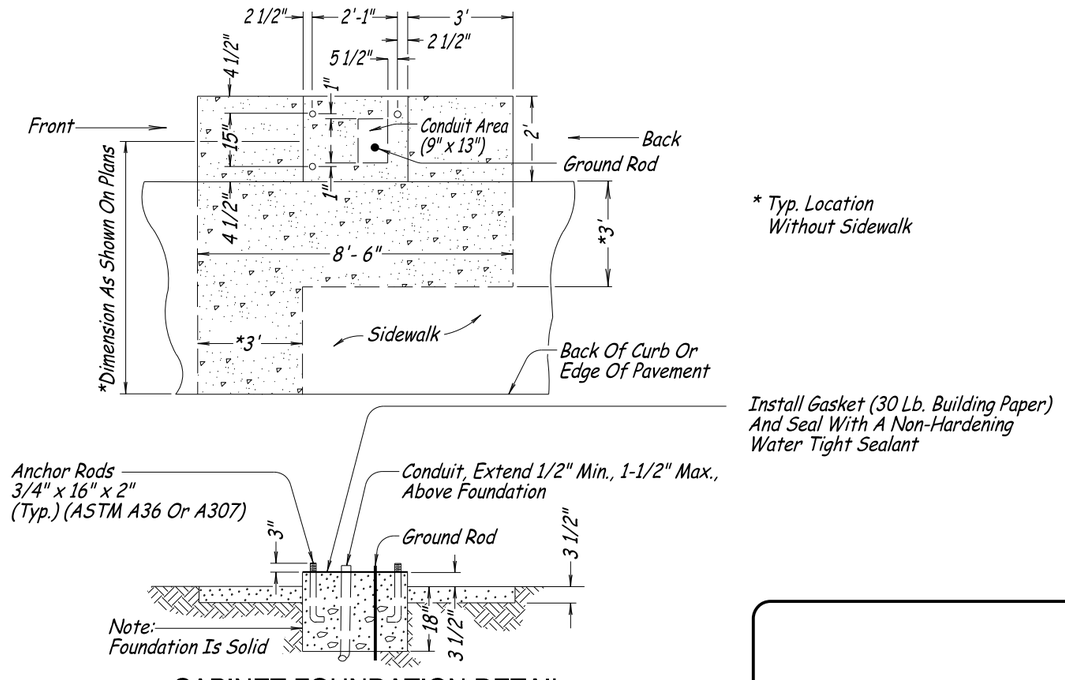

* Typ. Location
Without Sidewalk

CABINET FOUNDATION DETAIL

(Model 332, 334, And 340 Cabinets)

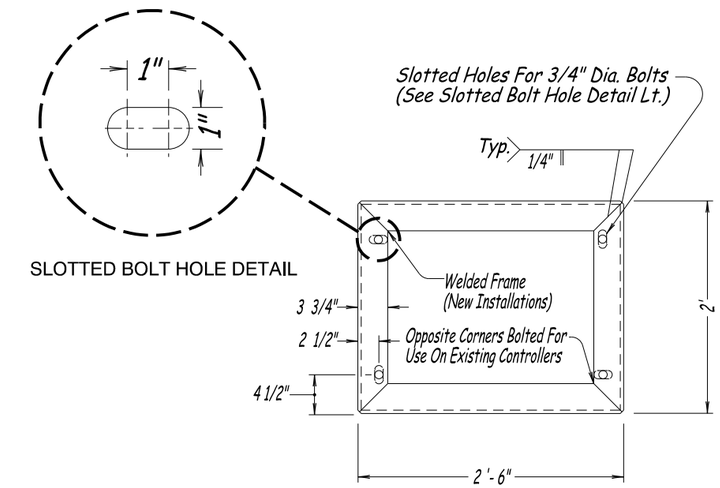

RISER FRAME

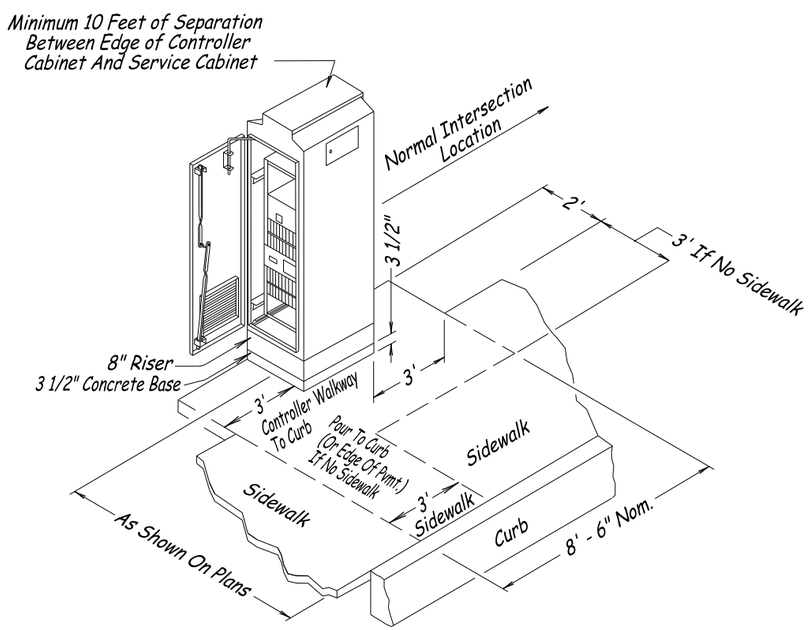

CABINET SITE LAYOUT

(Model 332, 334, And 340 Cabinets)

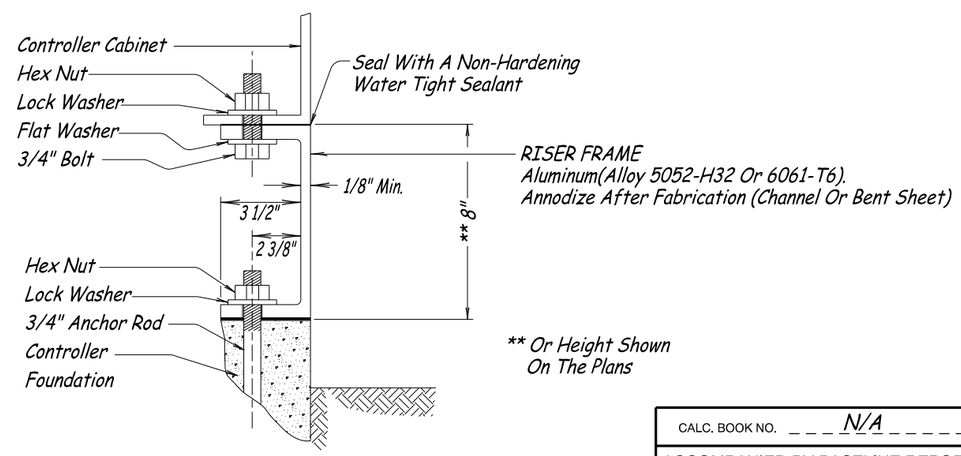

RISER FRAME CONNECTION DETAIL

332, 334, AND 340 CABINET RISER FRAME

GENERAL NOTES:

Separate The Controller Cabinet And The Service Cabinet By 10 Feet Or More.

All Surface Joints Where Concrete And Aluminum Meet Shall Be Gasketed With 30 Lb. Building Paper.

All Bolts, Nuts And Washers Shall Be Galvanized Steel Unless Noted Otherwise.

Stainless Steel Or Galvanized Steel May Be Used For Mounting Cabinet To Riser Frame.

CALC. BOOK NO. N/A	BASELINE REPORT DATE 01-03-14
ACCOMPANIED BY BASELINE REPORT	NOTE: All material and workmanship shall be in accordance with the current Oregon Standard Specifications

The selection and use of this Standard Drawing, while designed in accordance with generally accepted engineering principles and practices, is the sole responsibility of the user and should not be used without consulting a Registered Professional Engineer.

OREGON STANDARD DRAWINGS

CONTROLLER CABINET AND FOUNDATION DETAILS

2015

REVISIONS

DATE	DESCRIPTION

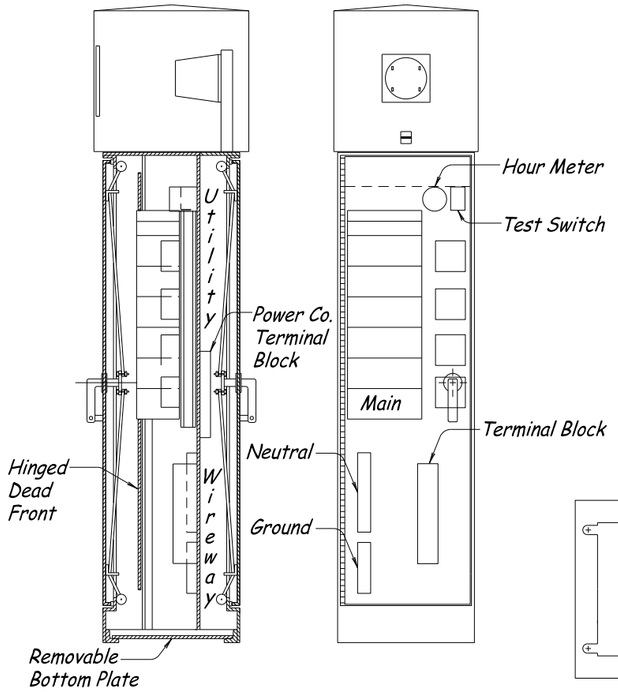

SIDE VIEW

FRONT VIEW

BASE MOUNTED SERVICE & CONTROL CABINET WITH METER

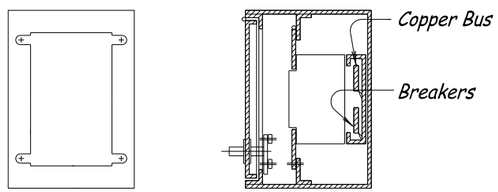

BASE MOUNTING

HORIZONTAL SECTION

BASE MOUNTED SERVICE & CONTROL CABINET WITHOUT METER

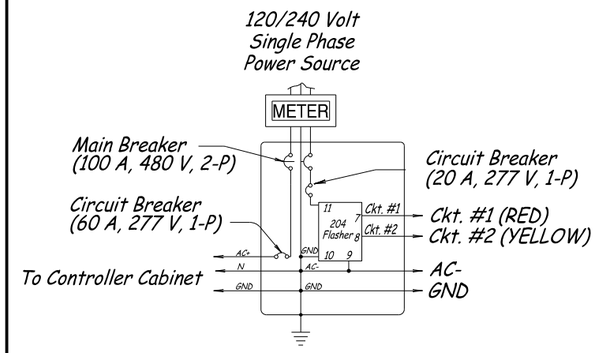

SERVICE CABINET WIRING WITH FLASHER BMCF

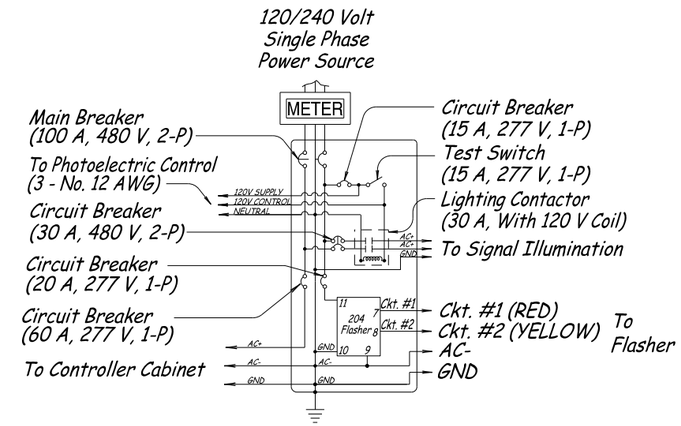

SERVICE CABINET WIRING FOR SIGNAL, FLASHER & 240 VOLT ILLUMINATION BMCFL

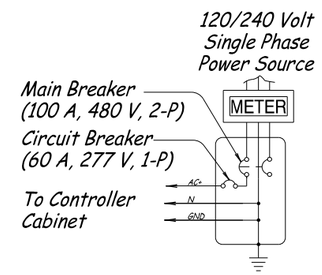

SERVICE CABINET WIRING FOR 120/240 VOLT SIGNAL SERVICE BMC

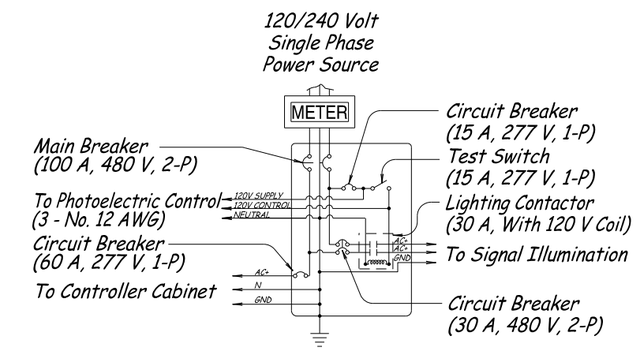

SERVICE CABINET WIRING WITH 240 VOLT ILLUMINATION BMCL

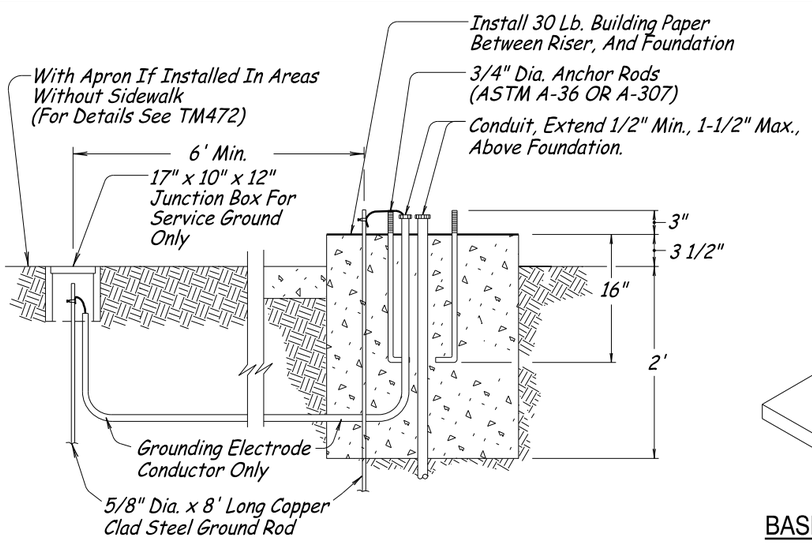

BASE MOUNTED SERVICE & CONTROL CABINET FOUNDATION

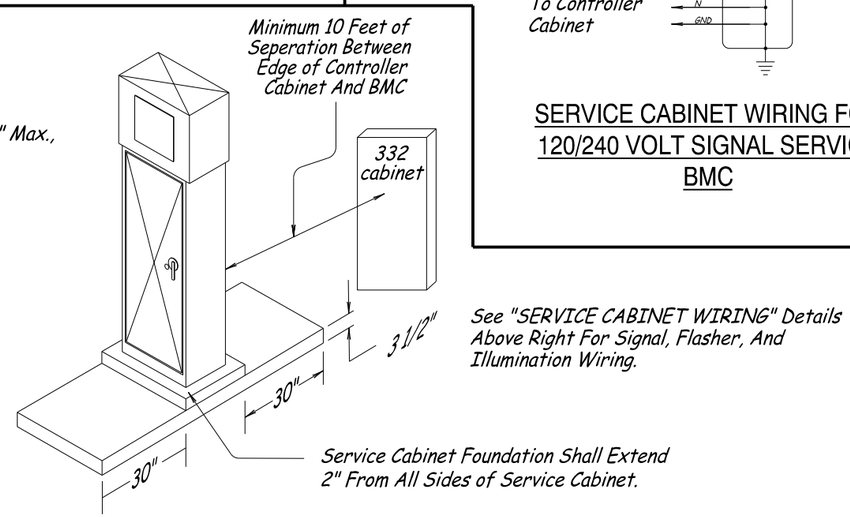

See "SERVICE CABINET WIRING" Details Above Right For Signal, Flasher, And Illumination Wiring.

BASE MOUNTED CABINET FOUNDATION WITH LANDINGS

CALC. BOOK NO. N/A

BASELINE REPORT DATE 07-01-15

ACCOMPANIED BY BASELINE REPORT

NOTE: All material and workmanship shall be in accordance with the current Oregon Standard Specifications

The selection and use of this Standard Drawing, while designed in accordance with generally accepted engineering principles and practices, is the sole responsibility of the user and should not be used without consulting a Registered Professional Engineer.

OREGON STANDARD DRAWINGS

SERVICE CABINETS AND SERVICE CABINET WIRING DETAILS

2015

REVISIONS

DATE	DESCRIPTION
07-01-15	Added a Circuit for the Controller Cabinet to both the BMCF and BMCFL.
---------	Enlarged the Service Cabinet Foundation by 2 Inches on All Sides.

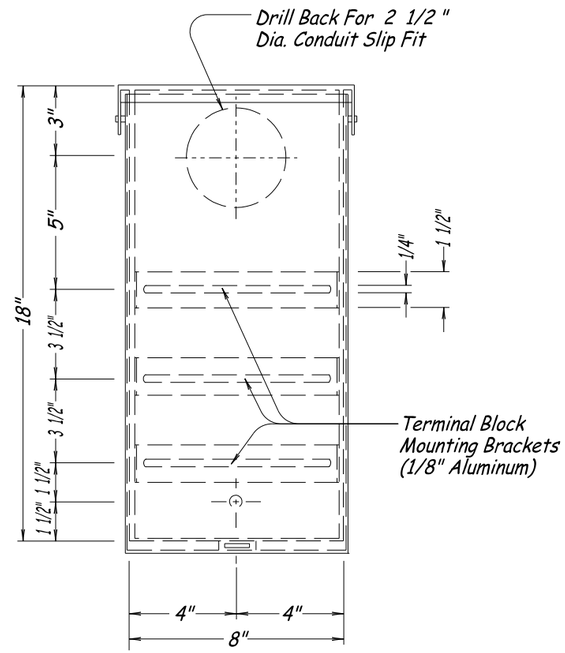

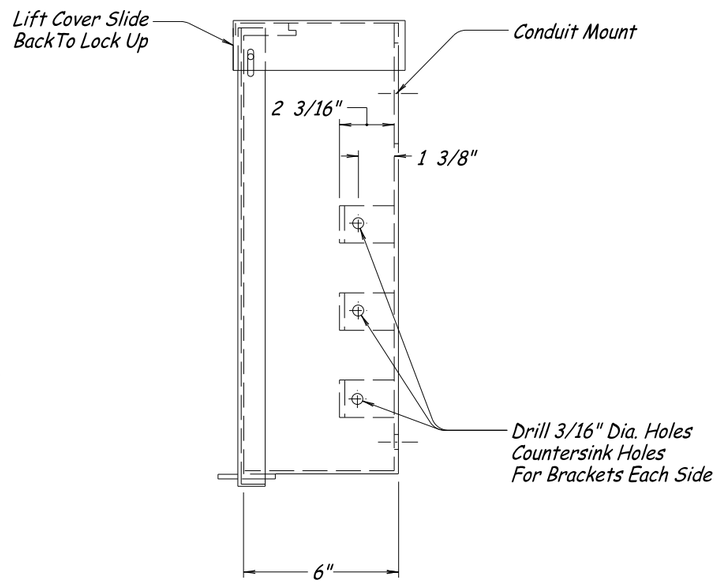

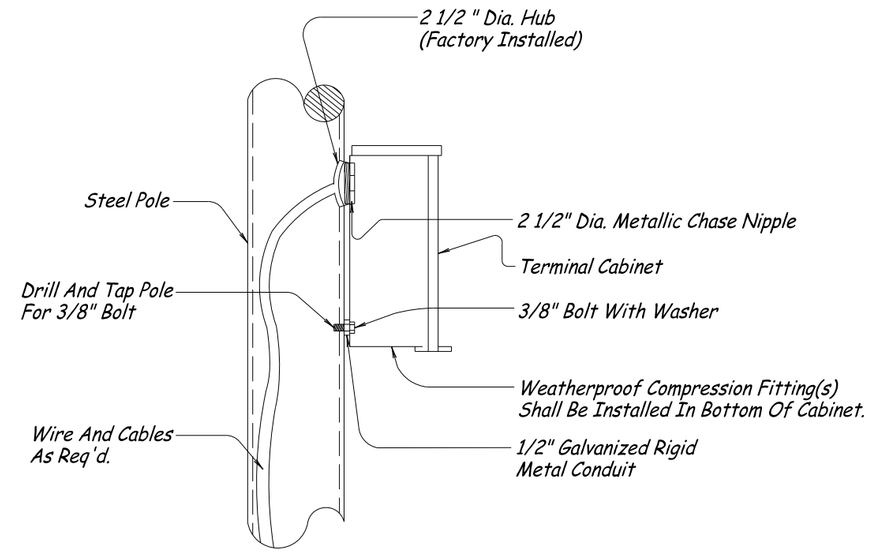

INSTALLATION DETAIL

(Terminal Cabinet)

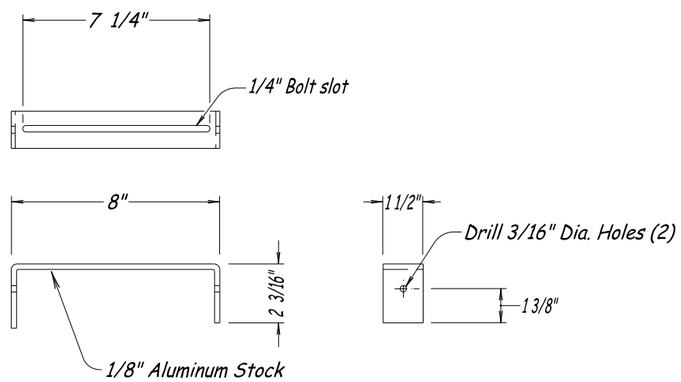

TERMINAL BLOCK MOUNTING BRACKET

WEATHERPROOF TERMINAL CABINET

NOTE:

When Installing On Wood Pole Use Two 3/8" Dia. x 4" Lag Screws With Washers

NOTE:

All Bolts, Nuts And Washers Shall Be Stainless Steel Unless Noted Otherwise.

CALC. BOOK NO. N/A	BASELINE REPORT DATE 07-01-14
ACCOMPANIED BY BASELINE REPORT	NOTE: All material and workmanship shall be in accordance with the current Oregon Standard Specifications
The selection and use of this Standard Drawing, while designed in accordance with generally accepted engineering principles and practices, is the sole responsibility of the user and should not be used without consulting a Registered Professional Engineer.	OREGON STANDARD DRAWINGS TERMINAL CABINET DETAIL 2015

REVISIONS

DATE	DESCRIPTION

December 1, 2015 - May 31, 2016

TM488

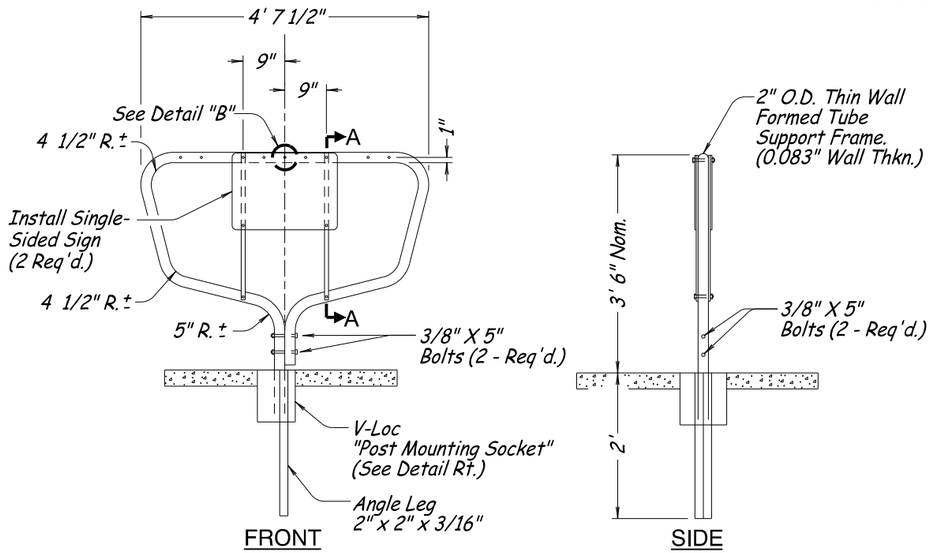

CROSSWALK CLOSURE SUPPORT DETAIL

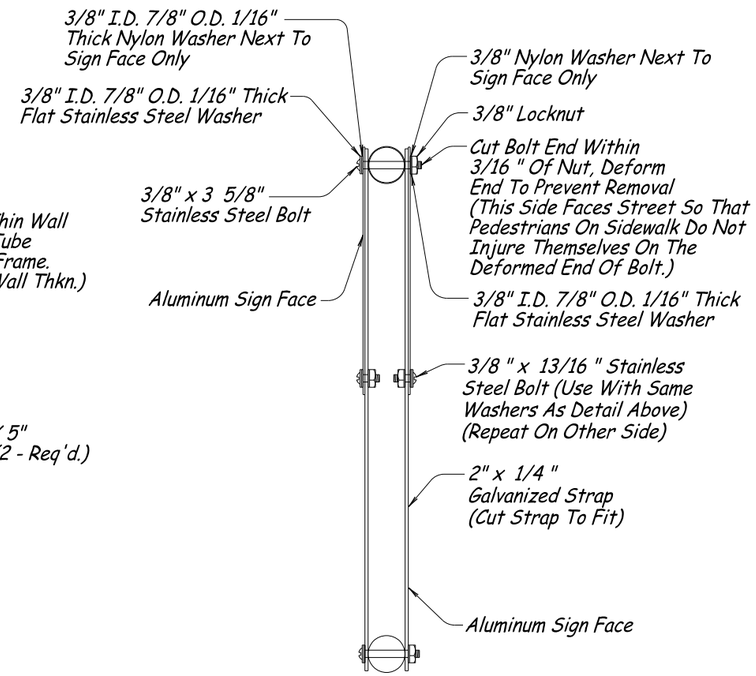

SECTION A-A

SIGN DETAIL

OR22-7
24" x 18"

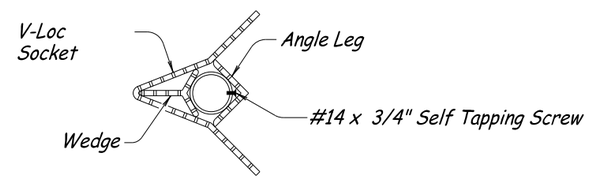

POST MOUNTING SOCKET

For Additional Details See Standard Drg. No. RD100

NOTE:

Care Shall Be Taken That No Concrete Is Placed Within Mounting Socket.

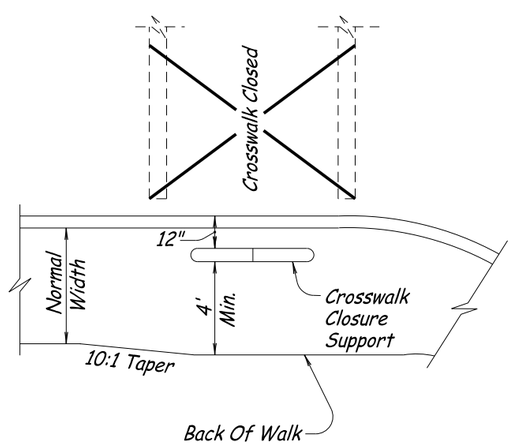

BARRICADE PLAN VIEW

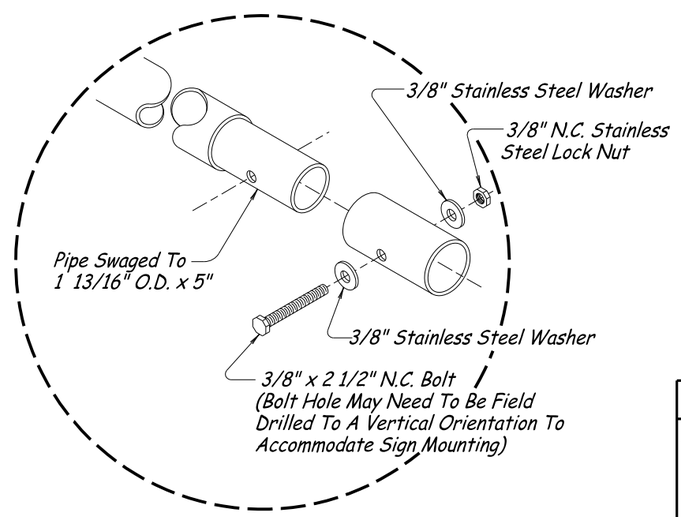

DETAIL "B"

GENERAL NOTE:

1. All Holes In The Tube Support Frame To Be Predrilled By The Manufacturer. (1/32" Larger Than Mounting Bolt)
2. Pipe Swaged By The Manufacturer.

CALC. BOOK NO. N/A	BASELINE REPORT DATE 06-30-11
ACCOMPANIED BY BASELINE REPORT	NOTE: All material and workmanship shall be in accordance with the current Oregon Standard Specifications

The selection and use of this Standard Drawing, while designed in accordance with generally accepted engineering principles and practices, is the sole responsibility of the user and should not be used without consulting a Registered Professional Engineer.

OREGON STANDARD DRAWINGS

CROSSWALK CLOSURE DETAIL

2015

REVISIONS

DATE	DESCRIPTION

December 1, 2015 - May 31, 2016

TM490

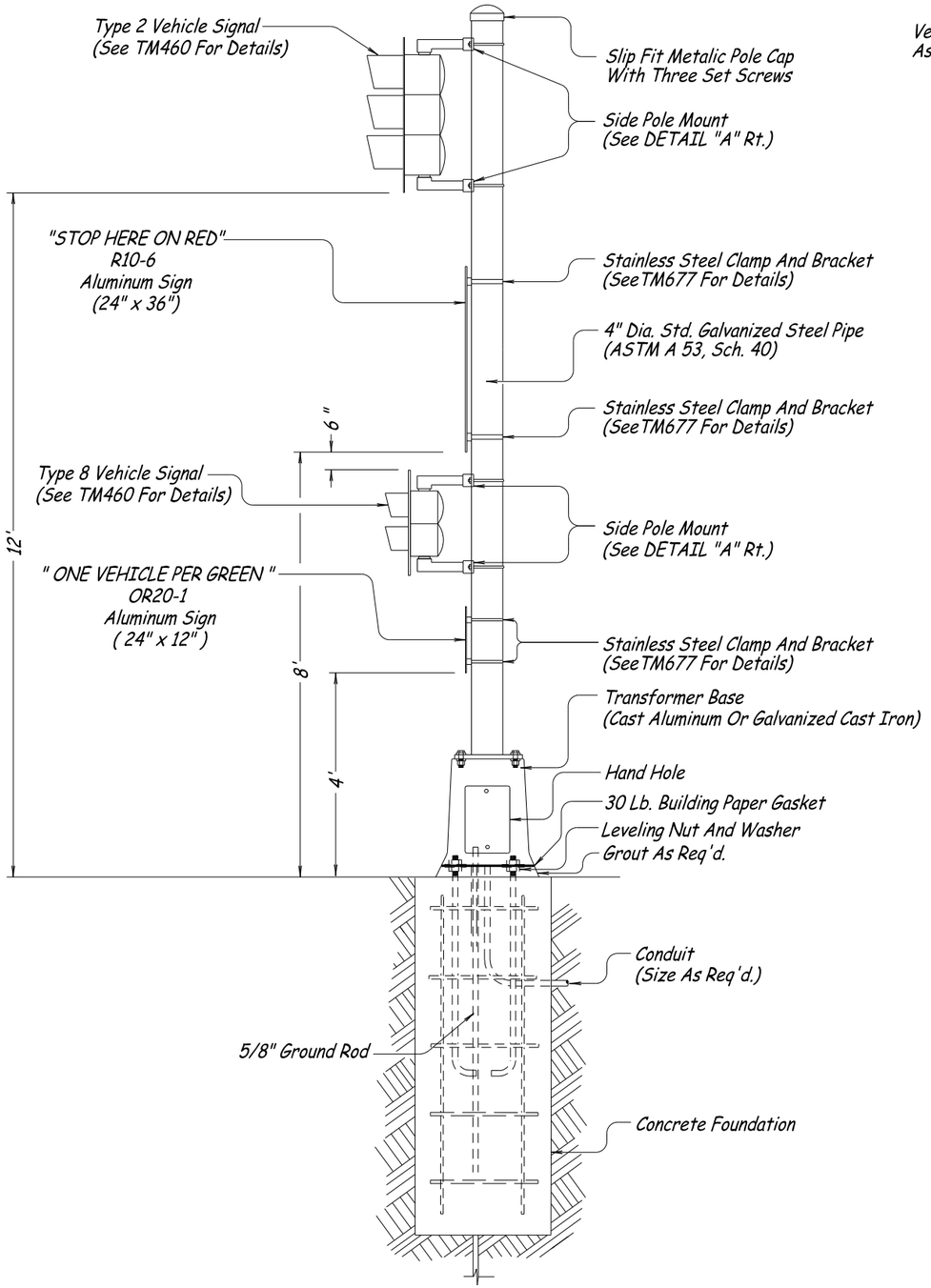

RAMP METER PEDESTAL

(See TM497 And (Vehicle Signal Pedestal) TM457 For Additional Details)

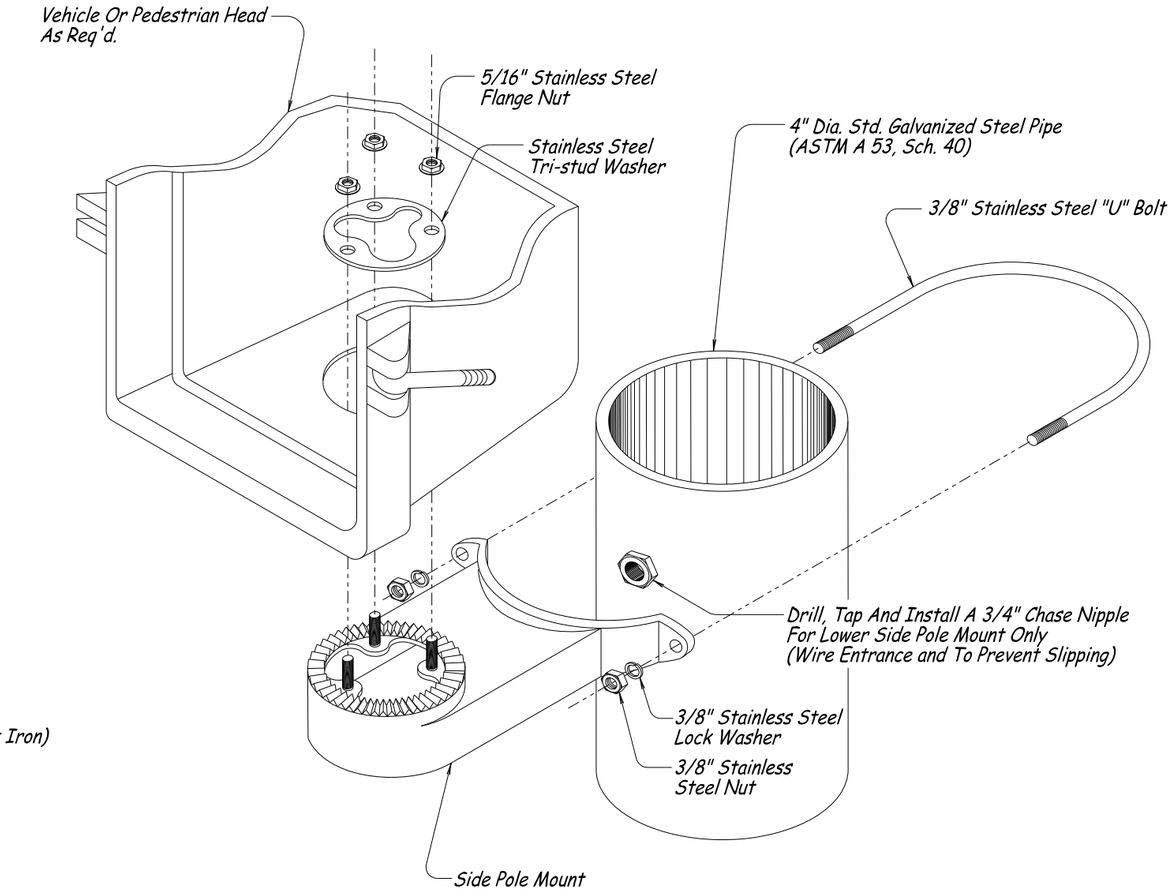

DETAIL "A"

4" SIDE POLE MOUNT

CALC. BOOK NO. N/A	BASELINE REPORT DATE 07-01-14
ACCOMPANIED BY BASELINE REPORT	NOTE: All material and workmanship shall be in accordance with the current Oregon Standard Specifications
The selection and use of this Standard Drawing, while designed in accordance with generally accepted engineering principles and practices, is the sole responsibility of the user and should not be used without consulting a Registered Professional Engineer.	OREGON STANDARD DRAWINGS RAMP METER PEDESTAL DETAILS 2015

REVISIONS

DATE	DESCRIPTION

December 1, 2015 - May 31, 2016

TM492

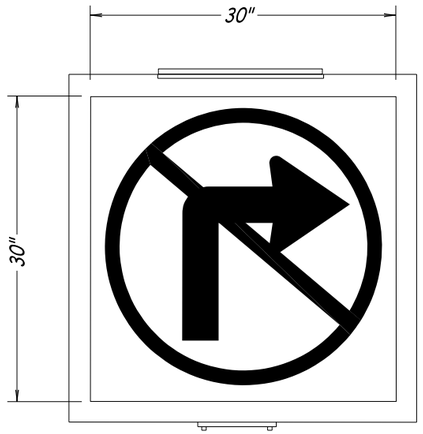

R3-1
L.E.D.
Sign

FRONT VIEW

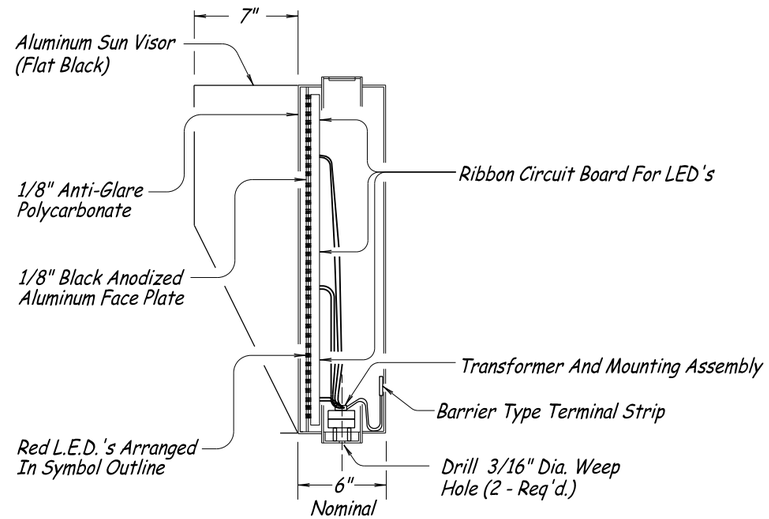

SIDE VIEW

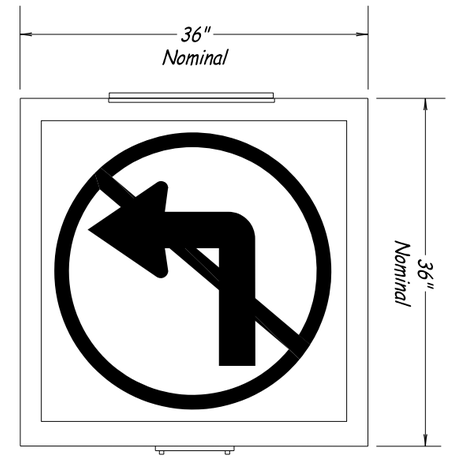

R3-2
L.E.D.
Sign

FRONT VIEW

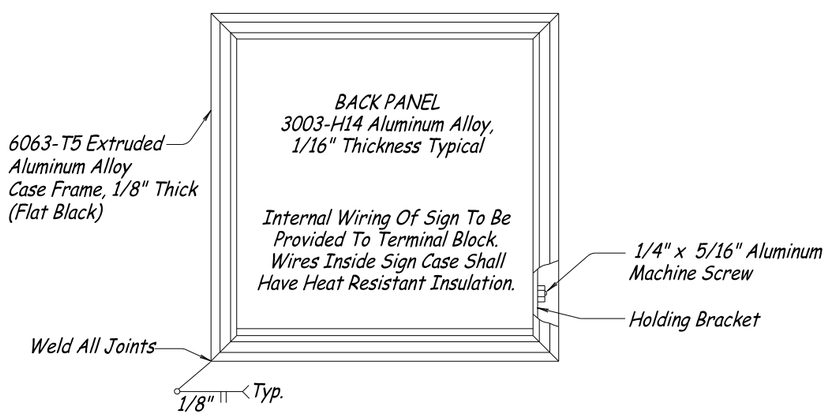

REAR VIEW

GENERAL NOTES:

1. This Drawing Is Intended To Indicate General Design Only In So Far As Equipment Is Concerned. It Is Not To Be Construed As Being An Exact Representation In As Much As Details Of Design Will Vary Among Different Manufacturers. Do Not Scale Drawing.

2. All Bolts, Nuts, And Washers Shall Be Stainless Steel Unless Noted Otherwise. All Set Screws Shall Be Min. Dia. 1/4" Stainless Steel With Square Or Hex Heads.

CALC. BOOK NO. N/A

BASELINE REPORT DATE 07-01-14

ACCOMPANIED BY BASELINE REPORT

NOTE: All material and workmanship shall be in accordance with the current Oregon Standard Specifications

The selection and use of this Standard Drawing, while designed in accordance with generally accepted engineering principles and practices, is the sole responsibility of the user and should not be used without consulting a Registered Professional Engineer.

OREGON STANDARD DRAWINGS

LED PTR SIGNS
AND DETAILS

2015

REVISIONS

DATE	DESCRIPTION

December 1, 2015 - May 31, 2016

TM495

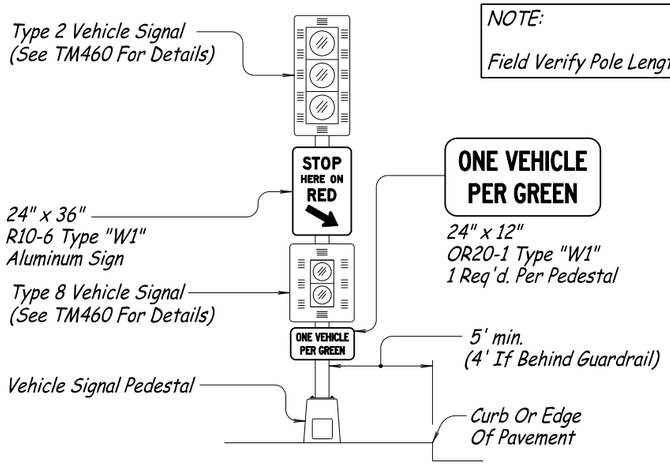

NOTE:

Field Verify Pole Lengths To Maintain Clearances

TYPICAL VEHICLE PEDESTAL RAMP METER INSTALLATION

(See TM457 And TM492 For Details)

(Left Side Of Roadway, Reverse For Right Side)

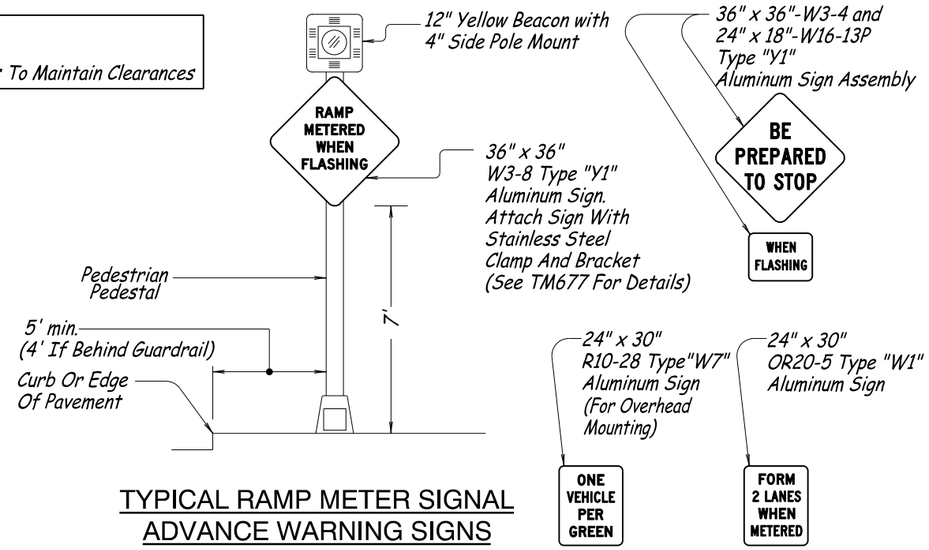

TYPICAL RAMP METER SIGNAL ADVANCE WARNING SIGNS

(See TM457 And TM492 For Details)

(Right Side Of Roadway, Reverse For Left Side)

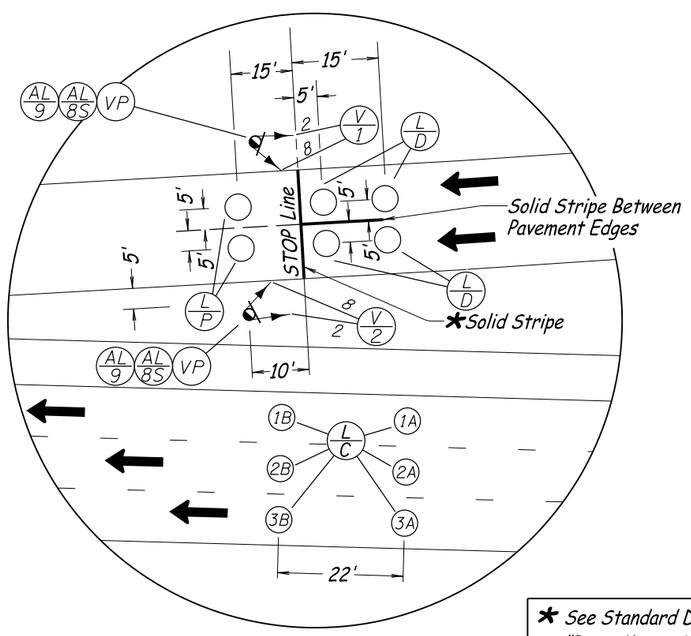

STANDARD INSTALLATION

Typical Vehicle Pedestal Pole And Loop Placement

★ See Standard Drawing TM503, Detail "Ramp Meter Stop Bar 1' & 8" White Bars" Stop Bars and Lane Lines Shown On This Drawing Are For Graphical Reference Only.

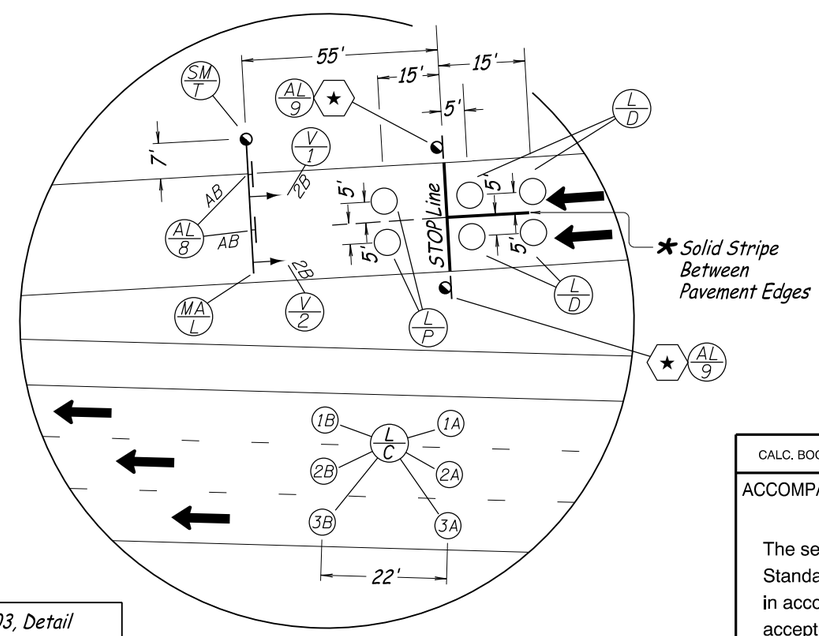

OPTIONAL INSTALLATION

Typical Mast Arm Pole And Loop Placement

L E G E N D

POLES

- SM/T — Install (T=type) standard traffic signal mast arm pole (See, "Pole Entrance Chart")
- MA/L — Install (L=length) foot traffic signal mast arm
- VP — Install vehicle signal pedestal with transformer base

SIGNALS

- V/Ph — Install phase (Ph=phase) vehicle signal
- FY/12 — Install 12 inch flashing yellow beacon

SIGNS

- AL/8 — Install aluminum (24"x30", type "W7") "ONE VEHICLE PER GREEN" sign (R10-28)
- AL/8S — Install aluminum (24"x12", type "W1") "ONE VEHICLE PER GREEN" sign (OR20-1)
- AL/9 — Install aluminum (24"x36", type "W1") "STOP HERE ON RED" with arrow sign (R10-6)
- AL/16 — Install (36"x36", type "Y1") "RAMP METERED WHEN FLASHING" (Warning) sign (W3-8)
- AL/17 — Install (24"x30" type "W1") "FORM 2 LANES WHEN METERED" sign (OR20-5)
- AL/18 — Install (36"x36" Type "Y1") "BE PREPARED TO STOP" (Warning) sign (W3-4)
- AL/19 — Install (24"x18" Type "Y1") "WHEN FLASHING" (Warning) sign (W16-13P)
- ★ — See signing plans for details on sign and attachment

DETECTION

- L/F — Install 6' round or 4' diamond Ramp Meter(F=function) detector loop

Functions:

D = Demand
C = Count
P = Passage
Q = Queue

SIGNAL MOUNTING OPTIONS

B = Adjustable signal bracket assembly w/rain cap(s) (Install 1" galvanized chase nipple)

SM = 4" Side pole mounting bracket

SIGN MOUNTING OPTIONS

AB = Adjustable sign bracket assembly w/rain cap(s)

SIGNAL HEAD TYPES

1Y = 12"Y
2 = 12" R, 12" Y, 12" G
8 = 8" R, 8" G

CALC. BOOK NO. N/A	BASELINE REPORT DATE 07-01-14
ACCOMPANIED BY BASELINE REPORT	NOTE: All material and workmanship shall be in accordance with the current Oregon Standard Specifications

The selection and use of this Standard Drawing, while designed in accordance with generally accepted engineering principles and practices, is the sole responsibility of the user and should not be used without consulting a Registered Professional Engineer.

OREGON STANDARD DRAWINGS

RAMP METER LAYOUT AND DETAILS

2015

REVISIONS

DATE	DESCRIPTION

STANDARD SIGNAL ARM LOADS							
Signal Pole Type	Signal Arm Length	Signals			Sign		DS Max. for S2
		4L Qty.	2 Qty.	5 * Qty.	S1 Qty.	S2 * Qty.	
SM1 or SM1L	15′	1	0	1	2	0	N/A
SM2 or SM2L	20′	1	1	1	3	0	N/A
	25′	1	1	1	3	0	
SM3 or SM3L	30′	1	1	1	3	1	9′-1″
	35′	1	1	1	3	1	
SM4 or SM4L	40′	1	2	1	4	1	11′-1″
	45′	1	2	1	4	1	
SM5 or SM5L	50′	1	2	1	4	1	21′-1″
	55′	1	2	1	4	1	

* - Load location is the closest sign or signal of that type to the vertical post.

1. Camera mounted on 6 ft arm placed at any location on signal arm.
2. Fire Pre-Emption may be placed at any location along the mast arm.
3. Loads stated in the table produce reactions as shown in tables on TM651. Modifications to the loading shown require analysis to verify the structural adequacy of the pole.
4. Physical fit of the loading must be verified.

SIGNAL ARMS DEFLECTION		
Signal Arm Length "SA"	Allowable Dead Load Deflection	Allowable Total Load Deflection
15′ or less	0.01″SA″	0.05″SA″
20′	2½″	12″
25′	3½″	15″
30′	5″	21″
35′	7″	29″
40′	9½″	38″
45′	1′-½″	48″
50′	1′-4″	60″
55′	1′-8″	74″

VERTICAL POST LOADS								
Description	Maximum Centerline Elevation	Height (Each)	Width (Each)	Depth (Each)	Area Front (sq. ft)	Area Side (sq. ft)	Area Bottom (sq. ft)	Weight 0″ Ice (lbs)
2-Ped. Push Buttons	3′-6″	7¾″	5″	3⅜″	0.27	0.18	0.12	3.0
Controller Cabinet	5′-9″	46″	24″	22″	7.67	7.03	3.67	300
2-Pedestrian Signals	8′-3½″	18¾″	19″	19″	2.47	2.47	2.51	25.0
Terminal Cabinet	10′-9″	18⅛″	6¾″	8⅜″	0.85	1.05	0.39	25.0
Guide Sign (S3)	15′-0″	72″	120″	8⅜″	60.0	1.00	1.67	395
Photoelectric Cell	38′-4″	2¼″	3¼″	3¼″	0.05	0.05	0.07	5.0

1. Physical fit of the loading must be verified.

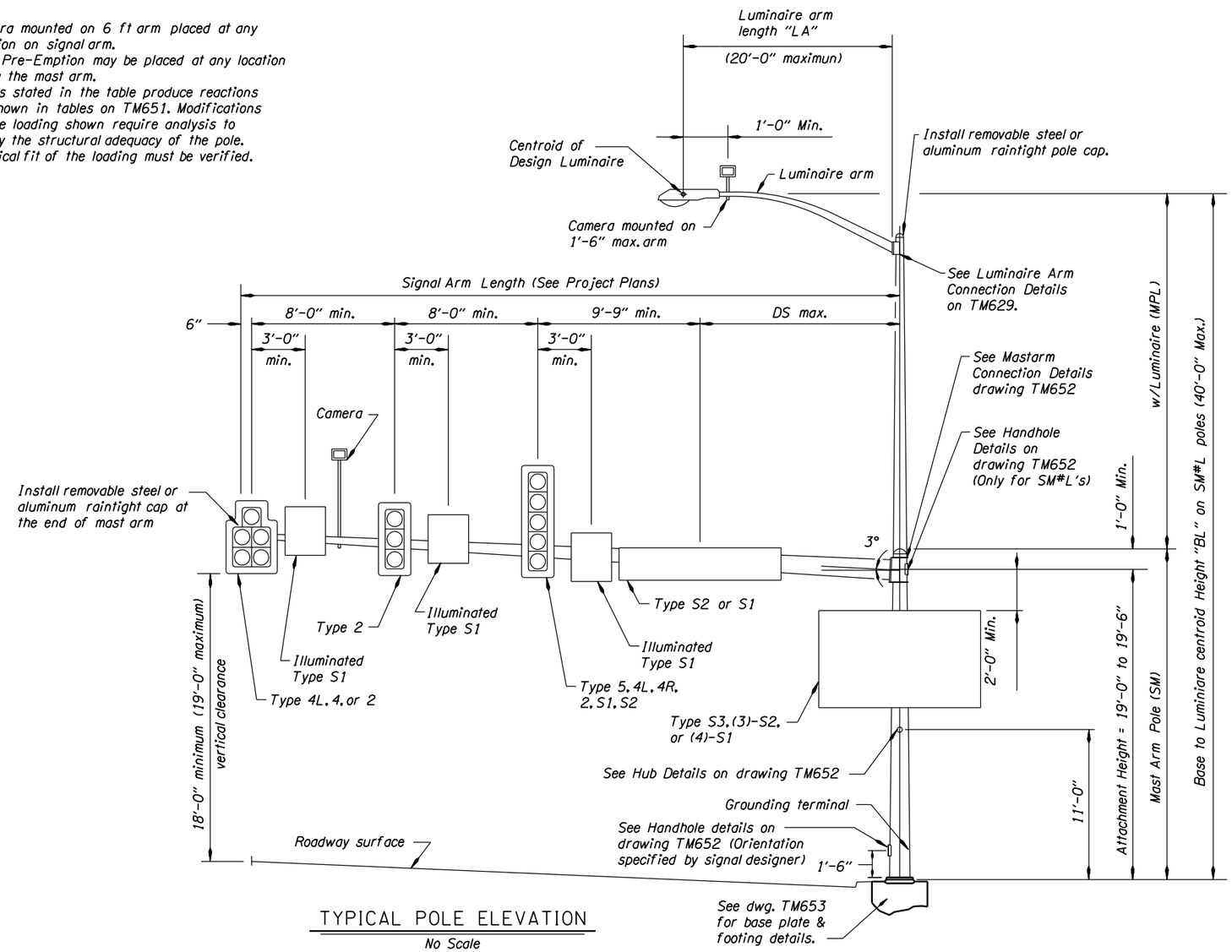

TYPICAL POLE ELEVATION

No Scale

SIGNAL POLE APPURTENANCE TYPES

APPURTENANCE LOADS				
Type	Area Front (sq. ft)	Area Side (sq. ft)	Area Bottom (sq. ft)	Weight 0″ Ice (lbs)
4L	12.4	6.61	3.64	145
2	8.67	6.61	1.95	85.0
4	11.0	8.49	1.95	97.0
5	13.3	10.36	1.95	142
S1	7.50	2.38	1.72	71.0
S2	21.0	0.00	1.67	105

CALC. BOOK NO.	BASELINE REPORT DATE	ACCOMPANIED BY DWGS.	SHEET
5301	07-JAN-2011	TM651, TM652, TM653, TM679	1 OF 4

NOTE: All material and workmanship shall be in accordance with the current Oregon Standard Specifications

The selection and use of this Standard Drawing, while designed in accordance with generally accepted engineering principles and practices, is the sole responsibility of the user and should not be used without consulting a Registered Professional Engineer.

OREGON STANDARD DRAWINGS
TRAFFIC SIGNAL SUPPORTS
GENERAL DETAILS & DESIGN CRITERIA

2015

DATE	REVISION DESCRIPTION

tm650.dgn 11-JUL-2014

TM650

Effective Date: December 1, 2015 - May 31, 2016

GENERAL NOTES:

1. Signal supports shall be designed in accordance with the AASHTO Standard Specifications for Structural Supports for Highway Signs, Luminaires and Traffic Signals 4th edition, 2001, 2002, and 2003 interim revisions.
2. All traffic signal supports shall conform to the design criteria and details shown on these drawings except as approved by the Engineer.
3. The design basic wind speed (3 second gust) shall be 110 mph, gust factor G = 1.14, Ir = 1.0 (50 yr recurrence interval), Fatigue Category II, no galloping, and truck speed = 55 mph.
4. Signal poles from this standard are not allowed over highways I-5, I-84, I-205, I-405, US 26 (Sunset Hwy) between mile points 64.3 - 73.0, I-105, and I-82. Signal poles on these highways require a Fatigue Category I.
5. Pole and arm shafts may be either round, hexdecagonal, dodecagonal, or octagonal but shapes shall not be mixed on a project. Dimensional tolerances of ASTM A595 shall apply to all tapered steel tubing members. Additionally, the diameter of round tapered steel tubing members or the dimensions across the flats of octagonal tapered steel tubing members shall not vary more than 2% from specified dimension. Two ply and fluted poles or arms are not permitted.
6. Pole taper shall be equal to .0117 in/in.
7. Anchor rods shall conform to ASTM Specification F1554 Gr. 55, Supplemenetary Requirement "S2" that include grade and manufacturer's identification.
8. High strength bolts shall conform to ASTM Specification A325 Type 1.
9. Nuts for high strength bolts shall be heavy hex and conform to ASTM A563 Grade DH with supplmentary requirements "S1" and "S2".
10. Hardened steel washers shall conform to ASTM F436 Type 1.
11. Direct Tension Indicators (DTI) shall be the compressible-washer type, mechanically galvanized, conforming to ASTM F959.
12. Steel sheet for poles and arm shall conform ASTM A595, Grades A or B, ASTM A572 Gr. 50, or approved equal. All other steel sheet and plate shall conform to AASHTO specification M223 (ASTM A572), or approved equal. Supplement S18 of ASTM A6 regarding maximum tensile strength shall apply.
13. All structural steel including fasteners shall be hot dip galvanized after fabrication unless otherwise noted.
14. Galvanize-Control Silicon, typical. Silicon content of the base metal shall be in the range of 0 to 0.04% or 0.15 to 0.25%.
15. Footing concrete shall be Commercial Grade Concrete (fc=3000 psi) per Specification Section 440. Grout in grout pad shall be non-shrink high early strength grout (non-ferrous) with a minimum strength of 5000 psi. Footing concrete may be used as an alternate to grout.
16. Reinforcing steel shall conform to AASHTO M31, Grade 60 (ASTM A615 or A706). A min. lap splice length of 32 bar diameters shall be used unless shown otherwise.
17. Computed deflection of these poles at full design loading shall be limited to 5% of the pole length. Computed dead load deflection of the poles shall be limited to 1% of the pole length. Pole shall be raked to offset the computed dead load deflection. Computed deflection (ignoring pole bending and/or rotation) of signal arms shall not exceed that listed in the Signal Arm Deflection Table on TM650. Additionally, the amplitude (maximum up to maximum down as measured at the tip of the arm) of wind induced vertical oscillations shall not exceed 1.5% of the signal arm length. Luminaire arms and pole extensions to support luminaire arms shall meet requirements of drawing TM629.
18. Hubs for cabinets and/or other appurtenances shall be welded into the pole prior to galvanizing. Poles may be tapped for up to 1" galvanized bolts after pole has been galvanized.
19. Longitudinal seam welds within 6" of a cirumferential weld shall be complete penetration welds. Weld inspection shall be in accordance with AWS D1.1 and the special provisions. Inspect seam welds using cyclically loaded criteria. Hubs shall be 3000# threaded forged carbon steel flat weld hubs by Anvil Products Inc., Phoenix Forging Co., Bonney Forge & Tool Works or approved equal.
20. Grounding terminal shall be ½" UNC x 1½" Type 308, 309 or 310 threaded stainless steel weld studs.
21. Tighten 4 bolt arm connection bolts and tighten anchor rods in accordance with 962.46(jX2).
22. Tighten 8 bolt arm connection bolts in accordance with 930.40(d).
23. Round and smooth all edges along electrical way.
24. The Minimum arm flange thickness shall be equal to the value where prying action is not included in the bolt calculation.

Standard Maximum Base Reactions

Signal Pole Type	Signal Arm Lengths	Wind Load Case II				Controlling Fatigue		
		Axial (Kips)	Shear (Kips)	Moment (Kip-ft)	Torque (Kip-ft)	Shear (Kips)	Moment (Kip-ft)	Torque (Kip-ft)
SM1	15'	2.10	5.15	80.39	16.95	0.68	10.39	2.13
SM2	20', 25'	2.66	6.23	105.41	42.54	0.82	13.35	5.37
SM3	30', 35'	3.49	7.77	138.43	82.87	1.00	17.10	10.31
SM4	40', 45'	4.51	9.00	173.46	132.72	1.16	20.54	16.50
SM5	50', 55'	5.69	9.23	190.91	181.60	1.18	21.62	22.55
SM1L	15'	2.96	6.09	113.28	23.22	0.79	14.08	2.84
SM2L	20', 25'	3.69	7.23	139.41	48.81	0.94	17.17	6.08
SM3L	30', 35'	4.39	8.80	176.51	87.88	1.14	21.43	11.02
SM4L	40', 45'	5.94	10.14	215.11	136.97	1.31	25.27	17.21
SM5L	50', 55'	7.34	10.56	241.17	187.96	1.34	26.49	23.26

Standard Maximum Mast Arm Reactions

Signal Pole Type	Signal Arm Lengths	Wind Load Case II			Controlling Fatigue	
		Axial (Kips)	Shear (Kips)	Moment (Kip-ft)	Shear (Kips)	Moment (Kip-ft)
SM1, SM1L	15'	0.06	1.98	18.44	0.23	2.18
SM2, SM2L	20', 25'	0.10	3.14	46.20	0.37	5.48
SM3, SM3L	30', 35'	0.15	4.51	89.42	0.53	10.51
SM4, SM4L	40', 45'	0.23	5.91	146.67	0.67	16.82
SM5, SM5L	50', 55'	0.34	6.78	211.94	0.70	22.99

Luminaire Arm Reactions

Arm Lengths	Wind Load Case II			Controlling Fatigue	
	Axial (Kips)	Shear (Kips)	Moment (Kip-ft)	Shear (Kips)	Moment (Kip-ft)
6'	0.03	0.31	1.49	0.03	0.15
10'	0.06	0.38	2.85	0.04	0.29
15'	0.08	0.47	4.96	0.05	0.51
20'	0.05	0.55	7.24	0.06	0.74

CALC. BOOK NO.	BASELINE REPORT DATE	ACCOMPANIED BY DWGS.	SHEET
5301	07-JAN-2011	TM650, TM652, TM653	2 OF 4

NOTE: All material and workmanship shall be in accordance with the current Oregon Standard Specifications

The selection and use of this Standard Drawing, while designed in accordance with generally accepted engineering principles and practices, is the sole responsibility of the user and should not be used without consulting a Registered Professional Engineer.

OREGON STANDARD DRAWINGS

TRAFFIC SIGNAL SUPPORTS NOTES AND REACTIONS

2015

DATE	REVISION DESCRIPTION

tm651.dgn 11-JUL-2014

TM651

Effective Date: December 1, 2015 - May 31, 2016

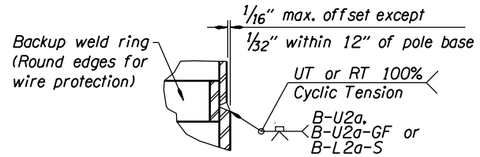

POLE AND ARM SPLICE WELD DETAILS

No Scale

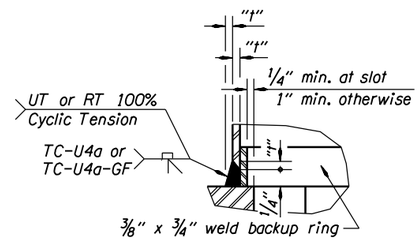

TC-U4a WELD DETAIL

No Scale

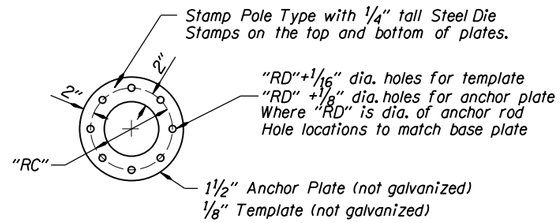

ANCHOR PLATE AND TEMPLATE DETAIL

No Scale

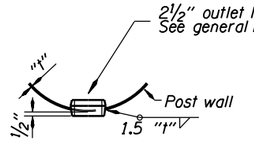

HUB WELD DETAIL

No Scale

Mast arm Connection				
Signal Arm Lengths	N Number	D Bolt Diam.	BC Bolt Circle	V Bolt Spacing
15'	4	1"	9 1/2"	——
20', 25'	4	1 1/4"	14"	——
30', 35'	4	1 1/2"	15 1/2"	——
40', 45'	8	1 "	——	5"
50', 55'	8	1 1/4"	——	6"

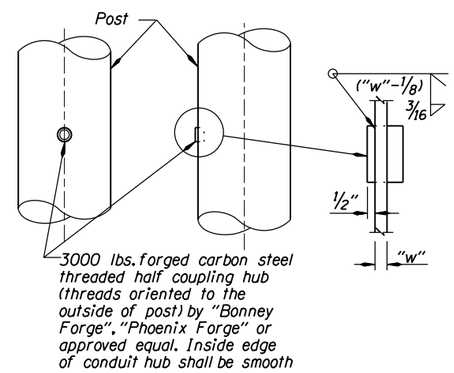

HUB WELD DETAIL

No Scale

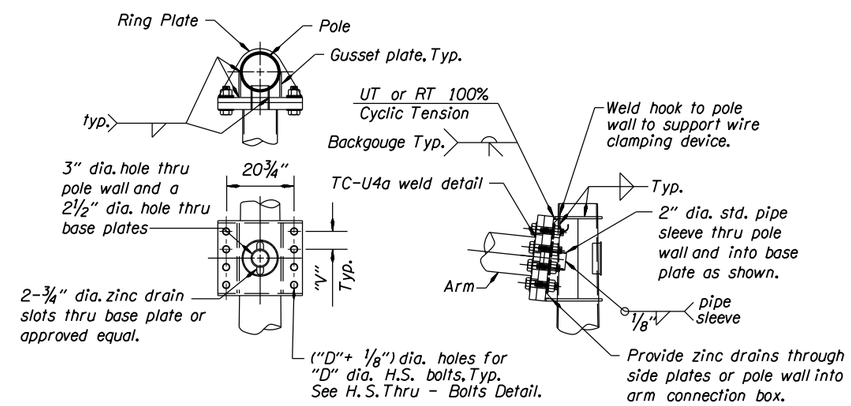

8 BOLT ARM CONNECTION DETAILS

No Scale

ARM CONNECTION NOTES:

Gusset plates are 1/4" min. thickness.

Ring plates are 3/8" min. thickness.

See general notes on TM651 for bolt tightening.

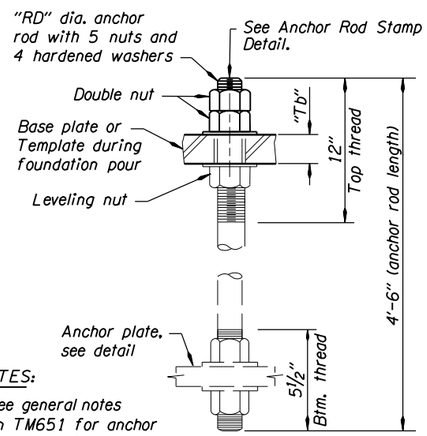

NOTES:

- See general notes on TM651 for anchor rod tightening.
- "Tb" determined by manufacturer.

ANCHOR ROD DETAIL

No Scale

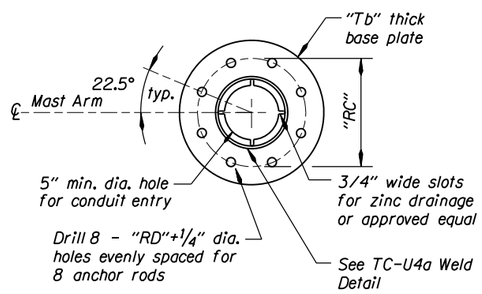

PLAN - BASE PLATE

No Scale

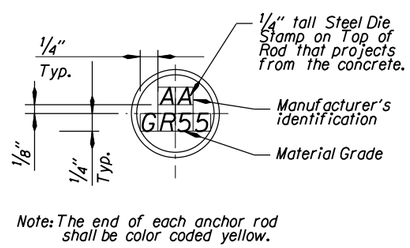

ANCHOR ROD STAMP DETAIL

No Scale

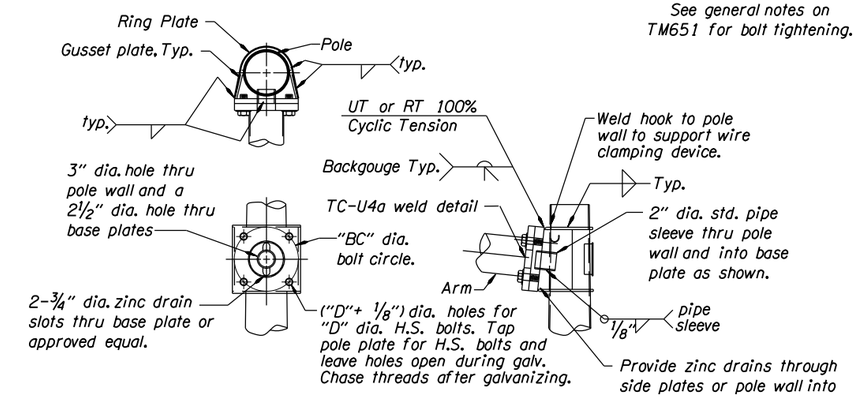

4 BOLT ARM CONNECTION DETAILS

No Scale

Anchor Rods and Base Plate Data			
Mastarm Pole Type	Strain Pole Type	RD Rod Diam.	RC Rod Circle
SM1	-----	1 1/4"	16 1/2"
SM2, SM1L	-----	1 1/2"	17"
SM3, SM2L	STP1, STP1L, STP2, STP2L	1 1/2"	20"
SM4, SM3L	STP3, STP3L, STP4, STP4L	1 3/4"	22"
SM5, SM4L	-----	1 3/4"	23"
SM5L	STP5, STP5L, STP6, STP6L, STP7, STP7L	2"	23 1/2"

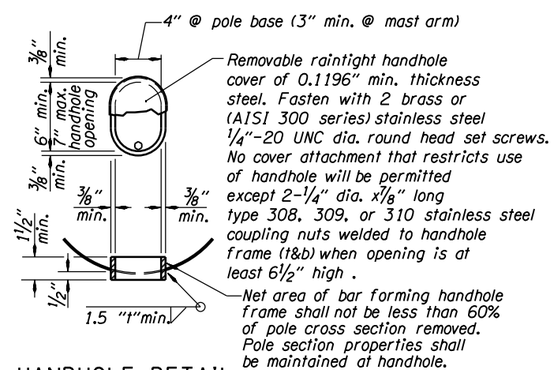

HANDHOLE DETAIL

No Scale

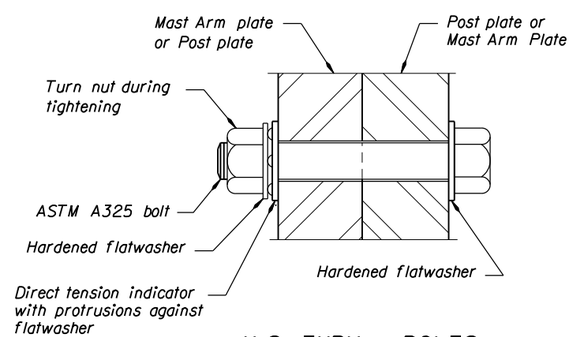

H.S. THRU - BOLTS

No Scale

CALC. BOOK NO.	BASELINE REPORT DATE	ACCOMPANIED BY DWGS.	SHEET
5301	10-JAN-2014	TM650, TM651, TM653	3 OF 4

NOTE: All material and workmanship shall be in accordance with the current Oregon Standard Specifications

The selection and use of this Standard Drawing, while designed in accordance with generally accepted engineering principles and practices, is the sole responsibility of the user and should not be used without consulting a Registered Professional Engineer.

OREGON STANDARD DRAWINGS

TRAFFIC SIGNAL SUPPORTS STEEL DETAILS

2015

DATE	REVISION DESCRIPTION

tm652.dgn 11-JUL-2014

TM652

Effective Date: December 1, 2015 - May 31, 2016

Standard Foundations						
Foundation Number	Mastarm Pole Types	Strain Pole Types	"FD" Diameter Min.	Vertical Rebar	Hoop Size and Spacing	Hoop Lap Length
1	SM1	-----	36"	8-#8	#4 at 6"	18"
2	SM2, SM1L	-----	36"	8-#8	#4 at 6"	18"
3	SM3, SM2L	STP1, STP1L	36"	8-#8	#4 at 6"	18"
4	SM4, SM3L	STP2, STP2L	42"	10-#8	#5 at 6"	21"
5	SM5, SM4L	STP3, STP3L	42"	10-#9	#5 at 6"	21"
6	SM5L	STP4, STP4L	42"	10-#9	#5 at 6"	21"
7	-----	STP5, STP5L	42"	TBD	TBD	TBD
8	-----	STP6, STP6L	42"	TBD	TBD	TBD
9	-----	STP7, STP7L	42"	TBD	TBD	TBD

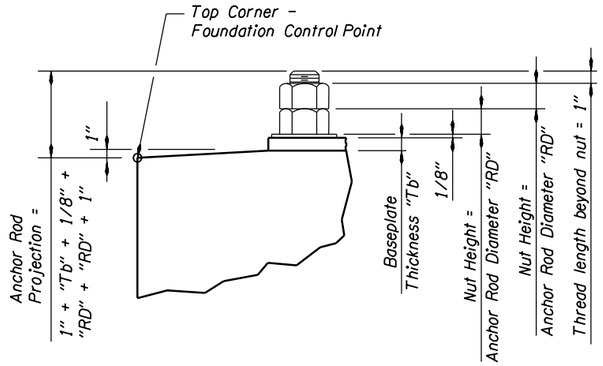

PROJECTION DETAIL

No Scale

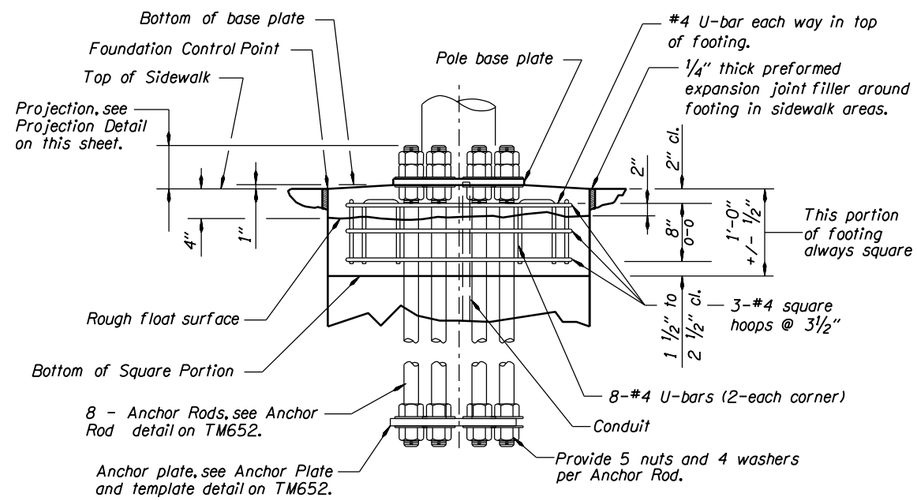

ELEVATION - TOP OF FOOTING

No Scale

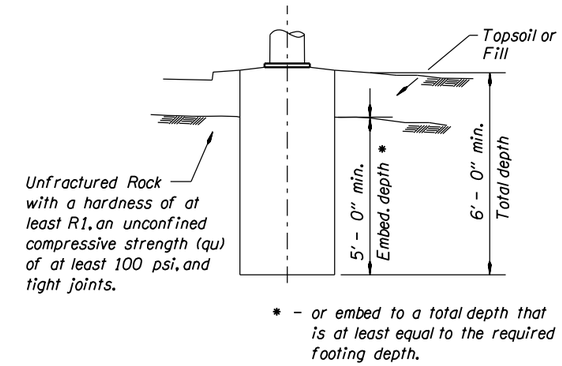

ROCK INSTALLATION REQUIREMENTS

No Scale

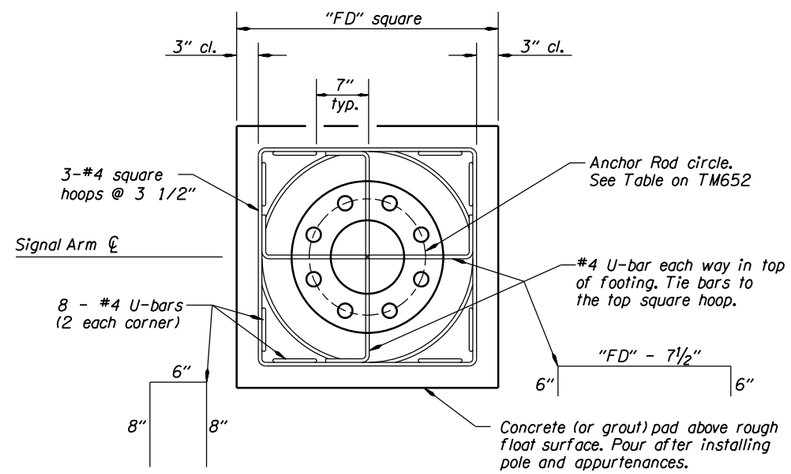

PLAN - TOP OF FOOTING

No Scale

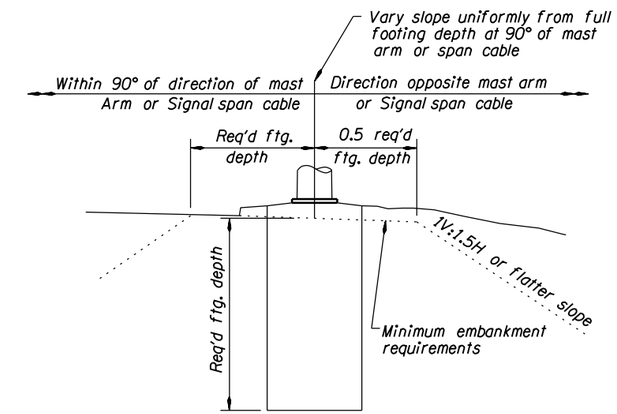

MINIMUM EMBANKMENT REQUIREMENTS

No Scale

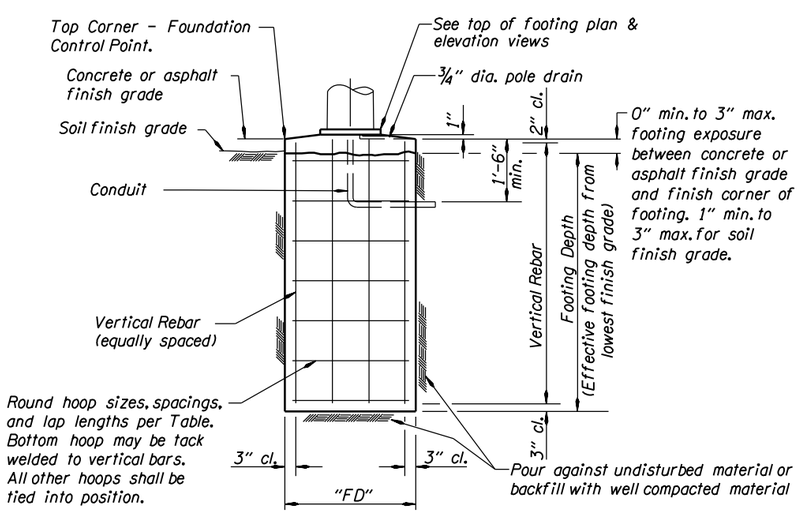

TYPICAL FOOTING ELEVATION

No Scale

NOTES:

See TM651 for general notes.
The pier torsional forces have been designed according to the ACI 318.
Shafts 7,8, and 9 do not include torsion rebar.

CALC. BOOK NO.	BASELINE REPORT DATE	ACCOMPANIED BY DWGS.	SHEET
5323	10-JAN-2014	TM650, TM651, TM652	4 OF 4

NOTE: All material and workmanship shall be in accordance with the current Oregon Standard Specifications

The selection and use of this Standard Drawing, while designed in accordance with generally accepted engineering principles and practices, is the sole responsibility of the user and should not be used without consulting a Registered Professional Engineer.

OREGON STANDARD DRAWINGS

TRAFFIC SIGNAL SUPPORTS FOUNDATION REQUIREMENTS

2015

DATE	REVISION DESCRIPTION

tm653.dgn 11-JUL-2014

TM653

LOADING NOTES:

1. Fire Pre-Emption may be placed at any location along the span.
2. Loads stated in the table produce reactions as shown in tables on TM651. Modifications to the loading shown require analysis to verify the structural adequacy of the pole.
3. Physical fit of the loading must be verified.
4. Include wind area and weight for appurtanance supports between the messenger and tether cables. Accomodate enough vertical space for a type 5 signal.

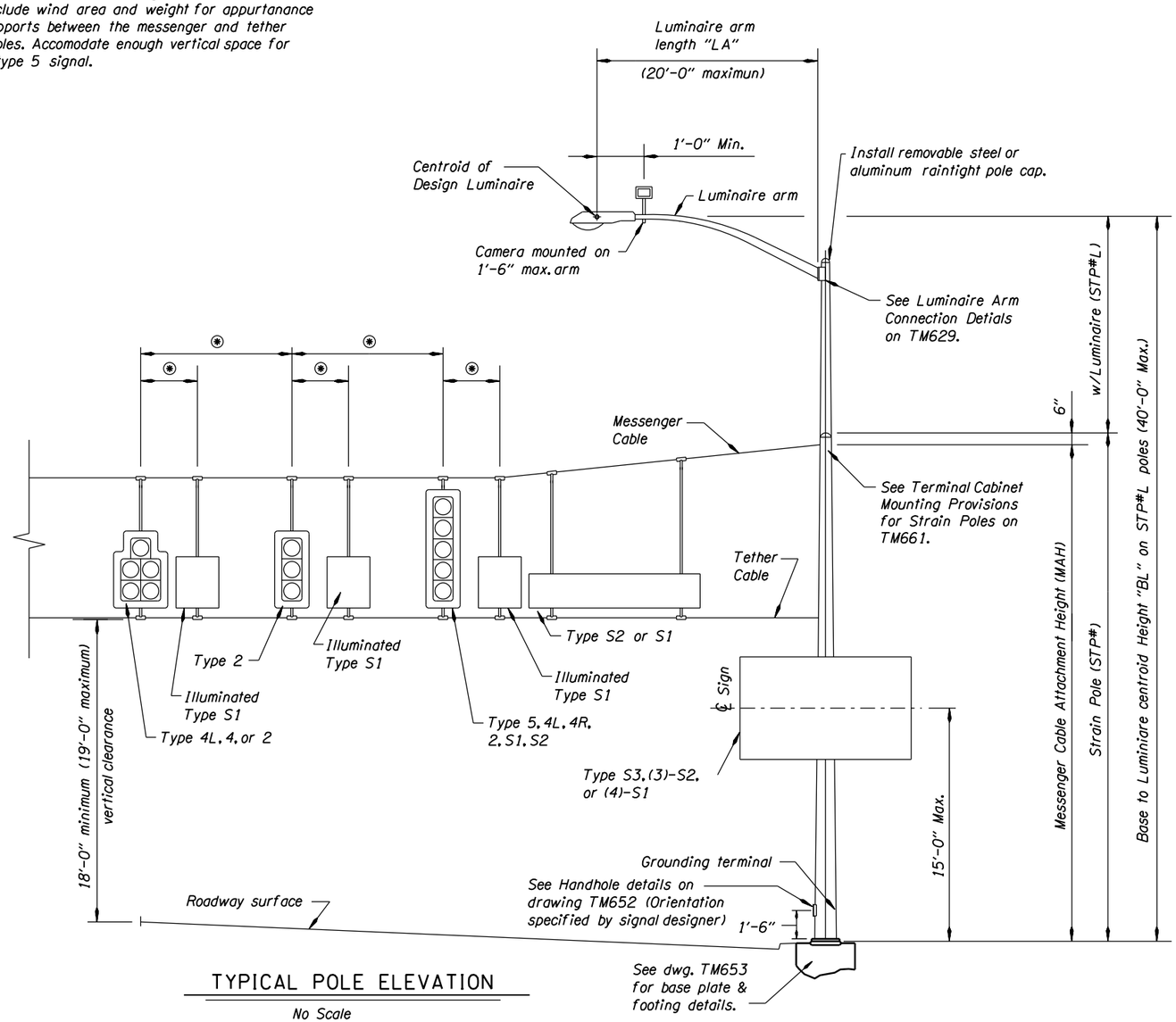

TYPICAL POLE ELEVATION

No Scale

⊛ - As shown on project plans.

VERTICAL POST LOADS								
Description	Maximum Centerline Elevation	Height (Each)	Width (Each)	Depth (Each)	Area Front (sq. ft)	Area Side (sq. ft)	Area Bottom (sq. ft)	Weight 0" Ice (lbs)
2-Ped. Push Buttons	3'-6"	7¾"	5"	3⅜"	0.27	0.18	0.12	3.0
Controller Cabinet	5'-9"	46"	24"	22"	7.67	7.03	3.67	300
2-Pedestrian Signals	8'-3½"	18¾"	19"	19"	2.47	2.47	2.51	25.0
Terminal Cabinet	32'-9"	18⅛"	6¾"	8⅜"	0.85	1.05	0.39	25.0
Guide Sign (S3)	15'-0"	72"	120"	8⅜"	60.0	1.00	1.67	395
Photoelectric Cell	38'-4"	2¼"	3¼"	3¼"	0.05	0.05	0.07	5.0

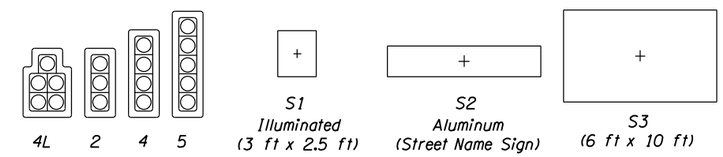

SIGNAL POLE APPURTENANCE TYPES

APPURTENANCE LOADS				
Type	Area Front (sq. ft)	Area Side (sq. ft)	Area Bottom (sq. ft)	Weight 0" Ice (lbs)
4L	12.4	6.61	3.64	145
2	8.67	6.61	1.95	85.0
4	11.0	8.49	1.95	97.0
5	13.3	10.36	1.95	142
S1	7.50	2.38	1.72	71.0
S2	21.0	0.00	1.67	105

CALC. BOOK NO.	BASELINE REPORT DATE	ACCOMPANIED BY DWGS.	SHEET
5345	07-JAN-2011	TM652, TM653, TM661	1 OF 2

NOTE: All material and workmanship shall be in accordance with the current Oregon Standard Specifications

The selection and use of this Standard Drawing, while designed in accordance with generally accepted engineering principles and practices, is the sole responsibility of the user and should not be used without consulting a Registered Professional Engineer.

OREGON STANDARD DRAWINGS
TRAFFIC STRAIN POLE SUPPORTS

GENERAL DETAILS & DESIGN CRITERIA
2015

DATE	REVISION DESCRIPTION

tm660.dgn 11-JUL-2014

TM660

Effective Date: December 1, 2015 - May 31, 2016

GENERAL NOTES:

1. Signal supports shall be designed in accordance with the AASHTO Standard Specifications for Structural Supports for Highway Signs, Luminaires and Traffic Signals 4th edition, 2001, 2002, and 2003 interum revisions.
2. All traffic signal supports shall conform to the design criteria and details shown on these drawings except as approved by the Engineer.
3. The design basic wind speed (3 second gust) shall be 110 mph, gust factor G = 1.14, Ir = 1.0 (50 yr recurrence interval), and no fatigue design is required for strain poles.
4. Strain poles from this standard are not allowed over highways I-5, I-84, I-205, I-405, and US 26 (Sunset Hwy) between mile points 64.3 - 73.0.
5. Pole luminaire shafts may be either round, hexdecagonal, dodecagonal, or octagonal but shapes shall not be mixed on a project. Dimensional tolerances of ASTM A595 shall apply to all tapered steel tubing members. Additionally, the diameter of round tapered steel tubing members or the dimensions across the flats of octagonal tapered steel tubing members shall not vary more than 2% from specified dimension. Two ply and fluted poles or arms are not permitted.
6. Pole taper shall be equal to .0117 in/in.
7. Anchor rods shall conform to ASTM Specification F1554 Gr. 55, Supplemenetary Requirement "S2" that include grade and manufacturer's identification.
8. High strength bolts shall conform to ASTM Specification A325 Type 1.
9. Nuts for high strength bolts shall be heavy hex and conform to ASTM A563 Grade DH with supplmentary requirements "S1" and "S2".
10. Hardened steel washers shall conform to ASTM F436 Type 1.
11. Direct Tension Indicators (DTI) shall be the compressible-washer type, mechanically galvanized, conforming to ASTM F959.
12. Steel sheet for poles and arm shall conform ASTM A595, Grades A or B, ASTM A572 Gr. 50, or approved equal. All other steel sheet and plate shall conform to AASHTO specification M223 (ASTM A572), or approved equal. Supplement S18 of ASTM A6 regarding maximum tensile strength shall apply.
13. All structural steel including fasteners shall be hot dip galvanized after fabrication unless otherwise noted.
14. Galvanize-Control Silicon, typical. Silicon content of the base metal shall be in the range of 0 to 0.04% or 0.15 to 0.25%.
15. Footing concrete shall be Commercial Grade Concrete (fc=3000 psi) per Specification Section 440. Grout in grout pad shall be non-shrink high early strength grout (non-ferrous) with a minimum strength of 5000 psi. Footing concrete may be used as an alternate to grout.
16. Reinforcing steel shall conform to AASHTO M31, Grade 60 (ASTM A615 or A706). A min. lap splice length of 32 bar diameters shall be used unless shown otherwise.
17. Computed deflection of these poles at full design loading shall be limited to 5% of the pole length. Computed dead load deflection of the poles shall be limited to 1% of the pole length. Pole shall be raked to offset the computed dead load deflection. Luminaire arms and pole extensions to support luminaire arms shall meet requirements of drawing TM629.
18. Hubs for cabinets and/or other appurtenances shall be welded into the pole prior to galvanizing. Poles may be tapped for up to 1" galvanized bolts after pole has been galvanized.
19. Longitudinal seam welds within 6" of a cirumferential weld shall be complete penetration welds. Weld inspection shall be in accordance with AWS D1.1 and the special provisions. Inspect seam welds using cyclically loaded criteria. Hubs shall be 3000# threaded forged carbon steel flat weld hubs by Anvil Products Inc., Phoenix Forging Co., Bonney Forge & Tool Works or approved equal.
20. Grounding terminal shall be ½" UNC x 1½" Type 308, 309 or 310 threaded stainless steel weld studs.
21. Tighten anchor rods according to 962.46(jX2).
22. Round and smooth all edges along electrical way.

Allowable Span Wire Tension, Lbs. (Horizontal) ①②									
No Luminaire					With 20' max. Luminaire Arm and 40' max. Mounting Height				
POLE	MAH=28'	MAH=30'	MAH=32'	MAH=34'	POLE	MAH=28'	MAH=30'	MAH=32'	MAH=34'
STP1	2500	2330	2183	2053	STP1L	1663	1550	1450	1365
STP2	3750	3495	3275	3078	STP2L	2913	2715	2543	2390
STP3	5000	4660	4365	4105	STP3L	4163	3880	3635	3418
STP4	6250	5825	5458	5130	STP4L	5413	5045	4725	4443
STP5	7500	6993	6548	6158	STP5L	6663	6210	5818	5470
STP6	8750	8158	7640	7183	STP6L	7913	7375	6908	6495
STP7	10000	9333	8750	8235	STP7L	9163	8542	8002	7524

① MAH = Messenger cable Attachment Height.
② Group II Dead load and wind load span wire design tension.

1. Anchor Rods and pole details shall be according to TM652.
2. Foundation details shall be according to TM653.

Standard Design Base Reactions				
Strain Pole Type	Wind Load Case II			
	Axial (Kips)	Shear (Kips)	Moment (Kip-ft)	Torsion* (Kip-ft)
STP1, STP1L	2.49	6.66	132.8	6.70
STP2, STP2L	2.55	7.91	167.8	6.70
STP3, STP3L	3.06	9.33	205.9	6.70
STP4, STP4L	3.37	10.58	240.9	6.70
STP5, STP5L	3.43	11.95	277.9	6.70
STP6, STP6L	3.64	13.20	312.9	6.70
STP7, STP7L	4.54	14.45	347.9	6.70

* - Torsion is equal to 0 Kip-ft for STP Pole Types.

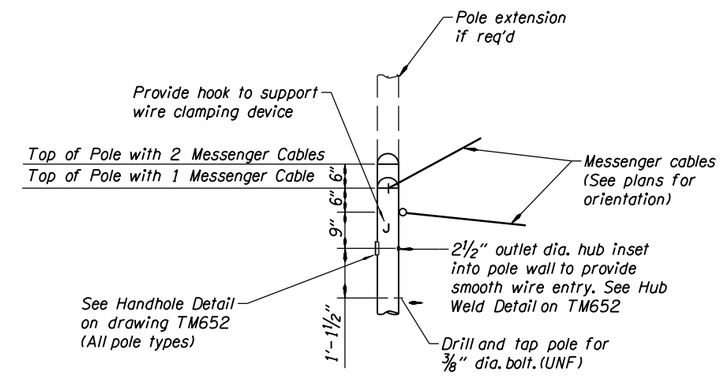

TERMINAL CABINET MOUNTING PROVISIONS FOR STRAIN POLES

Luminaire Arm Reactions			
Arm Lengths	Wind Load Case II		
	Axial (Kips)	Shear (Kips)	Moment (Kip-ft)
6'	0.03	0.31	1.49
10'	0.06	0.38	2.85
15'	0.08	0.47	4.96
20'	0.05	0.55	7.24

CALC. BOOK NO.	BASELINE REPORT DATE	ACCOMPANIED BY DWGS.	SHEET
5345	07-JAN-2011	TM652, TM653, TM660	2 OF 2

NOTE: All material and workmanship shall be in accordance with the current Oregon Standard Specifications

The selection and use of this Standard Drawing, while designed in accordance with generally accepted engineering principles and practices, is the sole responsibility of the user and should not be used without consulting a Registered Professional Engineer.

OREGON STANDARD DRAWINGS
TRAFFIC STRAIN POLE SUPPORTS

NOTES, REACTIONS, AND DETAILS
2015

DATE	REVISION DESCRIPTION

tm661.dgn 11-JUL-2014

TM661

Effective Date: December 1, 2015 - May 31, 2016

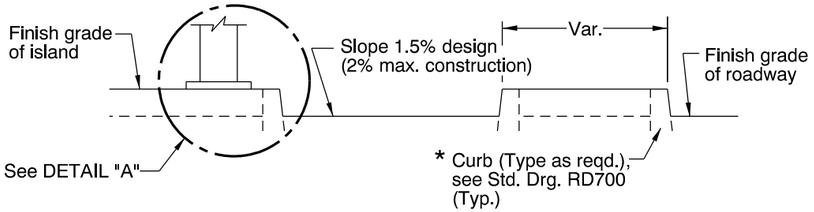

SECTION A-A

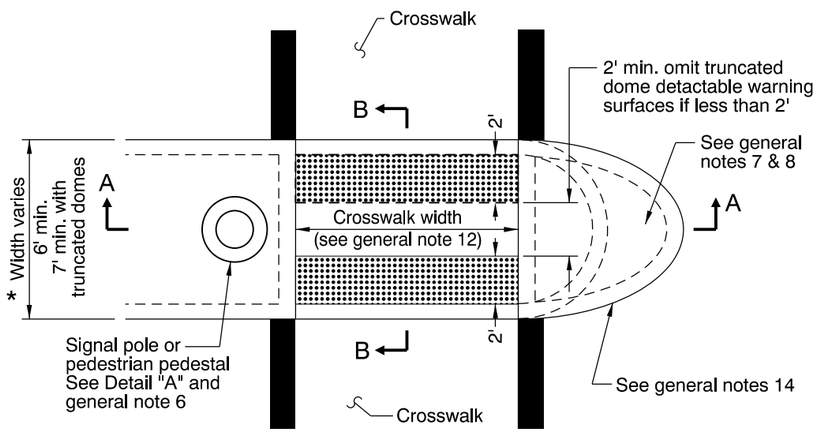

PLAN VIEW

* See general note 13

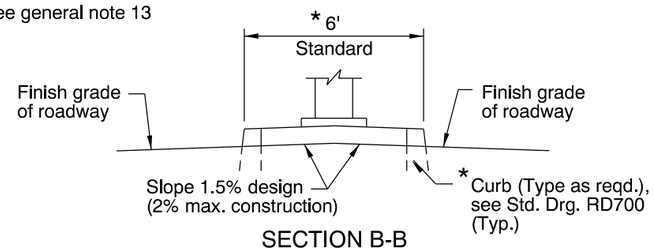

SECTION B-B

RAISED MEDIAN ISLAND DETAIL

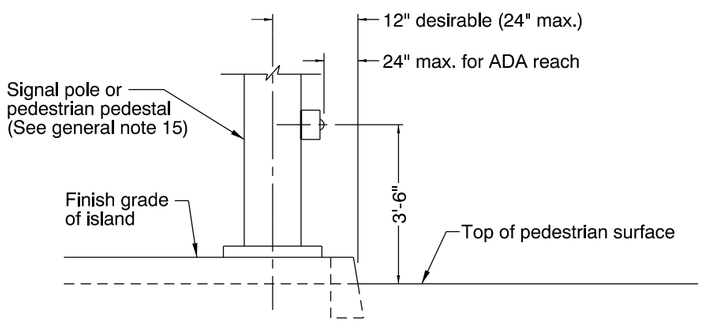

DETAIL "A"

(See general note 6)

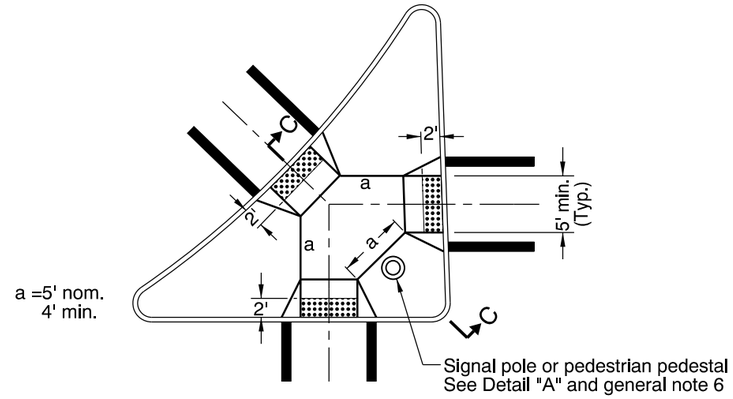

PLAN VIEW

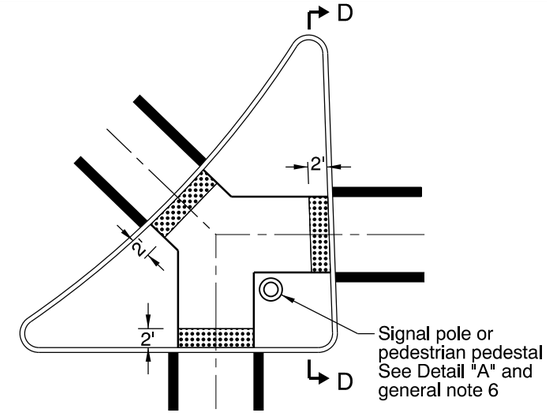

PLAN VIEW

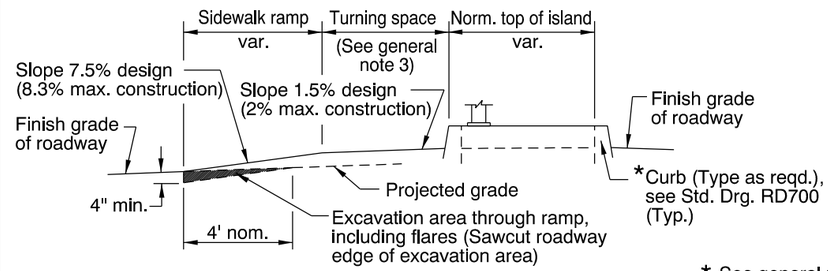

SECTION C-C

LOWERED ISLAND DETAIL

* See general note 13

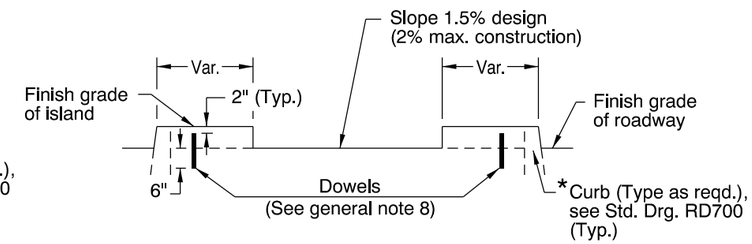

SECTION D-D

CUT THROUGH ISLAND DETAIL

RAISED RIGHT TURN CHANNELIZATION ISLAND

GENERAL NOTES FOR ALL DETAILS:

1. Accessible route islands are based on United States Access Board Standards.
2. Place truncated dome detectable warning surface in the lower 2' adjacent to traffic of throat of ramp only. For details not shown, see Std. Drg. RD759.
3. For lowered island, lower grade of island interior as reqd. to accomplish a min. 5'x5' turning space in center of island.
4. Locate poles, pedestals, etc. so that a min. 5' x 5' clear space is available in the turning space.
5. Turning space, in lowered island, shall have a slope of 1.5% design (2% max. construction).
6. Locate pedestrian pushbuttons, etc., so they are accessible from turning space or cut through area (See Detail "A").
7. The min. area of islands that contain signal poles, pedestals, etc., shall be 75 sq. ft. Square feet to be measured to outer perimiter of entire island.
8. For cut through islands dowel each island segment to the pvmt. with a min. of 2, ¾" dia. dowels. Dowel the nose section of the raised median island with a minimum of 2, ¾" dia. dowels. Place dowels as directed.
9. Align ramps for lowered island and cut through island with the crosswalk.
10. See Std. Drgs. RD700, RD701, RD705, RD706 & RD755 for additional details.
11. See Std. Drg. RD705 for expansion and contraction joint spacing.
12. See Std. Drgs. TM503 & TM530 for crosswalk markings, widths, etc.
13. Curb type and median width as shown on plans or as directed. Type A or Type C islands are acceptable alternates, see Std. Drg. RD705.
14. For island nose treament, see Std. Drg. RD707.
15. See Traffic Standard Drawings for signal pole and pedestrian pedestal details.
16. See project plans for details not shown.

Truncated dome detectable warning surface

CALC. BOOK NO. N/A

BASELINE REPORT DATE 21-JUL-2015

NOTE: All material and workmanship shall be in accordance with the current Oregon Standard Specifications

The selection and use of this Standard Drawing, while designed in accordance with generally accepted engineering principles and practices, is the sole responsibility of the user and should not be used without consulting a Registered Professional Engineer.

OREGON STANDARD DRAWINGS

ACCESSIBLE ROUTE ISLANDS

2015

DATE	REVISION DESCRIPTION
01-2015	REVISED DETAILS & NOTES
07-2015	REVISED & ADDED NOTES

rd710.dgn 21-JUL-2015

RD710

Effective Date: December 1, 2015 - May 31, 2016

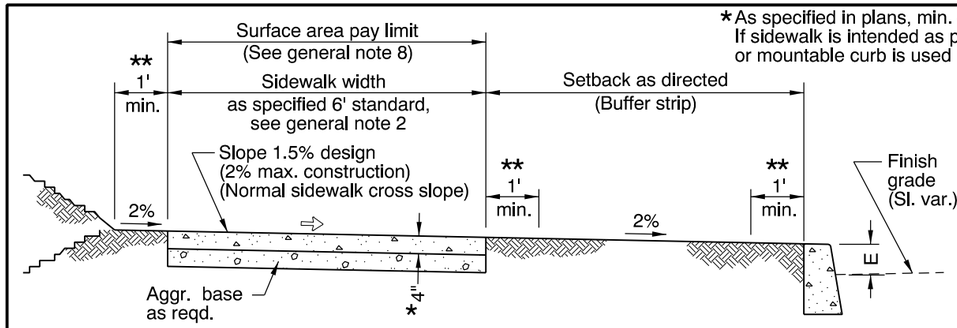

TYPICAL SETBACK SIDEWALK CROSS SECTION
E = curb exposure, see general note 6

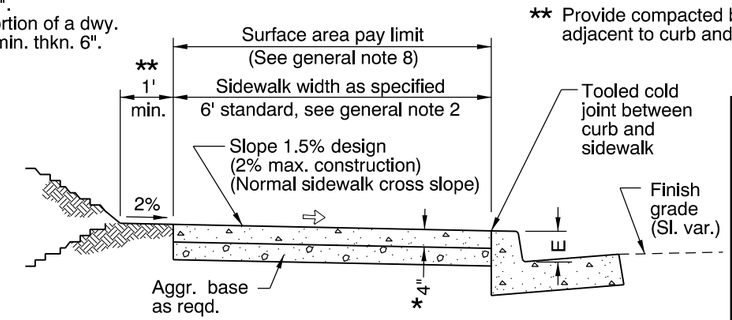

TYPICAL CURB SIDEWALK CROSS SECTION
E = curb exposure, see general note 6

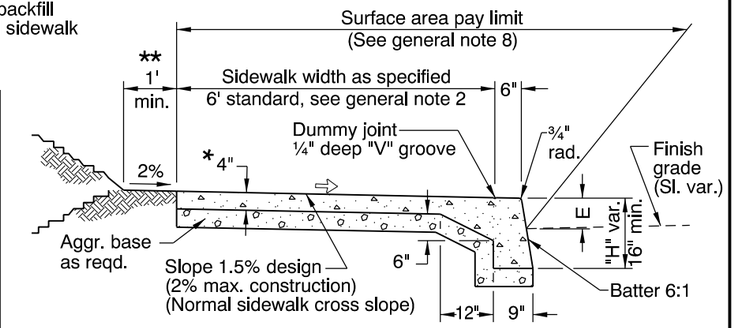

TYPICAL MONOLITHIC CURB & SIDEWALK
E = curb exposure, see general note 6

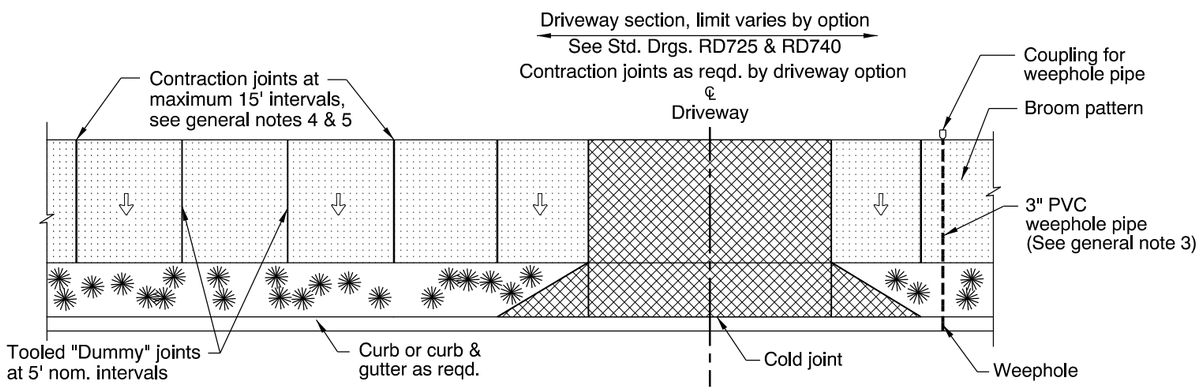

TYPICAL PLAN VIEW - SEPARATED SIDEWALK

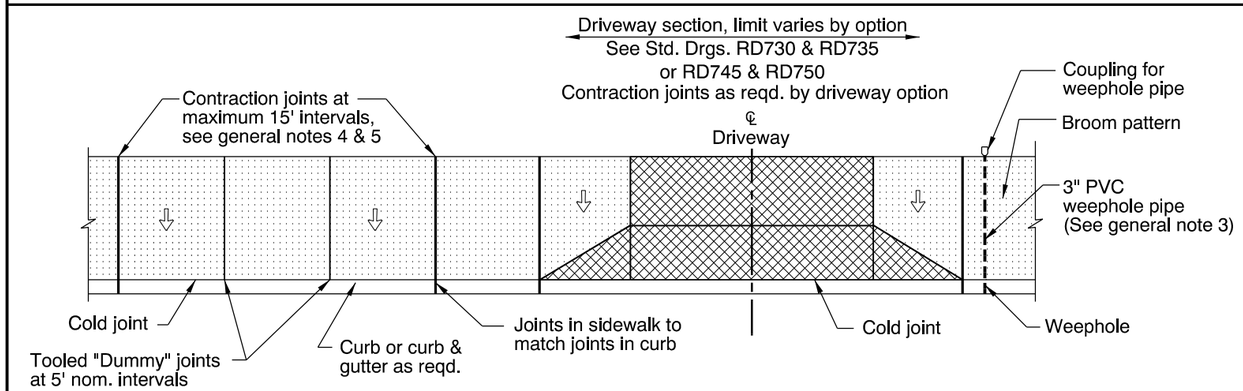

TYPICAL PLAN VIEW - CURB LINE SIDEWALK

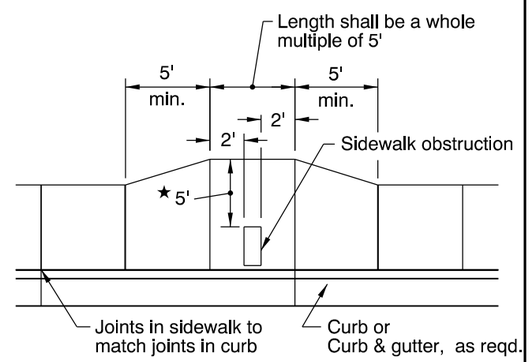

★ When site constraints prohibit a 5' passage, the Engineer may direct this to be reduced, but no less than 4'.

REQUIRED SIDEWALK WIDENING AROUND OBSTRUCTIONS

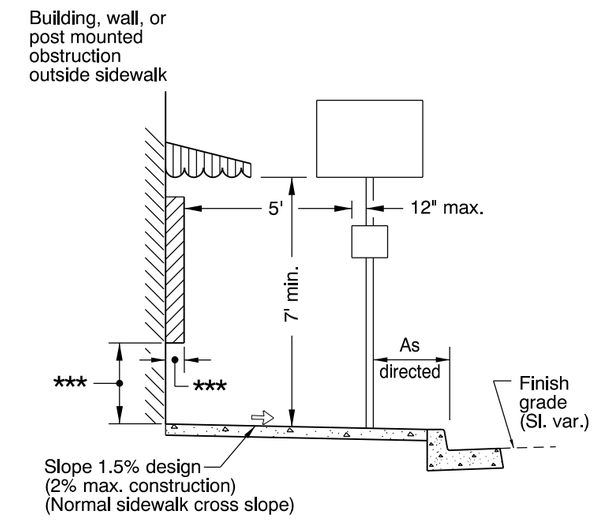

*** Objects with base below 2'-4" may protrude any distance as long as the 5' circulation path is maintained. When an object with a base higher than 2'-4" protrudes further than 4" provide a curb below protrusion to delineate edge.

CLEAR CIRCULATION PATH

Sidewalk

General configuration of driveway pay limit (See general note 8), varies by option.

Slope 1.5% design
(2% max. construction)
(Normal sidewalk cross slope)

GENERAL NOTES FOR ALL DETAILS:

1. Include additional paved or unpaved 2' clearance to vertical faces higher than 5' such as retaining walls, sound walls, fences and buildings.
2. Curb type and sidewalk width as shown on plans or as directed. On sidewalks 8' and wider, provide a longitudinal joint at the midpoint.
3. Install 3" pvc weephole pipes in sidewalks where shown on plans, and allowed by jurisdiction. Place contraction joint over top of pipe.
4. Const. expansion joints at 200' maximum spacing, and at points of tangency, and at ends of each driveway. For monolithic curb & sidewalk, const. expansion joints at 45' maximum spacing.
5. Const. contraction joints at 15' maximum spacing, and at ends of each driveway and ramp.
6. For curb details, see Std. Drgs. RD700 & RD701.
7. Sidewalk details are based on United States Access Board Standards.
8. For driveway details not shown, see Std. Drgs. RD725, RD730, RD735, RD740, RD745 & RD750.
9. See project plans for details not shown.

The selection and use of this Standard Drawing, while designed in accordance with generally accepted engineering principles and practices, is the sole responsibility of the user and should not be used without consulting a Registered Professional Engineer.

CALC. BOOK NO. N/A

BASELINE REPORT DATE 21-JUL-2015

NOTE: All material and workmanship shall be in accordance with the current Oregon Standard Specifications

OREGON STANDARD DRAWINGS

SIDEWALKS

2015

DATE	REVISION DESCRIPTION
01-2015	REVISED DETAILS & ADDED NOTES
07-2015	REVISED NOTES

rd720.dgn 21-JUL-2015

RD720

Effective Date: December 1, 2015 - May 31, 2016

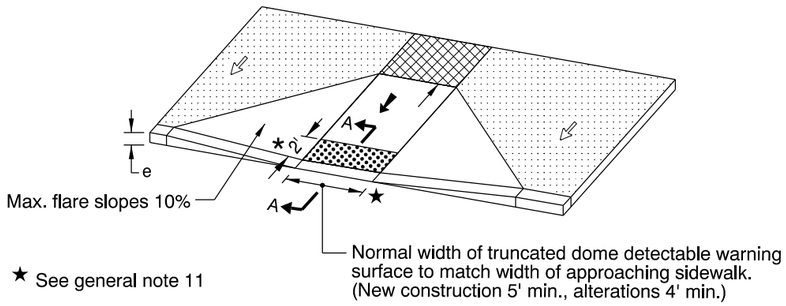

PERPENDICULAR SIDEWALK RAMP DETAIL

(Use "Parallel Sidewalk Ramp Detail" or "Combination Sidewalk Ramp Detail" when reqd. turning space cannot be obtained)

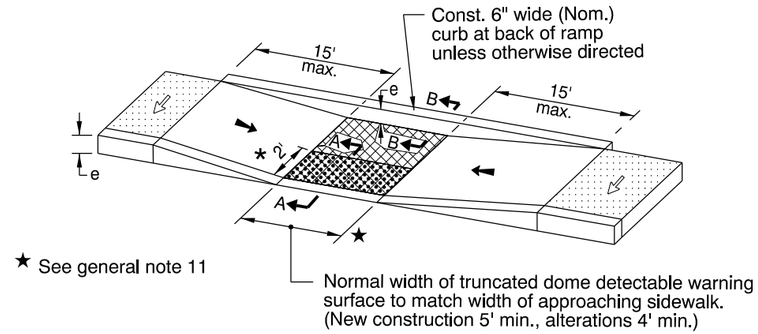

PARALLEL SIDEWALK RAMP DETAIL

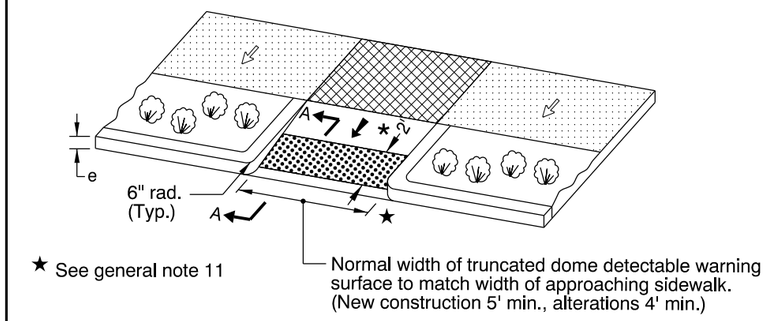

PERPENDICULAR SIDEWALK RAMP DETAIL (THROUGH BUFFER STRIP)

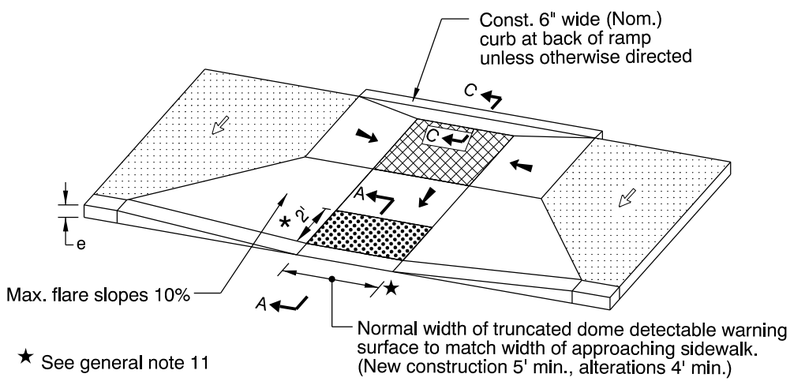

COMBINATION SIDEWALK RAMP DETAIL

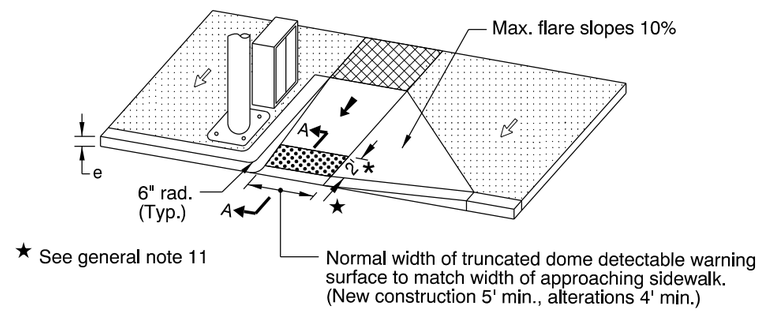

PERPENDICULAR SIDEWALK RAMP DETAIL (WITH SINGLE FLARE)

(Use "Parallel Sidewalk Ramp Detail" or "Combination Sidewalk Ramp Detail" when reqd. turning space cannot be obtained)

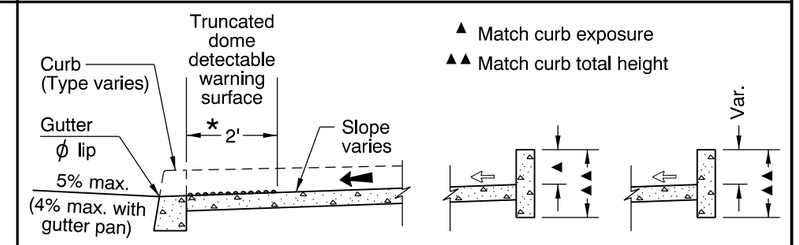

Sidewalk

Turning space
Min. level area 4' x 4'
4' x 5' when constrained (with longer dimension in direction of ramp travel).
For the purposes of this application, a 2% maximum construction slope (for drainage) is considered level.

Truncated dome detectable warning surface

⇦ Slope 1.5% design (2% max. construction) (Normal sidewalk cross slope)

🡄 Slope 7.5% design (8.3% max. construction) (Ramp length 15' max.)

★2' See general note 5

GENERAL NOTES FOR ALL DETAILS:

1. Sidewalk ramp details are based on United States Access Board Standards.
2. See Std. Drgs. RD700 & RD701 for curbs. See Std. Drg. RD720 for sidewalks. See Std. Drgs. TM503 & TM530 for crosswalk markings, widths, etc.
3. Tooled joints are required at all sidewalk ramp slope break lines.
4. Sidewalk curb ramp slopes shown are relative to the true level horizon (Zero bubble).
5. Place truncated dome detectable warning surface in the lower 2' adjacent to traffic of throat of ramp only. For details not shown, see Std. Drg. RD759.
6. Side flares that are not part of the path of travel may be any slope.
7. Sidewalk flare is not necessary where the ramp is protected from pedestrian cross-travel.
8. For the purpose of this drawing, a curb ramp is considered "perpendicular" if the angle between the longitudinal axis of the ramp and a line tangent to the curb at the ramp center is 75° or greater.
9. Ramps for paths intersecting a roadway should be full width of path, excluding flares. When a ramp is used to provide bicycle access from a roadway to a sidewalk, the ramp should be 8' wide.
10. For sidewalk ramp placement options, see Std. Drgs. RD756 & RD757.
11. Check the gutter flow depth at ramp locations to assure that the design flood does not overtop the back of sidewalk at ramp. If overtopping occurs place an inlet at upstream side of ramp or perform other approved design mitigation.
12. Only use details allowed by jurisdiction.
13. Site conditions normally require a project specific design. See project plans for details not shown.

CALC. BOOK NO. N/A

BASELINE REPORT DATE 21-JUL-2015

NOTE: All material and workmanship shall be in accordance with the current Oregon Standard Specifications

The selection and use of this Standard Drawing, while designed in accordance with generally accepted engineering principles and practices, is the sole responsibility of the user and should not be used without consulting a Registered Professional Engineer.

OREGON STANDARD DRAWINGS

SIDEWALK RAMP DETAILS

2015

DATE	REVISION DESCRIPTION
01-2015	REVISED & ADDED NOTES
07-2015	ADDED DETAIL & REVISED NOTES

rd755.dgn 21-JUL-2015

RD755

Effective Date: December 1, 2015 - May 31, 2016

Tab with Title: Examples

SIGNAL LEGEND AND DETAILS
MONMOUTH-INDEPENDENCE HWY. AT 16TH ST.
ORE 51 M.P. 1.03

L E G E N D

C O N T R O L L E R S

- (C / 2070) Install model 2070 controller in model 332S cabinet

C A B I N E T S

- (332S) Install a model 332S cabinet & control equipment with riser frame, orient louvered door as shown
- (BMCL) Install base mounted service cabinet, 120/240 volt metered, for signal and signal pole mounted illumination systems
- (RTC) Install recessed terminal cabinet, see T.R.S. DWG NO. 12570 & 12571

P O L E S

- (SM / T) Install (T=type) standard traffic signal mast arm pole (See, "Pole Entrance Chart")
- (MA / L) Install (L=length) foot traffic signal mast arm
- (LA / L) Install (L=length) foot luminaire arm
- (EX / 1) Retain and protect existing power pole (Power source)

S I G N A L S

- (V / Ph) Install phase (Ph=phase) vehicle signal
- (C/B / Ph) Install phase (Ph=phase) countdown pedestrian signal with clamshell mount and pushbutton with 'H' mount

S I G N S

- (AL / 11) Install aluminum (30"x36", type "W7") "LEFT TURN YIELD ON GREEN BALL" sign (R10-12)
- (★) See signing plans for details on sign and attachment type

J U N C T I O N B O X E S

- (JB / 2) Install 22"x12"x12" (min. dimension) precast concrete junction box
- (JB / 3/T) Install tandem 30"x17"x12" (min. dimension) precast concrete junction boxes (See TM472 for details)

W I R E S

- [N-C] Install (N=number) No. 8 type THWN (Signal system common)
- [N/G] Install (N=number) No. (G=AWG wire size) type THWN wires
- [N|G] Install (N=number) No. (G=AWG wire size) type XHHW wires

C O N D U I T S

- (S) Install (S=size) inch electrical conduit
- (DC) Detector conduit (See Detector Plan)
- (IC) Interconnect conduit (See Interconnect Plan)
- (W) Install conduit and wire as required by power company

L E G E N D C O N T I N U E D

L U M I N A I R E S

- (LED) Install 250 watt light emitting diode luminaire. (See special provisions). Bond luminaire to pole grounding terminal
- (PE / 1) Install photocontrol electronic relay on pole, as per Std. Drg. No. TM465

F I R E P R E E M P T I O N

- (FN / Ch) Install channel(Ch=channel), (N=number) barrel fire preemption detector unit
- (FF / Ch) Install channel (Ch=channel) fire preemption detector feeder cable

(S) Ph Includes 3 spare wires for phase (Ph=phase) as per table

SIGNAL MOUNTING OPTIONS

B = Adjustable signal bracket assembly w/rain cap(s)
(Install 1" galvanized chase nipple)

SIGN MOUNTING OPTIONS

AB = Adjustable sign bracket assembly w/rain cap(s)

SIGNAL HEAD TYPES

2 = 12" R, 12" Y, 12" G
3L = 12" RLTA, 12" YLTA, 12" GLTA

Traffic Roadway Section Approval

REGISTERED PROFESSIONAL ENGINEER
XX,XXX
NOT FOR CONSTRUCTION
OREGON
JULY 11, 2000
XXXXX X. XXXXXX
Expires Dec. 31, 200X

OREGON DEPARTMENT OF TRANSPORTATION
TRAFFIC ROADWAY SECTION

REGION AND CONSULTANT LOGO

OR51 AT 16TH STREET (INDEPENDENCE)
MONMOUTH-INDEPENDENCE HIGHWAY
POLK COUNTY

DESIGNED BY: Arlo Bones
REVIEWED BY: Arlo Bones
DRAWN BY: Arlo Bones
FC: 43 MP: 1.03

LEGEND

ACCOMPANIED BY DWGS. TM450, TM451, TM464, TM466, TM468, TM471, TM476, TM487, TM488, TM499, TM650, TM651, TM652, 12566 thru 12571

TSSU No. 03037 T.R.S. DWG. NO. 12565

SIGNAL PLAN
MONMOUTH-INDEPENDENCE HWY. AT 16TH ST.
ORE 51 M.P. 1.03

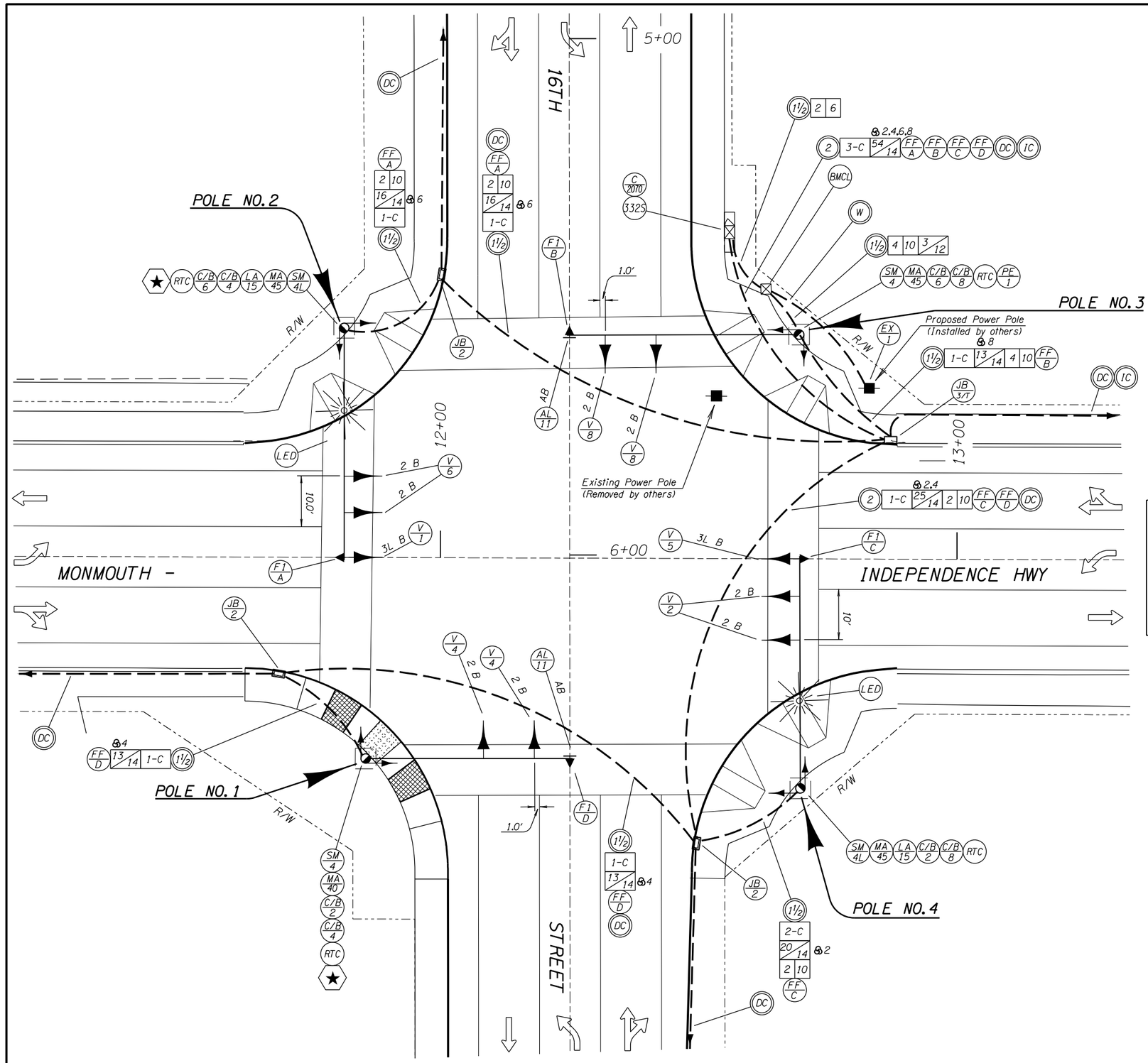

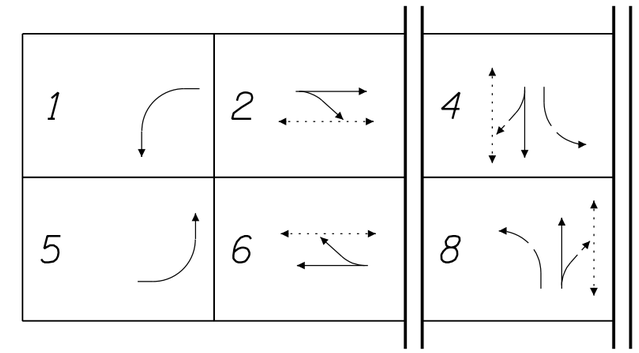

NORMAL PHASE ROTATION

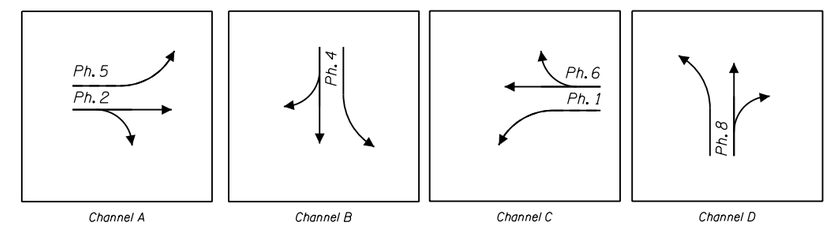

FIRE PREEMPTION OPERATION

For Legend See T.R.S. Dwg. No. 12565

Traffic Roadway Section Approval

REGISTERED PROFESSIONAL ENGINEER XX,XXX OREGON JULY 11, 2000 XXXXX X. XXXXXX Expires Dec. 31, 200X

NOT FOR CONSTRUCTION

OREGON DEPARTMENT OF TRANSPORTATION
TRAFFIC ROADWAY SECTION

REGION AND CONSULTANT LOGO

OR51 AT 16TH STREET (INDEPENDENCE)
MONMOUTH-INDEPENDENCE HIGHWAY
POLK COUNTY

DESIGNED BY: Arlo Bones
REVIEWED BY: Arlo Bones
DRAWN BY: Arlo Bones
FC: 000 MP: 000

SIGNAL PLAN

TSSU No. 03037 T.R.S. DWG. NO. 12566

POLE ENTRANCE CHART

			EQUIPMENT ON POLE					EQUIPMENT ON MAST ARM									FOUNDATION INFORMATION (See Std. Drg. TM653)		LUMINAIRES				FIXTURE	
POLE NO.	DWG. NO.	TYPE	PED. SIGNAL DEG.	TERM. CABINET DEG.	SIGN DEG.	TRAFFIC SIGNAL DEG.	PHOTO CELL DEG.	ARM LENGTH	D 1	D 2	D 3	D 4	D 5	D 6	D 7	D 8	FOUNDATION NUMBER	REQUIRED FOUNDATION DEPTH	ARM LENGTH	ARM DEG.	MOUNTING HEIGHT	TYPE	TYPE	WATTAGE
1	12566	SM-4	90 &180	180	270	-	-	40	0.50 / SA	1.50 / F	7.00 / V2	17.00 / V2	———	———	———	———	4	15'	-	-	-	-	-	-
2	12566	SM-4L	90 & 180	180	270	-	-	45	0.50 / V3L	1.50 / F	8.00 / V2	16.00 / V2	———	———	———	———	5	16'	15	0	40.0	LED	Type 3	250
3	12566	SM-4	90 & 180	180	-	-	90	45	0.50 / SA	1.50 / F	7.00 / V2	17.00 / V2	———	———	———	———	4	15'	-	-	-	-	-	-
4	12566	SM-4L	90 & 180	180	-	-	-	45	0.50 / V3L	1.50 / F	8.00 / V2	16.00 / V2	———	———	———	———	5	16'	15	0	40.0	LED	Type 3	250

Foundation Depth Based on ODOT Geotech Report dated 12/12/2012

POLE INFORMATION
MONMOUTH-INDEPENDENCE HWY. AT 16TH ST.
ORE 51 M.P. 1.03

NOTE

Blanks in the chart shown indicate no equipement at that location.

BRACKET MOUNT

V2 = Traffic Signal Type 2. Adjustable Bracket Mount (See Std. Dwg. TM462)
V3L = Traffic Signal Type 3L. Adjustable Bracket Mount (See Std. Dwg. TM462)
SA = Sign. 30" x 36" Aluminum w/Adjustable Bracket Mount (See Std Dwg TM465)

MISC. ITEMS

F = Fire Preemtion (See Std. Dwg. TM465)

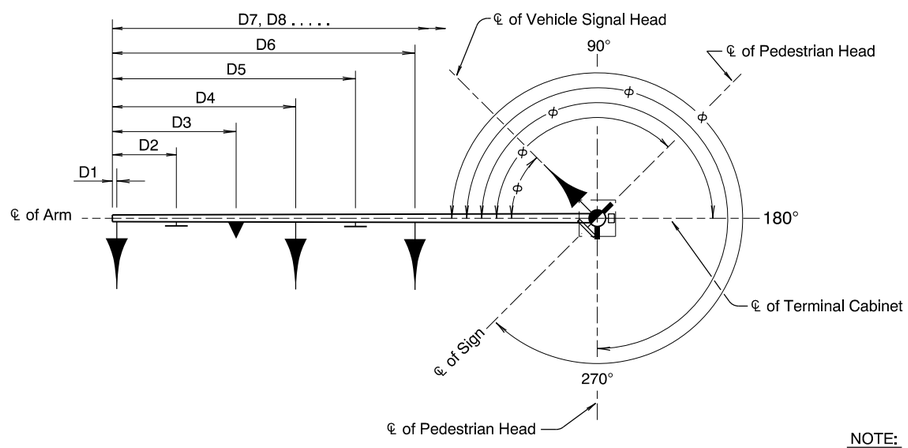

MAST ARM POLE ORIENTATION DIAGRAM

NOTE

Equipment shown on orientation diagram is clarification of distance and angles of equipment that may be located on a Mast Arm or Signal Pole

NOTE:
All dimensions shown are in feet unless otherwise noted.

Traffic Roadway Section Approval

REGISTERED PROFESSIONAL ENGINEER
XX,XXX
NOT FOR CONSTRUCTION
OREGON
JULY 11, 2000
XXXXX X. XXXXXX
Expires Dec. 31, 200X

OREGON DEPARTMENT OF TRANSPORTATION
TRAFFIC ROADWAY SECTION

REGION AND CONSULTANT LOGO

OR51 AT 16TH STREET (INDEPENDENCE)
MONMOUTH-INDEPENDENCE HIGHWAY
POLK COUNTY

DESIGNED BY: Arlo Bones
REVIEWED BY: Arlo Bones
DRAWN BY: Arlo Bones
FC: 43 MP: 1.03

POLE INFORMATION

TSSU No. 03037 T.R.S. DWG. NO. 12567

DETECTOR PLAN
MONMOUTH-INDEPENDENCE HWY. AT 16TH ST.
ORE 51 M.P. 1.03

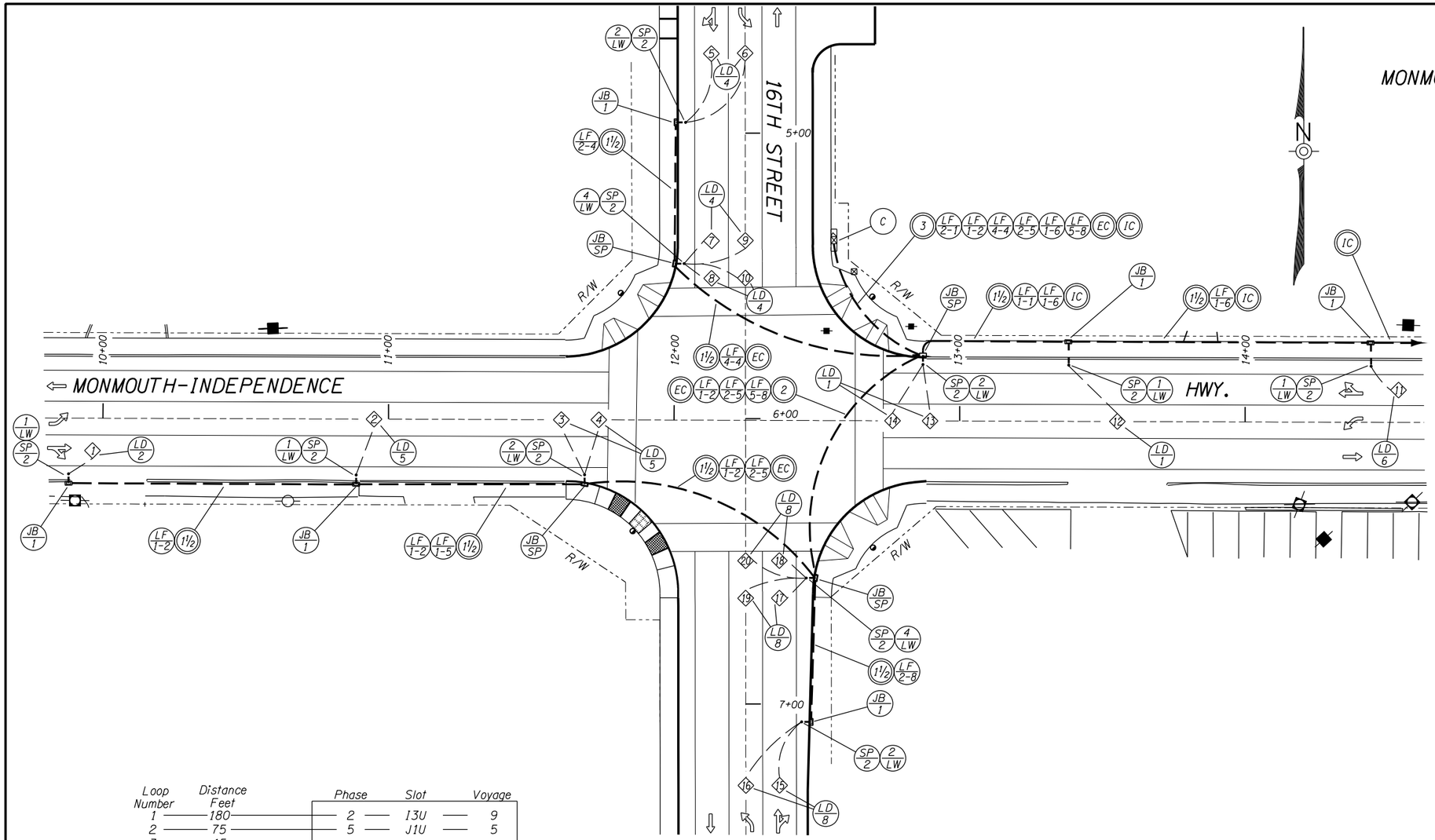

L E G E N D

C	Controller (See Signal Plan)
JB/SP	Junction box (See Signal Plan)
JB/1	Install 17"x10"x12" (min. dimension) precast concrete junction box
SP/S	Install 6" max. sand pocket block-out with (S=size) inch conduit to junction box
LD/Ph	Install phase (Ph=phase) 6' round or 4' diamond vehicle detector loop
LF/X-Ph	Install (X=number of cables) phase (Ph=phase) loop feeder cables
N/LW	Install (N=number) pair of loop wires
S	Install (S=size) inch electrical conduit
EC	Electrical conduit (See Signal Plan)
IC	Interconnect conduit (See Interconnect Plan)

Loop Number	Distance Feet	Phase	Slot	Voyage
1	180	2	13U	9
2	75	5	J1U	5
3	15	5	J1L	6
4	5			
5	75	4	I8U	14
6	75	4	I8L	15
7	15	4	I9U	16
8	5			
9	15	4	I9L	17
10	5			
11	180	6	J3U	19
12	25	1	I1U	1
13	15	1	I1L	2
14	5			
15	75	8	J8U	24
16	75	8	J8L	25
17	15	8	J9U	26
18	5			
19	15	8	J9L	27
20	5			

Controller Cabinet

LOOP DETECTOR WIRING DIAGRAM
"Distance" is from Stop Line to center of loop in feet

Traffic Roadway Section Approval

REGISTERED PROFESSIONAL ENGINEER
XX,XXX
OREGON
JULY 11, 2000
XXXXX X. XXXXXX
Expires Dec. 31, 200X

NOT FOR CONSTRUCTION

OREGON DEPARTMENT OF TRANSPORTATION
TRAFFIC ROADWAY SECTION

REGION AND CONSULTANT LOGO

OR51 AT 16TH STREET (INDEPENDENCE)
MONMOUTH-INDEPENDENCE HIGHWAY
POLK COUNTY

DESIGNED BY: Arlo Bones
REVIEWED BY: Arlo Bones
DRAWN BY: Arlo Bones
FC: 43 MP: 1.03

DETECTOR PLAN

TSSU No. 03037 T.R.S. DWG. NO. 12568

INTERCONNECT PLAN
MONMOUTH-INDEPENDENCE HWY. AT 16TH ST.
ORE 51 M.P. 1.03

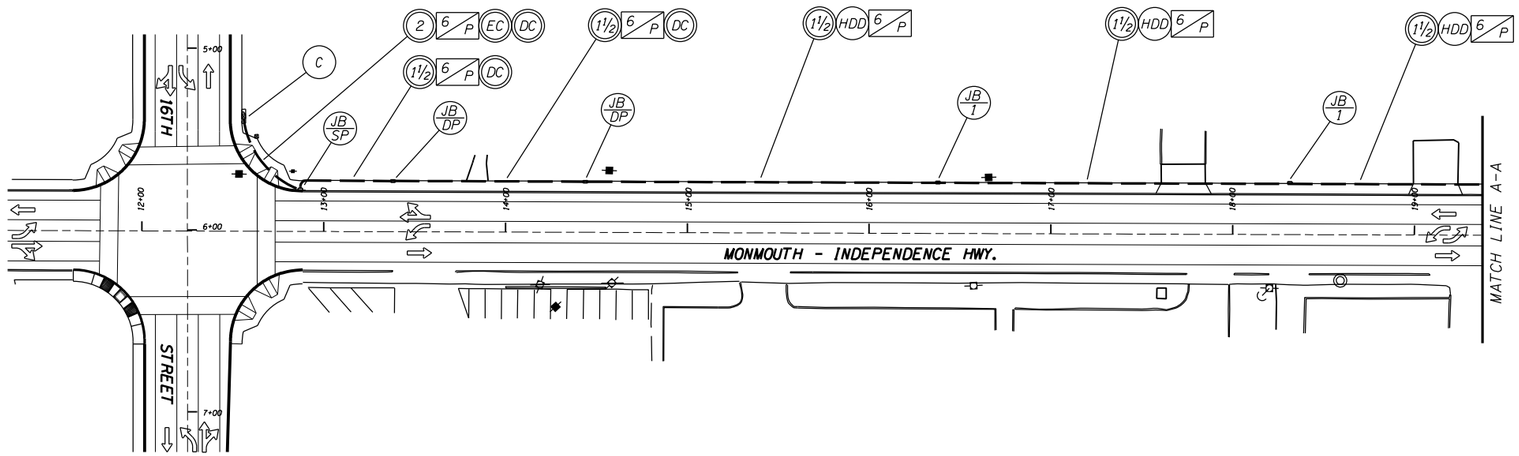

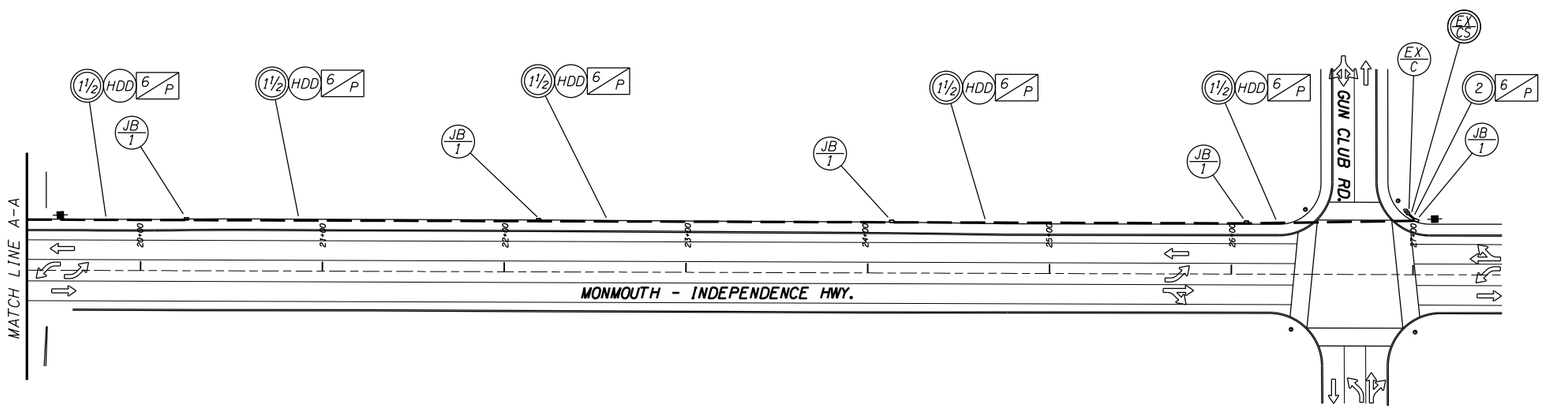

N

L E G E N D

- EX/C — Retain and protect existing Model 170 controller and Model 332 cabinet
- EX/CS — Retain and protect existing conduit stub
- C — Controller (See Signal Plan)
- JB/SP — Junction box (See Signal Plan)
- JB/DP — Junction box (See Detector Plan)
- EC — Electrical conduit (See Signal Plan)
- DC — Detector conduit (See Detector Plan)
- S — Install (S=size) inch electrical conduit
- N/P — Install (N=number) twisted pair PE-39 (gel filled) interconnect cable
- JB/1 — Install 17" x 10" x 12" (min. dimension) precast concrete junction box
- HDD — Install conduit by horizontal directional drilling. open trench not allowed.

Traffic Roadway Section Approval

REGISTERED PROFESSIONAL ENGINEER
XX,XXX
OREGON
JULY 11, 2000
XXXXX X. XXXXXX
Expires Dec. 31, 200X

NOT FOR CONSTRUCTION

OREGON DEPARTMENT OF TRANSPORTATION
TRAFFIC ROADWAY SECTION

REGION AND CONSULTANT LOGO

OR51 AT 16TH STREET (INDEPENDENCE)
MONMOUTH-INDEPENDENCE HIGHWAY
POLK COUNTY

DESIGNED BY: Arlo Bones
REVIEWED BY: Arlo Bones
DRAWN BY: Arlo Bones
FC: 43 MP: 1.03

INTERCONNECT PLAN

TSSU No. 03037 T.R.S. DWG. NO. 12569

DETAILS
MONMOUTH-INDEPENDENCE HWY. AT 16TH ST.
ORE 51 M.P. 1.03

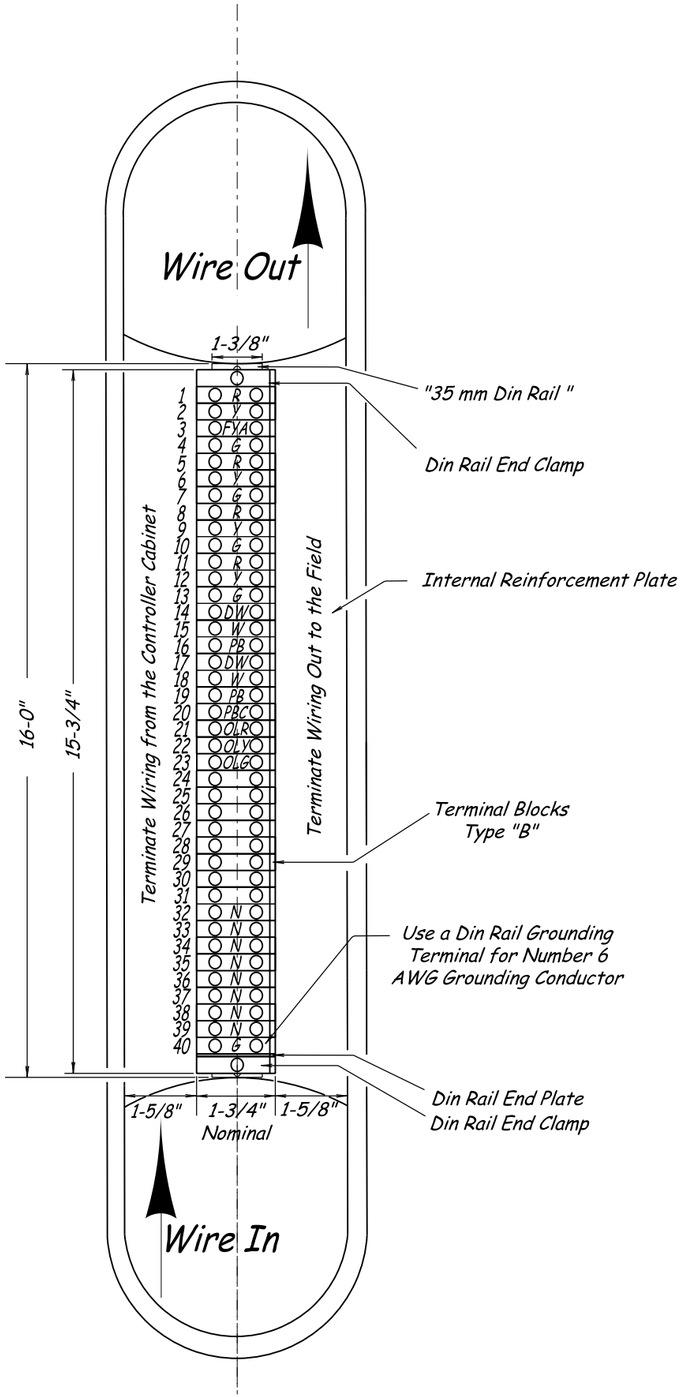

Front View

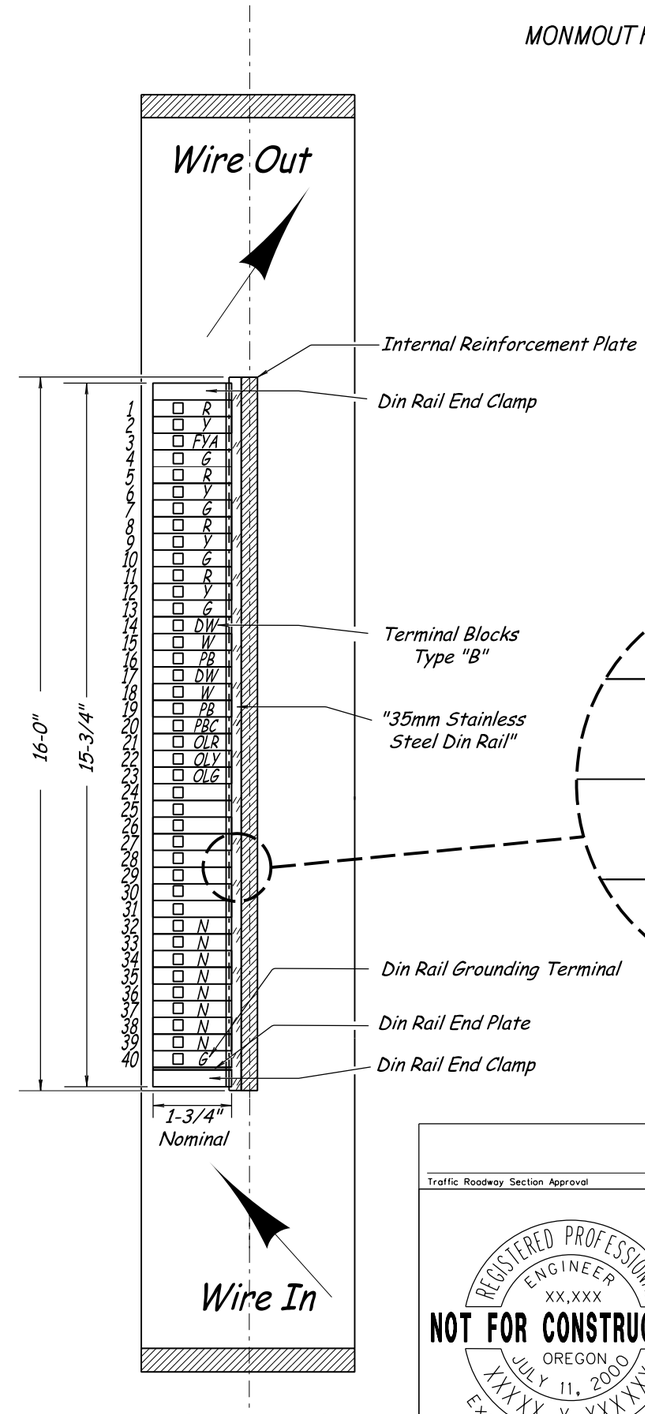

(Cross section)
Side View

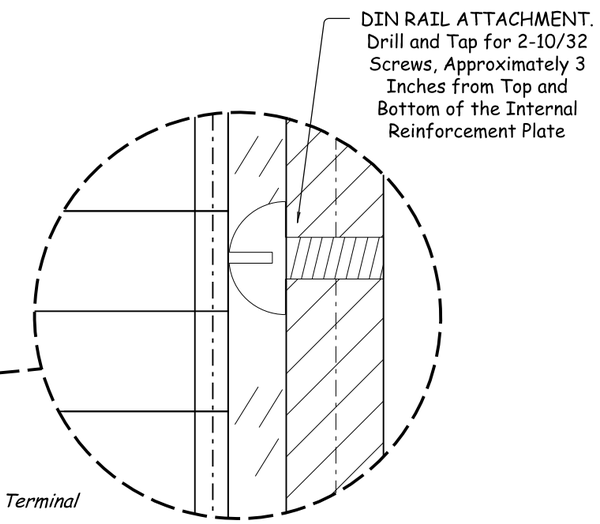

Din Rail Mounting Detail

Traffic Roadway Section Approval

REGISTERED PROFESSIONAL ENGINEER
XX,XXX
NOT FOR CONSTRUCTION
OREGON
JULY 11, 2000
XXXXX X. XXXXXX
Expires Dec. 31, 200X

OREGON DEPARTMENT OF TRANSPORTATION
TRAFFIC ROADWAY SECTION

REGION AND CONSULTANT LOGO

OR51 AT 16TH STREET (INDEPENDENCE)
MONMOUTH-INDEPENDENCE HIGHWAY
POLK COUNTY

DESIGNED BY: Arlo Bones
REVIEWED BY: Arlo Bones
DRAWN BY: Arlo Bones
FC: 43 MP: 1.03

DETAILS

TSSU No. 03037 T.R.S. DWG. NO. 12570

DET4405

DETAILS
MONMOUTH-INDEPENDENCE HWY. AT 16TH ST.
ORE 51 M.P. 1.03

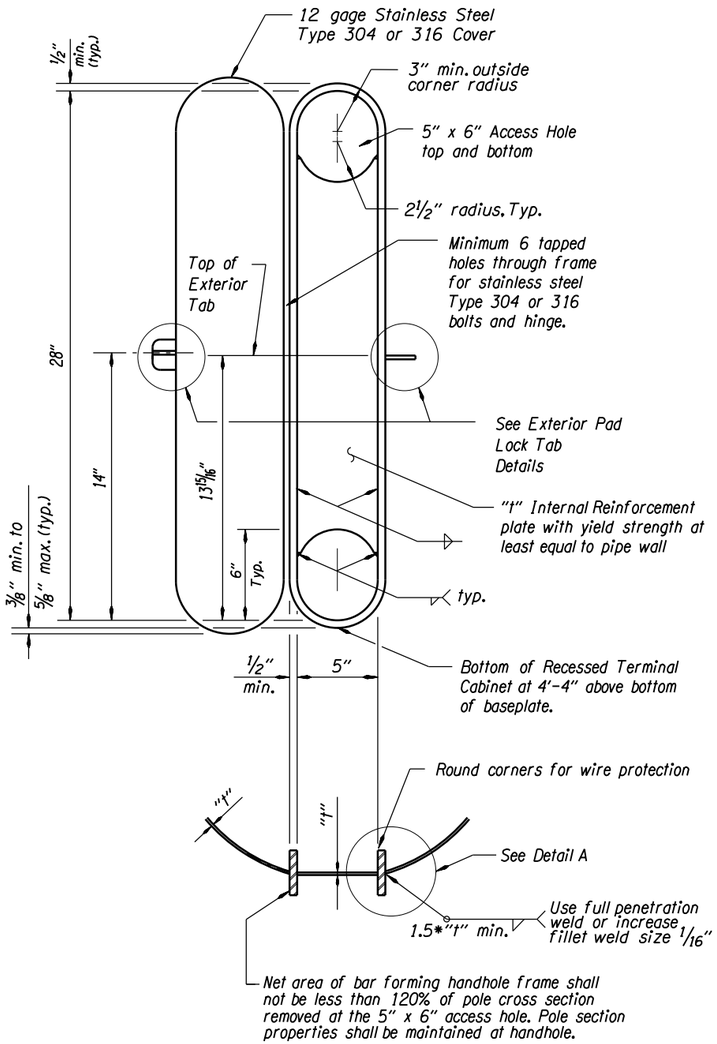

RECESSED TERMINAL CABINET DETAIL
No scale

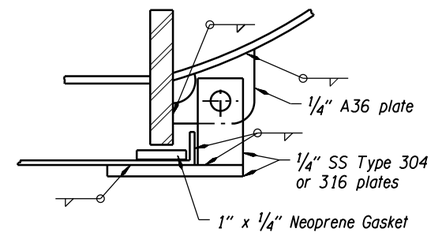

SECTION A-A
No scale

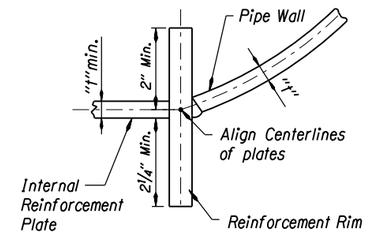

DETAIL A
No scale

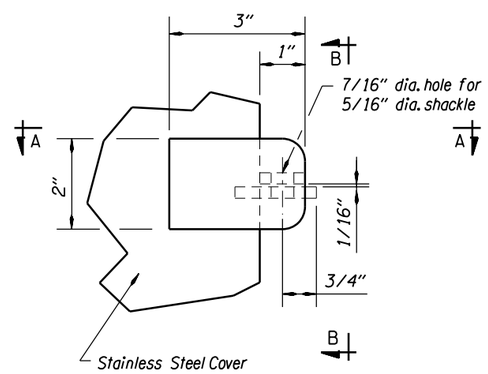

EXTERIOR PAD LOCK DETAILS
No scale

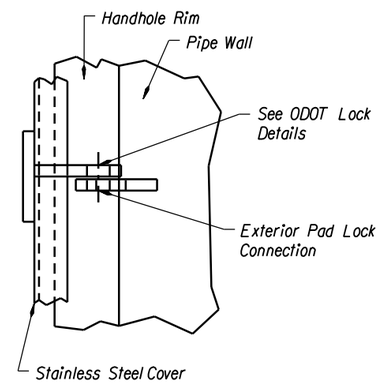

SECTION B-B
No scale

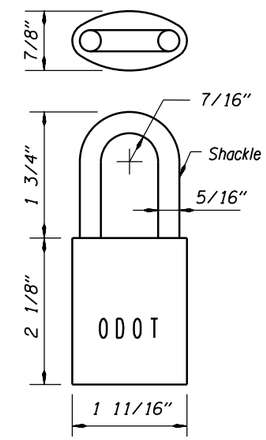

ODOT LOCK DETAILS
No scale
(ODOT Supplied Post Construction)

Traffic Roadway Section Approval

REGISTERED PROFESSIONAL ENGINEER
XX,XXX
NOT FOR CONSTRUCTION
OREGON
JULY 11, 2000
XXXXX X. XXXXXXX
Expires Dec. 31, 200X

OREGON DEPARTMENT OF TRANSPORTATION
TRAFFIC ROADWAY SECTION

REGION AND CONSULTANT LOGO

OR51 AT 16TH STREET (INDEPENDENCE)
MONMOUTH-INDEPENDENCE HIGHWAY
POLK COUNTY

DESIGNED BY: Arlo Bones
REVIEWED BY: Arlo Bones
DRAWN BY: Arlo Bones
FC: 43 MP: 1.03

DETAILS

TSSU No. 03037 T.R.S. DWG. NO. 12571

TEMPORARY SIGNAL PLAN
PACIFIC HWY.W. AT VILLA RD.
ORE99W MP. 22.88

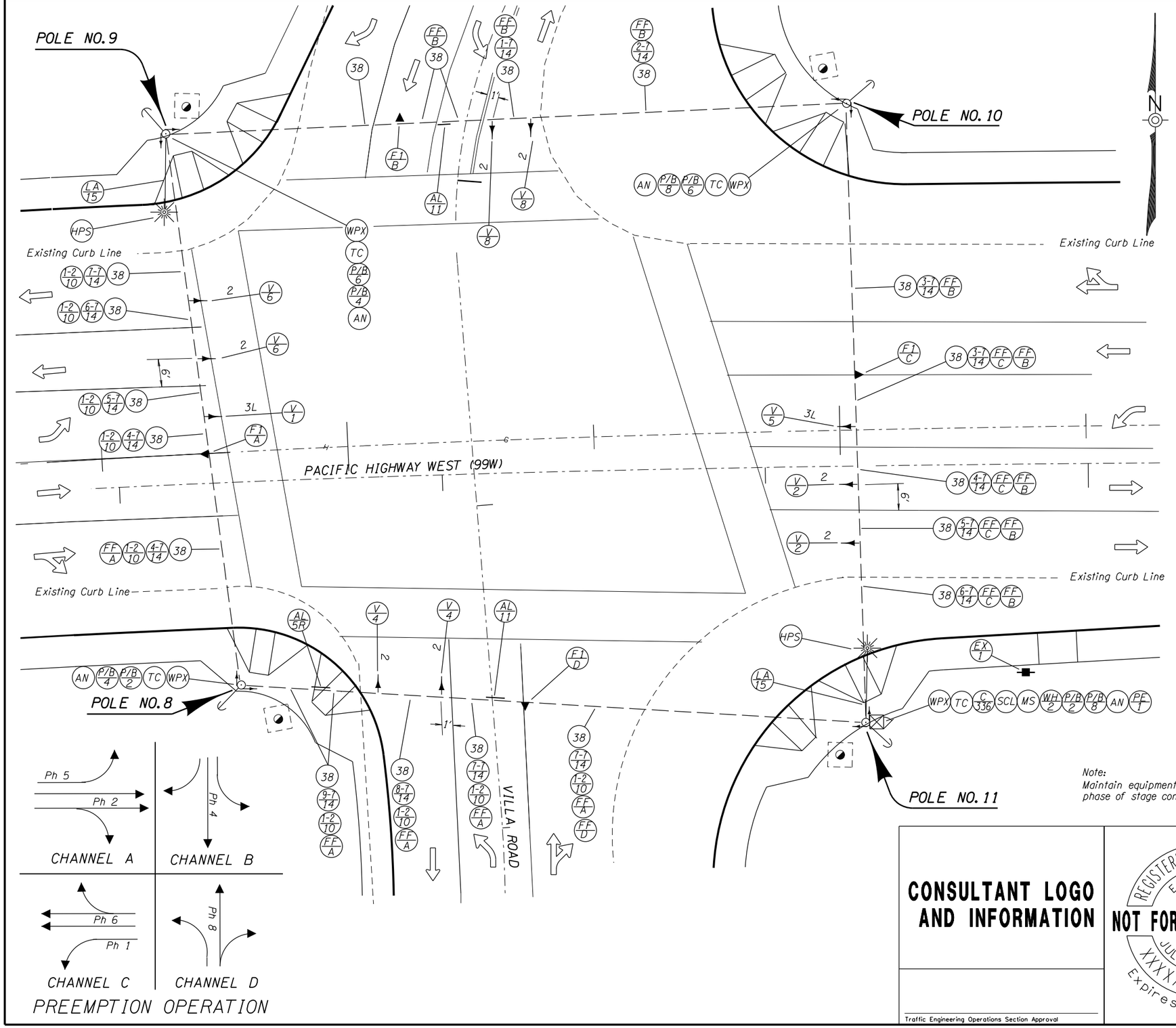

L E G E N D

EX/1	Retain and protect existing power pole (Power source)
C/336	Install model 170E/HC11 controller in a model 336 pole mounted cabinet & control equipment
LA/L	Install (L=length) foot luminaire arm
WPX	Install special (X = non-standard) treated wood strain pole (See."Pole Entrance Chart")
AN	Install back guy and anchor(s)
V/Ph	Install phase (Ph=phase) vehicle signal
P/B/Ph	Install phase (Ph=phase) pedestrian signal with clamshell mount and pushbutton with 'H' mount
AL/5R	Install aluminum (30"x36", type "W7") right arrow "ONLY" sign
AL/11	Install aluminum (30"x36", type "W7") "LEFT TURN YIELD ON GREEN BALL" sign (R10-12)
TC	Install terminal cabinet
SCL	Install service cabinet, 120/240 volt, for both signal and illumination circuits
MS	Install 120/240 volt meter base
WH/S	Install (S=size) inch weatherhead
X-N/G	Install (X=number of cables) control cables with (N=number) AWG No. (G=AWG wire size) conductors
38	Install galv. steel 3/8" messenger and 1/4" tether cables
FN/Ch	Install channel(Ch=channel), (N=number) barrel fire preemption detector unit
FF/Ch	Install channel (Ch=channel) fire preemption detector feeder cable
HPS	Install 400 watt high pressure sodium luminaire, type M-S-III, 120/240 dual voltage mag-regulator ballast
PE/1	Install photocontrol electronic relay on pole, as per T.M.S. Drg. No. TM422

2 = 12" R, 12" Y, 12" G
3L = 12" RLTA, 12" YLTA, 12" GLTA

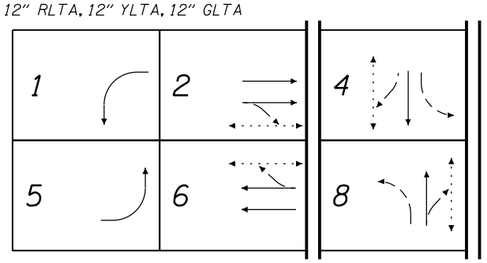

NORMAL PHASE ROTATION

Note:
Maintain equipment spacings for each phase of stage construction

CONSULTANT LOGO AND INFORMATION

Traffic Engineering Operations Section Approval

REGISTERED PROFESSIONAL ENGINEER
XX,XXX
OREGON
JULY 11, 2000
XXXXX X. XXXXXX
Expires Dec. 31, 200X

NOT FOR CONSTRUCTION

OREGON DEPARTMENT OF TRANSPORTATION
TRAFFIC ENGINEERING OPERATIONS SECTION

BRUTCHER ST. - EVEREST ST. SEC.
PACIFIC HIGHWAY WEST
YAMHILL COUNTY

DESIGNED BY: Arlo Bones
REVIEWED BY: Arlo Bones
DRAWN BY: Arlo Bones
FC: 91 MP: 22.88

ACCOMPANIED BY DWGS. TM400, TM401, TM404, TM406, TM408, TM411, TM416, TM417, TM418, TM419, TM421, TM427, TM428

TEMP SIGNAL PLAN

TSSU No. _____ T.R.S. DWG. NO. 16000

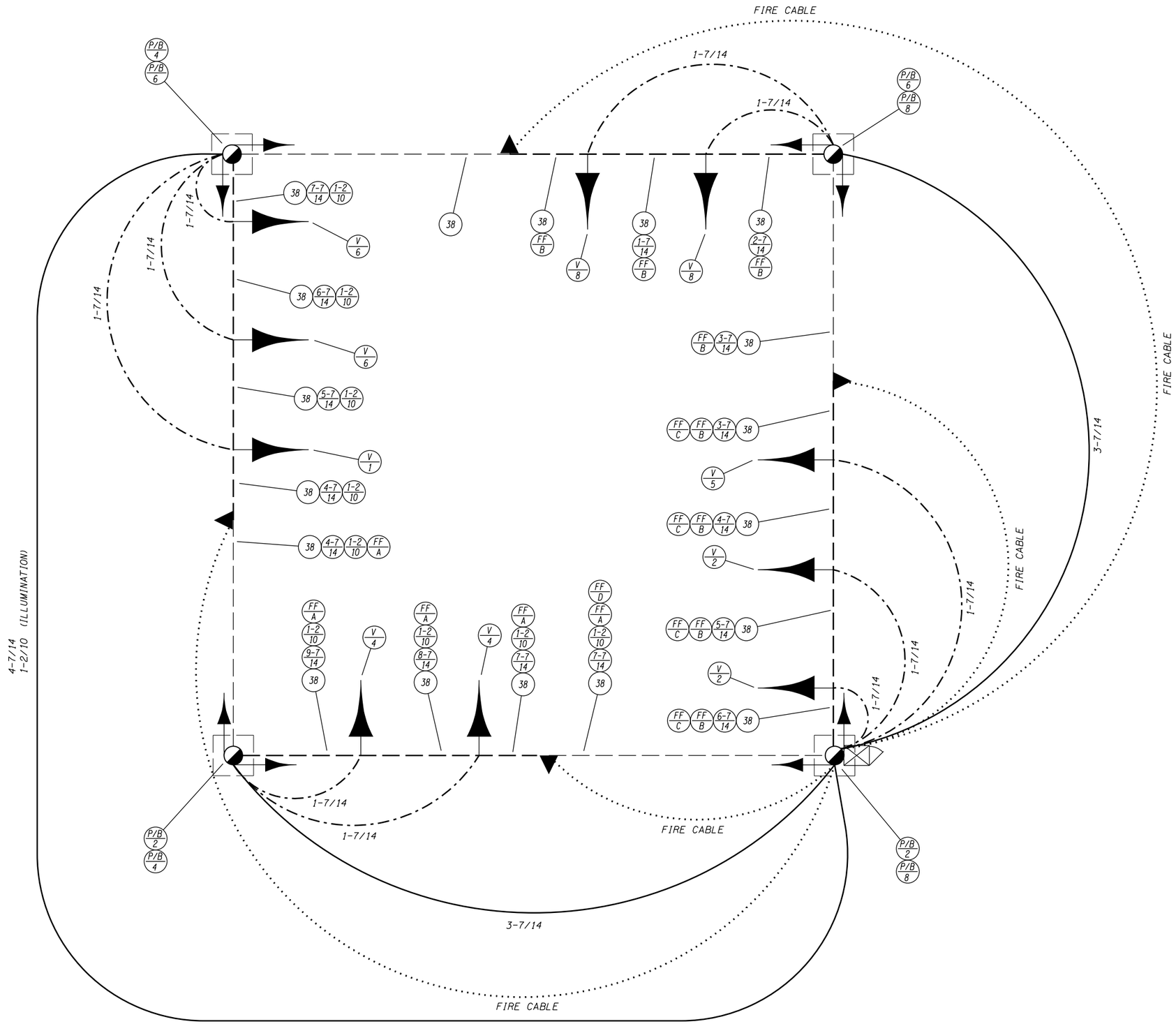
FIRE CABLE
1-7/14
1-7/14
P/B 4
P/B 6
P/B 6
P/B 8
38
7-7 14
1-2 10
V 6
38
6-7 14
1-2 10
V 6
38
5-7 14
1-2 10
V 1
38
4-7 14
1-2 10
38
4-7 14
1-2 10
FF A
38
FF B
V 8
38
1-7 14
FF B
V 8
38
2-7 14
FF B
FF B
3-7 14
38
FF C
FF B
3-7 14
38
V 5
FF C
FF B
4-7 14
38
V 2
FF C
FF B
5-7 14
38
V 2
FF C
FF B
6-7 14
38
FF A
1-2 10
9-7 14
38
V 4
FF A
1-2 10
8-7 14
38
V 4
FF A
1-2 10
7-7 14
38
FF D
FF A
1-2 10
7-7 14
38
4-7/14
1-2/10
(ILLUMINATION)
1-7/14
1-7/14
1-7/14
1-7/14
1-7/14
1-7/14
1-7/14
1-7/14
1-7/14
1-7/14
FIRE CABLE
FIRE CABLE
FIRE CABLE
FIRE CABLE
3-7/14
P/B 2
P/B 4
P/B 2
P/B 8

TEMPORARY SIGNAL PLAN
WELLS CREEK BR.
ORE 38 M.P. 19.05

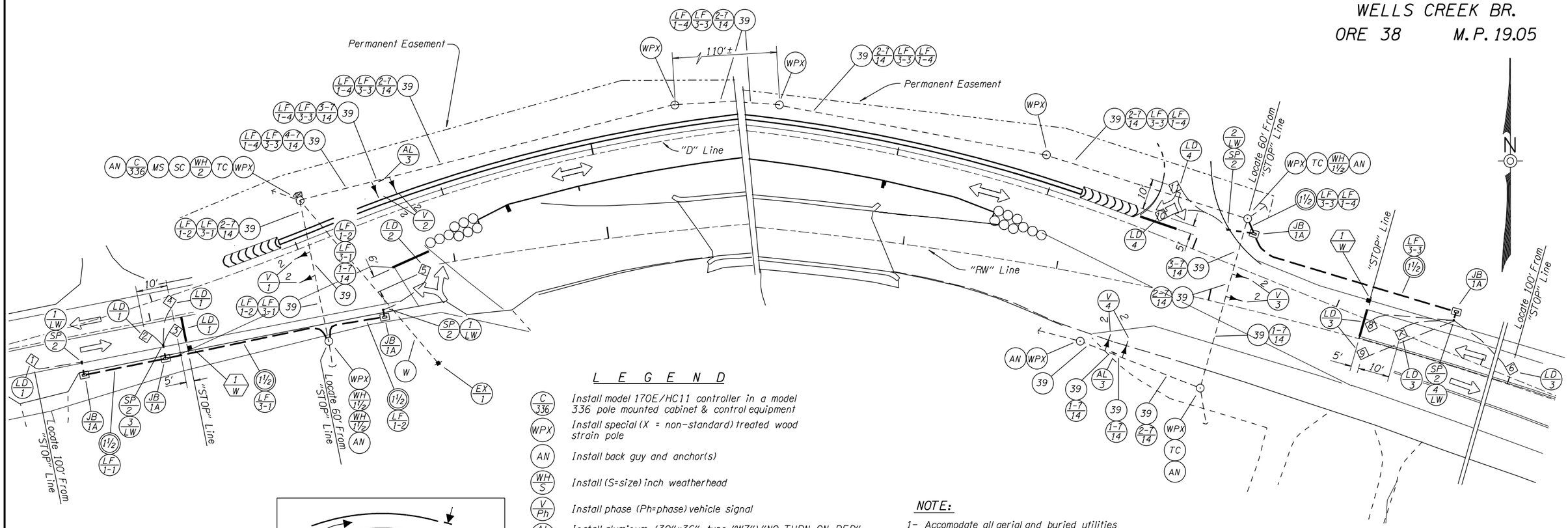

L E G E N D

- (C/336) Install model 170E/HC11 controller in a model 336 pole mounted cabinet & control equipment
- (WPX) Install special (X = non-standard) treated wood strain pole
- (AN) Install back guy and anchor(s)
- (WH/S) Install (S=size) inch weatherhead
- (V/Ph) Install phase (Ph=phase) vehicle signal
- (AL/3) Install aluminum (30"x36", type "W7") "NO TURN ON RED" sign
- (TC) Install terminal cabinet
- (SC) Install service cabinet, 120/240 volt, for signal system
- (MS) Install 120/240 volt meter base
- (JB/1A) Install 17"x10"x12" (min. dimension) precast concrete junction box with concrete apron
- (SP/S) Install 6" max. sand pocket block-out with (S=size) inch conduit to junction box
- (LD/Ph) Install phase (Ph=phase) 6' round or 4' diamond vehicle detector loop
- (LF/X-Ph) Install (X=number of cables) phase (Ph=phase) loop feeder cables
- (N/LW) Install (N=number) pair of loop wires
- (X-N/G) Install (X=number of cables) control cables with (N=number) AWG No. (G=AWG wire size) conductors
- (39) Install 3/8" galv. steel messenger cable
- (S) Install (S=size) inch electrical conduit
- (EX/1) Retain and protect existing power pole (Power source)
- (W) Install wire as required by power company
- (N/M) Install new sign (N=sign number) on new (M=material option) sign support

2 = 12" R, 12" Y, 12" G

NOTE:

1- Accomodate all aerial and buried utilities such that existing facilities are preserved

2- Minimum 8' spacing between signal heads.

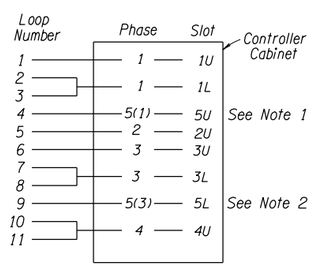

LOOP DETECTOR WIRING DIAGRAM

Note:

1.- 5U transfer to 1L if Ph.1 is Green
2.- 5L transfer to 3L if Ph.3 is Green

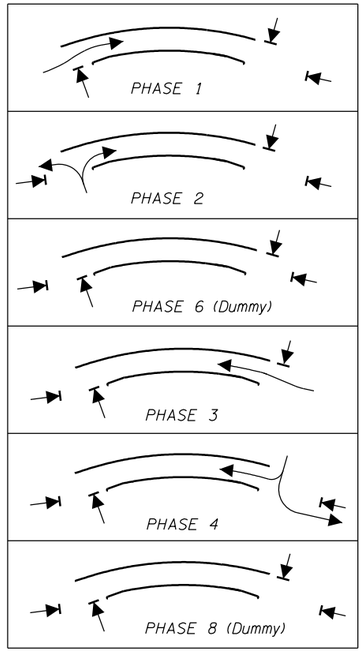

NORMAL PHASE ROTATION

SIGN LEGEND

N = Sign Number
M = Material

Material options are:
W = Wood

Sign No. 1
R10-6
"W1"

CONSULTANT LOGO AND INFORMATION

Traffic Engineering Operations Section Approval

REGISTERED PROFESSIONAL ENGINEER
XX,XXX
NOT FOR CONSTRUCTION
OREGON
JULY 11, 2000
XXXXX X. XXXXXX
Expires Dec. 31, 200X

OREGON DEPARTMENT OF TRANSPORTATION
TRAFFIC ENGINEERING OPERATIONS SECTION

WELLS CREEK BRIDGE SEC.
UMPQUA HIGHWAY
DOUGLAS COUNTY

DESIGNED BY: Arlo Bones
REVIEWED BY: Arlo Bones
DRAWN BY: Arlo Bones
FC: 45 MP: 19.05

ACCOMPANIED BY DWGS. TM452, TM455, TM458, TM460, TM462, TM463, TM465, TM470, TM472, TM475, TM480, TM485, TM488

TEMP SIGNAL PLAN

TSSU No. _____ T.R.S. DWG. NO. 17000

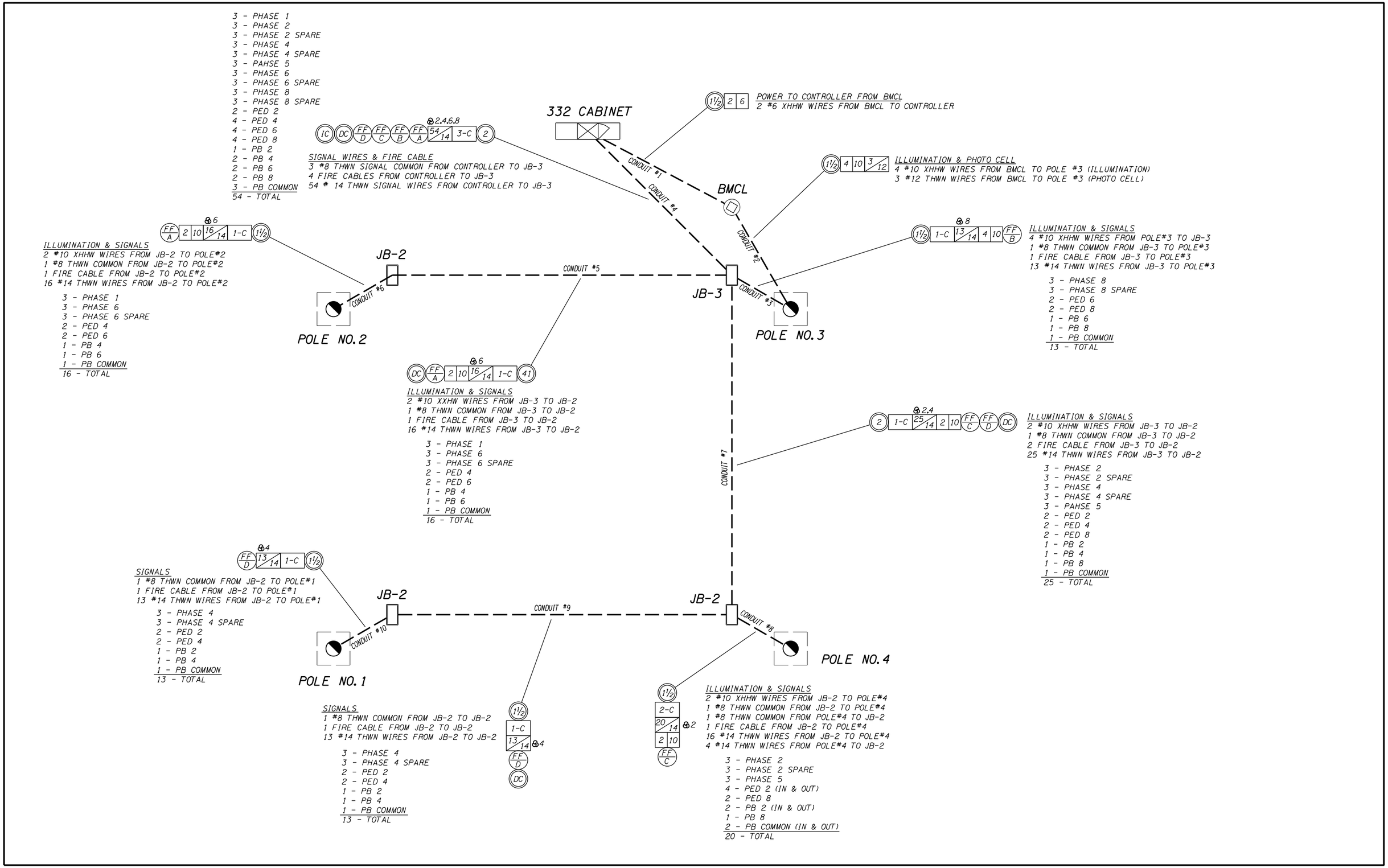
3 - PHASE 1
3 - PHASE 2
3 - PHASE 2 SPARE
3 - PHASE 4
3 - PHASE 4 SPARE
3 - PAHSE 5
3 - PHASE 6
3 - PHASE 6 SPARE
3 - PHASE 8
3 - PHASE 8 SPARE
2 - PED 2
4 - PED 4
4 - PED 6
4 - PED 8
1 - PB 2
2 - PB 4
2 - PB 6
2 - PB 8
3 - PB COMMON
54 - TOTAL
2.4.6.8
IC DC FF D FF C FF B FF A 54/14 3-C 2
SIGNAL WIRES & FIRE CABLE
3 #8 THWN SIGNAL COMMON FROM CONTROLLER TO JB-3
4 FIRE CABLES FROM CONTROLLER TO JB-3
54 # 14 THWN SIGNAL WIRES FROM CONTROLLER TO JB-3
332 CABINET
1½ 2 6
POWER TO CONTROLLER FROM BMCL
2 #6 XHHW WIRES FROM BMCL TO CONTROLLER
CONDUIT #1
CONDUIT #4
BMCL
1½ 4 10 3/12
ILLUMINATION & PHOTO CELL
4 #10 XHHW WIRES FROM BMCL TO POLE #3 (ILLUMINATION)
3 #12 THWN WIRES FROM BMCL TO POLE #3 (PHOTO CELL)
CONDUIT #2
6
FF A 2 10 16/14 1-C 1½
ILLUMINATION & SIGNALS
2 #10 XHHW WIRES FROM JB-2 TO POLE#2
1 #8 THWN COMMON FROM JB-2 TO POLE#2
1 FIRE CABLE FROM JB-2 TO POLE#2
16 #14 THWN WIRES FROM JB-2 TO POLE#2
3 - PHASE 1
3 - PHASE 6
3 - PHASE 6 SPARE
2 - PED 4
2 - PED 6
1 - PB 4
1 - PB 6
1 - PB COMMON
16 - TOTAL
JB-2
CONDUIT #5
CONDUIT #6
POLE NO. 2
JB-3
CONDUIT #3
POLE NO. 3
8
1½ 1-C 13/14 4 10 FF B
ILLUMINATION & SIGNALS
4 #10 XHHW WIRES FROM POLE#3 TO JB-3
1 #8 THWN COMMON FROM JB-3 TO POLE#3
1 FIRE CABLE FROM JB-3 TO POLE#3
13 #14 THWN WIRES FROM JB-3 TO POLE#3
3 - PHASE 8
3 - PHASE 8 SPARE
2 - PED 6
2 - PED 8
1 - PB 6
1 - PB 8
1 - PB COMMON
13 - TOTAL
6
DC FF A 2 10 16/14 1-C 41
ILLUMINATION & SIGNALS
2 #10 XXHW WIRES FROM JB-3 TO JB-2
1 #8 THWN COMMON FROM JB-3 TO JB-2
1 FIRE CABLE FROM JB-3 TO JB-2
16 #14 THWN WIRES FROM JB-3 TO JB-2
3 - PHASE 1
3 - PHASE 6
3 - PHASE 6 SPARE
2 - PED 4
2 - PED 6
1 - PB 4
1 - PB 6
1 - PB COMMON
16 - TOTAL
CONDUIT #7
2.4
2 1-C 25/14 2 10 FF C FF D DC
ILLUMINATION & SIGNALS
2 #10 XHHW WIRES FROM JB-3 TO JB-2
1 #8 THWN COMMON FROM JB-3 TO JB-2
2 FIRE CABLE FROM JB-3 TO JB-2
25 #14 THWN WIRES FROM JB-3 TO JB-2
3 - PHASE 2
3 - PHASE 2 SPARE
3 - PHASE 4
3 - PHASE 4 SPARE
3 - PAHSE 5
2 - PED 2
2 - PED 4
2 - PED 8
1 - PB 2
1 - PB 4
1 - PB 8
1 - PB COMMON
25 - TOTAL
4
FF D 13/14 1-C 1½
SIGNALS
1 #8 THWN COMMON FROM JB-2 TO POLE#1
1 FIRE CABLE FROM JB-2 TO POLE#1
13 #14 THWN WIRES FROM JB-2 TO POLE#1
3 - PHASE 4
3 - PHASE 4 SPARE
2 - PED 2
2 - PED 4
1 - PB 2
1 - PB 4
1 - PB COMMON
13 - TOTAL
JB-2
CONDUIT #9
JB-2
CONDUIT #10
POLE NO. 1
CONDUIT #8
POLE NO. 4
SIGNALS
1 #8 THWN COMMON FROM JB-2 TO JB-2
1 FIRE CABLE FROM JB-2 TO JB-2
13 #14 THWN WIRES FROM JB-2 TO JB-2
3 - PHASE 4
3 - PHASE 4 SPARE
2 - PED 2
2 - PED 4
1 - PB 2
1 - PB 4
1 - PB COMMON
13 - TOTAL
1½ 1-C 13/14 4 FF D DC
1½ 2-C 20/14 2 10 FF C 2
ILLUMINATION & SIGNALS
2 #10 XHHW WIRES FROM JB-2 TO POLE#4
1 #8 THWN COMMON FROM JB-2 TO POLE#4
1 #8 THWN COMMON FROM POLE#4 TO JB-2
1 FIRE CABLE FROM JB-2 TO POLE#4
16 #14 THWN WIRES FROM JB-2 TO POLE#4
4 #14 THWN WIRES FROM POLE#4 TO JB-2
3 - PHASE 2
3 - PHASE 2 SPARE
3 - PHASE 5
4 - PED 2 (IN & OUT)
2 - PED 8
2 - PB 2 (IN & OUT)
1 - PB 8
2 - PB COMMON (IN & OUT)
20 - TOTAL