ATTACHMENT O: EROSION CONTROL PLAN

Lindsey Creek to Starvation Creek
Historic Columbia River Highway State Trail

Erosion Control Measures:

The major water quality concerns during construction are erosion prevention and sediment control. For construction activities, DEQ is responsible for issuance and enforcement of their NPDES 1200-C permits.

Section 401 of the federal Clean Water Act requires DEQ Water Quality Certification that the project will not violate water quality standards. It is anticipated that stormwater discharges during trail construction will be covered under the Oregon Department of Transportation's Region 1 NPDES 1200-CA Permit.

The project will need an Oregon DEQ-compliant erosion and sediment control plan prior to the start of any construction. EPSC measures will include:

1. Preserve existing vegetation. Implement highly visible fencing and flagging of disturbance limits to preserve existing vegetation to the extent practicable. Preserved vegetation will act as a vegetative buffer to minimize stormwater velocity and control sediment transport
2. Temporarily stabilize disturbed and placed soils. Minimize active erosion with mulch stabilization on disturbed soils prior to final stabilization. Apply mulch in conjunction with proper surface roughening techniques, which will minimize stormwater velocity and prevent erosion.
3. Install silt fence on contour downgradient of land disturbing activities to capture sediment in stormwater runoff. Install straw wattles on disturbed slopes to minimize stormwater velocity and prevent erosion.
4. Insert inlet protection at stormwater collection features to minimize sediment discharge into stormwater conveyance systems.
5. Protect engineered water quality facilities during construction
6. Construct gravel construction entrances or wheel washes.
7. Establish vegetative cover of disturbed areas as permanent stabilization.

8. Require the contractor to maintain a spill control kit to be used in case of a material spill.

1. **Erosion Control Measures:**
A number of erosion control (EC) measures are proposed, both during construction and as permanent features:

1. Limited clearing to preserve as much native vegetation as possible and reduce erosion source areas through out the corridor alignment.

2. Sediment management will use sediment control devices that filter water and trap sediment such as compost blankets, flexible growth mediums, compost socks, wattles and coir logs. These systems will be installed at appropriate locations especially on the downhill side of the trail before, during and after earthwork activities are undertaken.

These sediment prevention and control measures will be installed and maintained in accordance with Western Federal Lands Highway Division (WFLHD) specifications. Construction perimeter fencing will be used to delineate limit of work throughout the project corridor.

WFLHD has developed innovative specifications for this approach to erosion control. The benefits of this innovative approach are described below:

- Improved protection from raindrop splash erosion.
- Reduced competition from weed species.
- Reduced stormwater runoff volume and velocity.
- Improved infiltration rate.
- Conserves soil moisture.
- Improved soil biology - activity by bacteria, mycorrhizal fungi, nematodes, protozoa, microarthropod, and earthworms.
- Improved soil nutrient levels and nutrient cycling.
- Improved potential for vigorous long term vegetation coverage.

The specifications for use of this innovative approach specific to this project are attached. Compost will be applied from the edge of disturbance to the paving edge. Compost socks, wattles or coirs will be used, as needed, in addition to the compost blankets on disturbed slopes.

For additional information see the CalTrans website
http://www.dot.ca.gov/hq/LandArch/ec/organics/compost_blanket.htm

3. Brush and woody debris cleared from the work zone will be recycled on-site and chipped and placed in on -site. This organic material will trap sediment, hold moisture, and slowly decay, feeding the soil. We anticipate that this chipped material will take anywhere from two to five years to fully decay.

4. Except for a few short sections, two foot wide gravel shoulders are proposed on both sides of the paved trail. Runoff will be intercepted by these gravel shoulders and spread horizontally and vertically, avoiding concentrating runoff. This allows more runoff to seep into the ground. Due to the free-draining nature of native granular soils within the project area and the use of native soil and imported granular fill within trail construction, very little surface water flow is anticipated within the project area.

5. The trail alignment and cross-slope is designed to minimize the need for drainage features that concentrate flows (e.g., uphill side ditches, culverts). For gabion-type retaining walls without architectural fascia, runoff will down the wall face, and the trail will have a two-percent cross-slope in direction with the natural slope to encourage "sheet flow" over the wall face and minimize "concentration of flows". Sheet flow, which spreads water over a surface, does not require constructed drainage features, avoids typical erosive problems caused by concentrated flows. Where retaining walls have architectural fascia, a drainage system will be designed to route runoff around or under the wall. The drainage design will seek to minimize the use of inlets or visible pipe discharges near the walls, to the extent practicable, while meeting public safety and structure safety design goals.

By keeping the construction zone as narrow as practical, most of the existing tree canopy, understory shrub, and ground cover will be preserved. This existing plant material will continue to intercept up to 35 percent of the rainfall, reducing the amount of water that actually strikes the trail surface. Keeping the construction zone narrow significantly reduces the amount of potential runoff. It is anticipated that the sections of trail in the talus slope area should be free draining and have minimum erosive potential. Through good, thoughtful design and construction

management, this project will implement the most current, sustainable, and efficient erosion and sediment control methods and materials possible.

Appendices:

WFLHD Standard Erosion Control Sheets

- Silt fence - standard drawing 157-1
- Straw bales – standard drawing 157-3
- Sediment Trap – standard drawing 157-4
- Temporary Diversion Channels – Standard Drawing 157-5
- Check Dam – Standard drawing 157-6
- Temporary Erosion Control, berms, slope drains, and lined waterways

STATE	PROJECT	SHEET NUMBER

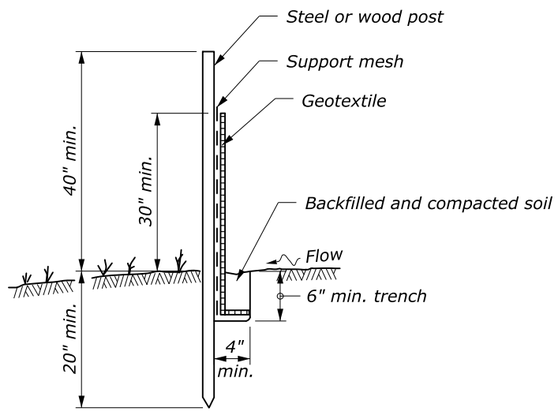

POST AND GEOTEXTILE INSTALLATION DETAIL

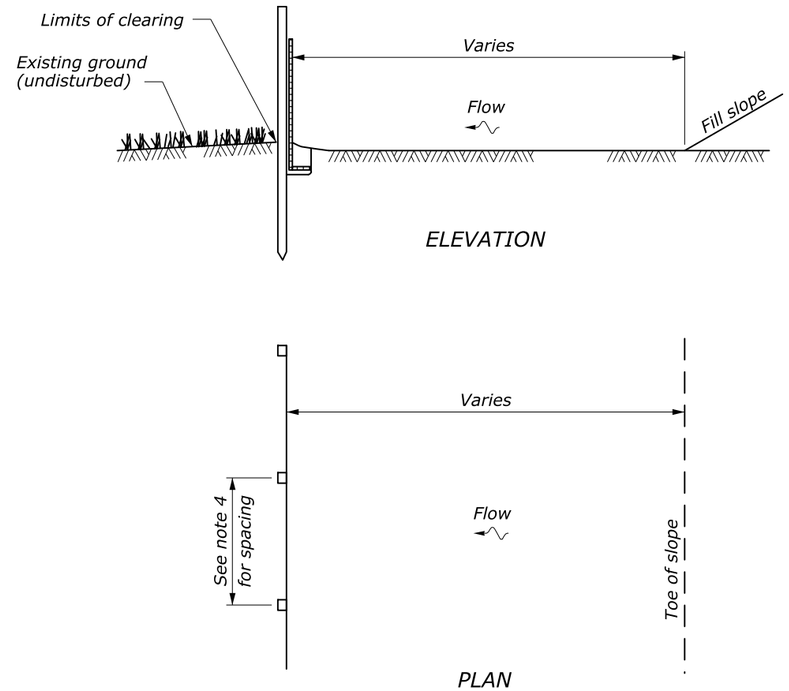

SILT FENCE INSTALLATION AT TOE OF FILL

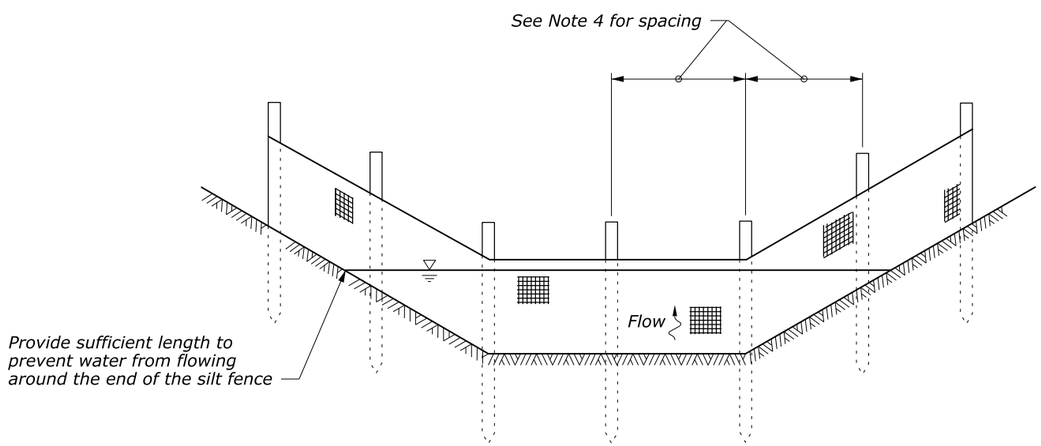

SILT FENCE INSTALLATION IN A DRAINAGE DITCH

See Note 1

NOTE:

1. Use drainage ditch installation for low flow conditions only when specified on Erosion Control Plan.
2. Alternate preassembled silt fence options will be allowed as long as specified dimensions are satisfied. Follow manufacturer's recommendations for installation procedures. All types must ensure silt fence remains attached to, and does not slide down, supporting posts.
3. Install silt fence along ground contours. Curve ends of silt fence upgrade to prevent water from running around the ends.
4. 10 ft. (max.) spacing with fence support.
   6 ft. (max.) spacing without fence support.

NO SCALE

U.S. DEPARTMENT OF TRANSPORTATION
FEDERAL HIGHWAY ADMINISTRATION
FEDERAL LANDS HIGHWAY

U.S. CUSTOMARY STANDARD

SILT FENCE

STANDARD APPROVED FOR USE 6/2005
REVISED: 6/2007
DRAFT: 3/2014

STANDARD 157-1

14 May 2014 10:01 AM c:\myfiles\pw_production\d0112490\Standard_157-1.dgn [USC]

STATE	PROJECT	SHEET NUMBER

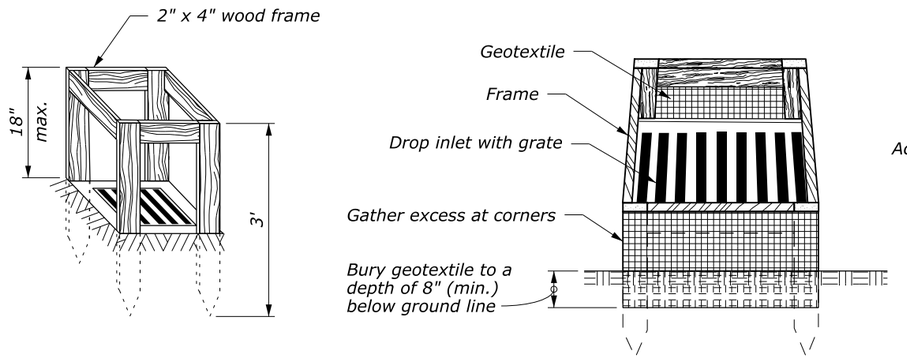

SILT FENCE DROP INLET PROTECTION (TYPE A)

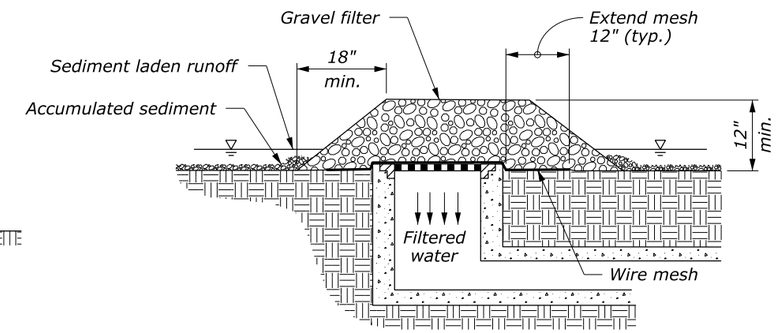

GRAVEL AND WIRE MESH DROP INLET PROTECTION (TYPE B)

NOTE:

1. For gravel filters use 2"- 3" diameter coarse aggregate.
2. Use wire mesh with ½" x ½" openings.
3. Use type A inlet protection in sump locations only.
4. Use type B inlet protection only in sump locations where heavy concentrated flows are not expected. Do not use where ponding around the structure might cause inconvenience or damage.

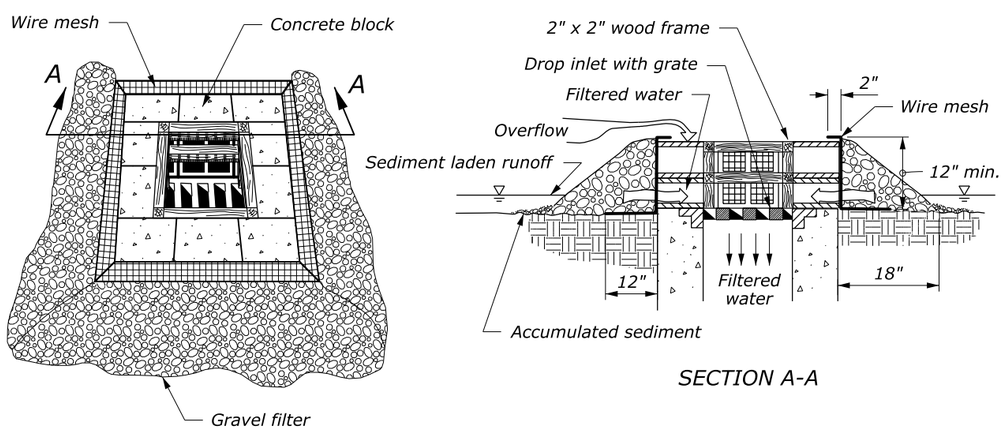

SECTION A-A

BLOCK AND GRAVEL DROP INLET PROTECTION (TYPE C)

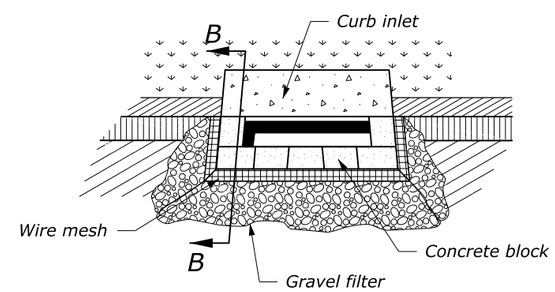

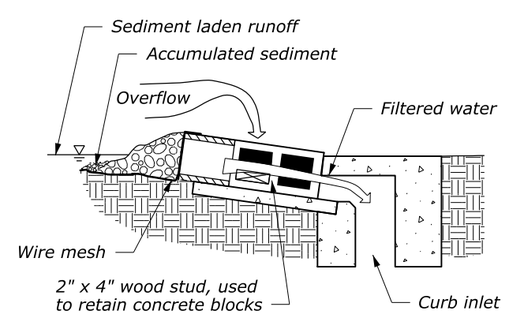

SECTION B-B

CURB INLET PROTECTION, BLOCK AND GRAVEL (TYPE D)

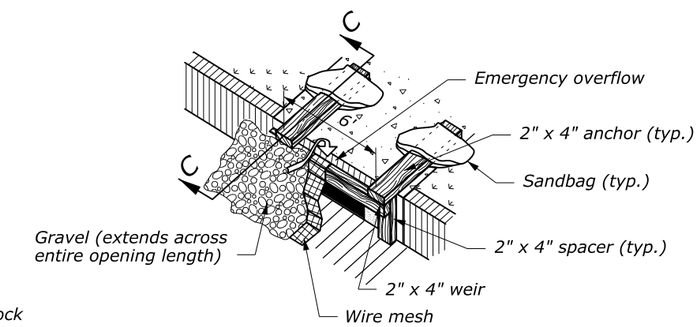

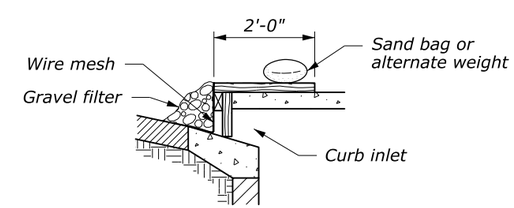

SECTION C-C

CURB INLET PROTECTION, WOODEN WEIR (TYPE E)

NO SCALE

U.S. DEPARTMENT OF TRANSPORTATION
FEDERAL HIGHWAY ADMINISTRATION
FEDERAL LANDS HIGHWAY

U.S. CUSTOMARY STANDARD

TEMPORARY INLET PROTECTION

STANDARD APPROVED FOR USE 6/2005

REVISED:
DRAFT: 3/2014

STANDARD 157-2

c:\myfiles\pw_production\d0112490\Standard_157-2.dgn [USC]
12 March 2014 2:40 PM

STATE	PROJECT	SHEET NUMBER

NOTE:

1. Use straw bales in drainage ditches only for low flow conditions and when specified on the Erosion Control Plans.

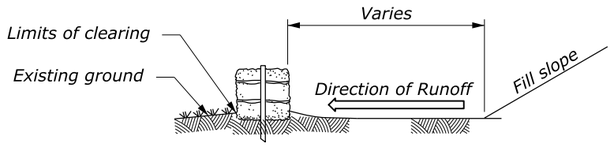

ELEVATION

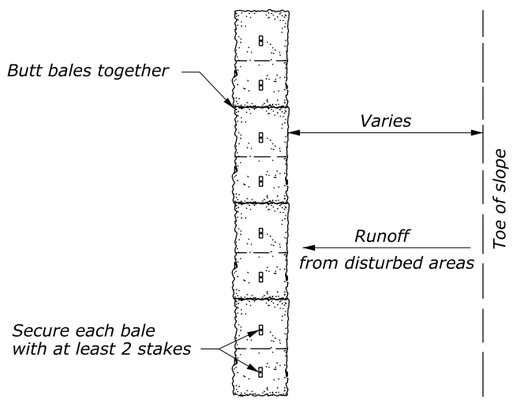

PLAN

INSTALLATION OF A STRAW BALE BARRIER AT TOE OF FILL

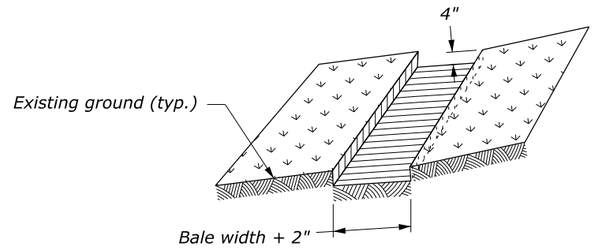

Step 1: Excavate trench

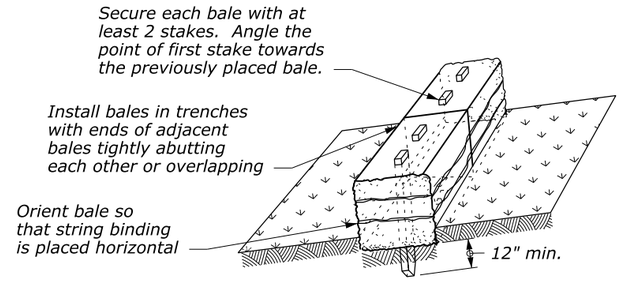

Step 2: Install bales

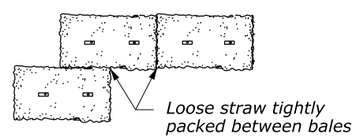

Step 3: Tightly pack straw between bales (plan view of bales)

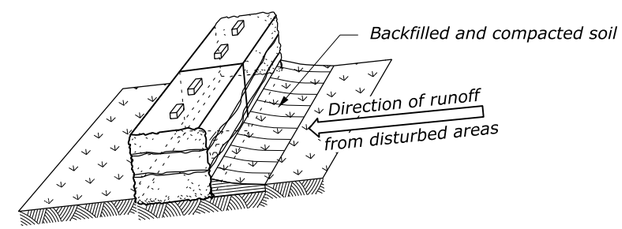

Step 4: Backfill soil against bales

PROPERLY STAKED AND ENTRENCHED STRAW BALES

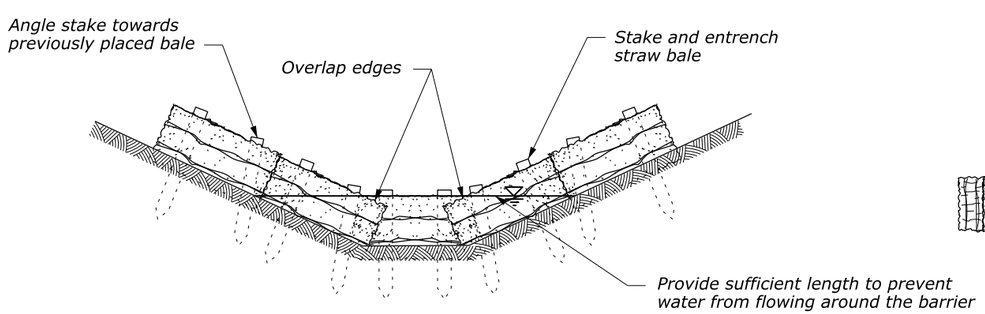

ELEVATION

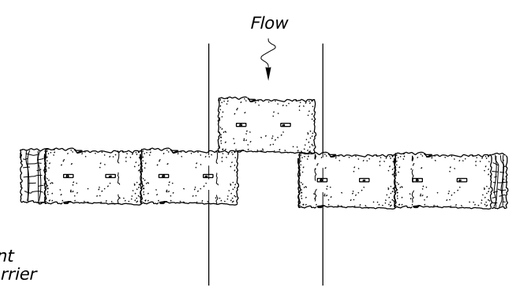

PLAN

INSTALLATION OF A STRAW BALE BARRIER IN DITCH
See Note 1

NO SCALE

U.S. DEPARTMENT OF TRANSPORTATION
FEDERAL HIGHWAY ADMINISTRATION
FEDERAL LANDS HIGHWAY

U.S. CUSTOMARY STANDARD

STRAW BALES

STANDARD APPROVED FOR USE 6/2005
REVISED: 6/2007

STANDARD
157-3

11 March 2014 4:26 PM c:\myfiles\pw_production\d0112490\Standard_157-3.dgn [USC]

STATE	PROJECT	SHEET NUMBER

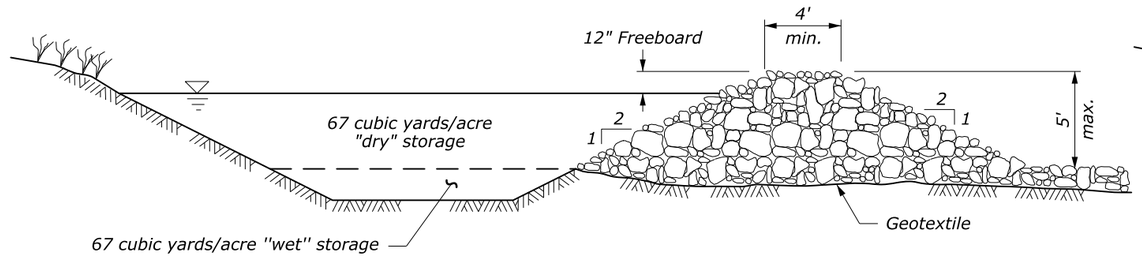

CROSS SECTION THROUGH SPILLWAY

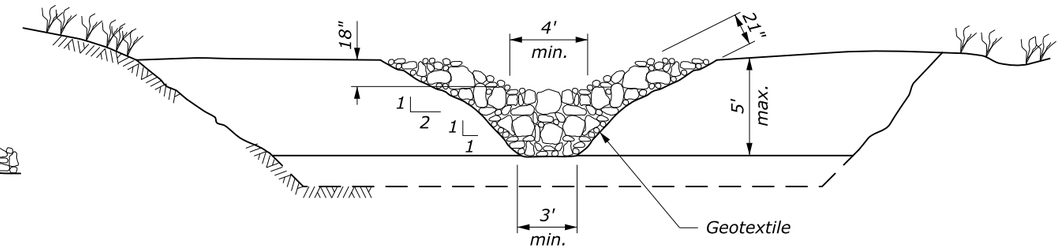

ELEVATION

SEDIMENT TRAP (TYPE A) RIPRAP OUTLET

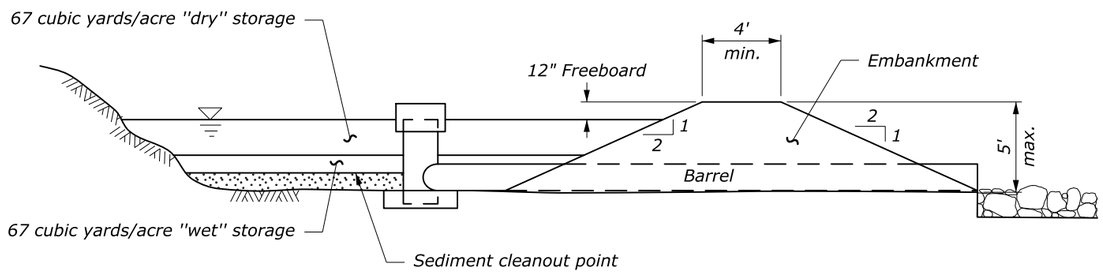

CROSS SECTION

NOTE:

1. Clear, grub, and remove all vegetative matter including root mat before constructing Sediment Trap.
2. Remove vegetative matter, other organic material, and large stones from embankment fill material.
3. Compact embankment in 8-inch layers using construction equipment for compaction of each layer.
4. Seed the soil embankment and all cut slopes with temporary or permanent vegetation within 7 days of construction.
5. Remove sediment from Sediment Trap when accumulated sediment reaches half the design water storage of the trap.
6. Inspect Sediment Trap regularly for damage and accumulated sediment and especially after each storm event. Make repairs as required.
7. Remove the Sediment Trap and stabilize the location by grading and seeding when the upslope drainage area has been stabilized against erosion.
8. Do not use sediment traps for drainage areas over 5 acres.

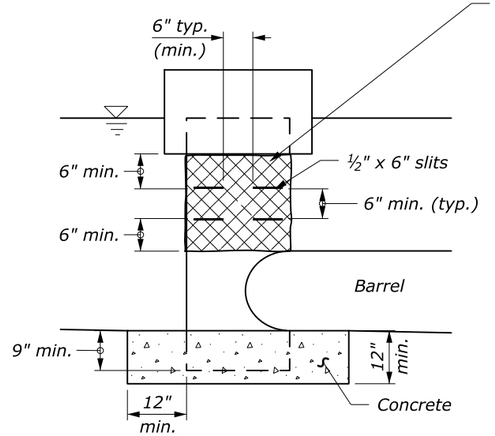

CONCRETE BASE
WITH SLIT PERFORATIONS IN RISER

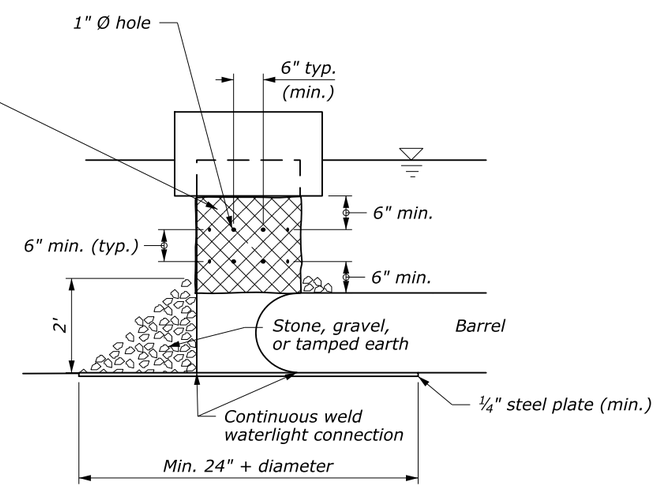

STEEL PLATE BASE
WITH HOLE PERFORATIONS IN RISER

SEDIMENT TRAP (TYPE B) PIPE OUTLET

NO SCALE

U.S. DEPARTMENT OF TRANSPORTATION
FEDERAL HIGHWAY ADMINISTRATION
FEDERAL LANDS HIGHWAY

U.S. CUSTOMARY STANDARD

SEDIMENT TRAP

STANDARD APPROVED FOR USE 6/2005

REVISED:

STANDARD
157-4

c:\myfiles\pw_production\d0112490\Standard_157-4.dgn [USC]
11 March 2014 4:19 PM

STATE	PROJECT	SHEET NUMBER

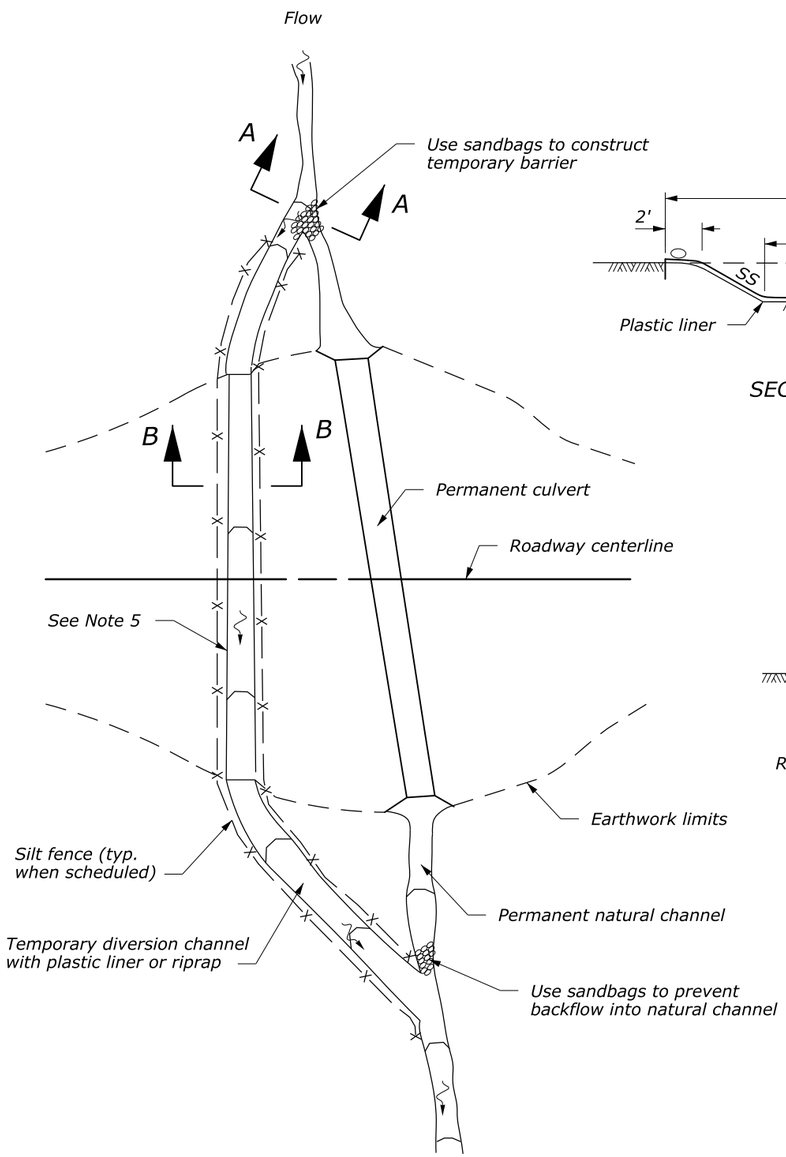

PLAN

DIVERSION CHANNEL

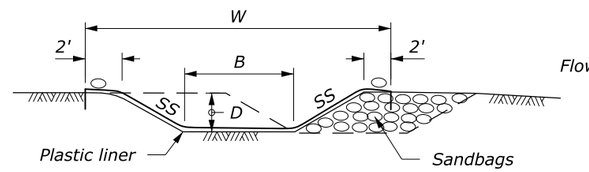

SECTION A-A

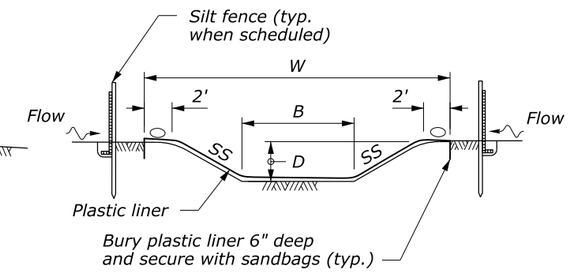

SECTION B-B

PLASTIC LINED DIVERSION CHANNEL

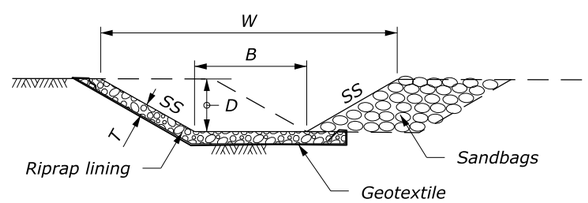

SECTION A-A

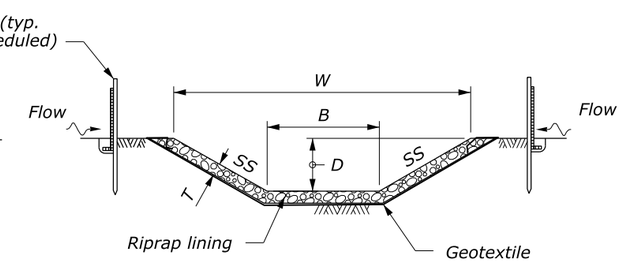

SECTION B-B

RIPRAP LINED DIVERSION CHANNEL

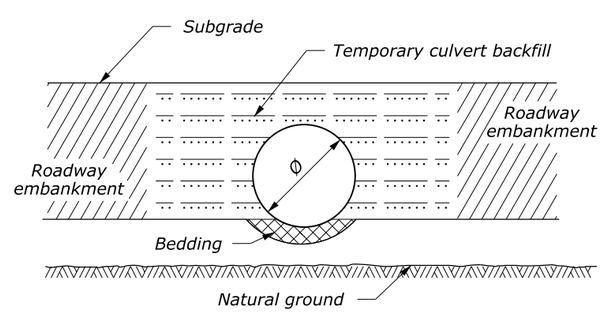

SECTION B-B

TEMPORARY CULVERT

NOTE:

1. See Erosion Control Section for temporary culvert diameter, riprap class, channel dimensions and quantities.
2. Use plastic liner or riprap along the entire length and width of the temporary diversion channel.
3. Construct channel at a minimum grade of 0.5 percent.
4. Do not construct with longitudinal joints if using a plastic liner. Bury the upstream edge of the liner a minimum of 6" deep and secure with riprap or sandbags.
5. When specified replace the portion of the diversion channel through the roadway embankment with temporary culvert. Compact temporary culvert backfill using one of the methods listed in Subsection 204.11(a).

NO SCALE

U.S. DEPARTMENT OF TRANSPORTATION
FEDERAL HIGHWAY ADMINISTRATION
FEDERAL LANDS HIGHWAY

U.S. CUSTOMARY STANDARD

TEMPORARY DIVERSION CHANNELS

STANDARD APPROVED FOR USE 6/2005

REVISED: 6/2007
DRAFT: 3/2014

STANDARD 157-5

c:\myfiles\pw_production\d0112490\Standard_157-5.dgn [USC]
11 March 2014 4:13 PM

STATE	PROJECT	SHEET NUMBER

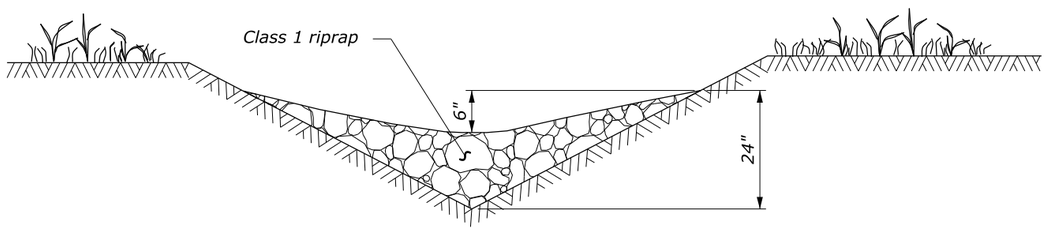

CROSS SECTION

V DITCH

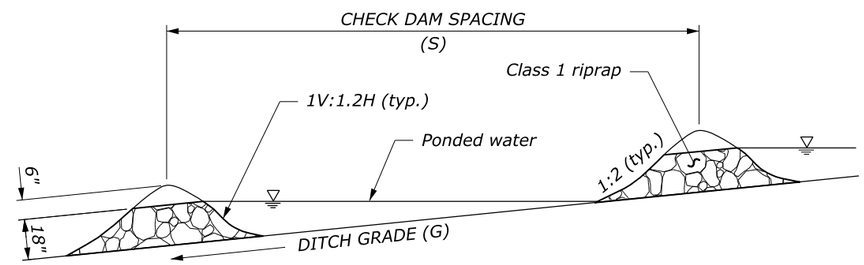

PROFILE VIEW

DITCH

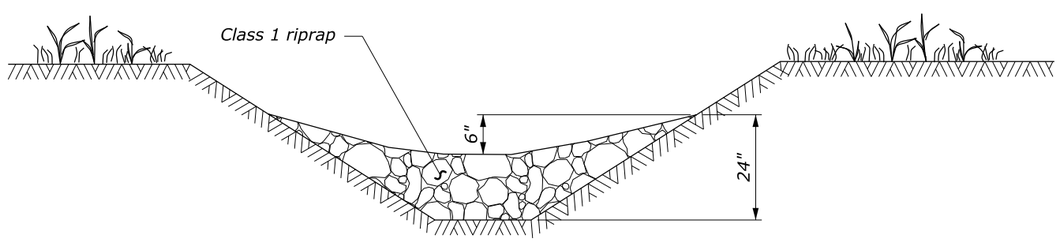

CROSS SECTION

TRAPEZOIDAL DITCH

* DITCH GRADE (G)	CHECK DAM SPACING S (ft)
2%	75
3%	50
4%	40
5%	30
6%	25

* Do not use Check Dams below 2% or above 6% ditch grades.

NO SCALE

U.S. DEPARTMENT OF TRANSPORTATION
FEDERAL HIGHWAY ADMINISTRATION
FEDERAL LANDS HIGHWAY

U.S. CUSTOMARY STANDARD

CHECK DAM

STANDARD APPROVED FOR USE 6/2005
REVISED: 6/2007

STANDARD
157-6

14 May 2014 9:53 AM c:\myfiles\pw_production\d0112490\Standard_157-6.dgn [USC]

STATE	PROJECT	SHEET NUMBER

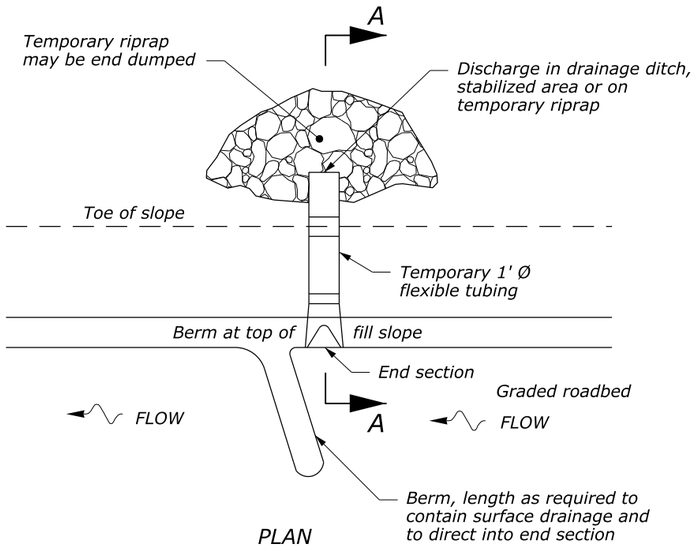

SLOPE DRAINS

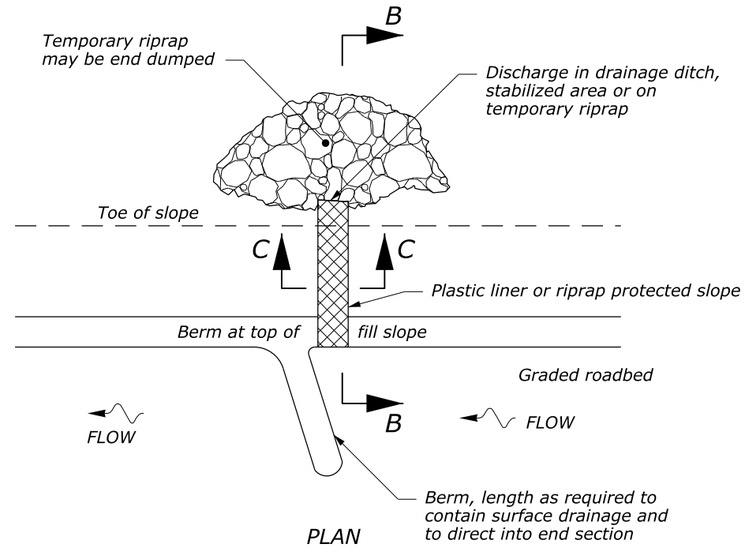

PLASTIC LINED WATERWAY

NOTE:

1. Use temporary slope drains (berms, drains, and riprap) as the embankment is constructed. Use spacings as shown on the Erosion Control Plans or as designated by the CO. Place all slope drains at the end of each work shift. Use slope drains until the slopes are permanently stabilized.
2. Construct temporary berms at the top of all erodible cut slopes as shown on the Erosion Control Plans or as designated by the CO. Use check dams to reduce the runoff velocity when existing grades are steep.
3. Do not use transverse or longitudinal joints in plastic liner. Plastic liner is not required for rock embankments.
4. Use toe-of-fill slope berms to divert offsite runoff away from disturbed areas.
5. Seed and mulch all cut slope berms and toe-of-fill berms immediately after berm construction.
6. Use Class 2 temporary riprap.

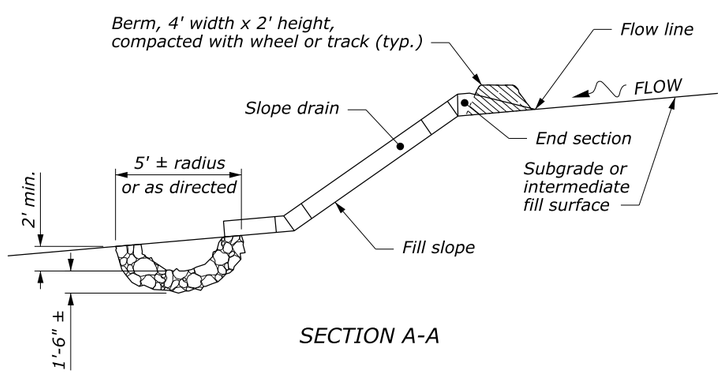

SECTION A-A

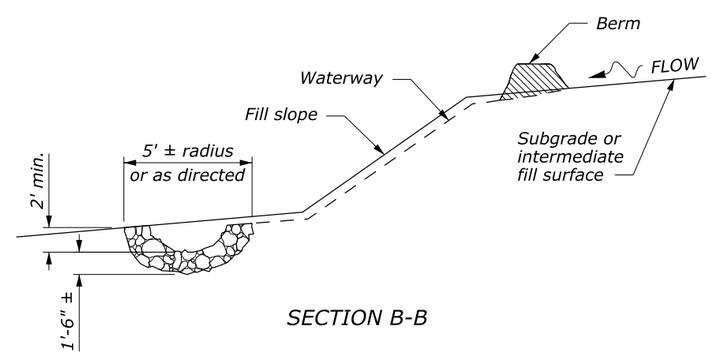

SECTION B-B

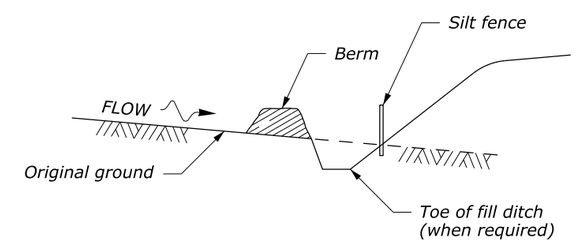

TOE-OF-FILL SLOPE BERM

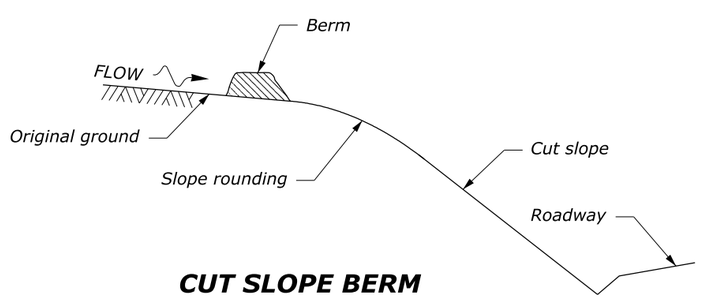

CUT SLOPE BERM

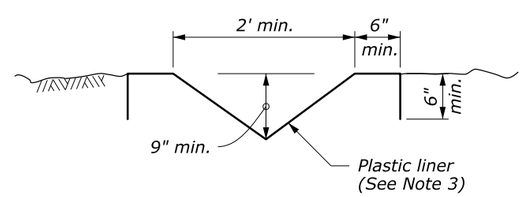

SECTION C-C

NO SCALE

U.S. DEPARTMENT OF TRANSPORTATION
FEDERAL HIGHWAY ADMINISTRATION
FEDERAL LANDS HIGHWAY

U.S. CUSTOMARY STANDARD

TEMPORARY EROSION CONTROL BERMS, SLOPE DRAINS, AND LINED WATERWAYS

STANDARD APPROVED FOR USE 6/2005

REVISED:

STANDARD 157-7

c:\myfiles\pw_production\d0112490\Standard_157-7.dgn [USC]
14 May 2014 9:50 AM