Chapter 5: Communications Plan

5.1 INTRODUCTION

This Chapter outlines a communication plan for the region that will support transportation requirements for data, and video transmission. The communication network will support communication required for ITS deployment between selected points in the region. It will provide a backbone communication system, as well as a distribution network to reach the individual devices or control locations. The basic purpose of the communication network is to provide the communication links between various end points on the network. These end points are distributed across the region and can include everything from a video camera to a central traffic signal system server.

5.1.1 Methodology for Developing the Deschutes County ITS Communications Plan

The methodology used to develop this communication plan is a "bottom-up" approach. The analysis begins with the current communication requirements and known additional requirements. These needs are combined with forecasted future growth and new technologies that should be supported in the future. This aspect of the planning is based on experience with similar systems and an understanding of the current trends in the industry. All of the communication requirements (current and potential) are then used as the basis for developing a communication model for the entire network. This model establishes the general configuration of the communication network and the basic protocols that will be supported. The final stage of the communication planning determines how the plan is applied to the actual deployment of the communication network. The communication plan should be considered a "living document" that is updated on a regular basis, as the communication needs change, to follow improvements in technology, and to reflect the implementation of various portions of the network.

5.1.2 Communications Plan Guidelines

There are a number of guiding principles that have been used in the development of this communication plan. These principles must also be considered during the detailed design:

- **Reliability:** The system must provide a high level of reliability, achieved through the use of components with a high mean time between failures (MTBF), combined with a redundancy in the network design.
- **Growth:** The network must be expected to grow gracefully. This requires the incorporation of a reasonable amount of unused capacity and a design approach that allows extra capacity to be provided by upgrading the transmission equipment.
- **Standards:** Communication protocols and component selection must use widely accepted standards that minimize ongoing operations and maintenance costs.

- **Flexibility:** The network configuration must be designed to maximize flexibility to accommodate future changes, rearrangements and equipment changes.
- **Decentralized:** As the network supports several agencies, it must be configured around several centers of control, and allow the control location to be changed according to current needs. This will support the concept of a virtual operations center.

5.1.3 Application of the Communication Plan

This chapter defines a "high-level" planning approach to ITS communication for the region. This plan provides the guidelines to be used in the development of the detailed design for each section of the communication network. As the opportunity arises to construct a section of the network (through funding or provision of facilities by a third party), the detailed design for that section will be completed.

The regional plan addresses the configuration and implementation approach, but it does not determine exact routing, equipment selection and capacities. These aspects of the communication network are best finalized during detailed design as a section of the network is to be implemented, allowing the most up to date requirements to be incorporated in sizing, and current transmission equipment to be selected. In municipal networks, cost effective facility routing and equipment locations can be selected if the implementation considers the plans for road reconstruction, and construction or renovation of buildings that can be used for communication equipment.

The following approach is recommended for each detailed design:

5.1.3.1 Pre-Design Planning Review

Before the start of the detailed design, typically at the same time as the documents are prepared to seek budget funding for the design, a brief "Pre-Design Planning Review" should be prepared. This document would typically be no more than two pages and would address the following topics:

- Key elements of the design that are required by the communication plan. These should include provisions for future growth and to provide for geographic areas outside that served by the particular detailed design.
- Aspects of the design that will not follow the communication plan, with justification for these changes.

The purpose of the pre-design planning review is to ensure that the concepts and principles of the communication plan are considered in the detailed design. For example, if a road is being reconstructed, and it is known to be on a planned backbone communication route, this approach will ensure that the detailed design (even if it is only a small section of the ultimate backbone) provides for the future needs. These provisions could accommodate the future capacity with the initial installation or provide conduit and equipment mounting space for future installation.

5.1.3.2 Final Planning Review

After the completion of the detailed design of the specific network segment, the pre-design planning review should be finalized to include any changes that have been made during the detailed design. The finalized review will document any provisions made in the detailed design to support the communication plan (for instance spare capacity, routing or configuration considerations). It will also justify deviations that have been made to the communication plan.

An important aspect of the final planning review will be to identify if there is a need to update the master communication plan, either in whole, or in part.

5.1.3.3 Communication Plan Updates

As sections of the network are implemented, and as technology and communication requirements change, the communication plan should be updated as required. At any given time the "current" communication plan will consist of the plan itself, and any Planning Reviews that have been conducted. A current list should be maintained with the communication plan, and updated as required.

5.2 EXISTING COMMUNICATION INFRASTRUCTURE

Chapter 1: Current & Future Transportation Conditions, includes a section on existing communication infrastructure. This section identified existing equipment and infrastructure that is owned and maintained by ODOT, City of Bend, City of Redmond and Deschutes County, as well as fiber optics infrastructure owned by Bend Cable. This existing infrastructure is illustrated in Figure 5-1 and summarized in this section.

In addition to the existing infrastructure, each agency was asked about their near-term plans and future vision for communications—independent of the new requirements defined in this regional ITS planning effort. The results of this discussion are included in this section as well.

5.2.1.1 ODOT

ODOT has a VHF radio network to communicate with maintenance staff and field personnel. ODOT owns one radio tower in the project area, located at the Region 2 offices in the north part of Bend off of Highway 97 (same location as the TOC). The tower currently supports equipment for ODOT radio communications and a spread spectrum (5.8 GHz) system to one camera on the Bend Parkway. ODOT has two other towers "in the ballpark". One is east of Bend, about 25 miles off of Highway 20 on Pine Mountain, the other is west of Prineville (approximately 15 miles east of Redmond) on Grizzly Mountain. Mt. Bachelor has a radio tower at the top of the mountain and ODOT and the State Police lease some space to support their radio communications in the vicinity.

DKS *Associates*
TRANSPORTATION SOLUTIONS

Oregon Department of Transportation

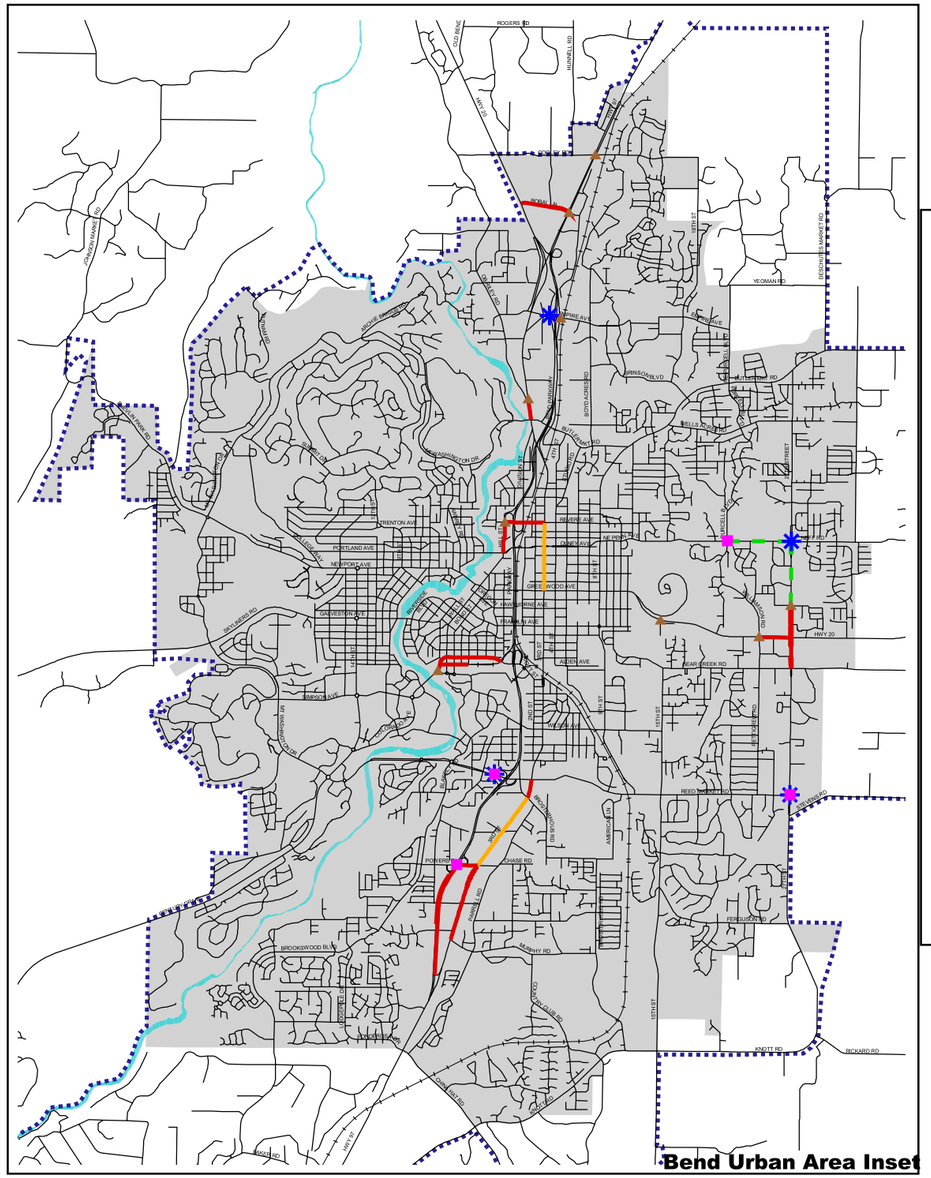

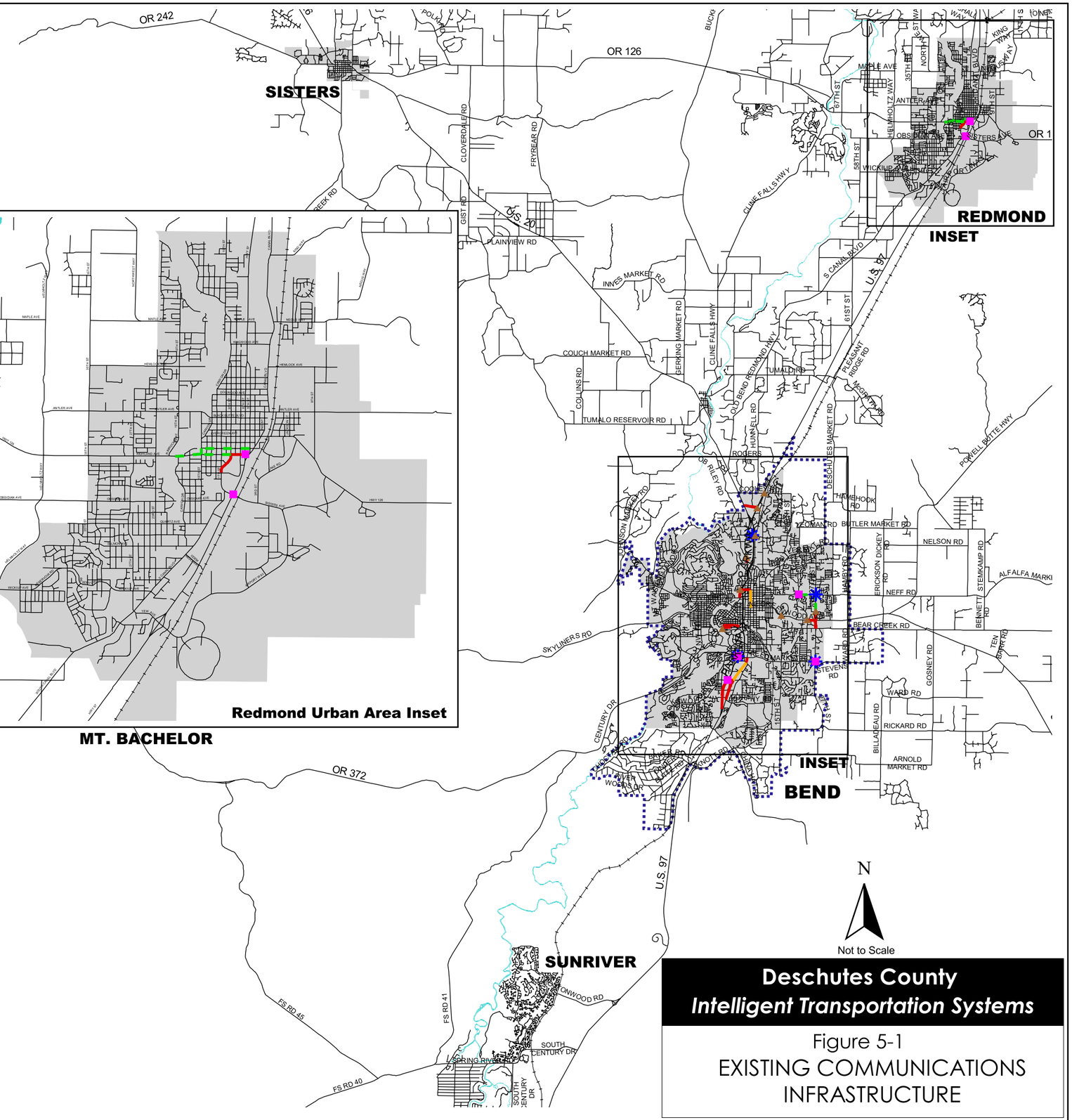

LEGEND

- Cell Phone Line Drop
- Land Line Drop

Twisted Pair Copper Interconnect

- Existing Conduit
- Existing Overhead
- Planned Conduit

- Signal with Conduit for Future Interconnect
- Bend MPO Boundary
- Urban Growth Boundary
- Railroads

Deschutes County
Intelligent Transportation Systems

Figure 5-1
EXISTING COMMUNICATIONS INFRASTRUCTURE

As discussed in previous chapters, ODOT operates and maintains all of the traffic signals in the region. ODOT currently has copper twisted-pair infrastructure between approximately 29 traffic signals (shown in Figure 5-1). Currently, the copper twisted-pair infrastructure is used for communications between traffic signals. ODOT accesses the signal communications via land or cellular phone drops. For ODOT's existing closed circuit television (CCTV) communications, dial-up is used for all but the pan/tilt/zoom (PTZ) camera on Bend Parkway, which uses a wireless connection.

It should be noted that neither ODOT nor any of the local agencies have built, or plan to build in the long term, any fiber optics infrastructure for transportation purposes. Conduit may possibly be included as part of the construction of the Redmond bypass north out of Bend.

5.2.1.2 Bend Cable

There is limited public agency installed fiber optic infrastructure in the Bend Metropolitan Area, but there is a significant center-to-center fiber optic network as a result of a franchise agreement with Bend Cable. Bend Cable's service area extends from the south end of Bend, along the Highway 97 corridor up to the Crooked River access road. The service area extends west to Sisters, and east to the Prong Horn housing development. Bend Cable services 52,000 homes with a 12 Megabit bandwidth connection to each. The existing 500-mile fiber optic network is configured in a hybrid fiber/coaxial cable (HFC) "star" configuration, with nodes diverging to coaxial cable. The Bend Cable facility is the network head end, located at Empire & Highway 97. The network is split aerial/underground. Bend Cable has access to utility poles through a Joint Use Agreement with the utility companies.

Bend Cable has fiber franchise agreements with Bend, Redmond, and Sisters. As part of the franchise agreement, the public agencies received dark fibers where Bend Cable installed infrastructure. The number of fibers varies by service area. The agencies are partly responsible for building out the connection from their facilities to the Bend Cable backbone. The current agreement will be renegotiated in 2012. Bend Cable also provides leased coaxial cable for lower-bandwidth clients, such as schools.

ODOT broadcasts local traffic camera images over one of Bend Cable's channels (Channel 48) for public information. The screen image is split to show three cameras and a scrolling information marquee.

5.2.1.3 City of Bend

The City of Bend is currently utilizing 10 of the allocated 18 drop locations as part of their lease agreement with Bend Cable. The existing drop locations include fire stations and public agency offices and a Gigabit Ethernet network has been established between these public agency facilities. The City may be open to using some of the remaining drops for ITS, but wants to reserve two for other purposes.

A promising new communications resource is the citywide wireless network currently in the planning phase. The goal is to provide 100 percent coverage of the city, although due to technological and geographical limitations, coverage will realistically be in the range of 80 – 90

percent. The purpose of the wireless network is to support emergency services by extending communications coverage for police, fire and city vehicles. Reliance on private cellular services is not a preferred option for emergency services, due to issues with network priority in a major emergency. Bend Public Safety will be providing the majority of the funding for the wireless network, which will use an 802.11(x) standard with open hardware. A site survey was recently completed to determine preliminary access points and estimated costs.

New towers with 4.9 GHz or 5.8 GHz point-to-multipoint will be built to provide redundancy for the wireless network, as the region's geography does not facilitate fiber redundancy. The network will initially be unlicensed, but will later move to a licensed 4.9 GHz private frequency for public safety.

5.2.1.4 City of Redmond

Redmond's lease agreement with Bend Cable is similar to the City of Bend's, and provides them with 18 cable drops. The leased fiber provides connectivity between City facilities for City and public agencies. Redmond also has a new agreement with Quantum Telecommunications. Redmond network connections include:

- Bend Public Schools → Redmond City Hall (Bend Cable fiber)
- Deschutes County → Redmond City Hall (Quantum 10 Megabit connection)
- Redmond City Hall → Fire Station
- Fire Station → Water Treatment Plan → Airport Way → Redmond Public Works

5.2.1.5 City of Sisters

City of Sisters is not included in the Ethernet network connecting Bend, Redmond and Deschutes County; however, there is fiber along US 20 to Sisters. Bend Cable is looking at putting a Point of Presence (POP) in front of the Sheriff's Office in Sisters.

5.2.1.6 Deschutes County

Redmond, Bend, and the Forest Service are all on the Deschutes County 800 MHz radio system. Bend and the County are sending data over this radio network. Deschutes County also provides communications support for the City of Redmond.

5.3 COMMUNICATIONS REQUIREMENTS

This section considers the end devices and centers to be supported on the network and the associated requirements for local communication facilities. All of these devices and centers, considered as a group, form the communication requirements for the region, which must be supported by the communication network. Figure 5-2 illustrates the existing and planned ITS devices (from agency interviews) as well as the proposed ITS devices that are identified in this regional ITS planning effort and discussed in more detail in Chapter 6.

DKS Associates
TRANSPORTATION SOLUTIONS

Oregon Department of Transportation

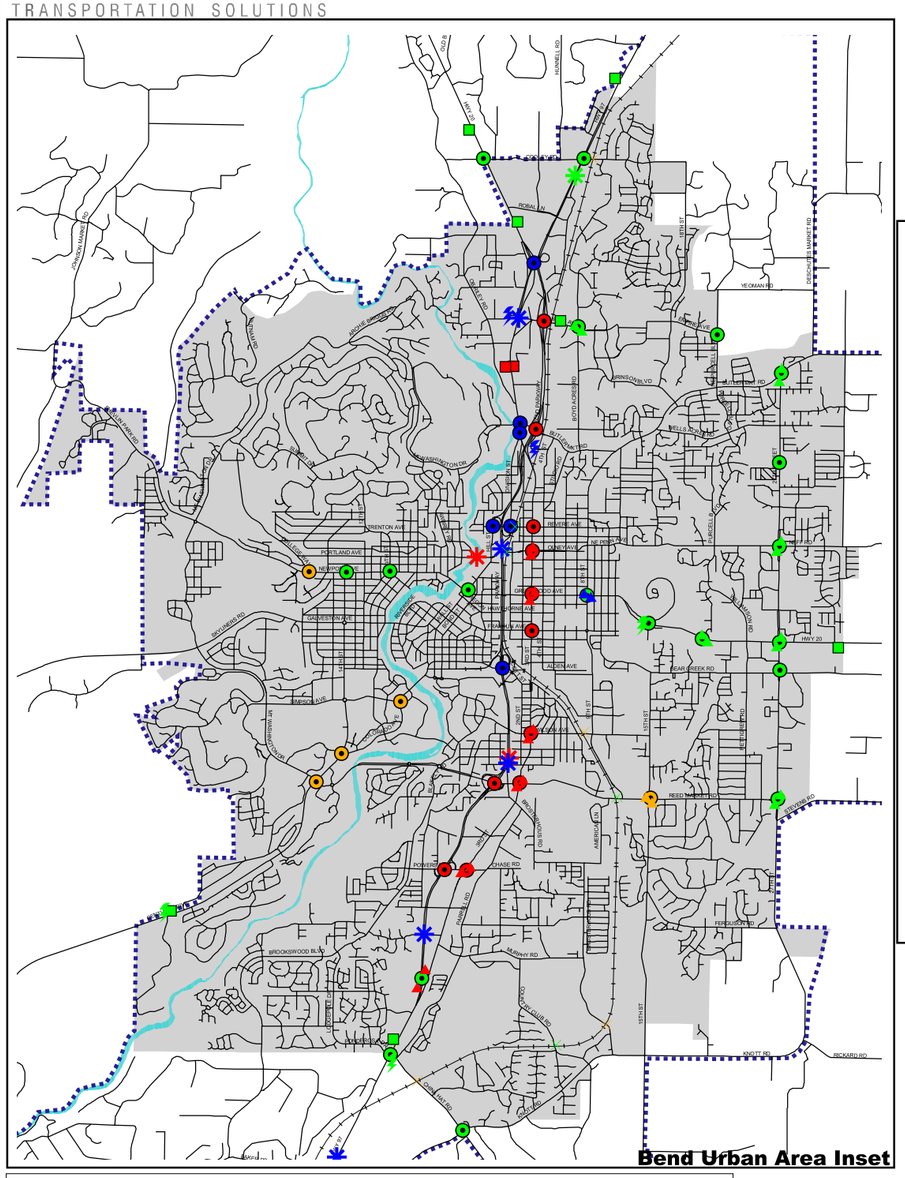

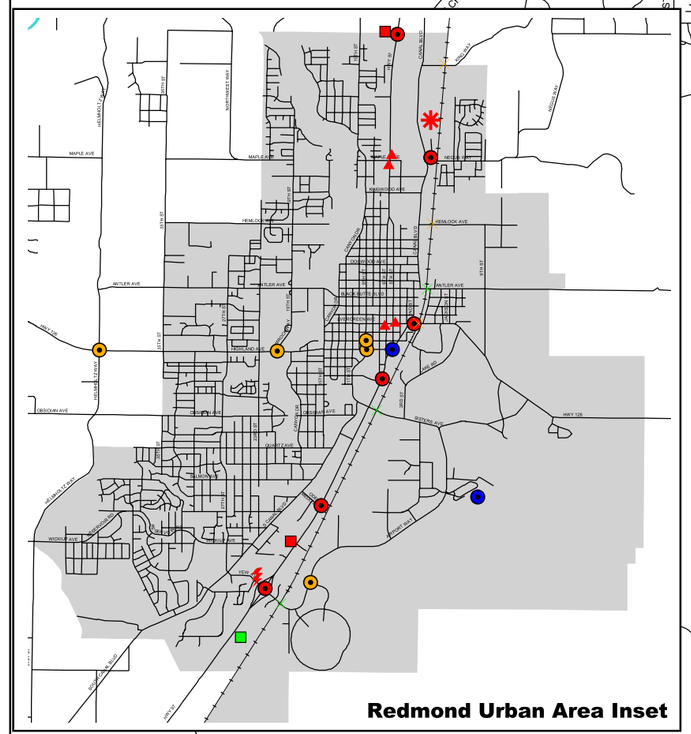

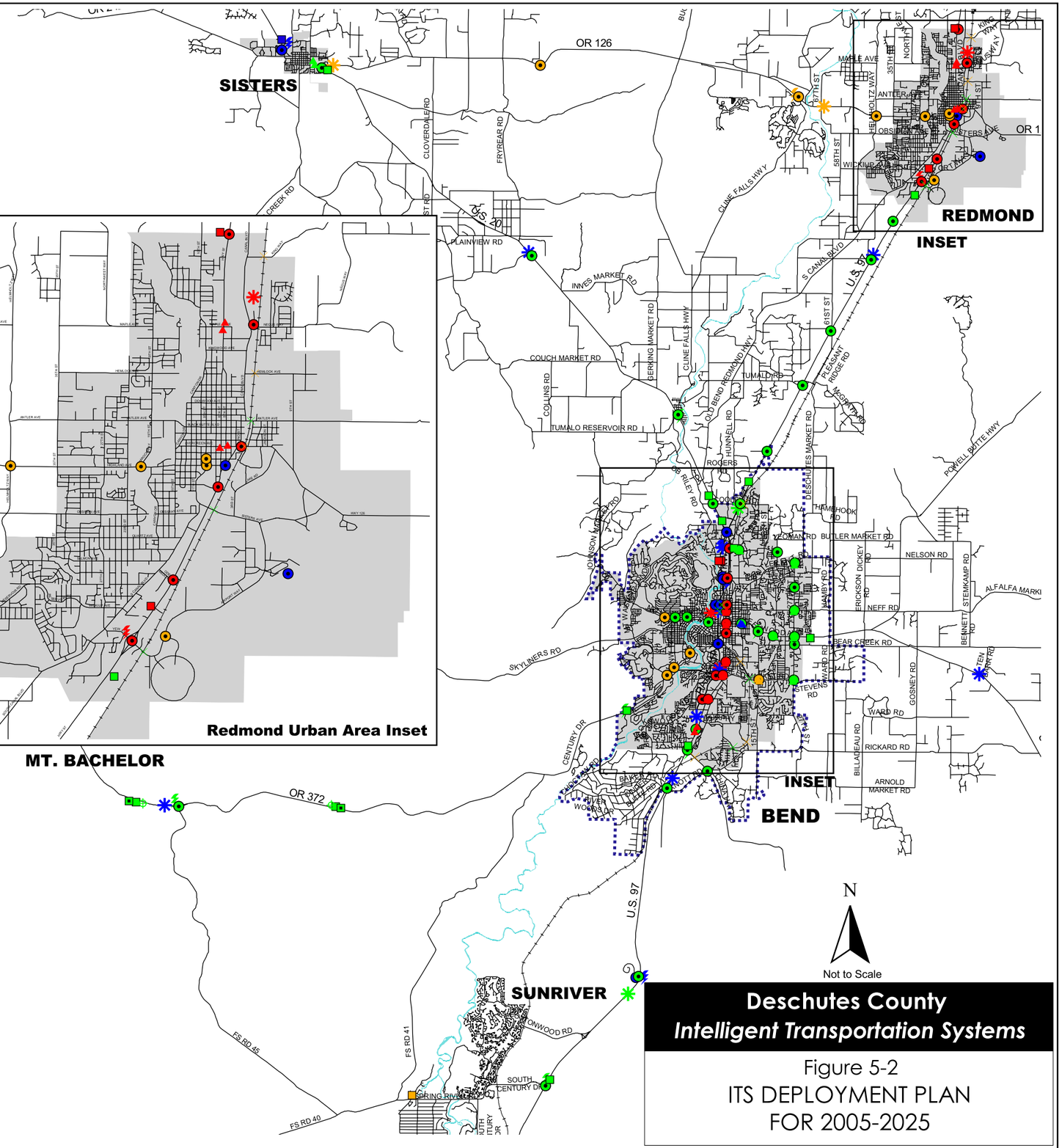

LEGEND

- Railroads
- Bend MPO Boundary

Device Phasing

- Existing
- Proposed 0-5 Years
- Proposed 6-10 Years
- Proposed 11-20 Years

ITS Equipment

- CCTV Camera
- Variable Message Sign
- Weather Station
- Automated Traffic Recorder
- Count Stations
- Advanced Rail Warning System
- Dynamic Speed Limit Sign
- Speed Photo Enforcement

Deschutes County
Intelligent Transportation Systems

Figure 5-2
ITS DEPLOYMENT PLAN
FOR 2005-2025

5.3.1 Requirements for Existing and Planned Devices

The network must be designed to support the various communication needs of the region; now, in the near future and for the long term. This section describes the current and near-term requirements for communication that the network must accommodate, including the existing and planned near-term devices (and independent of the results of this regional ITS planning effort). Section 5.3.2 will discuss the devices that are planned as part of this regional ITS planning effort.

The detailed design of any section of the network should support all current requirements, and provide for all anticipated requirements. Where the exact deployment of the anticipated equipment is not finalized, or in those cases where there is a significant incremental cost, the provision for these future requirements may be limited to the following:

- Installation of appropriate cable sizes, or the installation of underground conduit for future cable installation,
- Sizing of equipment enclosures, cabinets, and facility rooms to accommodate the future requirements,
- Sizing provisions for power to include the load for future equipment, and
- Choice of transmission systems that will allow modular expansion to support the anticipated future requirements.

5.3.1.1 Traffic Signals

Currently, all of the signals in the region are operated and maintained by ODOT, although signals are owned by Bend, Redmond and Deschutes County. Communication to traffic signals requires a data channel between the traffic signal system computer and the traffic signal controller for each intersection. The communication plan must support the existing systems and be capable of supporting migration to National Transportation Communications for ITS protocol (NTCIP) compliant communication in the future.

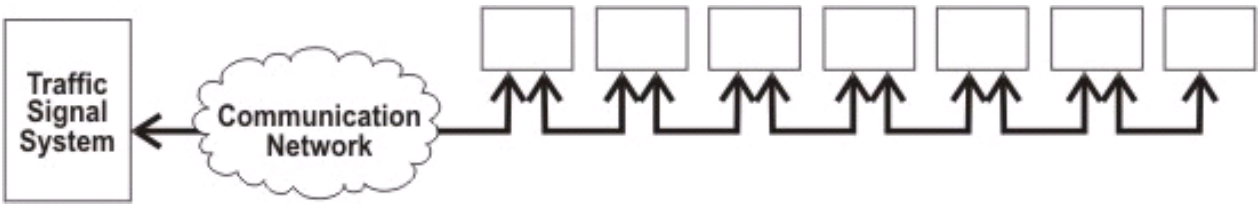

Figure 5-3. Traffic Signal Communication

<u>Current Requirements</u>
Currently, none of the traffic signals are connected back to a central software system.

Figure 5-3 illustrates a typical "present day" centralized traffic signal system communication approach, whereby an individual twisted pair is required to support groups of up to seven

controllers, with modems used to provide the communication link. Communication uses EIA/TIA-232 communication, commonly referred to by its original name, RS-232. This link is used to upload and download signal timing parameters, and allows monitoring of current status.

Anticipated Requirements

It is expected that eventually all signals will migrate to NTCIP communications at some point in the future. NTCIP protocols will allow RS-232 or Ethernet communication to each controller, but at this time all the development for Type 170 controllers is focused on RS-232 protocols for signal controllers. The data loading is dependant on the manufacturer's implementation of the protocol, but as shown in Figure 5-3, a maximum of seven controllers on a shared EIA/TIA 232 channel operating at 9600 bps is a good basis for network design. Note that NTCIP has a significant amount of overhead data that needs to be transmitted (as compared to proprietary systems/communications which use less data and for which 9600 baud is more than sufficient). This limits the number of controllers that can share a channel.

Communication Provisions

The communication protocols used by traffic signal controllers can be supported by fiber optics, twisted pair or a combination of the two. The communication design should provide for two fibers for each controller. Groups of up to six controllers (five current and one spare) may share the same two fibers, connected in series. The change from seven controllers per channel to five plus one spare will support additional overhead required for NTCIP. It is not necessary to reorganize existing groups of controllers until NTCIP is implemented, but any new transmission hardware or cables should be sized to accommodate this change.

When cable is placed in the vicinity of the signal controller, it should support the communication to that device. Signals that are not on a current fiber path can be connected to this path using existing twisted pair cable as required, but fibers should be reserved in the main cables to accommodate those additional signals in the future.

Detailed design should anticipate additional intersections that may be installed. Where additional signals are likely, the number of intersections sharing a common channel should be reduced to allow for future intersections.

5.3.1.2 Automatic Traffic Recorders

Automatic traffic recorders (ATR) are used to collect traffic volume, speed and occupancy data at a given location. The location of the recorders may be at signalized intersections using the traffic signal controller or at stand alone vehicle detection sites. For planning purposes, the communication requirements are identical with those of a traffic signal controller.

Current Requirements

The majority of vehicle detection occurs at signalized intersections and is handled by the signal controller. There are also several existing video detection sites in Bend.

ODOT operates three ATR stations in the project area in addition to collecting vehicle count information from detectors at signalized intersections. The City of Bend has installed traffic recorders for counting on Portland Avenue over the Deschutes River. ODOT's ATR stations consist of inductive loops that are directly connected to a 170 controller housed in a cabinet. The City of Bend is using video detection for the automated counts on bridges over the Deschutes River.

Anticipated Requirements

Future requirements will arise from new signalized intersections, and isolated detection sights along major roadways. Video detection can be used locations where permanent loop installations are not recommended (e.g. in areas where future road work is anticipated), but it is not necessary to bring video feeds from video detection sites back to the TOC – only the detection data is required. The City of Bend is planning video detection to collect automated counts on the bridges over the Deschutes River. If the selected video detection system provides a suitable image for monitoring traffic, the video signal may be supported in the same manner as a CCTV camera.

Communication Provisions

The data requirements of automatic traffic recorders can be supported with copper twisted pair, fiber optic cable or a dial-up phone line. Often these devices communicate directly with a traffic signal controller, and the fiber strands or copper pairs provisioned for a traffic signal controller will also support the automatic traffic recorders. In the case of a stand-alone automatic traffic recorder, the data could be connected to the Ethernet network if it is near a communications hub. For remote ATR's, leased dial-up phone lines are adequate. Similarly, if the video from a video detection site is to be available for viewing, provisions should be made to provide a CCTV channel as described in the next section.

5.3.1.3 CCTV Video

CCTV monitoring requires transmission of a video signal, as well as a data channel for camera control. In most systems the camera control, used to provide pan/tilt/zoom (PTZ) and focus, is carried on an RS-232 or EIA/TIA 485 (commonly called RS-485) data channel, which can be digitized in an internet protocol (IP) video stream or carried as a separate low speed data channel.

Current Requirements

Today, video signals from the existing cameras are transmitted to the ODOT TOC via a combination of wireless technology and leased lines. ODOT uses a video switch at the TOC to select the analog camera images to monitors located in the center.

Anticipated Requirements

A number of new CCTV camera locations have been identified for the future, and it is envisioned that cameras will be shared between agencies within the region. The video signals interfaced at a typical control center are shown in Figure 5-4. This could be the ODOT TOC, Bend Public Works office, or other center.

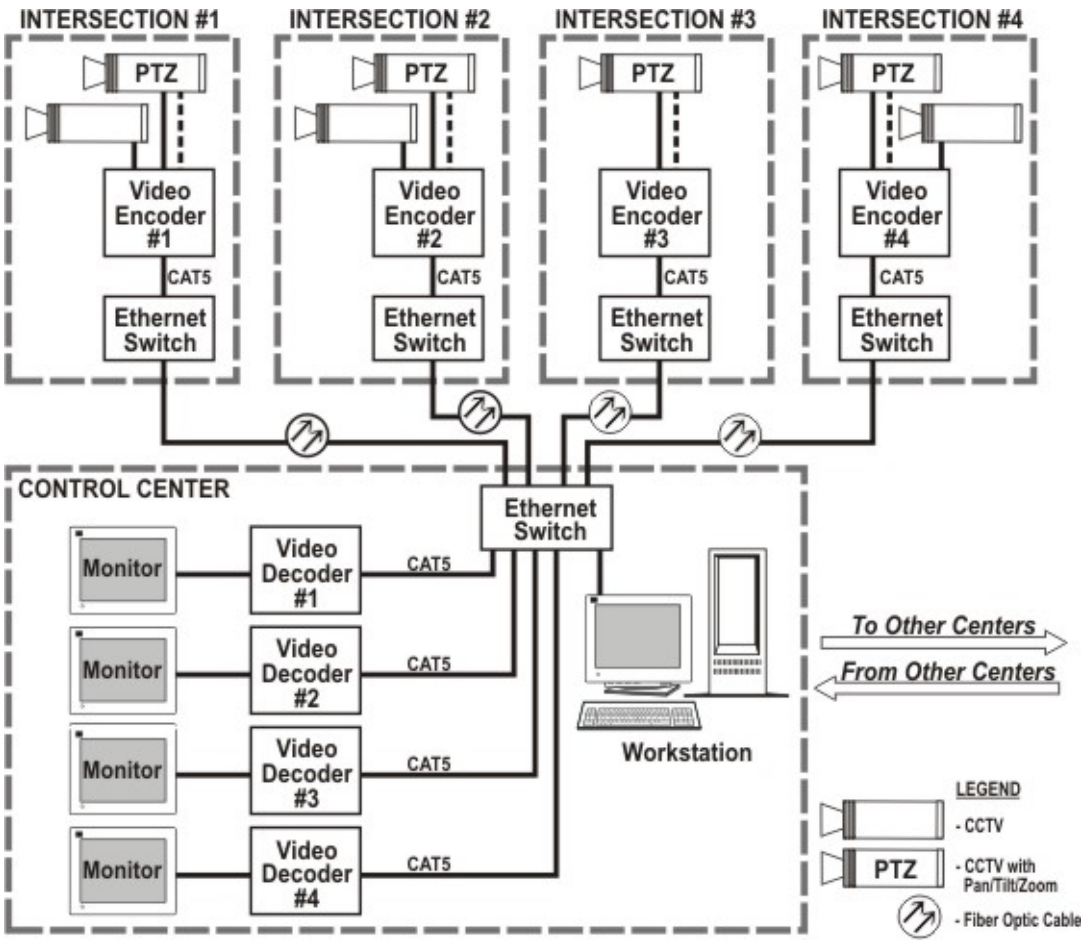

Figure 5-4. CCTV Video

Communication Provisions

CCTV video can be carried as an analog or digitized signal. The camera control channel can be transmitted as either serial data or be included in the TCP/IP data stream with the digital video. There are several methods available to transmit video, but digital IP video is recommended because it provides the most flexible network design for sharing video with other agencies and the Internet. Section 5.5.3 describes the recommendation further. Two fibers will be provided at every camera site to provide an Ethernet link that would support the video and camera control requirements.

5.3.1.4 Center-to-Center

A key element of a regional ITS operation is the use of center-to-center links to support the sharing of video and data, and in some cases allow for the control of a complete control center from a backup location. The following centers in the Deschutes County metropolitan area should be interconnected: transportation management centers, transportation maintenance centers, emergency operations centers (EOC's), and 911 centers.

Current Requirements
There are currently very limited requirements for communications between centers.

Potential Requirements
Additional locations that should be considered as centers and served with appropriate communication links are identified in Table 5-1.

Table 5-1. Center to Center Links

From	To	Purpose	Type of Link
Bend Public Works	ODOT TOC	Allow shared monitoring of cameras a signals.	Ethernet or RS232
Deschutes County Emergency Operati Center (EOC)	Bend Public Works ODOT TOC.	To allow monitoring and possibly cont activities in the region under emerger conditions. Links could include data a video	Should adhere to TCPIP Cente Center specifications.
Deschutes County 9 Center	Emergency Operati Center (EOC)	To allow sharing of information durin emergency situations.	Data on Ethernet channels. Co also consider voice communicat an emergency backup link.
Deschutes County 9 Center	Bend, Redmond and ODOT Traffic Management	Viewing of video images	RS 250B video channels

Communication Provisions
During detailed design, fibers should be included in the main fiber runs to accommodate six fibers for each center to center link.

5.3.1.5 Dynamic Message Signs (DMS)

A dynamic message sign (DMS) is an electronic sign used to post messages that are variable (any message) or changeable (one of several fixed messages). Traffic management personnel typically use DMS to apprise motorists of changes in the local road conditions.

Current Requirements
Currently ODOT operates and maintains one DMS in the Deschutes County metropolitan area along Highway 20 at the west end of Sisters. ODOT currently communicates with these signs using Point to Multi-Point Protocol (PMPP)/Point to Point Protocol (PPP) through 56K leased dial-up phone lines.

Potential Requirements
ODOT plans to install additional DMS signs as part of this deployment plan (Chapter 6). ODOT's new DMS installations are all NTCIP compliant and user configurable for 56K dial-up and UDP/IP over Ethernet. Communication requirements are similar to the traffic signal controllers, and several signs may share a single serial data communication channel depending on device location.

Communications Provisions

The data requirements of a typical DMS can be supported with either copper twisted pair or fiber optic cable. Only one fiber is required for communications to a DMS, although we recommend providing two fibers (one to support the DMS unit and the other for redundancy). For this reason it is recommended that two fibers or a twisted pair be included in all distribution or backbone cable installations for future DMS signs.

5.3.1.6 Other Traffic Subsystems

Other low data devices, such as road weather information systems, traffic beacons and highway advisory radio systems have similar communications requirements to the DMS devices.

5.3.1.7 Transit Subsystems

A number of systems are available for "next bus arrival," providing time and/or routing information to transit riders for the next bus to arrive. Many of these systems operate using wireless technologies, but they could also use the wireline communication network if it is available. It is also possible that at strategic points in the region, there will be communication links to the transit vehicles. Although the final link to the vehicle would use wireless technology, the communication backbone would support the link between a wireless antenna site and the control center.

Communication Provisions

Although any fixed route transit system communications requirements are not anticipated in the near future, they should be considered in long term planning, particularly for any new fiber optic construction.

Two fibers or one twisted pair should be allocated in distribution facilities for future transit links – either to roadside information signs or for communication to vehicles.

5.4 NETWORK ARCHITECTURE

In order to select a network architecture that is best suited to the needs of the region, it is important to consider the available options. This section describes the possible configurations and communication protocols at a higher level, including brief consideration of the strengths and weaknesses of each option.

A typical communication network is divided into three basic elements as shown in Figure 5-5:

a) **Backbone**: The communication backbone is capable of carrying all types of the data traffic in the system. The backbone interconnects a number of nodes, which are central locations where the information can be inserted onto or removed from the backbone.

b) **Distribution**: The distribution portion of the network provides a connection between the backbone node and a group of ITS devices or buildings. The distribution typically consists of a fiber optic cable running down the municipal

road allowance from the node location, but it may also be an existing twisted pair cable or wireless link. Distribution electronics are commonly collocated with the backbone node equipment in a communications hub.[1]

c) **Local**: The local portion of the network or "drop" that connects an end device or building to a distribution cable or directly to a node on a backbone.

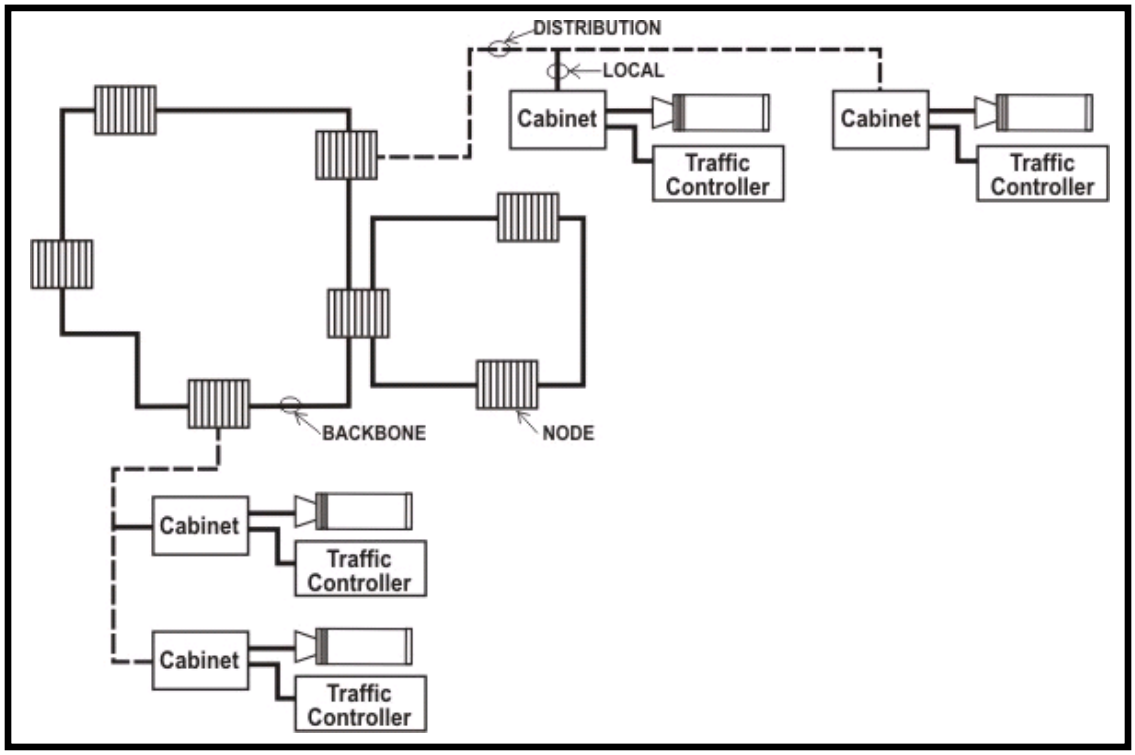

Figure 5-5. Communication Network Elements

The network must be designed to support data and video requirements to a wide variety of locations through the region. With particular types of communication equipment the video can also be converted to a data stream and carried on a common transmission medium, but for planning purposes it is typically more flexible to consider two independent networks:

a) **Data:** The communication network to carry the data signals will consist of a high-speed backbone and local distribution that will feed the individual signals to the backbone.

b) **Video**: The video network will carry single video channels and multi-channel video signals, generally to a control center. Single channel video will typically be carried in the distribution network, and video on the backbone usually combines a number of video signals into one multi-channel video signal.

[1] For the purposes of this document, the terms node and hub can be considered interchangeable.

There are a number of aspects of any network architecture that need to be considered:

a) **Communications Technology Options – Plant Level:** At the Outside Plant level, the network architecture considers the links between elements in the network. There are a number of technologies that can be used to connect locations on the network, either cables or wireless links.

b) **Physical Topologies:** The devices, centers and other facilities on a communication network can be connected in a number of different physical configurations or topologies, including star, ring, and/or mesh networks.

c) **Backbone Communications Technology Options – Sub-network Level:** A key aspect of the network architecture is the type of transmission system used in the backbone to interconnect network nodes. Examples include ATM, SONET and Ethernet technologies. In newly constructed networks generally a single backbone transmission system is selected for the entire network.

d) **Distribution Communications Technology Options – Sub-network Level:** There are a number of communication technologies that should be supported by the architecture for distribution systems such as Ethernet, RS-232/485, or propriety. Although it reduces complexity to minimize the number of distribution technologies, it is better not to design physical facilities that limit the use of a wide range of technologies.

5.4.1 Communications Technology Options – Plant Level

The plant level considers the physical plant used to interconnect points on the network. In traditional networks this would include the cable (fiber or twisted pair) between devices, but in recent years, the introduction of wireless technologies have also allowed wireless equipment to provide a plant level link.

5.4.1.1 Twisted Pair

Twisted pair cable was the original physical plant used for communication networks. The widespread use of this technology by the telephone companies has resulted in robust cables that require little maintenance when installed correctly.

The most significant drawback of twisted pair plant is the narrow bandwidth it can provide. Although compression techniques have greatly improved data speeds, they are still generally limited to low speed data unless costly multiplexing equipment is utilized.

The region has a good quality twisted pair network that operates the traffic signal system. In many cases it may be feasible to intercept the twisted pair cables with the fiber optic distribution cable and connect low data ITS devices that are not located on the backbone or distribution routes using the existing twisted pair cables. Some technologies that may be considered support video over Twisted Pair, with varying degrees of quality and performance.

Utilization of the twisted pair plant in this manner could provide a cost effect method of serving some local, low data devices. It would also reduce the overall length of the twisted pair route, improving transmission quality. Utilizing existing twisted pair cable to communicate with low data devices can also decrease edge communications equipment costs, as many low data devices require costly intermediate equipment to transfer between fiber and their native communications protocol. All of these issues should be analyzed during detailed design of specific network segments.

5.4.1.2 Coaxial Cable

Coaxial cables were introduced to provide increased bandwidth and are still widely used to carry broadband video services by the cable television industry. In intelligent transportation systems they are used typically to make video connections where the cable is 500 feet or less in length, which does not require any transmission equipment.

Although coaxial cables can be used to transport video images for greater distances, the transmission of baseband video signals required in ITS systems is more efficiently carried on fiber optic cable.

5.4.1.3 Fiber

Fiber optic cable has become the preferred choice of physical plant installations for ITS systems. Fiber optic systems can carry very large bandwidth on a single fiber, and cost effective transmission systems are available for CCTV video signals. Fiber has the advantage of low signal loss, allowing signals to be carried large distances without repeaters. Equipment is available that can carry a signal with any of the protocols described in this document between any two points in the city without repeaters. In recent years the cost of fiber optic cable has decreased, and it costs far less than a twisted pair of equivalent capacity.

5.4.1.4 Wireless

As the road allowances have become increasingly congested with cable plant, wireless systems have increased in suitability. Recent developments are making these systems more cost effective and increasing the bandwidth that they can carry.

Many options exist for low speed systems that do not require FCC licensing to operate. These systems typically operate in the 900MHz, 2.4GHz and most recently 5.8GHz frequency bands and employ Frequency Hopping Spread Spectrum techniques where the transmitter and receiver rapidly switch frequencies that allow other users to occupy the same frequency band without interference.[2] While license free systems frequently offer a relatively inexpensive and

[2] Spread Spectrum is a data transmission modulation technique by which the transmitted signal is spread over a bandwidth wider than the information bandwidth. Spread Spectrum radio communications was developed originally by the military because the radiated signals are distributed over a wider range of frequencies and then collected onto their original frequency at the receiver making them difficult to jam or intercept. Spread Spectrum frequency bands are designated by the FCC and require no user license. Currently three license free Spread Spectrum frequency bands have been assigned by the FCC – 902 MHz to 928 MHz, 2.4 GHz to 2.4835 GHz and 5.725 GHz to 5.85 GHz. There are two Spread Spectrum transmission techniques – Frequency Hopping and Direct Sequence.

simplified deployment compared to licensed frequency systems, the popularity of the license free frequency band has saturated the 900 MHz and 2.4GHz bands. In the last few years significant research and development efforts have been made by telecommunication equipment manufacturers to provide wireless broadband access over licensed and license-free frequencies. This effort has intensified with the issuance of the IEEE 802.16, which addressed standards for manufacturing Ethernet compliant wireless metropolitan area networking devices.

Some agencies use frequencies reserved for public safety for wireless transmissions, but are still experiencing interference with other wireless operators. As discussed elsewhere in this document, City of Bend is currently planning on deploying a citywide wireless network. Initial plans involve the utilization of unlicensed spectrum, with future migration to 4.9Ghz, licensed for public safety usage.

When compared to the high cost of cable installation, wireless systems are a viable option. It is expected that they can provide the greatest cost benefit for low speed links in congested areas, and could be considered for short haul communication to ITS devices. Wireless communications may also be considered for remote, low data devices and possibly for phased implementation.

5.4.1.5 Leased Lines

Another Plant level option is to simply lease a twisted pair from a third party. Although there is other equipment that is likely in place on this link, it is not visible to the user, and the link can be considered as a physical plant link between two locations.

Leased links incur ongoing monthly charges, but do not require a large capital outlay to have installed. They carry the same data as a twisted pair cable. They are often used effectively to serve remote devices where it would be too costly to install a dedicated cable.

As a point of reference, a leased T-1 line can often run anywhere from $500/mo to over a $1000/mo, with a DS-3 often running approximately 10 times this amount. However, these costs can vary drastically from region to region and between service providers, and should be verified during detailed design.

5.4.1.6 Leased Fiber

Fiber can be leased from telecommunication providers in the region. Unused fibers contained in cables owned by the private sector telecommunications provider can be segregated and leased exclusively for ITS use.

Although leased fibers incur monthly charges, they provide the full benefit of the fiber optic cable without the capital construction costs. Utilization of leased fiber may be particularly

---

Frequency Hopping Spread Spectrum is a technique by which the frequency band is divided into a number of channels and the transmission hops from channel to channel in a pre-specified sequence. Direct Sequence Spread Spectrum is a technique by which the transmitted signal is spread over a particular frequency range.

advantageous for phased network implementation, with the leased segments being replaced by new construction as network deployment proceeds.

5.4.2 Physical Topologies

There are a number of physical topologies that can be used to interconnect locations on a communication network. This section introduces some example network topologies.

5.4.2.1 Star

Star configurations refer to a topology where each device has one connection to a central point as shown in Figure 5-6. Also called a "home run", these links would be the sole communication path from the device to any other point in the network. This approach is often used in distribution networks, where each device has a single channel back to a node on the backbone. Local links are typically star configurations as well, between the distribution cable and the end device. With some systems, more than one device can share a channel. If these devices are served in series (as illustrated in Figure 5-6) they can be called a multidropped star, where a number of devices share one communication path.

Figure 5-6. Generic Star and Multidrop Configuration

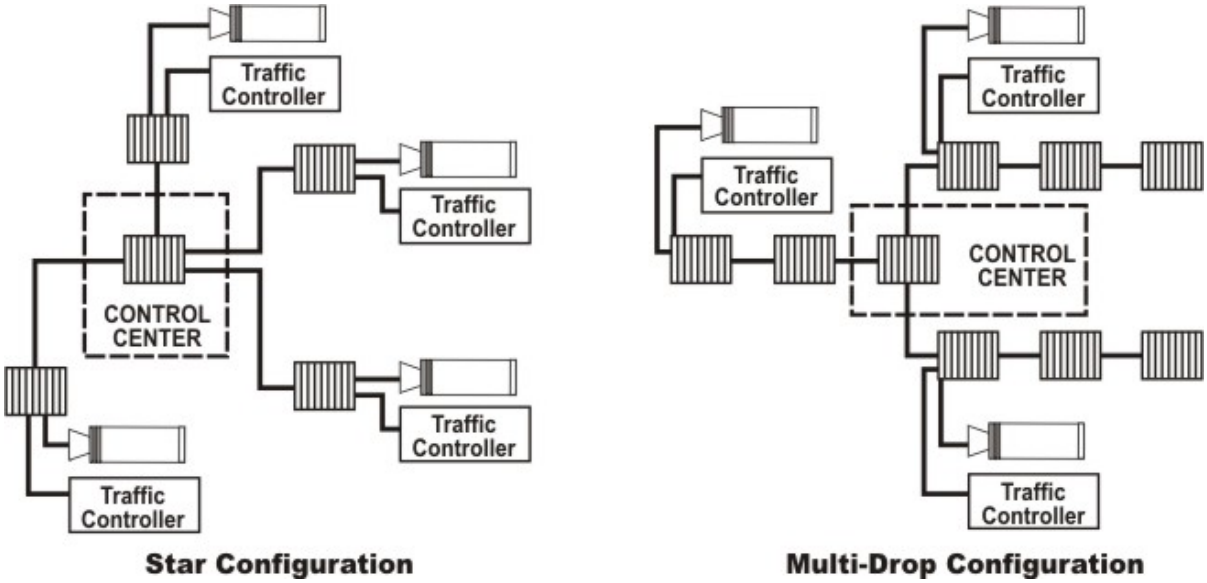

5.4.2.2 Ring

Ring configurations connect a number of devices or locations in a ring. This approach is often used in backbone networks that connect a number of nodes together as shown in Figure 5-5. Each node has two connections, primary and secondary. In this configuration, illustrated in Figure 5-7, the failure of a single communication path or a single node allows the remainder of the devices to communicate without interruption. The use of rings in distribution networks is also possible, although there are a fewer number of types of distribution electronics available to do this.

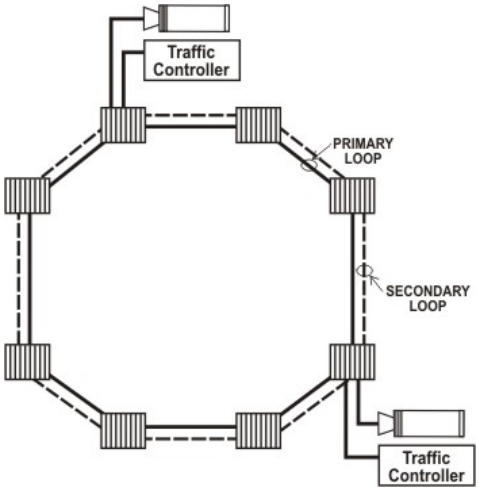

Figure 5-7. Generic Ring Configuration

5.4.2.3 Mesh

In some backbone technologies, particularly TCP/IP, the equipment can accept many different connections (instead of just primary and secondary), and the firmware on the communication equipment can select the routing of the traffic between any two points on the network. (As compared to the ring where the hardware determines the routing). With this capability, a mesh configuration can be established where any number of connections may exist between any two points in the network, as shown in Figure 5-8..

This configuration can provide multiple redundant paths, and allows the system to balance traffic between the nodes in real time. It also provides increased flexibility and growth options for the network. This configuration also provides advantages in a system where there are multiple control points. A virtual TOC concept would be well supported by this configuration.

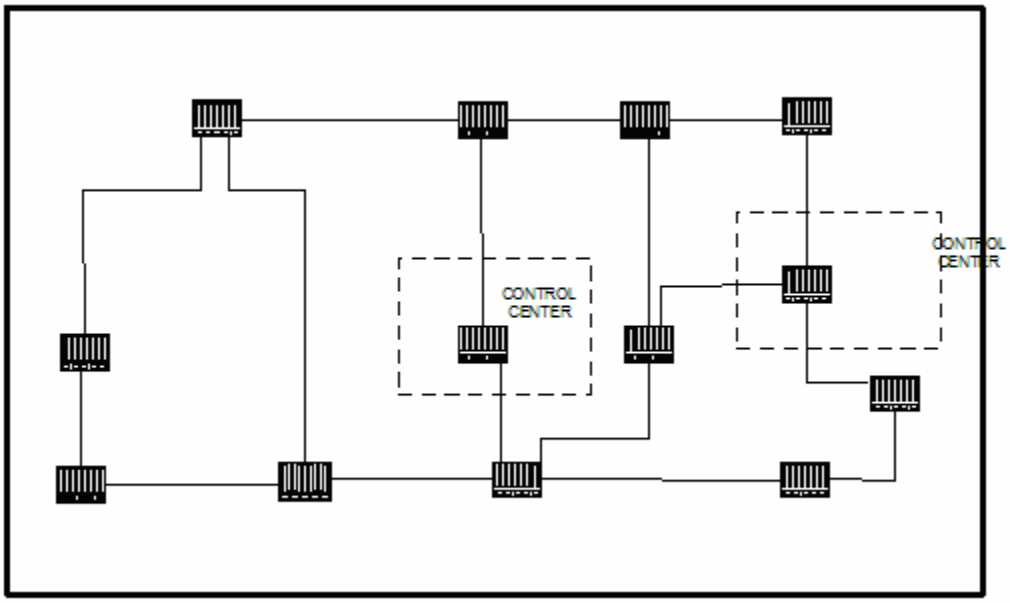

Figure 5-8. Generic Mesh Configuration

5.4.2.4 Hybrid

A Hybrid network combines one or more of the above technologies into a single network. The most common topology is a hybrid with a star distribution network and a mesh or ring backbone.

A hybrid approach is also typically used in backbones where a ring or mesh has a node that is connected by a spur in a star configuration as shown Figure 5-9. In this case the node on the spur has access to the backbone bandwidth, but does have the redundancy that a node on the ring or mesh would have.

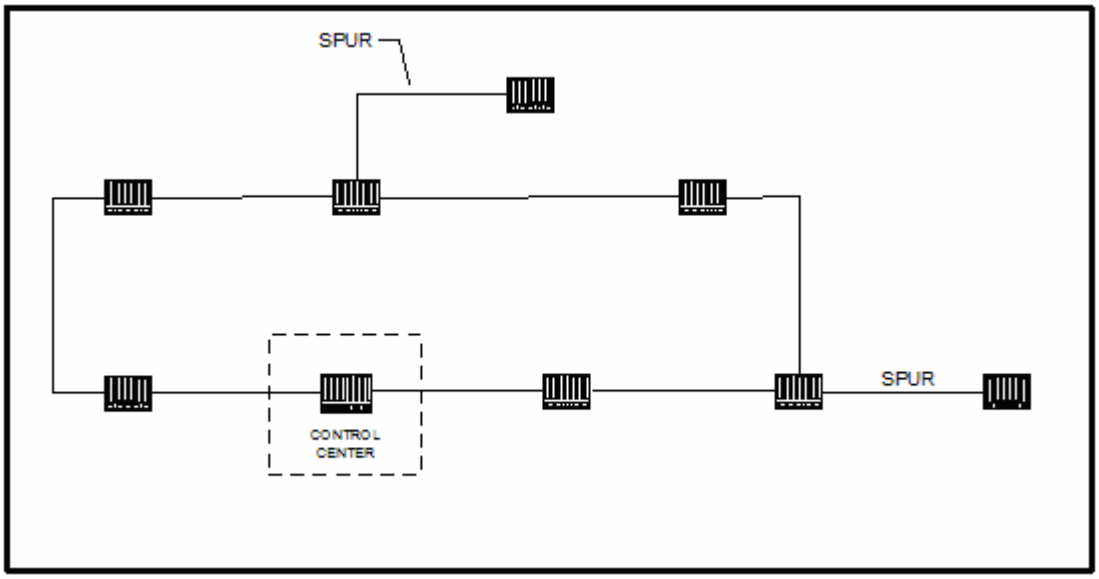

Figure 5-9 Generic Hybrid Configuration

This configuration also provides advantages in a system where there are multiple control points. A virtual TOC concept would be well supported by this configuration.

Another hybrid network is a redundant star as shown in Figure 5-10. In this configuration, each device is connected in a star configuration, but two channels are provided to make the connection. The two channels are contained in the same transmission media, providing redundancy should the electronics on one of the end points fail. As the communication path is common, however, this does not provide any redundancy to communication path failures such as cable cuts.

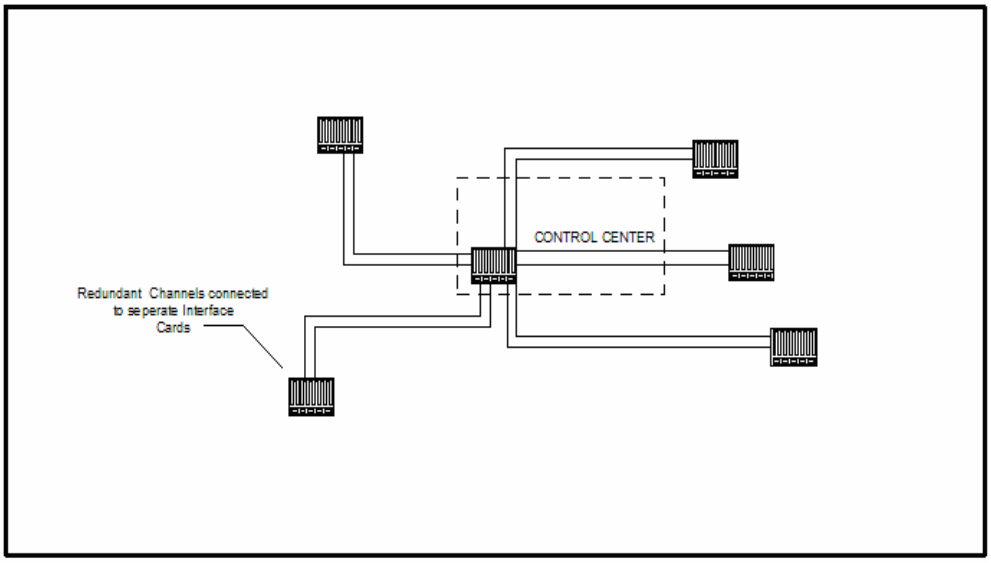

Figure 5-10. Generic Redundant Star Configuration

5.4.3 Backbone Communications Technology Options – Sub-network Level

The most significant decision in the design of the communication network is the selection of the data backbone technology. The selection must consider the current needs, industry standards, and the developing standards.

At this time there are basically only three technologies that are widely used, for which there is a well established base of standards: ATM, SONET and Ethernet. Other backbone systems exist, but they either do not have a full range of accepted standards, or there is not a variety of vendors providing interoperable equipment.

5.4.3.1 Asynchronous Transfer Mode (ATM)

Asynchronous Transfer Mode (ATM) backbones saw their greatest growth prior to the introduction of 100 and 1000MBps Ethernet transmission. This equipment provided high speed connectivity and easily supported TCP/IP (Ethernet) transmission, making it a popular candidate for use in networks that had a high volume of TCP/IP traffic. The equipment provided routing and supported mesh configurations. ATM also provided the first variable bit rate solutions for transmission of video signals.

With the improvement of speeds provided on Ethernet equipment and new advances in digital video, the implementation of new ATM networks has virtually stopped. The same TCP/IP traffic that was the strength of the ATM equipment can be carried in native Ethernet equipment using Gigabit Ethernet (1000Mbps), without translation to ATM protocol. The most common digital video transmission protocols are also now based on TCP/IP protocol.

By eliminating the need for conversion to ATM protocol, Gigabit Ethernet has replaced ATM for use in new networks.

5.4.3.2 Synchronous Optical Network (SONET)

Synchronous Optical Network (SONET) technology is the traditional choice of telecommunication providers, for whom voice transmission is the majority of the traffic. The highly reliable system is based on the provision of established channels that are constantly open between each end point in the system.

The standards for SONET are firmly established and widely followed, and provide for the transport of serial data streams of 1.544 Mbps or higher in a number of protocols. Data services operating at lower speeds or different protocols can be accommodated by adding communication components connected to the SONET network. Transmission equipment supporting pure implementations of SONET is interoperable between vendors.

SONET standards do not provide for Ethernet connections or data channels with lower speeds than 1.544 Mbps. Some vendors do provide multiplexers that will accept these protocols and transport them using SONET protocols and data rates, but these products are not "pure"

SONET, and are not interoperable between vendors – each multiplexer must communicate with another multiplexer made by the same vendor.

An implementation of SONET in the backbone network for the region that would support TCP/IP (Ethernet) and low speed data would require routers at every node to convert the Ethernet signals into data channels that can be carried by SONET. It would also require multiplexers to combine the low speed data channels for ITS applications into a T1 signal (1.544 Mbps) that can be carried by the SONET multiplexer. These additions require a number of other components as shown in Figure 5-11 resulting in a very complicated network, increasing capital cost and complexity in network maintenance.

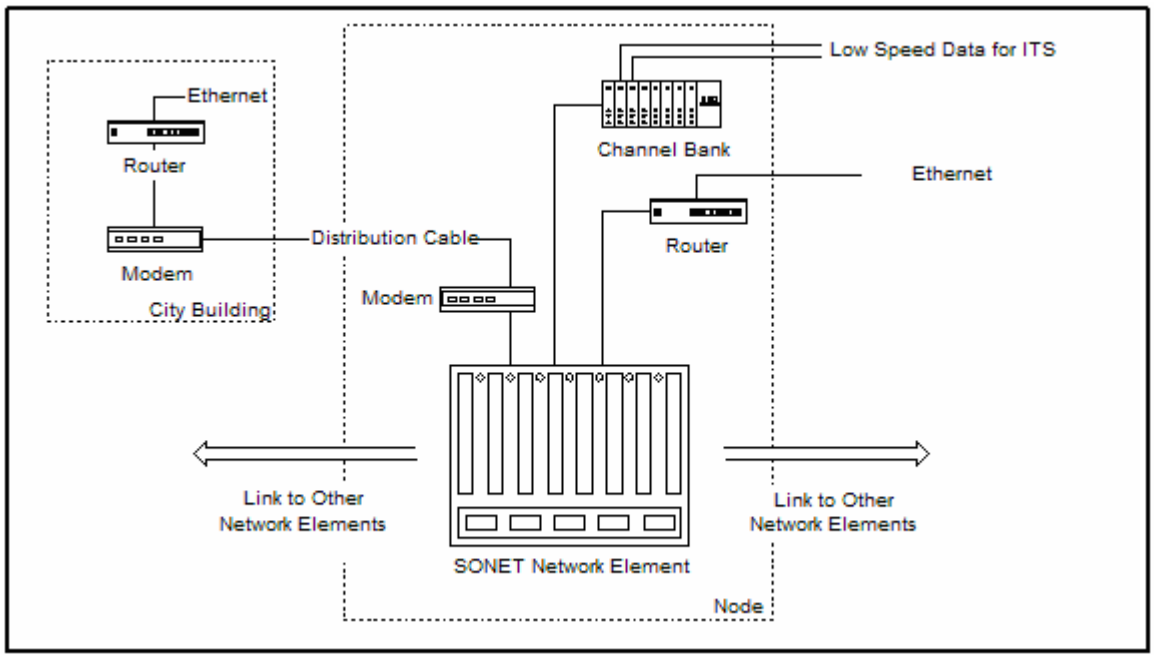

Figure 5-11. Required Equipment for SONET Backbone

The inherent requirement for SONET to assign all channels in a permanent manner can make the system inefficient, unless the transmission requirements are continuous and consistent, and the switching is done outside the backbone network. (This is the case in a traditional telco network.)

5.4.3.3 Ethernet Family

A third network architecture that is increasing in use as the backbone in ITS networks is based on Ethernet. Although invented in 1976, Ethernet has evolved over time to support larger bandwidths. While Gigabit Ethernet (GigE) with bandwidth of 1000 Mbps is beginning to be deployed for ITS applications today, research is underway for higher bandwidth Ethernet switches that will support up to 10 Gigabits per second (Gbps). The increased bandwidth is achieved by continuously refining the Dense Wavelength Division Multiplexing (DWDM)

algorithms programmed into the Ethernet switches. DWDM works by combining and transmitting multiple signals simultaneously at different wavelengths on the same fiber. In effect, one fiber is transformed into multiple virtual fibers. The increased speeds are achieved by increasing the number of available wavelengths on a single fiber strand. The more wavelengths available results in more avenues for the data to get from point "A" to point "B" thereby increasing the overall performance of the Ethernet switch. Given the continued investment into Ethernet by the networking industry, it is reasonable to believe that the Deschutes County ITS network may deploy Ethernet equipment that is capable of well over 10 Gbps during the network's lifetime. Standard TCP/IP protocols are used throughout the network, and the components are widely available and interoperable between vendors.

Ethernet provides a number of advantages:

a) Based on established standards.
b) Provides direct TCP/IP connectivity for center to center connectivity.
c) Allows a standard IP addressing scheme, and subnetting
d) Supports Virtual Private Networking (VPN)
e) Maintains the simple communication configuration.
f) Supported by standard Network Interface Cards (NIC) and drivers, allowing direct connection to the backbone.
g) Equipment is interoperable between a number of vendors, and compatible with the equipment and systems installed in the region's facilities.
h) The extensive use of Ethernet in communication networks worldwide ensures that it will continue in the future.

Under an Ethernet configuration a serial hub or terminal server device would provide the low speed EIA/TIA 232 communication for existing ITS devices using EIA/TIA 232 communication, but this provides flexibility by allowing each port to be addressed with an IP address. Many new ITS devices may be procured with the Ethernet protocol in place of RS-232/422/485 and no serial hub or terminal server device is required. The routers are not required to convert the Ethernet traffic to other protocols for transport. The equipment at a node is greatly simplified as shown in Figure 5-12.

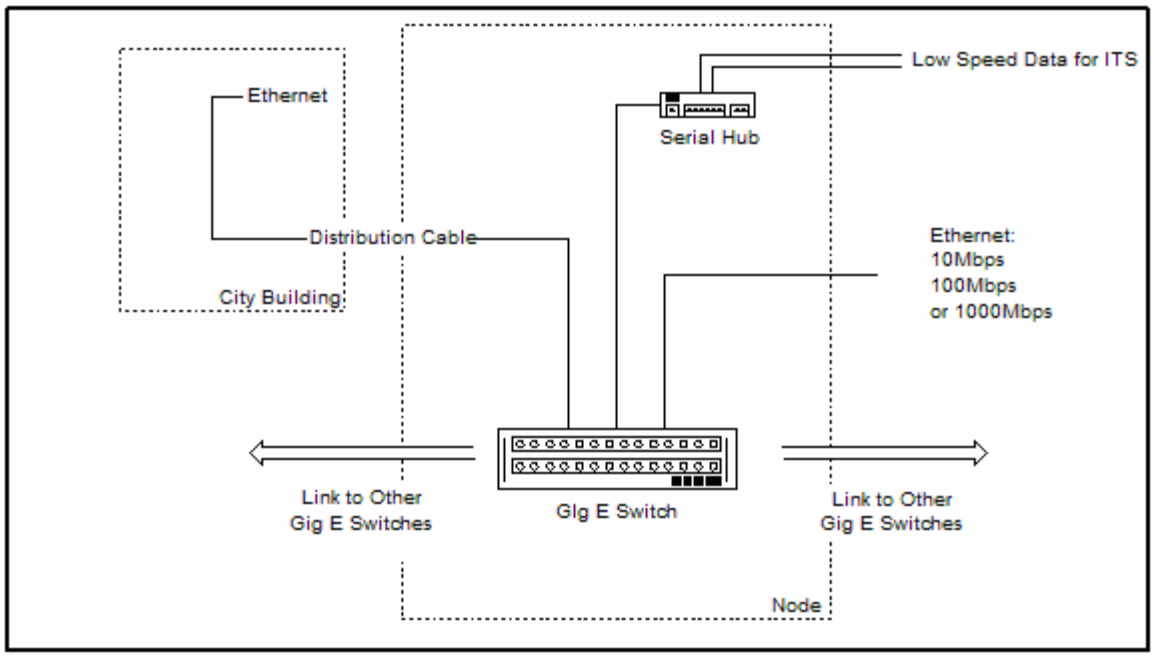

Figure 5-12. Required Equipment for Gigabit Ethernet Communication

5.4.4 Distribution Communications Technology Options – Sub-network Level

The options for communication in the distribution network are driven mainly by the communication protocol used by the ITS device. Most distribution networks support these protocols directly; however, some distribution systems convert signals in a number of protocols into a common channel that can be easily carried on the backbone network.

5.4.4.1 RS-232/422/485

The traditional low speed protocol used by ITS devices is RS-232. This protocol is still widely used, and is one of the two low speed protocols recognized by NTCIP as a standard. RS-422 and RS-485 are similar protocols, and are often found in the circuits used for camera control. These all provide low speed communication, typically operating at 9600 bps or 19,200 bps.

Each of these low-speed protocols was originally designed for twisted pair communication, but are now widely supported by fiber optic components. Although RS-232 is actually a point to point protocol, it can be supported as a multi-dropped protocol with certain fiber optic transceivers. RS-422 and RS-485 have similar interface requirements except that RS-422 is generally point-to-point and RS-485 is a multi-drop protocol.

In addition to simple point to point and multi-drop transmission, there are many options to combine and transport multiple RS-232/422/485 signals on the distribution network. Video/Data transceivers are also available that will carry these protocols and video signal over fiber so that a pair of transceivers can provide the video signal from a camera and the camera control data channel.

Some distribution networks use redundancy, and there are data transceivers that can be connected in a ring over fiber to provide redundancy in case of a fiber failure.

Communication for the ITS subsystems requires the provision of low speed links to the controllers for each device. A number of controllers can typically share each low speed channel, and with NTCIP compliant controllers, functions such as vehicle detection and VMS sign control signal can share the same channel.

As shown in Figure 5-13, the low speed channels can be carried on the distribution cable from the node to the device using fiber optic modems. These modems will carry the signal over a pair of fibers connected in series so that the same pair of fibers can serve a number of modems. When the signals are carried to the node, a modem converts the optical signal to an electrical signal that can be connected to node equipment.

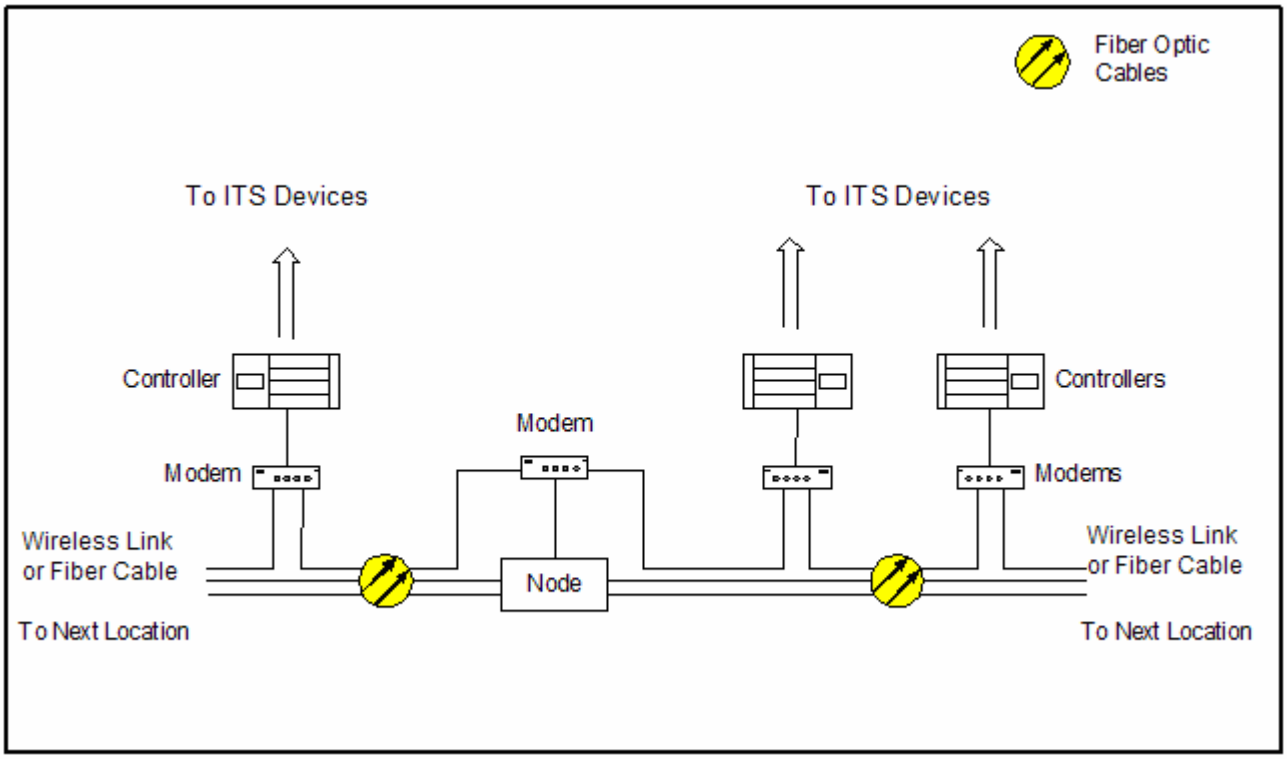

Figure 5-13. ITS Distribution – RS 232

5.4.4.2 Video Transmission

There are two economical methods of carrying the video signals from the field cameras to a control center, simple analog video transmission over fiber optic cables or digitized video carried by the backbone transmission equipment.

Analog video signals can be carried economically over approximately 30-40 miles and provide a full motion video signal. Such transmitters could also carry the camera control signal as described above. Analog video signals differ from digitized video signals in that digital video signals are compressed. Consequently digital video signals require less bandwidth compared to analog video signals.

A number of video signals can be multiplexed and transported over a single fiber. Such systems typically combine from four to twelve signals on a fiber, but systems with as many as 128 signals are available. These systems become economical when there are few fibers available or the transmission distances are greater.

Individual camera signals would be carried on single channel transmission systems to a node location. At the node, a number of camera signals will be multiplexed into one signal that can be carried over a fiber to the Control Center, as shown in Figure 5-14.

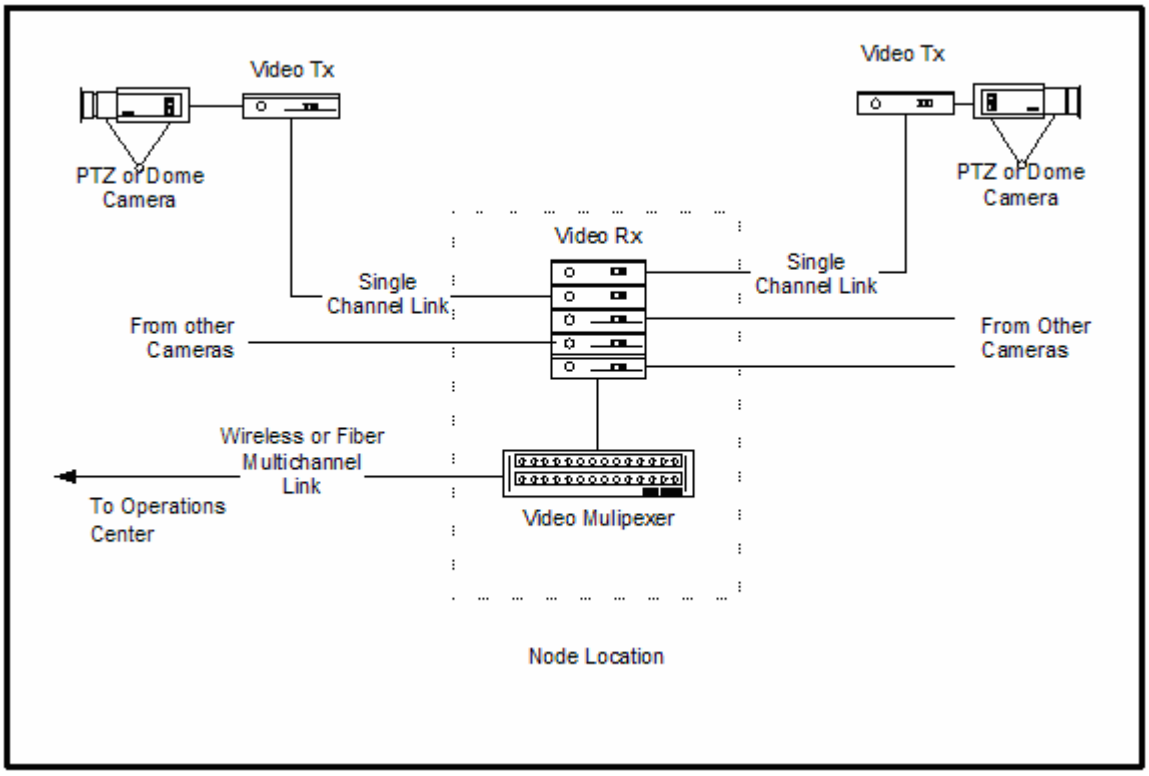

Figure 5-14. Video Links

The trend in the ITS industry is towards digital video transmission equipment that will carry digitized video signals over a TCP/IP network ("IP Video") as shown in Figure 5-15, and the quality of the video images can be equivalent to analog systems. There is significant development occurring in this area, with improved quality using less bandwidth, and the systems are becoming more cost effective.

A significant advantage of IP Video over analog video is flexibility. Analog video signals are typically transmitted over dedicated circuits whereas compressed digital video can be converted to data packets that are suitable for transmission over TCP/IP based networks. This flexibility allows ITS network operators to store, duplicate and transmit (i.e. multicast) identical video streams to multiple users on the network.

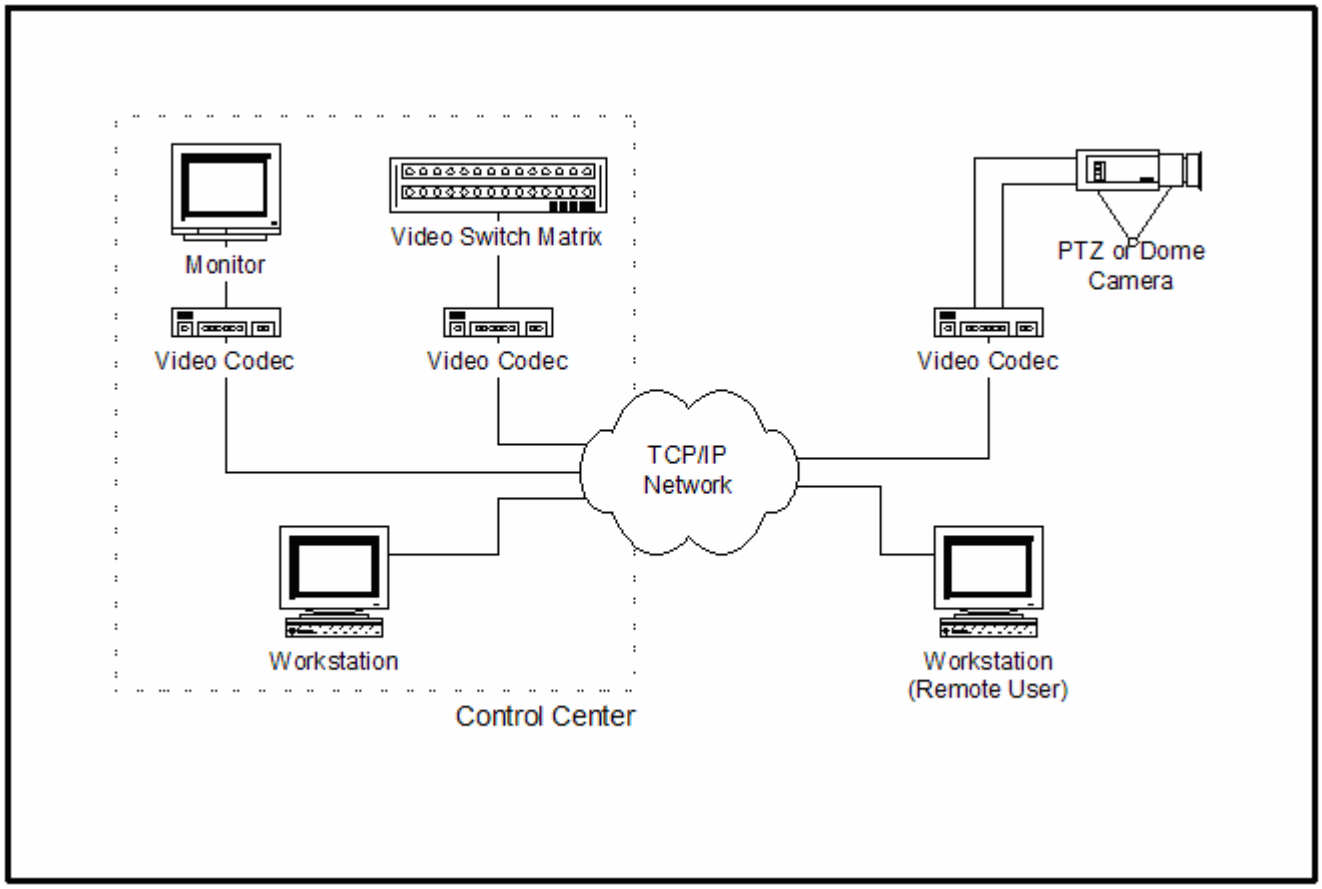

Figure 5-15. TCP/IP Network

5.4.4.3 Ethernet

With the proliferation of Ethernet (TCP/IP) communication in most computing equipment, this protocol is now appearing as an option in many ITS devices. Ethernet is a shared network providing a much wider bandwidth link to each device. (10 Megabits per second (Mbps) Ethernet typically provides up to 2 Mbps of actual throughput and 100Mbps or "Fast Ethernet" provides over 22Mbps). Ethernet protocols also offer the ability to set transmission priorities to the different types of video and data traffic on the network. This allows the ITS network operator to control the Quality of Service (QoS) given to each application using the network.

Ethernet is the second low speed protocol standardized under NTCIP, and is gaining use in this area because the increased connection speed is needed to support the overhead required by the NTCIP protocol. With Ethernet being the defacto standard for office networks and the Internet, it is clear that Ethernet equipment will be available for many years to come.

Where the backbone network is Gigabit Ethernet, the use of Ethernet for the distribution can result in a very simple and flexible network. Small serial hubs can be used to convert RS-232/422/485 signals to Ethernet traffic so that the network can support all data requirements. If IP video is also implemented, all network traffic can be carried as an Ethernet signal as shown in Figure 5-16.

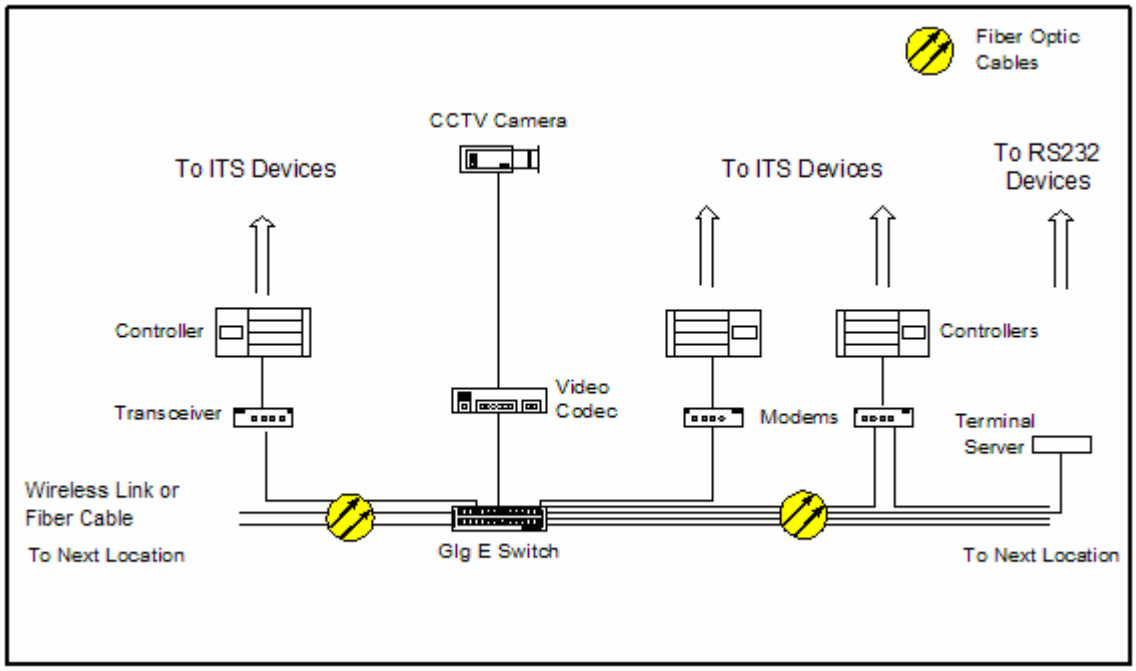

Figure 5-16. ITS Distribution

5.4.4.4 Wireless

Wireless communication is being used for distribution services for an increasing number of systems due to its advantage of not requiring a physical cable installation. Most wireless systems will carry RS-232/485 communication and can be used interchangeably with a pair of fibers and interconnecting fiber as described above.

Ethernet communication can also be accomplished over wireless links, and standards such as IEEE 802.16s are evolving to the point that wireless Ethernet communication manufacturers have begun production of equipment that can provide wireless broadband Ethernet coverage throughout the Bend metropolitan area. IEEE 802.16a is a sister standard of the widely used IEEE 802.11 wireless Ethernet standard. Whereas IEEE 802.11 is commonly deployed in office buildings and has an effective operating coverage of approximately 300 feet from the network access point, IEEE 802.16a operates in the 2-11 GHz licensed and unlicensed frequency bands and is specifically focused on deployment where operating coverage in excess of seven miles.

Microwave transmission is an option in many ITS networks, including Deschutes County. Unlike IEEE 802.16a, microwave communication requires visual line-of-sight between transmitter and receiver and frequency spectrum allocation from the Federal Communications Commission (FCC). However microwave communication would be especially effective in areas with large bandwidth requirements that are located on flat terrain and away from the fiber optic backbone.

Regardless of whether licensed or unlicensed frequencies are employed, encryption of the data at the transmitter with decryption at the receiver is recommended for all wireless applications where risk of interception and/or unauthorized manipulation is not desired. Data encryption can increase overall data throughput anywhere from 15 to 40 percent depending on the type of wireless technology and encryption algorithm and techniques employed.

5.5 COMMUNICATIONS PLAN RECOMMENDATIONS

This section describes the communication plan recommendations, and the process used to reach these recommendations. This methodology starts with the areas to be connected, addresses the configuration to be used, and develops a logical plan to serve the entire area.

At this stage of the process, this plan is a high-level conceptual design of the network. Therefore, as the alternative technologies, architectures and approaches were considered, detailed cost estimating was not performed. Recommendations are based on industry experience, and a higher-level analysis combining the ability to meet requirements, cost, technical maturity, availability of equipment and services and a number of other factors.

It is highly recommended that this plan be considered a guide, and not a final design. It is further recommended that as each network segment enters planning and detailed design, all options be considered for connecting centers and field devices, including:

- Building new fiber optic cable,
- Utilizing the City of Bend's proposed wireless network (particularly once they migrate to licensed spectrum—4.9 GHz for Public Safety),
- Utilizing communications services from the Bend Cable franchise,
- Utilizing existing twisted pair or other copper plant,
- Leasing communications services from private providers,
- Building and implementing new wireless communications links, and
- Leasing wireless communications services.

Finally, as discussed in Section 5.1, it is recommended that this plan be updated regularly, as various segments of the network are built, and as overall design philosophy changes.

5.5.1 Long Term Vision

The long term vision for ODOT and the Deschutes County ITS Communications Plan includes the deployment of a fiber optic network connecting traffic management centers, field communications hubs and field devices, as shown in Figure 5-2. However, this network will likely be built in phases over an extended period of time due to the following factors:

- There is little existing fiber optic infrastructure to connect to/with, requiring extensive amounts of new construction to complete this network,
- Underground utility construction in rocky regions such as Deschutes County tends to be very expensive,
- ITS funding sources—like traditional transportation funding sources—tend to provide periodic, discreet amounts of available funds that will only support construction of segments of the network.

Therefore, it is recommended that ODOT and the Deschutes County ITS consortium, proceed with building this network:

1. Primarily as part of other large capital improvement projects (e.g., road widening projects, sidewalk and/or bike lane improvement projects, etc), where including the additional conduit and fiber cable is only a minor incremental project cost, or
2. In phases, as significant amounts of funding become available, and/or
3. With an initial focus on connecting agency traffic management centers with one another, and with communications hubs connected to a high density of ITS devices, primarily CCTV cameras.

5.5.1.1 0-5 Year Corridors

As illustrated in Figure 5-17, the following corridors have been identified for implementation in the 0-5 Year Plan, meaning that initial construction of any new fiber optic infrastructure should be focused along these corridors. The total fiber path length for these corridors is approximately 18 miles.

- **Hwy 97/Bend Parkway**: Between the north City limits and Powers Road, with "spur" connections to the City of Bend Transportation offices in Downtown, and to CCTV cameras and other devices along 3rd Street.
- **3rd Street (as an Alternate to the Pkwy)**: Between the north intersections with the Parkway and Chase Road, 3rd Street may be a preferable alternate route, as there are opportunities for more aerial construction along this route. The same "spur" connections would be required to the City of Bend Transportation office, and to CCTV cameras and other devices along the Parkway.
- **Hwy 97 (including the Reroute)**: Within the Redmond city limits from the Yew Ave intersection up to King Way, with a spur connection to the City of Redmond Transportation offices on Sisters Avenue.
- **Hwy 97 Business (as an Alternate to the Reroute)**: Between Highland Avenue and King Way, Hwy 97 Business may be a preferable alternate route. Spur connections would be required to the City of Redmond Transportation offices and to equipment on Hwy 97 Reroute.

5.5.1.2 6-10 Year Corridors

As illustrated in Figure 5-17, the following corridors have been identified for implementation in the 6-10 Year Plan, meaning that later phases of construction of new fiber optic infrastructure should be focused along these corridors, once the 0-5 Year Corridors are complete. The total fiber path length for these corridors is approximately 26 miles.

- **Bend Fiber Loop(s) from Hwy 97 to 27th Street**: the following two segments would connect the Hwy 97 segment (either alternative discussed above) to a new segment along 27th Street, forming two separate redundant rings within the City of Bend. A spur connecting to the Deschutes County offices in southeast Bend may be included.
    - **Empire Avenue**
    - **Hwy 20**
- **Hwy 97 between Bend and Redmond**: connecting future CCTV cameras along Hwy 97, and completing the connection between the Bend and Redmond networks
- **Hwy 97 between Powers Road and Knott Road**: connecting future CCTV camers, automated traffic recorders, a weather station, and a variable message sign. Future communications requirements to Sunriver or La Pine may be considered.

5.5.1.3 11-20 Year Corridors

As illustrated in Figure 5-17, the following corridors have been identified for implementation in the 11-20 Year Plan, meaning that later phases of construction of new fiber optic infrastructure should be focused along these corridors, once the 0-5 Year and 6-10 Year Corridors are complete. The total fiber path length for these corridors is approximately 8 miles.

- **Hwy 20 North from Hwy 97 to Cooley Rd:** this is a low priority corridor, connecting to a future CCTV camera and two variable message signs.
- **ORE 126 from Hwy 97 to Hemholts Way:** this is a low priority corridor, connecting to future CCTV cameras located on ORE 126 (including the planned couplet project).
- **Bend Fiber Extensions:** the following three segments would extend the fiber paths in Bend to lower priority ITS devices.
    - **Greenwood Avenue**
    - **Century Drive**
    - **Reed Market Road**

DKS Associates
TRANSPORTATION SOLUTIONS

IBI GROUP

Oregon Department of Transportation

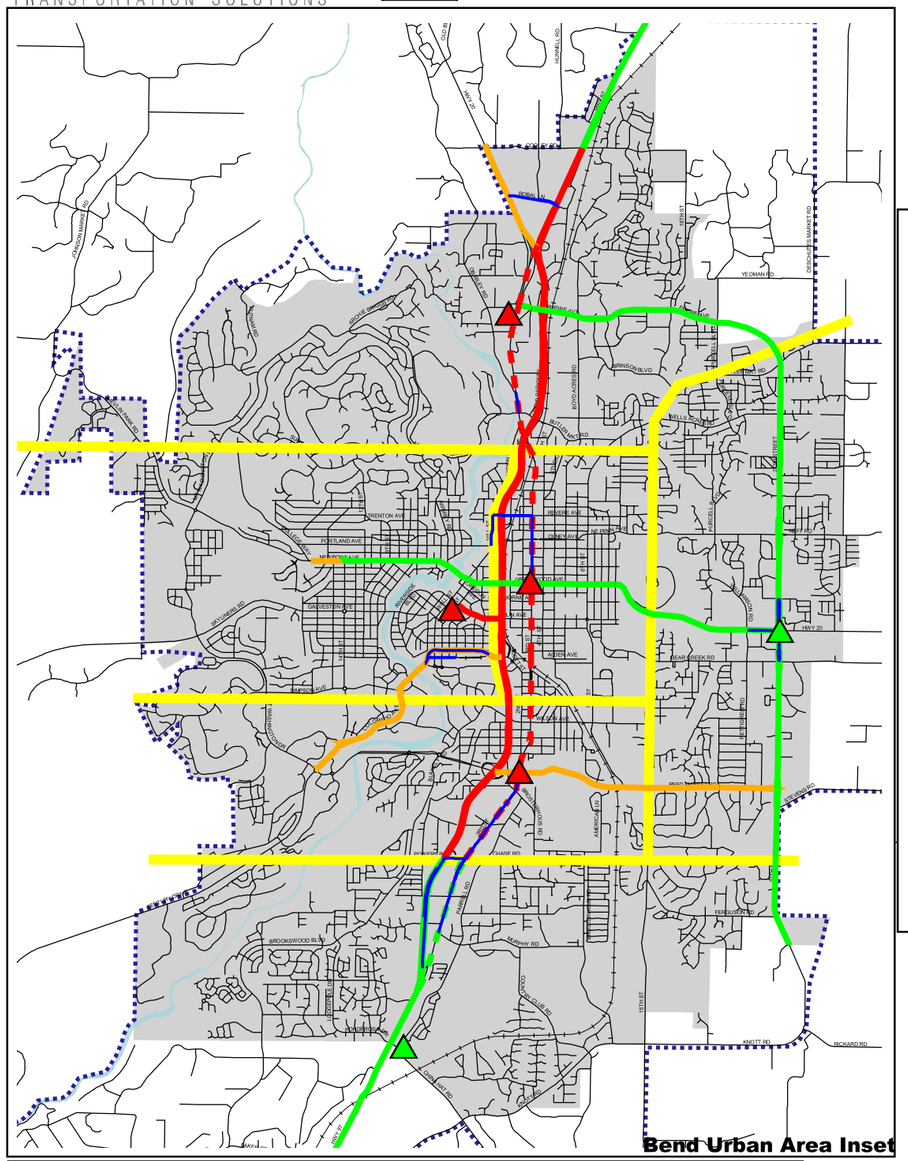

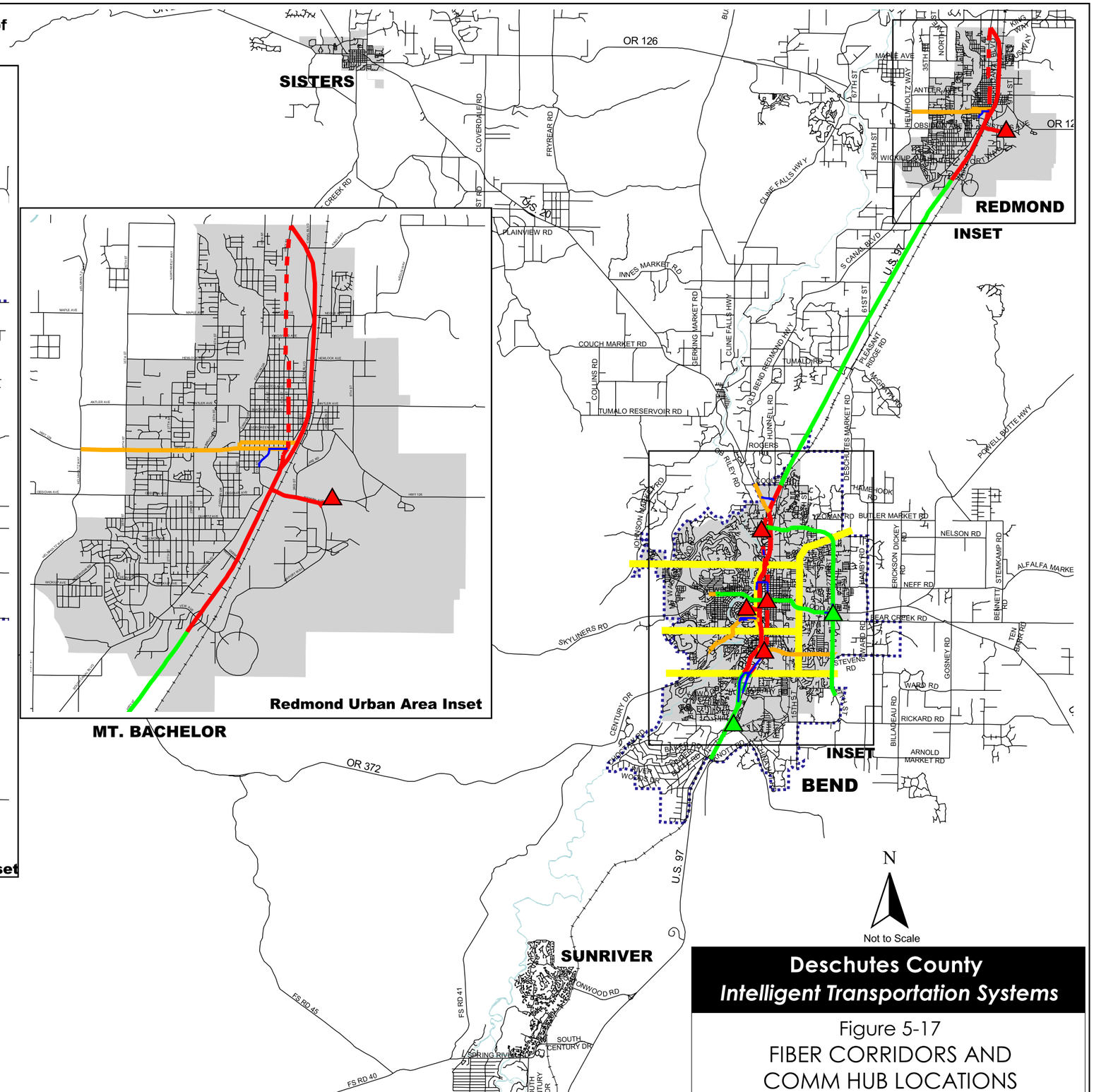

LEGEND

- Bend MPO Boundary
- Railroads
- Twisted Pair Copper Interconnect
- Communications Node Boundaries

Phasing

- Existing
- Proposed 0-5 Years
- Proposed 6-10 Years
- Prooposed 11-20 Years

Communications Equipment

- Proposed Fiber Path
- Proposed Fiber Alternate Path
- Communications Node

N

Not to Scale

Deschutes County
Intelligent Transportation Systems

Figure 5-17
FIBER CORRIDORS AND COMM HUB LOCATIONS

5.5.2 Near Term Implementation

In order to deploy ITS devices in the near term—to begin achieving their benefits and to begin proving the value of ITS investment to policy makers and the general public—ODOT and the Deschutes County ITS consortium may want to consider the following:

- **City of Bend Wireless Network**: Perform a "proof of concept" of the City of Bend's proposed wireless network, with a particular focus on using this as a "last foot/last mile" link to individual field devices. ODOT may want to defer significant investment in (and/or dependence on) this network until such time as links are available on licensed 4.9 GHz spectrum, as opposed to the unlicensed spectrum that the network is initially being built on.
- **Bend Cable Franchise Fiber**: Use the Bend Cable fiber that is available via the franchise agreement with the City of Bend and the City of Redmond, primarily as a center-to-center link and/or as a link between centers and communications hubs that are connected to a high density of devices, especially CCTV cameras. Particular emphasis on the "public safety" usage of this fiber may be required to utilize the franchise fiber.
- **Existing Twisted Pair:** In some cases, utilizing existing twisted pair may be the most cost effective way of communicating with some field devices, especially low data devices such as traffic signal controllers, automatic traffic recorders, etc.
- **Landline and Cellular Dial-up:** ODOT is already utilizing both cellular and land-line dial-up connections to communicate with some field devices. This approach may continue to prove a cost effective way of communicating with some devices, particularly as a temporary solution.

5.5.3 Video Transmission

It is recommended that the video signals on the network be transported as digitally encoded video. In order to utilize the Bend Cable network, support transmission over multiple networks, and to easily share video with other agencies, video must be converted to IP data at some point in the network.[3] By using IP video transmission throughout the network the video can be easily routed to users at any point on the network.

The use of IP Video also supports a single backbone transmission system, instead of two (analog video and data transmission). This minimizes the number of fibers that are required, and would introduce cost savings in cases where fiber channels are leased.

Since the vision for the ITS network in Bend includes multiple transportation and emergency management agencies, it is expected that several video images will be of interest to more than one agency. This will occur where ODOT corridors intersect with city corridors, as well as along routes that are shared between agencies, such as the Bend Parkway and 3rd Street

[3] Analog transmission can not be used since it requires a separate network and video receivers at the users location. Since these receivers can not be moved easily to accommodate a "virtual control center", the video is converted to IP traffic that can easily be directed to the users IP address, no matter where they are connected in the network.

corridors, where one agency is responsible for signal control while other agencies may be responsible for Incident Response. In these circumstances one video image is commonly required at more than one control center. With digital video this is accomplished simply by sending the IP stream to a select group of users on the network with one transmission. This process is known as multicasting[4]. Analog systems do not support multicasting, so to distribute the video to multiple locations requires distribution amplifiers and additional video channels between control centers.

Digital video transmission should adhere to a current Motion Picture Expert Group (MPEG) standard. At this time, the most widely used standard is MPEG-2, which would support traditional video display devices, and also allow standard web browsers to view the video stream over an Ethernet connection to the backbone network. The most current and appropriate compression technology should be reviewed as the video system is designed and the communication plan is updated on a regular basis.

5.5.4 Backbone Communications

It is recommended that ODOT and the Deschutes County ITS consortium proceed with Ethernet, minimum of Gigabit Ethernet (GigE), as the recommended technology for backbone transmission. The primary reasons for this recommendation are as follows:

Recommendation:
Convert analog video to digital. Digital video provides the greatest flexibility for sharing video between multiple agencies.

- The opportunity to use leased services provides the greatest cost benefit when all services are carried on one backbone. This is possible with GigE and IP Video.
- The potential hybrid wireless/fiber/leased network within this geographical area is well suited to Ethernet deployment.
- Ethernet will support transmission of the recommended IP Video without any additional transmission equipment.
- Ethernet will directly support NTCIP standards for center to center communication, as well as NTCIP communication over Ethernet to field devices.
- Ethernet is mid-span compatible[5] between vendors, allowing different agencies to select different hardware for their portion of the network, and allowing open procurement.
- Ethernet provides Quality of Service (QoS) levels that can assign a priority (or QoS) to data from different ports. This allows prioritization of the services to be provided if the network

[4] Most IP traffic uses unicasts, where traffic is sent from one IP address to another. With video, the traffic can be multicast, from one address (the camera) to a number of receivers in one transmission. This reduces network traffic by sending the data only once to two or more receiving locations. A third transmission mode, broadcast, sends from one address to all other addresses. Broadcast transmission is typically only used for short messages to all devices, and must be used with caution if the receiving devices must respond to the broadcast command, as they can easily overload the communication network.
[5] When equipment is mid span compatible, products from different vendors will function fully when interconnected.

is operating in a failure mode or peak traffic period. The IEEE 802.1.p standard delineates eight categories for prioritizing traffic at the Data Link layer of the Open System Interconnection (OSI) model. At this time many Ethernet equipment manufacturers do not strictly follow IEEE 802.1p. Instead they employ two or three categories of traffic prioritization, which are typically proprietary in nature. Therefore, ITS networks desiring a high level of QoS should strongly consider standardizing on a single Ethernet switch manufacturer within the communication hub and Traffic Operations Centers.

Reasons Ethernet is recommended over SONET

SONET transmission offers very fast switchover to redundant rings and dedicated channel capacity to any point in the network. It does not provide the advantages of Ethernet in the following areas however:

- A pure SONET implementation does not support TCP/IP traffic that is specified in the NTCIP standards, or the low speed data channels. In these cases, additional channel banks or multiplexing/encoding hardware would be required.
- Proprietary SONET implementations will support video, Ethernet and low speed data directly, but once a type of equipment is selected for the ring, the same vendor must be used elsewhere. This could be a problem in multi-agency networks.
- The corridors in the region do not easily provide logical large scale rings for SONET implementation. This would require additional hardware to interface multiple smaller rings, and may require additional fiber between nodes were more than one ring must be installed in parallel.
- SONET networks set up channels and reserve bandwidth between points on the network. Where the data requirements change, particularly as routing for video is changed, the channels would have to be re-routed through the nodes. Standard SONET implementations do not do this automatically, or in a user-friendly manner; it must be completed trough changes at the network management system.
- Generally, SONET has a higher cost per node, particularly when the equipment required to covert the low speed RS232 signals for transport on the SONET network are included.
- Overall cost and complexity of SONET network (due to the points discussed above) is not justified by regional redundancy requirements.

Asynchronous Transfer Mode (ATM)

Asynchronous Transfer Mode (ATM) is a network technology based on transferring data in cells or packets of a fixed size. The small, constant cell size allows for the efficient transmission of video, audio and data on the same network. ATM equipment is expensive to procure and requires a high level of training to operate and maintain compared to Ethernet and is not recommended for ITS networks.

5.5.4.1 Distribution

At this time, the recommended protocol for distribution to most existing devices is RS-232 communication, but all detailed design should support a migration to 10/100Mbps Ethernet. This recommendation is based in large part on the installed base of RS232 traffic signal controllers, and the fact that Ethernet based controllers using NTCIP protocols are just becoming available now. As new versions of controllers are made available in the market, Ethernet communication should be considered, as it will likely become the standard in the future.

To provide RS-232 distribution to field devices over the Ethernet network, small terminal servers or serial hubs should be used. These devices are up linked to the Ethernet network on the backbone, and provide a number of RS-232/485/422 ports, each addressable with a unique IP address. The central computer would communicate over the Ethernet network to the serial hub, where the data would be converted. From the hub to the end device, fiber optic links, wireless links or twisted pairs could be used as determined in detailed design.

Where possible, field nodes would be co-located at video camera locations, allowing video to be encoded and directly inserted on the backbone. When this is not possible, the video signal must be carried on the distribution network. It is recommended that the video image could be converted to IP video at the base of the pole, and transported using video transceivers to the node. This approach eases a later migration to Ethernet.

Recommendation:
Migrate to IP addressable field devices as they become available. In the interim, provide terminal servers to support the Ethernet transmission standard.

5.5.5 Potential Hub Locations

Figure 5-17 illustrates example potential hub locations. As illustrated in this figure, the region has been segmented into logical sections for planning purposes — based on location and density of potential future equipment. Within these different segments, potential communications hubs have been identified, based on proximity to the future fiber backbone, and approximate centralization within the geographical segment. Actual location of these hubs will be determined based on field conditions and may vary based on the final network architecture (particularly if the City of Bend's wireless network supports the regional ITS needs.)