CHAPTER

5 COMMUNICATION REQUIREMENTS

5.1 INTRODUCTION

This chapter outlines a communication plan for the Salem-Keizer Metropolitan Area that will support transportation requirements for data and video transmission.

The basic purpose of the communication network is to provide the communication links between various end points on the network (e.g. field devices and centers). These end points are distributed across the region and can include everything from a camera to a central traffic signal system server to a 911 call center.

The communication network defined in this chapter will support communication required for ITS deployment between selected points in the region as identified in the deployment plan (Chapter 6). It will provide a backbone communication system, as well as a distribution network to reach the individual devices or control locations.

5.1.1 Methodology for Developing Salem-Keizer Communication Plan

The methodology used to develop this communication plan follows a bottom-up approach. The analysis begins with a definition of the current communication requirements, then overlays the future requirements and proposed technologies that should be supported. Based on the defined communication requirements (current and potential), a communication model for the entire network is developed. This model establishes the general configuration of the communication network and the basic protocols that will be supported. The final stage of the communication plan development determines how the plan is applied to the actual deployment of the communication network, e.g. how is the implementation phased.

The communication plan should be considered a living document that is updated on a regular basis, as the communication needs change, to follow improvements in technology, and to reflect the implementation of various portions of the network.

5.1.2 Communication Plan Guidelines

A number of guiding principles have been used in the development of this communication plan. These principles must also be considered during the detailed design:

- **Reliability**: The system must provide a high level of reliability, achieved through the use of components with a high mean time between failures (MTBF) (i.e. 8-10 years), combined with a redundancy in the network design. Included in this category is an ease of operations and maintenance of the network by agency staff. A more detailed discussion of Operations & Maintenance (O&M) is provided in section 5.6 of this chapter.

- **Growth**: The network must be expected to grow gracefully. This requires the incorporation of a reasonable amount of unused capacity (i.e. 40% to 50%) and a design approach that allows extra capacity to be provided by upgrading the transmission equipment.
- **Standards**: Communication protocols and component selection must use widely accepted standards that minimize ongoing operations and maintenance costs.
- **Flexibility**: The network configuration must be designed to maximize flexibility to accommodate future changes, rearrangements and equipment changes.
- **Decentralized**: As the network supports several agencies, it must be configured around several centers of control, and allow the control location to be changed according to current needs.

5.1.3 Application of the Communication Plan

This chapter defines a high-level planning approach to ITS communication for the Salem-Keizer Metropolitan Area. This plan provides the guidelines to be used in the development of the detailed design for each section of the communication network. As the opportunity arises to construct a section of the network, through funding or provision of facilities by a third party, the detailed design for that section will be completed.

The regional plan addresses the configuration and implementation approach, but it does not determine exact routing, equipment selection and capacities. These aspects of the communication network are best finalized during detailed design as a section of the network is implemented, allowing the most up to date requirements to be incorporated in sizing, and current transmission equipment to be selected. In municipal networks, cost effective facility routing and equipment locations can be selected if the implementation considers the plans for road reconstruction and construction or renovation of buildings that can be used for communication equipment. The approach summarized in the following three subsections is recommended for each detailed design:

5.1.3.1 Pre-Design Planning Review

Before the start of the detailed design, typically at the same time as the documents are prepared to seek funding for the design, a brief pre-design planning review should be prepared. This document should typically be no more than two pages and should address the following topics:

- Key elements of the design that are required by the communication plan. These should include provisions for future growth and for geographic areas beyond the scope of a particular detailed design.
- Aspects of the design that will not follow the communication plan, with justification for these changes.

The purpose of the pre-design planning review is to ensure that the concepts and principles of the communication plan are considered in the detailed design. For example, if a road is being reconstructed, and it is known to be on a planned backbone communication route, this approach will ensure that the detailed design (even if it is only a small section of the ultimate backbone) provides for the future needs. These provisions could accommodate the future capacity with the initial installation or provide conduit and equipment mounting space for future installation.

5.1.3.2 Final Planning Review

After the completion of the detailed design of the specific network segment, the pre-design planning review should be finalized to include any changes that have been made during the detailed design. The final planning review should document any provisions made in the detailed design to support the communication plan (for instance, spare capacity, routing or configuration considerations). It should also justify deviations that have been made to the communication plan.

An important aspect of the final planning review is to identify if there is a need to update the master communication plan, either in whole, or in part.

5.1.3.3 Communication Plan Updates

As sections of the network are implemented, and as technology and communication requirements change, the communication plan should be updated as required. At any given time, the "current" communication plan should consist of the plan itself, and any planning reviews that have been conducted. A current list should be maintained with the communication plan, and updated as required.

5.2 Existing Communication Infrastructure

Chapter 1: Current & Future Transportation Conditions includes a section on existing communication infrastructure. This section identifies existing equipment and infrastructure that is owned and maintained by ODOT, Polk County, Marion County, City of Salem, City of Keizer and Cherriots. This existing infrastructure is illustrated in Figure 5-1 and summarized in this section.

In addition to the existing infrastructure, each agency was asked about their near-term plans and future vision for communications—independent of the new requirements defined in this regional ITS planning effort. The results of these discussions are included in this section as well.

5.2.1 Fiber Optic Infrastructure

There is limited public agency installed fiber optic infrastructure in the Salem-Keizer area, but there are existing projects and plans that intend to install a significant amount of new fiber optic cable. ODOT is currently designing fiber optic infrastructure from the radio tower on the east side of Interstate 5 north of State Street south to Kuebler Boulevard. In addition, ODOT has plans to install fiber optic infrastructure from this radio tower site west to the Northwest TOC providing a direct connection to the field devices on Interstate 5. The City of Salem is also installing fiber optic cable with all of their new traffic signal construction projects and has plans for new fiber optic cable south of the City of Salem offices to Mission Street and east to Interstate 5. Once these plans are fully implemented a center-to-center data and video exchange agreement could be established between the ODOT Northwest TOC and the City of Salem using agency owned fiber optic cable.

SALEM-KEIZER METROPOLITAN AREA ITS PLAN

EXISTING AND PLANNED COMMUNICATIONS INFRASTRUCTURE

August 2005

FIGURE **5-1**

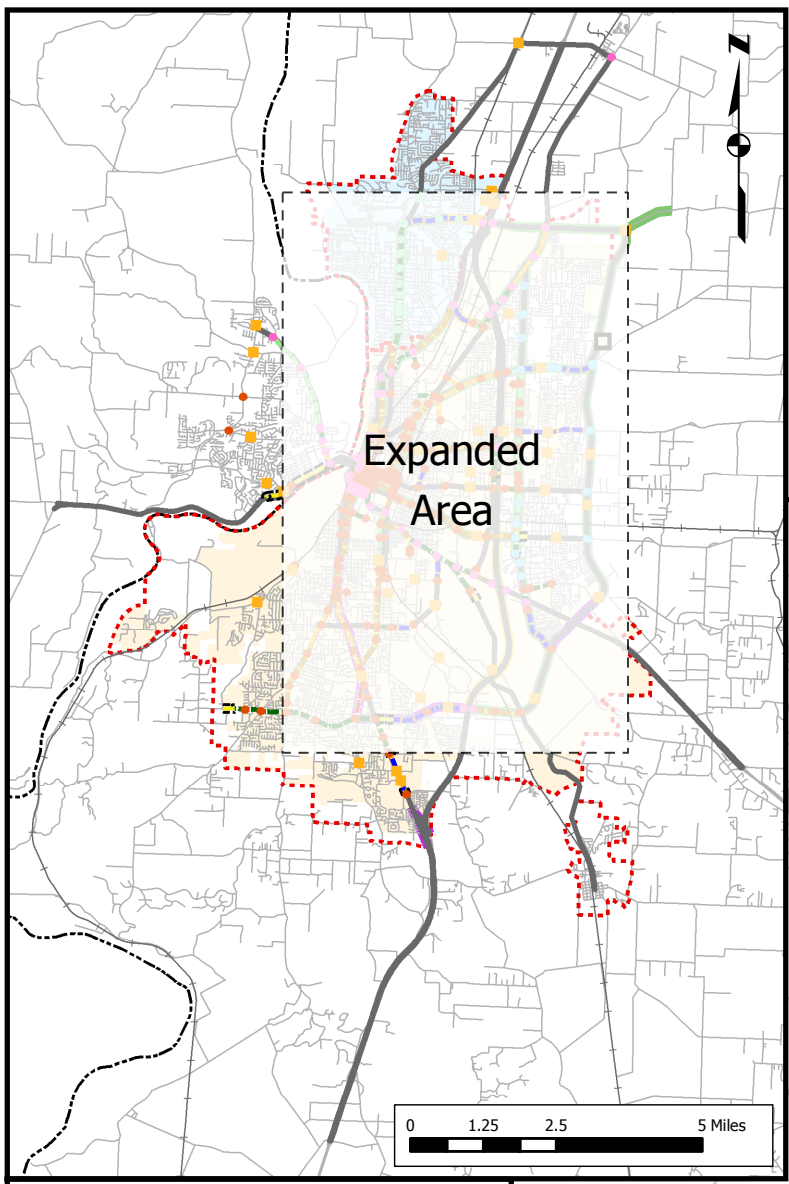

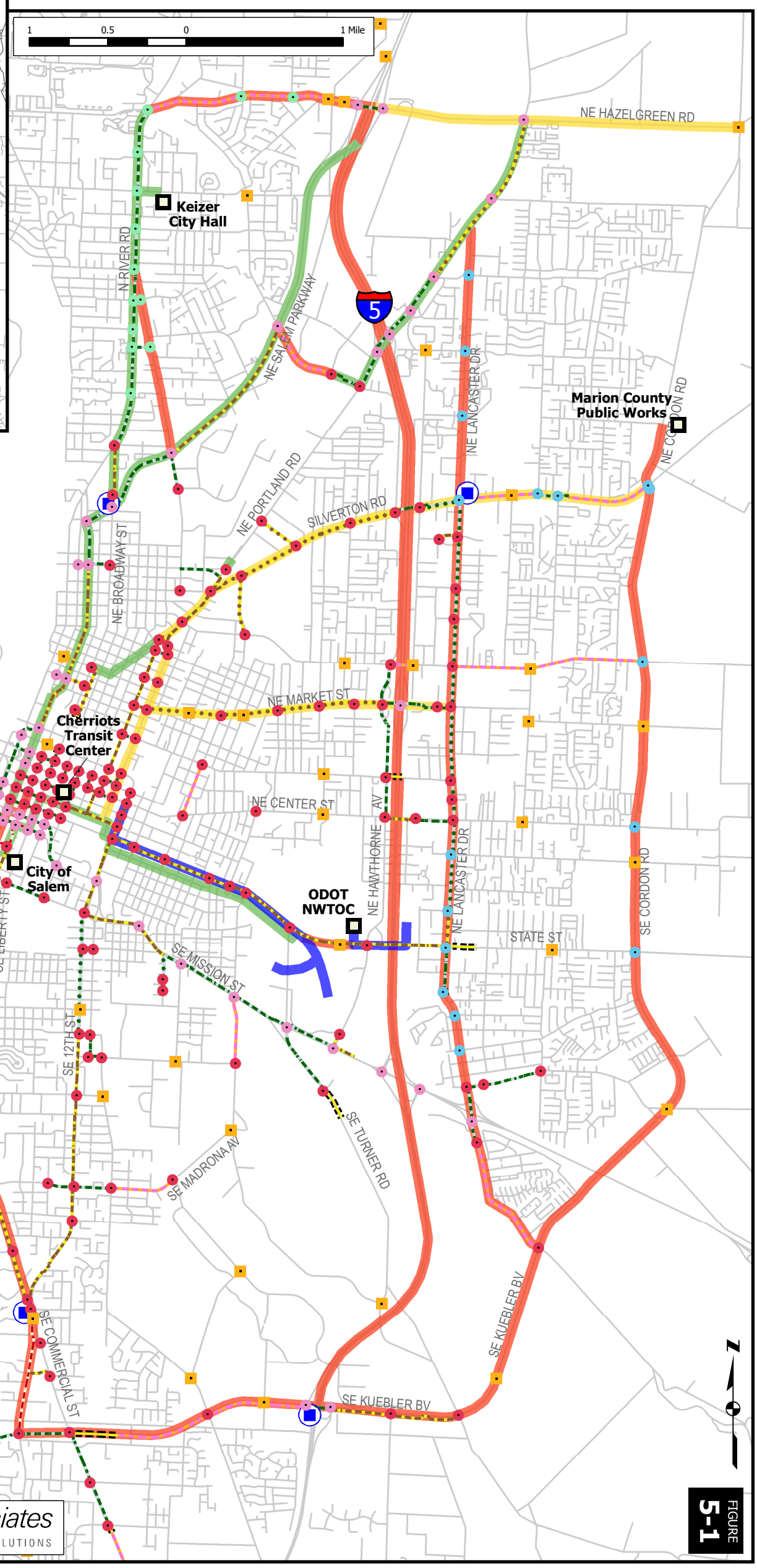

Legend

TRAFFIC SIGNALS BY OWNERSHIP

- PLANNED
- SALEM
- ODOT
- MARION COUNTY
- KEIZER

FIBER OPTIC CABLE

- EXISTING
- PROPOSED 0-5 YEARS
- PROPOSED 6-10 YEARS
- PROPOSED 11-20 YEARS

- CENTERS
- COMMUNICATIONS HUB

SALEM INTERCONNECTS

- 25 PAIR CONDUIT
- 12 PAIR CONDUIT
- 12 PAIR OVERHEAD
- 6 PAIR CONDUIT
- 6 PAIR OVERHEAD
- CONDUIT W/ PULL WIRE
- FUTURE FUNDED I.C.

CITY LIMITS

- KEIZER
- SALEM

- STUDY CORRIDORS
- ROAD NETWORK
- COUNTY BOUNDARY
- RAILROAD
- URBAN GROWTH BOUNDARY

5.2.2 Copper Twisted Pair Infrastructure

The City of Salem currently has copper twisted-pair (12 pair) infrastructure interconnecting approximately 190 of the 230 traffic signals with the central signal system server. Today, the copper twisted-pair infrastructure is used for communications between traffic signals. Generally, all copper twisted pairs in the downtown area are currently in use. Outside the downtown area, there is two to four pair available for use.

Currently fifteen traffic signals are without communications; although construction projects will reduce this number to six traffic signals within the next few months. The remaining traffic signals utilize a variety of communications methods. In particular, thirteen traffic signals are supported by leased telephone lines.

The current central signal system, BI-Trans QuicNet/4.1, utilizes two pairs of twisted copper per communications channel (one pair for transmit and one pair for receive) and therefore utilizes all of the twisted pair capacity. The City of Salem has successfully deployed a variety of Ethernet-over-Copper devices on a limited basis and has obtained bandwidths of 4 Mbps at distances of 9,200 feet and 1.6 Mbps at distances of 30,000 feet through two separate pilot projects. Expansion of this technology throughout the Salem-Keizer area offers the potential to deploy ITS field devices using the existing communications infrastructure on an interim basis until fiber optic cable is installed.

5.2.3 Wireless Network Infrastructure

The City of Salem and ODOT currently use wireless communications for some individual field devices. Code Division Multiple Access (CDMA) cell modems are used by ODOT to communicate to portable dynamic message signs and the City of Salem to communicate with seven traffic signals.

The City of Salem has deployed IEEE 802.11b (11 MBPS) technology at a number of traffic intersections to support traffic controller data and CCTV communications. In addition, IEEE 802.11b is used for communications across the river between West Salem and Salem.

5.2.4 Leased Infrastructure Alternatives

Local telecommunications providers in the Salem-Keizer area include ComCast, Qwest and AT&T. These agencies own fiber optic cable in the Salem-Keizer area that may be available for lease. However, access points to a telecommunications providers' fiber optic cable are generally limited to only a few sites within the City. To access the telecommunication providers' fiber optic cable the public agency would need to install the "last mile" of cable from the point of presence (POP) to the field devices or transportation operations center. In addition, a large telecommunication provider such as Qwest or SBC, is not in the business of leasing fiber to only provide communications to the limited number of transportation management centers and field communications hubs that is typical in an ITS network[1]. To lease their infrastructure would require a much greater commitment to access points, such as Statewide, then what is envisioned for the Salem-Keizer Metropolitan Area.

[1] Based on meeting with AT&T sales representatives on February 25, 2005 with Dennis Jorgensen, ODOT and Jim Peters, DKS Associates.

5.3 COMMUNICATION REQUIREMENTS

This section considers the end devices and centers to be supported on the network and the associated requirements for local communication facilities. All of these devices and centers, considered as a group, form the communication requirements for the region, which must be supported by the communication network. The following deployment plan chapter (Chapter 6), discusses the proposed ITS projects in more detail and illustrates the ITS field device locations in Figures 6-1 through 6-6.

5.3.1 Requirements for Existing and Planned Devices

The network must be designed to support the various communication needs of the region; now, in the near future, and for the long term. This section describes the current and future requirements for communication that the network must accommodate, including the planned devices identified in the deployment plan.

The detailed design of any section of the network should support all current requirements, and provide for future requirements. Where the exact deployment of the planned equipment is not finalized, or in those cases where there is a significant incremental cost, the provision for these future requirements may be limited to the following:

- Installation of appropriate cable sizes, or the installation of underground conduit for future cable installation
- Sizing of equipment enclosures, cabinets, and facility rooms to accommodate the future requirements
- Sizing provisions for power to include the load for future equipment
- Choice of transmission systems that will allow modular expansion to support the anticipated future requirements

5.3.1.1 Traffic Signals

Traffic signals in the region are operated by two separate agencies as shown in Table 5-1; the City of Salem operates the vast majority of the signals in the project area. Included in the 230 traffic signals operated and maintained by the City of Salem are 14 signals owned by the City of Keizer, 16 signals owned by Marion County, and 36 signals owned by ODOT. Additionally, ODOT operates and maintains 13 traffic signals in the project area.

Table 5-1. Regional Traffic Signals

Agency	Number of Signals Operated	Controller Types	Software	Communication
City of Salem	230	170	BI-Trans with QuicNet 4.1 Central Software	190 of 230 signals are directly connected to the BI-Trans server using copper twisted pair. Remaining signals use either CDPD cell phone modems, IEEE 802.11b, telco phone lines. Six remote traffic signals do not have communications.
ODOT	13	170	Wapiti W4IKS	None
TOTAL	243			

Current Requirements

The City of Salem is the only agency in the Salem-Keizer Metropolitan Area that currently has remote communications to their traffic signals. Their current network configuration uses two twisted pairs per communication channel to connect the QuicNet central computer at the City of Salem to the traffic signal controllers. Each channel (two pairs) can theoretically support up to thirty-two traffic signal controllers as shown in Figure 5-2, however most agencies (including the City of Salem) employ much smaller signal groupings in order to ensure adequate bandwidth is available. QuicNet is a central/distributed signal system that provides the City with full upload and download capabilities and a visual display of local intersection status. The QuicNet central computer does not directly control the local traffic signals, but it does allow remote access to the local traffic signal controllers for status information and upload/download capabilities. Communication to the local controller is accomplished using EIA/TIA-232 communication, commonly referred to by its original name, RS-232.

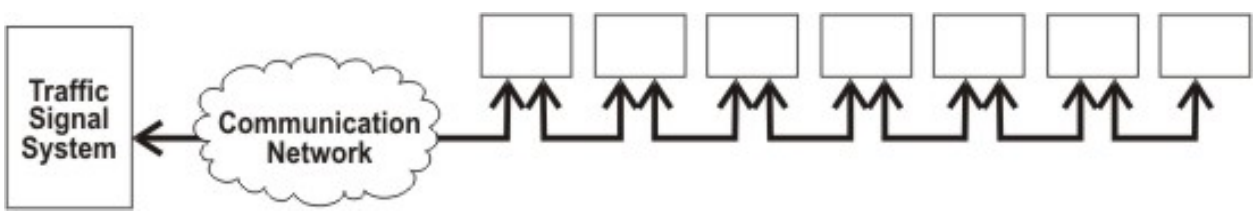

Figure 5-2. Traffic Signal Communication

Future Requirements

It is expected that ODOT, in addition to the City of Salem, will have remote access to traffic signals via a central traffic signal system. ODOT's access to the City of Salem traffic signals would likely be limited to activating and deactivating an incident management coordinated timing plan from the Northwest TOC. Within the timeframe of this plan, the traffic signal controllers will likely be upgraded to advanced transportation controllers (ATC) to support future functionality such as direct IP communication to the controller, higher speed upload/download capability, advanced signal control features such as transit

signal priority and adaptive signal control and more intelligent recovery methods after signal preemption. The future ATC controllers will support the National Transportation Communications for ITS Protocol (NTCIP) and allow the agencies to install software from a variety of vendors on the same hardware platform.

NTCIP protocols will allow RS-232 or Ethernet communication to each controller. The data loading is dependant on the manufacturer's implementation of the protocol, but many of the ATC controllers today support communications up to 57.6 kbps today. Therefore, 57.6 kbps is a good basis for network design considering the current signal controllers communicate at 1200 bps.

Communication Provisions

The communication protocols used by traffic signal controllers can be supported by a variety of communication media including fiber optics, twisted pair, wireless or a combination of the three. The City of Salem has established a policy of installing fiber optic cable to support all newly constructed signalized intersections. The communication design should provide for two fibers for each group of six controllers, connected in series. Limiting the number of signals in each group to six will allow for more than enough bandwidth to accommodate the additional overhead required for NTCIP protocols. If Ethernet communications are employed, the number of traffic signals assigned to a single group can be increased substantially, upwards of 20 signals per group, depending upon the physical media employed. Whereas wireline media can support over 20 signals per group, wireless communications are dependent upon the establishment of line-of-sight between all transmitter and receiver locations.

It may be advantageous for the City of Salem to reorganize their controller communications groups as fiber optic cable trunk lines are constructed. This measure could allow the City to reroute existing copper twisted pairs to communication hubs in order to ensure all signals have direct or indirect access to the fiber optic trunk line. Signals that are not on a current fiber path may be connected to this path using the existing twisted pair cable as required, or through wireless Ethernet networking where appropriate. In either case, fibers should be reserved in the main fiber ring to accommodate those additional signals in the future.

Detailed design should anticipate additional intersections that may be installed. Where additional signals are likely, the number of signalized intersections sharing a common channel should be reduced to allow for future signalized intersections.

The City of Salem has successfully connected serial-to-ethernet converters to their existing Type 170 controllers on a limited basis to support locations where traffic controller data and CCTV video is required. The potential exists to expand the Ethernet-over-Copper technology to other portions of the region. By installing a serial-to-ethernet converter, Ethernet switch and Ethernet-over-Copper Digital Subscriber Line Access Multiplexer (DSLAM) that can withstand the extreme environmental conditions found in the a typical traffic control cabinet, the existing copper twisted pairs can be used to provide broadband capabilities to the field and allow for successful deployment of higher bandwidth ITS field devices such as CCTV cameras prior to the installation of fiber optic cable.

5.3.1.2 Transit Signal Priority (TSP)/Emergency Vehicle Priority (EVP)

Transit signal priority is an ITS technology that extends the green phase of a traffic signal or truncates conflicting phases to turn on the green early to accommodate transit vehicles that are behind schedule. Emergency Vehicle Priority is an ITS technology that preempts the current phase of a traffic signal in order to provide a green signal to properly equipped emergency vehicles.

There are no TSP systems currently deployed in the Salem-Keizer area, however there are plans to deploy TSP on the major corridors in the region. The majority of the traffic signals in the Salem-Keizer Metropolitan Area have full emergency vehicle preemption capability using Opticom™. Fire vehicles have the capability to preempt traffic signals, but police vehicles do not. All of the new detectors and discriminators being installed have the ability to recognize vehicle identification codes and different levels of priority requests (e.g. bus priority). Many of the existing detectors and discriminators were installed prior to this functionality being offered. The City is actively pursuing opportunities to upgrade the existing detectors and discriminators to provide vehicle identification and low priority functionality.

City of Salem traffic engineers, using the 3M priority control software, have the ability to remotely upload the preemption logs to check for valid preempts. This allows for a back-check of the system to monitor for illegal preemption requests from after market emitters and to monitor the preemption activity.

Future Requirements

Most TSP and EVP systems use local communication between a roadside sensor and the traffic signal controller. The roadside sensor identifies the location of a transit or emergency vehicle within a particular zone and provides signal priority or preemption as required. The length of the zone is established through configuration of the detector on each leg of a traffic signal controlled intersection.

In some municipalities a more centralized monitoring approach has been used, where the locations of the transit vehicles are tracked, and the signal priorities are changed system-wide in response to the congestion experienced by these vehicles. Such systems require automatic vehicle location technology for transit vehicles with frequent communications (up to second-by-second) between the transit vehicles and the central transit system. They also require fast, reliable communication between the transit management system and the central traffic signal system and near-real-time communications to the traffic signals.

Communication Provisions

The most likely scenario for implementation of TSP, and communications from the transit vehicle to the traffic signal, is with a dedicated short range communication (DSRC) technology. This approach takes advantage of the existing Opticom™ deployed at the majority of intersections. DSRC will not affect the overall communication network design because it is deployed on an intersection by intersection basis.

Within the timeframe of this plan, the centralized approach to TSP may become a reality. This approach requires real-time (up to second-by-second) communications between the transit

vehicle and the transit management system, between the transit management system and the central traffic signal control system and between the traffic signal control system and the traffic signals. Wireless mesh or radio are the two most likely candidates for transmitting the vehicle location information. Center-to-center communications should be provided via fiber optic cable with redundant paths between centers. Traffic signal communications should be per the recommendations of the traffic signal section in this chapter.

5.3.1.3 CCTV Video

CCTV monitoring requires transmission of a video signal, as well as a data channel for camera control. Camera control, pan/tilt/zoom (PTZ) and focus, is carried on an RS-232, RS-422 or RS-485 data channel, which can be digitized in an internet protocol (IP) video stream or carried as a separate low speed data channel.

Current Requirements

Today, ODOT uses closed-circuit television (CCTV) cameras to monitor traffic at the Hayesville Interchange on Interstate 5. Two fixed mount cameras are provided at this site to provide images north and south of the interchange. From the NWTOC, operators also monitor the pan-tilt-zoom camera on the radio tower at the operations center, the security cameras in the building, and the mountain pass cameras. Two additional cameras on Interstate 5 are currently under design at the Kuebler Boulevard and Mission Street Interchanges. ODOT posts images from the existing cameras on the TripCheck website, which is described later in this chapter.

The City of Salem has video images at approximately one-third of the signalized intersections (approximately 60 intersections), which are supplied from the video detection cameras. These are all fixed mount cameras, but images are generally provided on the approach section of all four legs of an intersection. All new traffic signals in the City of Salem are installed with video detection.

Future Requirements

In addition to video detection cameras being installed at all new traffic signals, approximately twenty-nine PTZ CCTV deployment locations have been identified throughout the Salem-Keizer area. The analog video signals interfaced at a typical control center are shown in Figure 5-3. In recent years the quality of digital CCTV cameras that output a video data stream has approached a level that is comparable to traditional analog video signals.

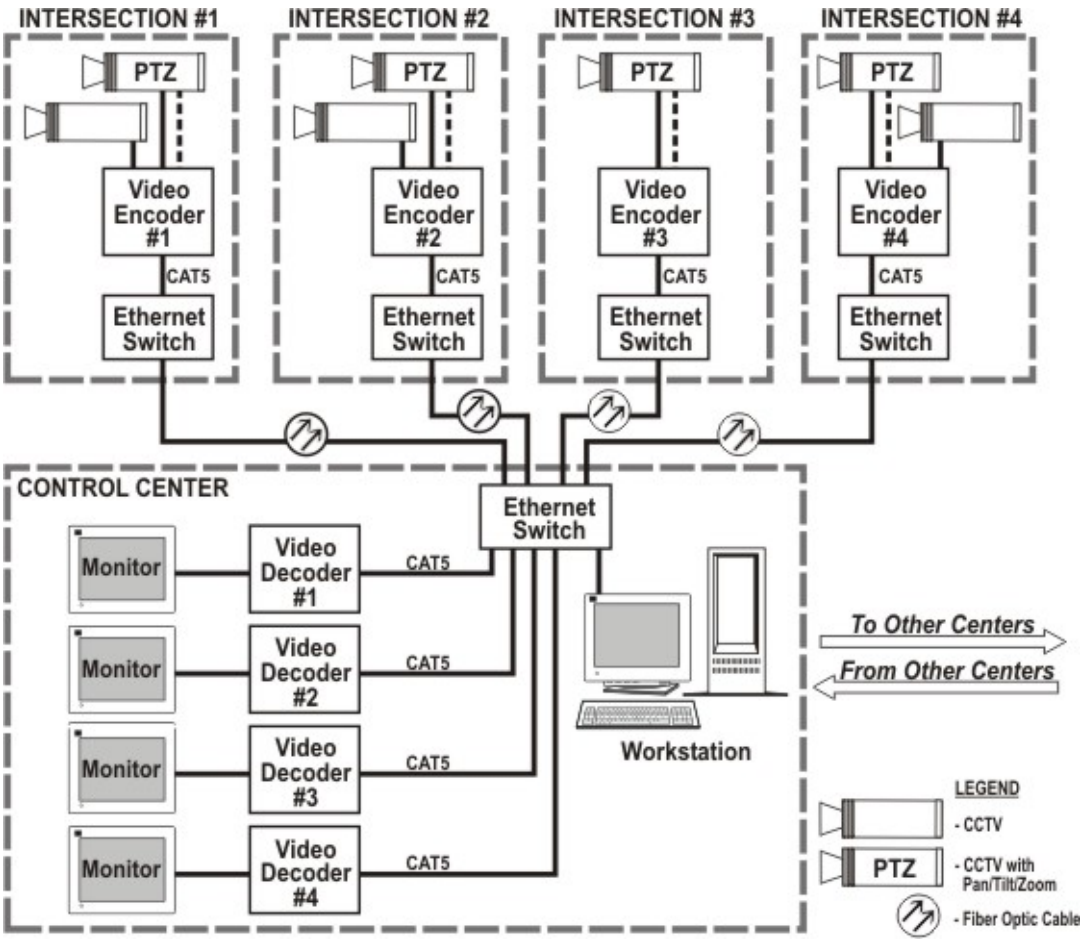

Figure 5-3. CCTV Video

Communication Provisions

CCTV video can be carried as an analog or digitized signal. The camera control channel can be transmitted as either serial data or be included in the UDP/IP data stream with the digital video.[2] There are several methods available to transmit the video, but digital IP video is recommended because it provides the most flexible network design for sharing video with other agencies and the Internet.

Analog transmission methods could initially be used for deployment of the communications network. However, as the number of ITS elements increases, digital transmission will become

[2] Transmission Control Protocol (TCP) is a protocol developed under contract from the U.S. Department of Defense to internetwork dissimilar systems. This is the protocol of the Internet and the global standard for communications. The TCP/IP suite provides two methods for data transport, TCP and User Datagram Protocol (UDP). TCP is used for everything that must arrive at its destination in perfect form while UDP is used in cases where reliable delivery is not required. There is less processing of UDP packets than there is for TCP. In particular UDP does not use a handshake protocol between origination point and destination point to start a session, it just sends out data packets. UDP is widely used for streaming audio and video, voice over IP (VoIP) and videoconferencing, because there is not time to retransmit erroneous or dropped packets.

more economical. This is because more digital channels can be added at a lower cost compared to analog systems. Also, connecting different field devices over a digital network over a digital network enables more flexibility for implementing automatic measures to route data traffic around network nodes experiencing hardware or software failures. This automatic failure recovery is referred to as fault tolerance.

If an analog video system were to be deployed, it would require some form of field aggregation of the video feeds within communication hubs. Otherwise, each field camera would require a single strand of fiber between the camera itself and the Traffic Management Center. Simply put, this is an inefficient use of the communications medium. Conversely if a digital video system were to be deployed in the Salem-Keizer area, the communications hub would still be required to function as an aggregation point however it would also serve the equally important role of providing fault tolerance in the event of unexpected network outages.

DKS recommends providing four fiber strands at every ITS field element location. The first pair of fiber strands would be used for an Ethernet link supporting the video encoding and camera control requirements. The second pair of fiber strands would be reserved for future requirements. Digital video encoders have improved their compression algorithms to a point where high quality video can be transmitted with as little as 1Mbps of bandwidth however for planning purposes, DKS recommends provisioning 8 Mbps of bandwidth for each CCTV camera.

5.3.1.4 Automatic Traffic Recorders

Automatic traffic recorders (ATR) are used to collect traffic volume, speed and occupancy data at a given location. These may utilize existing detection at a signalized intersection or be installed at a remote site with dedicated equipment.

Current Requirements

ODOT ATR's within the Salem-Keizer study area collect hourly volume data by lane. Three of the four ATR stations have the ability to collect speed and length data. Speed data is typically provided in 13 "Speed Bins" and length data is typically provided in two "Length Bins". ATR stations do not collect occupancy data.

Traffic volumes collected from these sites today provide 24-hour count data that provides changes in volume by time-of-day and by time-of-year.

Future Requirements

The deployment plan (Chapter 6) includes additional ATR deployments to monitor critical traffic congestion points and collect traffic volume and speed data for future planning and congestion information mapping. The majority of ATR deployments shown in the plan assume 24-hour volume information. However, automatic traffic recorders that utilize existing vehicle detection at traffic signals could be utilized to provide turn movement counts at signalized intersections. This would not affect the communications requirements, but would affect the data storage requirements.

Communication Provisions

The low data requirements of automatic traffic recorders can be supported with copper twisted pair, fiber optic cable, wireless or a dial-up phone line. Often these devices communicate directly with a traffic signal controller, and the fiber strands or copper pairs provisioned for a traffic signal controller will also support the automatic traffic recorders. In the case of a stand-alone automatic traffic recorder, the data could be connected to the Ethernet network if it is near a communications hub. For remote ATR's, leased dial-up phone lines are adequate.

5.3.1.5 Weather Stations (RWIS)

Weather stations, also called roadway weather information systems (RWIS), are used to collect and monitor weather and road conditions that are pertinent to motorists and to maintenance personnel responsible for the roadway operations. Typically weather stations collect temperature, wind speed, wind direction, precipitation, humidity and road surface temperature.

Current Requirements

Marion County currently operates and maintains three weather stations in Marion County at Drakes, Prospect Hill and Elkhorn. The weather information is accessible online at http://publicworks.co.marion.or.us/operations/weather/index.asp. ODOT has a weather station alongside River Road at the Traffic Signal Services Unit facility. The City of Keizer has a weather station at their City maintenance facility behind the Keizer Fire Station. Weather and road condition information collected from these sites generally includes air temperature, pavement temperature, wind speed, wind direction, barometric pressure, and humidity.

Future Requirements

Several additional RWIS locations have been identified as part of the deployment plan (Chapter 6).

Communication Provisions

The low data requirements of a typical RWIS station can be supported with either copper twisted pair or fiber optic cable. ODOT's RWIS stations support TCP/IP for Ethernet networks and serial line internet protocol (SLIP) for RS-232 serial data over 56 kbps dial-up. Both configurations can be converted to fiber. However, if CCTV cameras are desired at the weather station, then fiber optic cable is the recommended transmission medium. Specifically, two fiber strands are needed per RWIS location (one to support the RWIS and a spare for redundancy). In the event the proposed RWIS locations are remote and less than 10,000 feet from the fiber ring, then CCTV video and RWIS data could be transported over copper twisted pair using HDSL technology deployed as part of the ITS network. For locations farther than 10,000 feet from the fiber ring a leased line from a private sector telecommunication provider may be necessary.

5.3.1.6 Dynamic Message Signs (DMS)

A dynamic message sign (DMS) is an electronic sign used to post messages that are variable (any message) or changeable (one of several fixed messages). Traffic management personnel typically use DMS to provide information to motorists about changes in the local road conditions.

Current Requirements
Currently, there are no existing dynamic message signs within the Salem-Keizer Metropolitan Area. However, ODOT operates and maintains fixed dynamic message signs on Interstate 5 north of Salem. All new dynamic message signs installed by ODOT are compliant with the National Transportation Communications for ITS Protocol (NTCIP). Additional signs are controlled from the NWTOC, but are outside of this project study area.

Future Requirements
ODOT plans additional DMS on Interstate 5 southbound near the Brooks interchange and northbound north of Albany.and the deployment plan (Chapter 6) includes additional DMS's throughout the region. ODOT's new DMS installations are NTCIP compliant and user configurable for 56K dial-up and UDP/IP over Ethernet. Communication requirements are similar to the traffic signal controllers, and several signs may share a single serial data communication channel depending on device location.

Communication Provisions
DKS recommends providing four fiber strands at each DMS location (two to support the DMS unit and two for redundancy).

5.3.1.7 Highway Advisory Radio (HAR)

The purpose of HAR is to provide supplemental information to motorists about traffic advisories, construction and maintenance operations, adverse weather or environmental conditions, route diversions and special events. HAR uses low-power roadside transmitters that operate in AM or FM frequencies licensed by the Federal Communications Commission (FCC). The typical operating range on a HAR transmitter is two miles although ODOT has achieved ranges of up to eighteen miles in some instances. HAR is not intended to replace required permanent signs or temporary signs used for construction or maintenance operations. Local agencies wishing to establish a HAR site must apply to the Oregon State Traffic Engineer. Following approval by the state, the HAR owner subsequently applies to the FCC for permission to operate in the AM or FM frequency spectrum.

ODOT HAR transmitters are equipped with an Ethernet port, so when fiber optic cable is available these sites will be able to communicate with the Traffic Operations Centers using Ethernet communications protocols. Currently all ODOT HAR sites are remotely accessed via leased telephone lines and communicate using Dual Tone Multi-Frequency (DTMF) and voice.[3]

Current Requirements
There is no existing HAR in the project area.

[3] Dual Tone Multi-Frequency (DTMF), the system used by touch-tone telephones. DTMF assigns a specific frequency (consisting of two separate tones) to each key so that it can easily be identified by a microprocessor. In the case of HAR, the microprocessor is located within the HAR transmitter.

Future Requirements
Additional HAR sites are planned by ODOT to provide additional travel advisory information in advance of key interchanges. The deployment plan (Chapter 6) includes additional detail about this project.

Communication Provisions
HAR systems are currently being introduced to the market that will allow traffic management personnel to alter or replace HAR broadcast messages remotely from a traffic management center or other remote location using TCP/IP protocols. DKS Associates recommends provisioning four fiber strands per HAR location to support this capability (two for the HAR station and two for redundancy). If the HAR site is remote, a leased phone line is adequate.

5.3.2 Transit Subsystems

A number of systems are available for "next bus arrival", providing time and/or routing information to transit riders for the next bus to arrive. Many of these systems operate using wireless technologies, but they could also use the wireline communication network if it is available. It is also possible that at strategic points in the region, there will be communication links to the transit vehicles. Although the final link to the vehicle would use wireless technology, the communication backbone would support the link between the wireless antenna site and the control center.

Current Requirements
There are limited current requirements for transit communications. Security video at the transit management center is viewable at the security center and at the Dellweb maintenance facility. Communications between the transit center and the maintenance facility support several business network needs. The link between the transit center and the maintenance facility is being implemented with a transit agency owned wireless network.

Future Requirements
Potentially two new transit centers could be constructed during the life of this plan (one in the Keizer Station vicinity and one in south Salem). The transit agency will require security video at these sites and communications infrastructure to support the distribution of this video to the transit management and maintenance centers. In the Summer of 2005, Cherriots is deploying mobile data terminals on paratransit vehicles and implementing a pilot project to provide "next bus" arrival information on a few routes. Both deployments are planned to be supported by wireless communications.

Communication Provisions
Communications to the planned transit centers should be considered in long term planning of the Salem-Keizer communication network. Actual sites for these centers have not been selected at the time of this print, but general locations are known. Spare fibers and access points should be considered during detailed design of communications infrastructure.

Four fibers should be allocated for future transit links to transit centers and from field hubs to support roadside signs of future wireless communications to vehicles.

5.3.3 Center-to-Center Requirements

A key element of a regional ITS operation is the use of center-to-center links to support the sharing of video and data, and in some cases allow for the complete control of another operations center from a backup location. Center-to-center communications should be provided between a variety of locations including transportation management centers, transportation maintenance centers, emergency operations centers (EOC's), transit management centers and 911 centers. The following centers in the Salem-Keizer Metropolitan Area should be interconnected:

- Northwest Transportation Operations Center (ODOT)
- City of Salem Traffic Operations Center
- Marion County Public Works
- City of Keizer Public Works
- Polk County Public Works
- Cherriots Transit Management Center
- Mid-Willamette Valley Council of Governments
- Willamette Valley Communications Center
- City of Salem Police Department
- City of Keizer Police Department
- City of Salem Fire Department
- City of Keizer Fire Department
- Polk County Sheriff's Department
- Marion County Sheriff's Department

Future Requirements

Although there are no plans to develop formal transportation operations centers other than the existing Northwest Transportation Operations Center in downtown Salem, other agency locations should be considered as centers and served with appropriate center-to-center communication links because the information sharing requirements will be the same. Agencies without the physical space designated to a TOC will utilize workstations to provide similar functionality (viewing video, processing information and responding accordingly). Existing and planned centers and their potential needs for a communications link are summarized in Table 5-2

Table 5-2. Center to Center Links

Centers	Purpose	Type of Link
City of Salem and ODOT NWTOC	Allow shared monitoring of cameras and control of traffic signals during incidents.	Ethernet
Transit Management Center and Traffic Management Centers	Share bus location information for vehicle probe project. Share video. Support centralized management of TSP.	Ethernet
Traffic Management Centers and 911 Center	Allow sharing of information during emergency situations. Allow video monitoring and traffic congestion information	Data and video on Ethernet. Voice communications for backup
Traffic Management Centers and Emergency Operations Centers	Allow sharing of traffic condition information (video and data) during emergency situations	Ethernet

Communication links throughout the network, including Center-to-Center and Center-to-Field links, should conform to National Transportation Communications for ITS Protocol (NTCIP) standards. NTCIP is a family of standards that provides both the rules for communicating (called protocols) and the vocabulary (called objects) necessary to allow electronic traffic control equipment from different manufacturers to operate with each other. The NTCIP Standards Framework is divided into five levels – Information, Application, Transport, Subnetwork and Plant. In addition to defining the data protocols and objects common to the ITS industry, the five NTCIP levels incorporate the seven layers of the Open System Interconnection (OSI) model used to standardize the protocols included in networking equipment found in the Information Technology industry. A brief description of each NTCIP level is provided below.

- Information Level – Information standards define the meaning of data and messages and generally deal with transportation related data as opposed to data concerning the communications network. This level is not part of the OSI model.
- Application Level – Application standards define the rules and procedures for exchanging information data. The rules may include definitions of proper grammar and syntax of a single statement, as well as the sequence of allowed statements. Protocols found in this level include FTP, SNMP and STMP. These standards are roughly equivalent to the Session, Presentation and Application layers of the OSI model.
- Transport Level – Transport standards define the rules and procedures for exchanging the Application data between point "A' and point "X" on the network, including any necessary routing, message assembly/disassembly and network management functions. Protocols found in this level include TCP/IP, and UDP/IP. These standards are roughly equivalent to the Transport and Network layers of the OSI model.
- Subnetwork Level – Subnetwork standards define the rules and procedures for exchanging data between two adjacent devices over some communications media. Protocols found in this level include ATM, Ethernet, SONET, PMPP and PPP. These standards are roughly equivalent to the Data Link and Physical layers of the OSI model.
- Plant Level –The plant level includes the communication infrastructure over which NTCIP communications standards are to be used. Physical media included in this level includes fiber optic cable, coaxial cable, copper twisted pair cable, and wireless communications.

Communication Provisions

During detailed design, the exact communications provisions between centers should be determined. Fiber optic cable and wireless communications are the most viable candidates. If fiber optic cable is selected for a particular center-to-center link, then six fibers should be included in the main fiber runs to accommodate each center-to-center link. If wireless communications is selected for a particular center-to-center link, then a FCC licensed frequency band capable of supporting broadband bandwidth over given distance is recommended.

5.4 Communication Network Architecture

In order to select a network architecture that is best suited to the needs of the region, it is important to consider the available options. This section describes the possible configurations and communication protocols at a higher level, including brief consideration of the strengths and weaknesses of each option. A typical communication network is divided into the following three basic elements, as shown in Figure 5-4. Communication Network Elements

- **Backbone**: The communication backbone is capable of carrying all types of the data traffic in the system. The backbone interconnects a number of nodes, which are central locations where the information can be inserted onto or removed from the backbone.
- **Distribution**: The distribution portion of the network provides a connection between the backbone node and a group of ITS devices or buildings. In the case of fiber optic cable, the distribution portion typically has fewer fiber strands compared to backbone portions. Distribution electronics are commonly collocated with the backbone node equipment in a communication hub.[4]
- **Local**: The local portion of the network or "drop" that connects an end device or building to a distribution cable or directly to a node on a backbone. For fiber optic networks, local portions typically have fewer fiber strands compared to distribution portions. For example, a hypothetical ITS network could have a 96 strand fiber backbone with 12 strand distribution cables that allocate two fiber strands for each traffic controller cabinet.

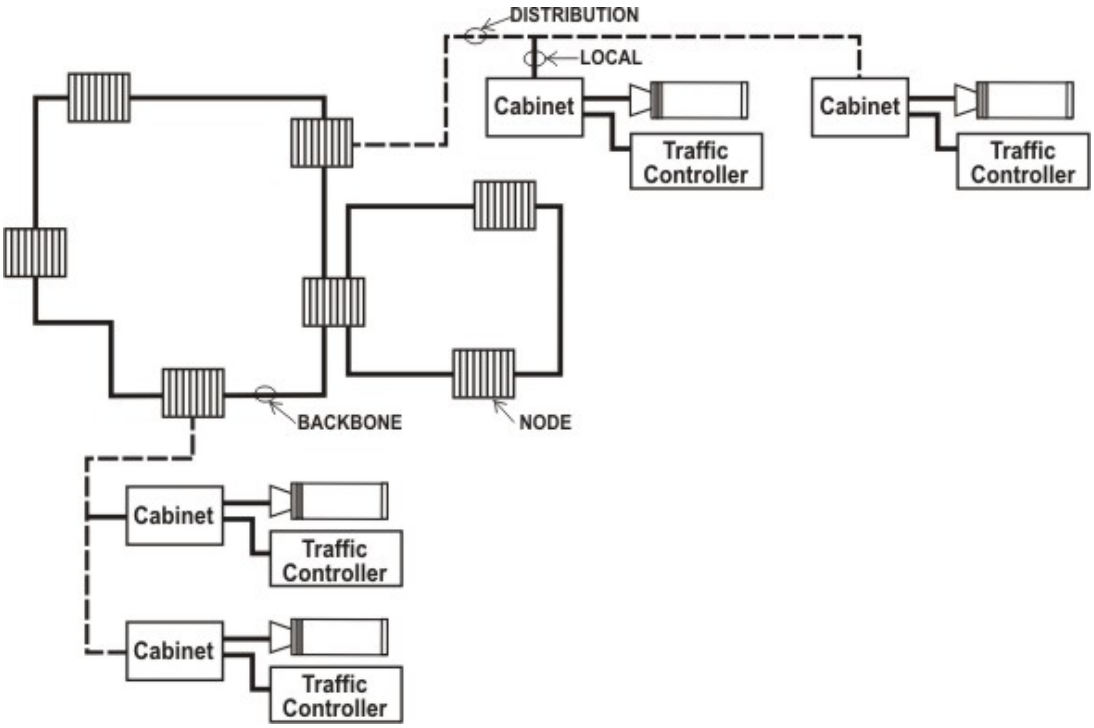

Figure 5-4. Communication Network Elements

[4] For the purposes of this document, the terms node and hub may be considered interchangeable.

The network must be designed to support data and video requirements to a wide variety of locations throughout the region. With particular types of communication equipment the video can also be converted to a data stream and carried on a common transmission medium, but for planning purposes it is typically more flexible to consider two independent networks:

- **Data:** The communication network to carry the data signals will consist of a high-speed backbone and local distribution that will feed the individual signals to the backbone.
- **Video**: The video network will carry single video channels and multi-channel video signals, generally to a control center. Single channel video will typically be carried in the distribution network, and video on the backbone usually combines a number of video signals into one multi-channel video signal.

There are a number of aspects of any network architecture that need to be considered:

- **Communication Technology Options – Plant Level:** At the outside plant level, the network architecture considers the links between elements in the network. There are a number of technologies that can be used to connect locations on the network, either cables or wireless links.
- **Physical Topologies:** The devices, centers and other facilities on a communication network can be connected in a number of different physical configurations or topologies, including star, ring, and/or mesh networks.
- **Backbone Communications Technology Options – Sub-network Level:** A key aspect of the network architecture is the type of transmission system used in the backbone to interconnect network nodes. Examples include ATM, SONET and Gigabit Ethernet (GigE) technologies. In newly constructed networks generally a single backbone transmission system is selected for the entire network.
- **Distribution Communication Technology Options – Sub-network Level:** There are a number of communication technologies that should be supported by the architecture for distribution systems such as Ethernet, RS-232/485, or propriety. Although it reduces complexity to minimize the number of distribution technologies, it is better not to design physical facilities that limit the use of a wide range of technologies.

5.4.1 Communication Technology Options – Plant Level

The plant level considers the physical plant used to interconnect points on the network. In traditional networks this would include the cable (fiber or twisted pair) between devices, but in recent years, the introduction of wireless technologies has also allowed wireless equipment to provide a plant level link. This section summarizes plant level options.

Twisted Pair

Twisted pair cable was the original physical plant used for communication networks. The widespread use of this technology by the telephone companies has resulted in robust cables that require little maintenance when installed correctly.

The most significant drawback of twisted pair plant is the narrow bandwidth it can provide. In recent years this disadvantage has been addressed through the use of Digital Subscriber Line (DSL) technology. There are two types of DSL service commonly deployed in the field –

Asymmetric Digital Subscriber Line (ADSL) and High Bit-rate Digital Subscriber Line (HDSL). ADSL is the most popular form of xDSL technology. The key to ADSL is that upstream and downstream bandwidth is asymmetric, or uneven. In practice, the bandwidth from the provider to the user (downstream) will be the higher speed path. This is in part due to the network provider's desire to accommodate the typical Internet usage pattern where the majority of data is being sent to the user (programs, graphics, sounds and video) with minimal upload capacity required (keystrokes and mouse clicks). ADSL downstream speeds typically range from 768 Kb/s to 9 Mb/s. Upstream speeds typically range from 64Kb/s to 1.5Mb/s although most deployments tend to be towards the lower end of this spectrum. ADSL's upstream data rate is typically not high enough to support full motion video transmissions and is therefore not recommended for use in the City's ITS program.

HDSL delivers 1.544 MBPS of bandwidth in each direction over two copper twisted pairs. Because HDSL provides the equivalent of T1 speed, telephone companies have been using HDSL to provision local access to T1 services whenever possible.[5] The operating range of HDSL is limited to 12,000 feet (3657.6 meters) without the use of signal repeaters.
A third type of Digital Subscriber Line technology has recently gained attention in the United States call SHDSL. Symmetric High Bit-rate Digital Subscriber Line (SHDSL) is the first standardized multi-rate symmetric DSL and is a product of the International Telecommunications Union – Telecommunications (ITU-T) standards body. SHDSL is designed to transport rate-adaptive symmetrical data across a single copper pair at data rates of 192 Kbps to a range of 20,000 feet or 2.3 Mbps to a range of 10,000 feet.

SHDSL equipment has recently been introduced to the ITS market which provides up to 9.2 Mbps of bandwidth using Ethernet communications protocols to a distance of 9,500 feet using two pair of 24 AWG copper twisted cable.[6] This is sufficient to support broadband ITS field devices such as CCTV cameras. If more copper pairs are available, then the distance and bandwidth capacities increase significantly. Using the example of the 24 AWG copper twisted cable, increasing the number of pair from two to four provides 14.2 Mbps of bandwidth at 9,500 feet. Increasing the copper twisted pair from four to eight provides 27.2 Mbps of bandwidth at 9,500 feet.

The Salem-Keizer area has a significant copper twisted pair network in place. In particular, the City of Salem has a good quality twisted pair network that operates the vast majority of the traffic signal system. In many cases it may be feasible to deploy Ethernet-over-Copper equipment on an interim basis in order to support high bandwidth ITS field devices until fiber optic cable is installed.

---

[5] Other HDSL applications include Private Branch Exchange (PBX) network connections, digital loop carrier systems, interexchange Point-of-Presence (POP) connections for internet/intranet access, internet servers, and private data networks.

[6] In February and March 2005 DKS Associates conducted a 60 day field trial in Livermore CA comparing the SHDSL equipment manufactured by Tut Systems and Actelis Networks. Tut Systems provided performance data showing 9.2 Mbps to a range of 9,500 feet using two pair of 24AWG copper cable. Actelis Networks provided performance data showing 7.2 Mbps to a range of 9,500 feet using two pair of 24 AWG copper cable. Actual field observations obtained during the field trial were in line with the performance statistics advertised by each manufacturer.

Coaxial Cable
Coaxial cables were introduced to provide increased bandwidth and are still widely used to carry broadband video services by the cable television industry. In intelligent transportation systems they are used typically to make video connections where the cable is 500 feet or less in length, which does not require any transmission equipment.

Although coaxial cables can be used to transport video images for greater distances, the transmission of unmodulated analog video signals (i.e. baseband) required in ITS networks is carried more efficiently on fiber optic cable.

Fiber
Fiber optic cable has become the preferred choice of physical plant installations for ITS networks. Fiber optic systems can carry very large bandwidth on a single fiber, and cost effective transmission systems are available for CCTV video signals. Fiber has the advantage of low signal loss, allowing signals to be carried large distances without repeaters. Equipment is available that can carry a signal with any of the protocols described in this document between any two points in the region without repeaters. In recent years the cost of fiber optic cable has decreased, and it costs far less than a twisted pair of equivalent capacity.

Wireless
As the road allowances have become increasingly congested with cable plant, wireless systems have increased in suitability. Recent developments are making these systems more cost effective and increasing the bandwidth that they can carry.

Many options exist for low speed systems that do not require FCC licensing to operate. These systems typically operate in the 900MHz, 2.4GHz and most recently 5.8GHz frequency bands and employ Frequency Hopping Spread Spectrum techniques where the transmitter and receiver rapidly switch frequencies that allow other users to occupy the same frequency band without interference.[7] While license free systems frequently offer a relatively inexpensive and simplified deployment compared to licensed frequency systems, the popularity of the license free frequency band has saturated the 900 MHz and 2.4GHz bands. In the last few years significant research and development efforts have been made by telecommunication equipment manufacturers to provide wireless broadband access over licensed and license-free frequencies. This effort has intensified with the issuance of the IEEE 802.16, which addressed standards for manufacturing Ethernet compliant wireless metropolitan area networking devices.

[7] Spread Spectrum is a data transmission modulation technique by which the transmitted signal is spread over a bandwidth wider than the information bandwidth. Spread Spectrum radio communications was developed originally used by the military because the radiated signals are distributed over a wider range of frequencies and then collected onto their original frequency at the receiver making them difficult to jam or intercept. Spread Spectrum frequency bands are designated by the FCC and require no user license. Currently three license free Spread Spectrum frequency bands have been assigned by the FCC – 902 MHz to 928 MHz, 2.4 GHz to 2.4835 GHz and 5.725 GHz to 5.85 GHz. There are two Spread Spectrum transmission techniques – Frequency Hopping and Direct Sequence. Frequency Hopping Spread Spectrum is a technique by which the frequency band is divided into a number of channels and the transmission hops from channel to channel in a pre-specified sequence. Direct Sequence Spread Spectrum is a technique by which the transmitted signal is spread over a particular frequency range.

When compared to the high cost of cable installation, wireless systems are a viable option. Based on our DKS Associates' experience in designing both fiber optic CCTV systems and wireless CCTV systems, constructing fiber optic cable systems typically costs ten times more than a similar system using wireless communications. In the short term, it is expected that wireless systems can provide the greatest cost benefit for low speed links in congested areas, and could be considered for short haul communication to ITS devices. However in the mid to long term, equipment conforming to IEEE 802.16 will become more prevalent, resulting in high bandwidth ITS field devices being supported with license-free wireless communications.

Leased Lines

Another plant level option is to lease communication services from a third party. Leased links require ongoing monthly charges, but do not require a large capital outlay for installation. They are often used effectively to serve remote devices where it would be too costly to install a dedicated cable.

As a point of reference, a leased 56K Frame Relay connection can often cost between $200/month and $300/month, while a T-1 line can often run anywhere from $500/month to over a $1,000/month. A DS-3 typically costs approximately 10 times more than a T-1 line. However, these costs can vary drastically from region to region and between service providers, and should be verified during detailed design.

Leased Fiber

Fiber can be leased from telecommunication providers in the region. Unused fibers contained in cables owned by the private sector telecommunications provider can be segregated and leased exclusively for ITS use.

Although leased fibers incur monthly charges ranging from $300/month to $1,000/month depending on the location and distance, they provide the full benefit of the fiber optic cable without the capital construction costs. Utilization of leased fiber may be particularly advantageous for phased network implementation, with the leased segments being replaced by new construction as network deployment proceeds.

5.4.2 Physical Topologies

There are a number of physical topologies that can be used to interconnect locations on a communication network. This section introduces some example network topologies, including star, ring, mesh, and hybrid.

Star

Star configurations refer to a topology where each device has one connection to a central point as shown in Figure 5-5. Also called a "home run," these links provide the sole communication path from the device to any other point in the network. This approach is often used in distribution networks, where each device has a single channel back to a node on the backbone. Local links are typically star configurations, as well, between the distribution cable and the end device.

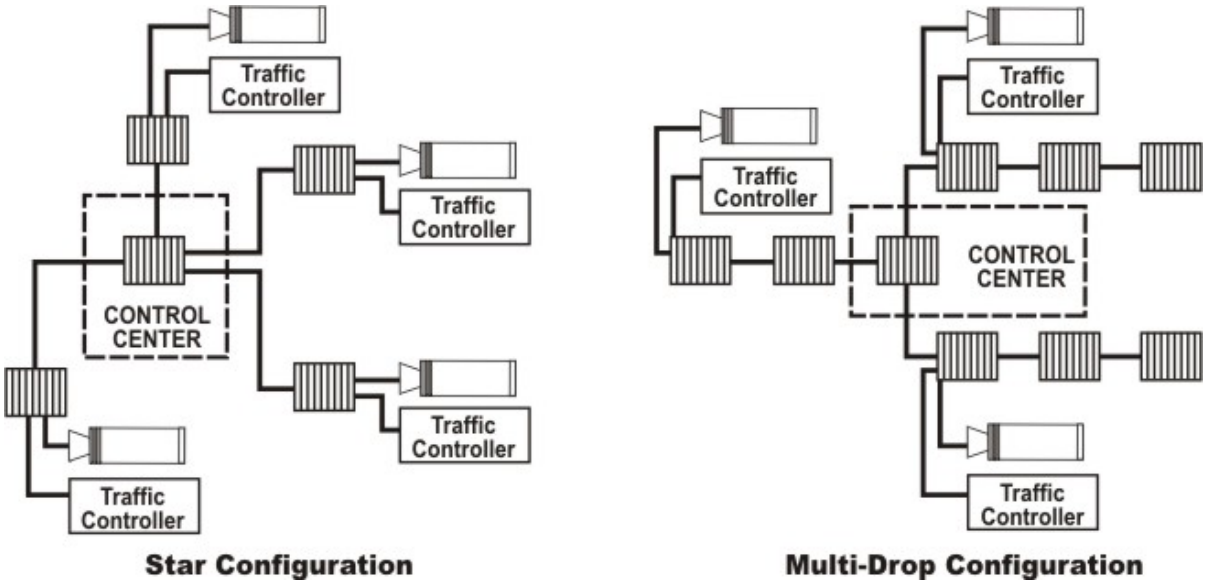

Figure 5-5. Generic Star and Multi-Drop Configuration

With some systems, more than one device can share a channel. If these devices are served in series (as illustrated in Figure 5-5) they can be called a multi-dropped star, where a number of devices share one communication path.

The main advantage of this topology is it allows for the greatest control of the network since all circuits are connected to a central location. In addition, star topologies tend to provide the fastest performance since all nodes are connected to the central location. Disadvantages of the configuration include more susceptibility to disruptions due to link failures, e.g. cable severed in the field, and a more extensive communications infrastructure for point-to-point links.

Ring

Ring configurations connect a number of devices or locations in a ring. This approach is often used in backbone networks that connect a number of nodes together as shown in Figure 5-4. Each node has two connections: primary and secondary. In this configuration illustrated in Figure 5-6, the failure of a single communication path or a single node allows the remainder of the devices to communicate without interruption. The use of rings in distribution networks is also possible, although there are a fewer number of types of distribution electronics available to do this.

Fault tolerance is accomplished through the use of the Spanning Tree Protocol (IEEE 802.1d) or Rapid Spanning Tree Protocol (IEEE 802.1w), protocols designed for looped Ethernet networks. Since Ethernet has traditionally been found in a star or a bus network, it was not originally designed to be a ring network. This worked well in a local area network environment, primarily when a broadcast message was sent, since a broadcast message was received by each connected device from only one link, or path. With a ring or meshed network, a connected device could receive and forward the same broadcast message from multiple links or paths. In some instances the forwarding of identical messages elicits even more messages and subsequent forwarding from other devices. This process eventually “snowballs” into a broadcast storm. A severe broadcast storm can block all other network traffic. Broadcast storms can usually be prevented

from other devices. This process eventually "snowballs" into a broadcast storm. A severe broadcast storm can block all other network traffic. Broadcast storms can usually be prevented by carefully configuring a network to block redundant links, thus preventing loops in the network and avoiding broadcast storms. The Spanning Tree Protocol is primarily utilized to prevent "broadcast storms" in multiple path networks. Based on a "Root Switch", the protocol continuously monitors all links on the network and automatically re-routes traffic in the event one link or several links fail.

In order to employ Spanning Tree Protocols while maintaining the ability to deploy Ethernet switching products from multiple manufacturers, DKS recommends employing Ethernet switching equipment that fully complies with IEEE 802.1d or IEEE 802.1w standards and does not utilize proprietary Spanning Tree algorithms. In order to minimize the fault recovery times to as little as 5 milliseconds and support up to 80 Ethernet switches in a single ring, compared with IEEE 802.1d/IEEE 802.1w fault recovery times that approach 60 seconds on rings supporting up to 31 Ethernet switches, many Ethernet switching manufacturers have developed proprietary Spanning Tree Protocols that do not conform to IEEE standards. However in order to take advantage of these features, then Ethernet switching equipment from a single manufacturer is required.

The chief advantage of this topology is in the area of fault tolerance. Since communications are not focused entirely on one location. Another advantage of a ring topology is geographic coverage. In most cases the data transmission present at each network nodes regenerates the received signal which allows for a wider geographic coverage of the network. The primary disadvantage of a ring topology is the whole network can be impacted by a cable cut is the primary and secondary loops occupy the same conduit bank.

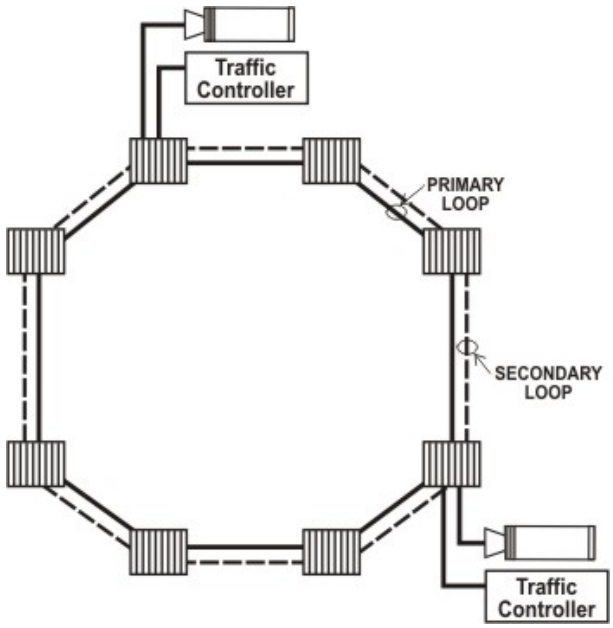

Figure 5-6. Generic Ring Configuration

Mesh

In some backbone technologies, particularly TCP/IP, the equipment can accept many different connections (instead of just primary and secondary), and the firmware on the communication equipment can select the routing of the traffic between any two points on the network (as compared to the ring where the hardware determines the routing). With this capability, a mesh configuration can be established where any number of connections may exist between any two points in the network, as shown in Figure 5-7.

This configuration can provide multiple redundant paths, and allows the system to balance traffic between the nodes in real time. It also provides increased flexibility and growth options for the network. This configuration also provides advantages in a system where there are multiple control points. The virtual traffic management center (TMC) concept, where ITS operations are conducted and monitored from multiple ad-hoc locations, would be well supported by this configuration. The disadvantage of this topology is complexity. Mesh networks require a high level of technical expertise to manage effectively.

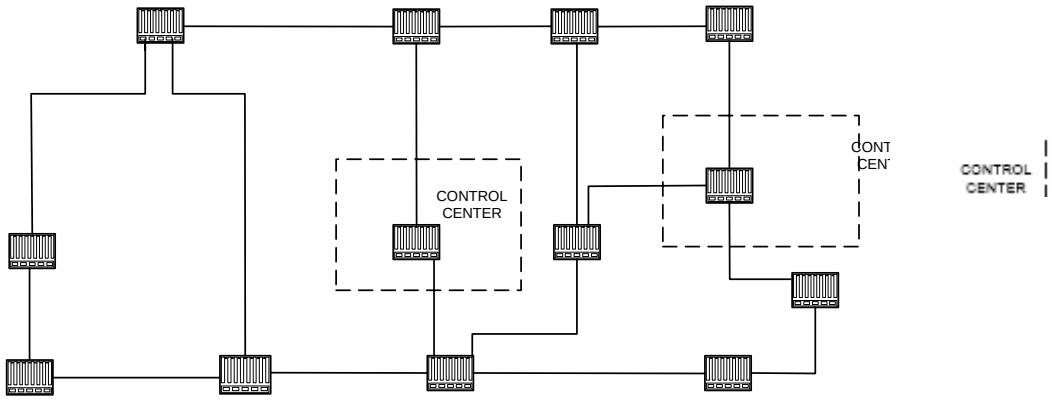

Figure 5-7. Generic Mesh Configuration

Hybrid

A hybrid network combines one or more of the previously discussed technologies into a single network. The most common topology is a hybrid with a star distribution network and a mesh or ring backbone. Hybrids combine the advantages of ring and star topologies to provide relatively high performance with an increased level of redundancy.

A hybrid approach is also typically used in backbones where a ring or mesh has a node that is connected by a spur in a star configuration as shown Figure 5-8. In this case the node on the spur has access to the backbone bandwidth, but does have the redundancy that a node on the ring or mesh would have. This configuration also provides advantages in a system where there are multiple control points. The virtual TMC concept would also be well supported by this configuration.

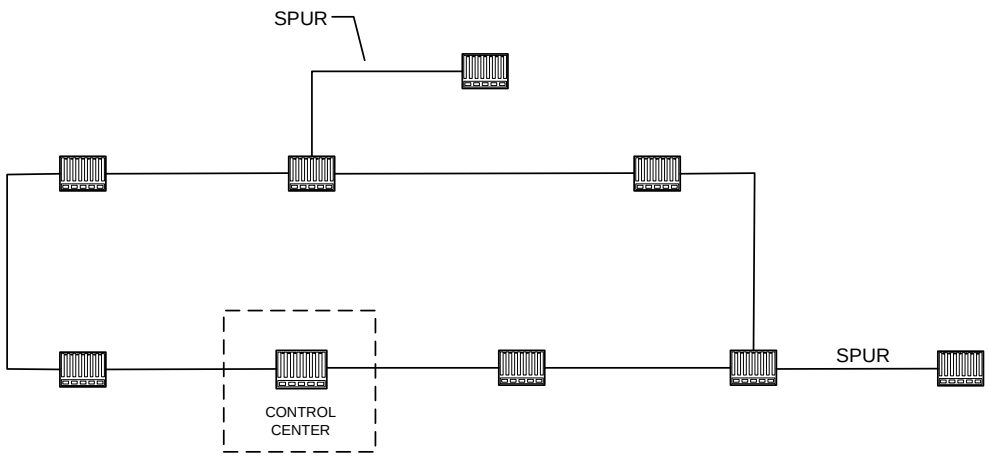

Figure 5-8. Generic Hybrid Configuration

Another hybrid network is a redundant star as shown in Figure 5-9. In this configuration, each device is connected in a star configuration, but two channels are provided to make the connection. The two channels are contained in the same transmission media, providing redundancy should the electronics on one of the end points fail. Since the communication path is common, however, this does not provide any redundancy to communication path failures such as cable cuts.

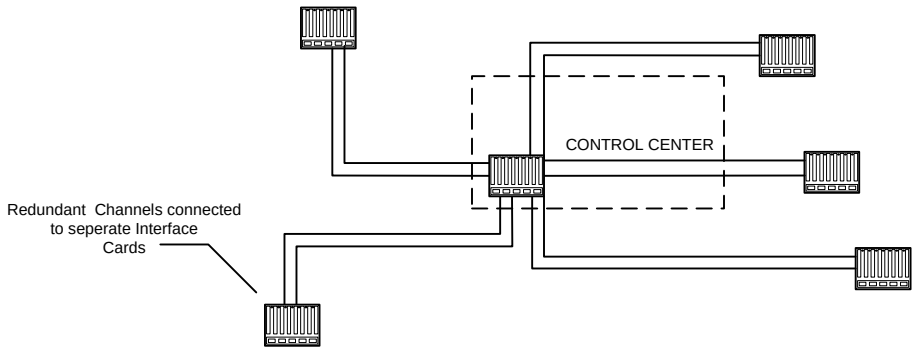

Figure 5-9. Generic Redundant Star Configuration

5.4.3 Backbone Communication Technology Options

The most significant decision in the design of the communication network is the selection of the data backbone technology. The selection must consider the current needs, industry standards, and the developing standards.

At this time there are only three technologies that are widely used, which also have a well established base of standards: ATM, SONET and Gigabit Ethernet. Other backbone systems exist, but they either do not have a full range of accepted standards, or there is not a variety of vendors providing interoperable equipment.

Asynchronous Transfer Mode (ATM)
Asynchronous Transfer Mode (ATM) backbones saw their greatest growth prior to the introduction of 100 and 1,000 Mbps Ethernet transmission. This equipment provided high speed connectivity and easily supported TCP/IP (Ethernet) transmission, making it a popular candidate for use in networks that had a high volume of TCP/IP traffic. The equipment provided routing and supported mesh configurations. ATM also provided the first variable bit rate solutions for transmission of video signals.

With the improvement of speeds provided on Ethernet equipment and new advances in digital video, the implementation of new ATM networks has virtually stopped. With the advent of Gigabit Ethernet (1,000 Mbps), TCP/IP traffic no longer requires conversion to ATM protocols for transmission at higher speeds. The most common digital video transmission protocols are also now based on TCP/IP protocol.

Synchronous Optical Network (SONET)
SONET technology is the traditional choice of telecommunication providers, for whom voice transmission makes up the majority of the traffic. The highly reliable system is based on the provision of established channels that are constantly open between each end point in the system.

The standards for SONET are firmly established and widely followed, and provide for the transport of serial data streams of 1.544 Mbps (T-1) or higher in a number of protocols. Data services operating at lower speeds or different protocols can be accommodated by adding communication components connected to the SONET network. Transmission equipment supporting pure implementations of SONET is interoperable between vendors.

SONET standards do not provide for Ethernet connections or data channels with lower speeds than 1.544 Mbps. Some vendors do provide multiplexers that will accept these protocols and transport them using SONET protocols and data rates, but these products are not “pure” SONET, and are not interoperable between vendors because each multiplexer must communicate with another multiplexer made by the same vendor.

An implementation of SONET in the backbone network for the region that would support TCP/IP (Ethernet) and low speed data would require routers at every node to convert the Ethernet signals into data channels that can be carried by SONET. It would also require multiplexers to combine the low speed data channels for ITS applications into a T-1 signal that can be carried by the SONET multiplexer. These additions require a number of other components as shown in Figure 5-10 resulting in a very complicated network, increasing capital cost and complexity in network maintenance.

The inherent requirement for SONET to assign all channels in a permanent manner can make the system inefficient, unless the transmission requirements are continuous and consistent, and the switching is done outside the backbone network. This is the case in a traditional telecommunication network.

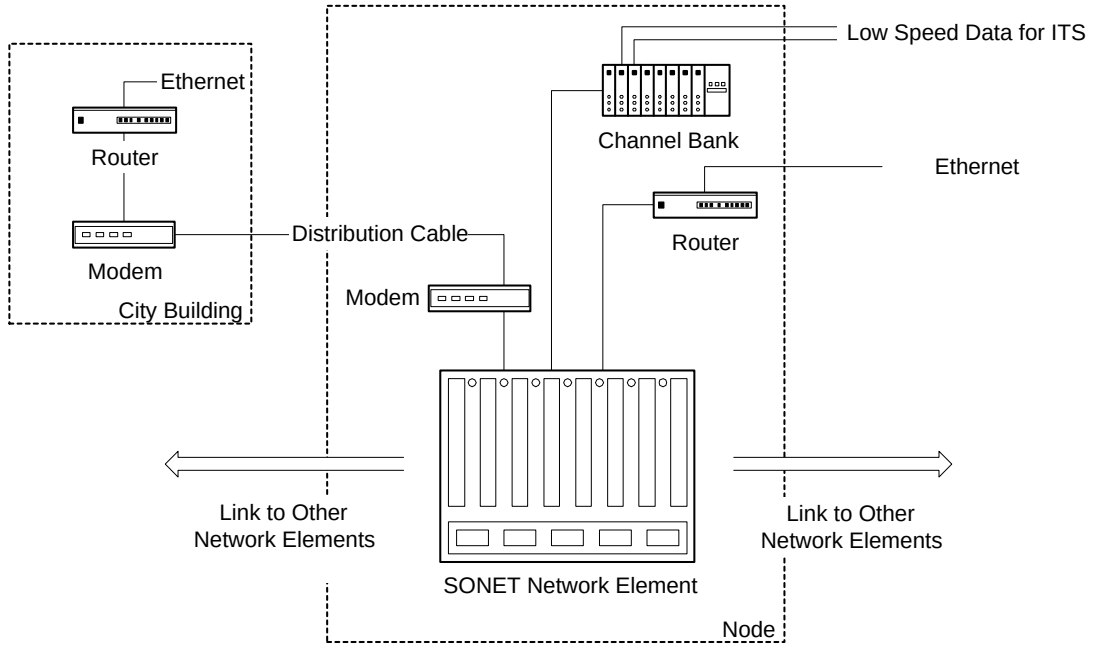

Figure 5-10. Required Equipment for SONET Backbone

Ethernet Family

A third network architecture that is increasing in use as the backbone in ITS networks is based on Ethernet. Although invented in 1976, Ethernet has evolved over time to support larger bandwidths of over 1000 Mbps. While Gigabit Ethernet (GigE) with bandwidth of 1000 Mbps is beginning to be deployed for ITS applications today, research is underway for higher bandwidth Ethernet switches that will support up to 10 Gbps. The increased bandwidth is achieved by continuously refining the Dense Wavelength Division Multiplexing (DWDM) algorithms programmed into the Ethernet switches. DWDM works by combining and transmitting multiple signals simultaneously at different wavelengths on the same fiber. In effect, one fiber is transformed into multiple virtual fibers. The increased speeds are achieved by increasing the number of available wavelengths on a single fiber strand. More available wavelengths contribute to more avenues for the data to get from point "A" to point "B" thereby increasing the overall performance of the Ethernet switch. Given the continued investment into Ethernet by the networking industry, it is reasonable to believe that the Salem-Keizer ITS network may deploy Ethernet equipment that is capable of well over 10 Gbps during the network's lifetime. Standard TCP/IP protocols are used throughout the network, and the components are widely available and interoperable between vendors.

Ethernet provides a number of advantages:

- Based on established standards.
- Provides direct TCP/IP connectivity for center-to-center connectivity.
- Allows a standard IP addressing scheme, and subnetting.
- Supports Virtual Private Networking (VPN).
- Maintains the simple communication configuration.
- Supported by standard Network Interface Cards (NIC) and drivers, allowing direct

connection to the backbone.

- Equipment is interoperable between a number of vendors, and compatible with the equipment and systems installed in the region's facilities.
- The extensive use of Ethernet in communication networks worldwide ensures that it will continue in the future.

Under an Ethernet configuration, a serial hub or terminal server device provides the low speed EIA/TIA 232 communication for existing ITS devices using EIA/TIA 232 communication, but this provides flexibility by allowing each port to be addressed with an IP address. Many new ITS devices may be procured with the Ethernet protocol in place of RS-232/422/485 and no serial hub or terminal server device is required. The routers are not required to convert the Ethernet traffic to other protocols for transport. The equipment at a node is greatly simplified as shown in Figure 5-11.

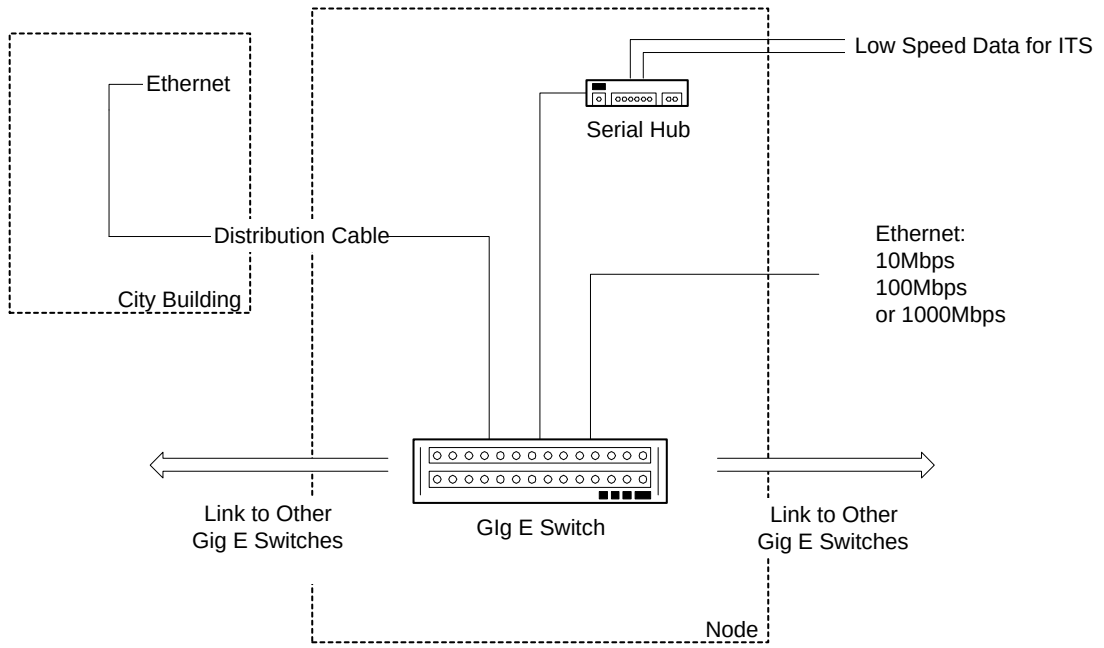

Figure 5-11. Required Equipment for Gigabit Ethernet Communication

5.4.4 Distribution Communication Technology Options

The options for communication in the distribution network are driven mainly by the communication protocol used by the ITS device. Most distribution networks support these protocols directly; however, some distribution systems convert signals in a number of protocols into a common channel that can be easily carried on the backbone network.

RS-232/422/485

The traditional low speed protocol used by ITS devices is RS-232. This protocol is still widely used, and is one of the two low speed protocols recognized by NTCIP as a standard. RS-422 and RS-485 are similar protocols, and are often found in the circuits used for camera control. These all provide low speed communication, typically operating at 9600 bps or 19,200 bps.

Each of these low-speed protocols was originally designed for twisted pair communication, but is now widely supported by fiber optic components. Although RS-232 is actually a point-to-point protocol, it can be supported as a multi-dropped protocol with certain fiber optic transceivers. RS-422 and RS-485 have similar interface requirements except that RS-422 is generally point-to-point and RS-485 is a multi-drop protocol.

In addition to simple point-to-point and multi-drop transmission, there are many options to combine and transport multiple RS-232/422/485 signals on the distribution network. Video/data transceivers are also available that will carry these protocols and video signals over fiber so that a pair of transceivers can provide the video signal from a camera and the camera control data channel.

Some distribution networks use redundancy, and there are data transceivers that can be connected in a ring over fiber to provide redundancy in case of a fiber failure.

Communication for the ITS subsystems requires the provision of low speed links to the controllers for each device. A number of controllers can typically share each low speed channel, and with NTCIP compliant controllers, functions such that vehicle detection and dynamic message sign control signals can share the same channel.

As shown in Figure 5-12, the low speed channels can be carried on the distribution cable from the node to the device using fiber optic modems. These modems will carry the signal over a pair of fibers connected in series so that the same pair of fibers can serve a number of modems. When the signals are carried to the node, a modem converts the optical signal to an electrical signal that can be connected to node equipment.

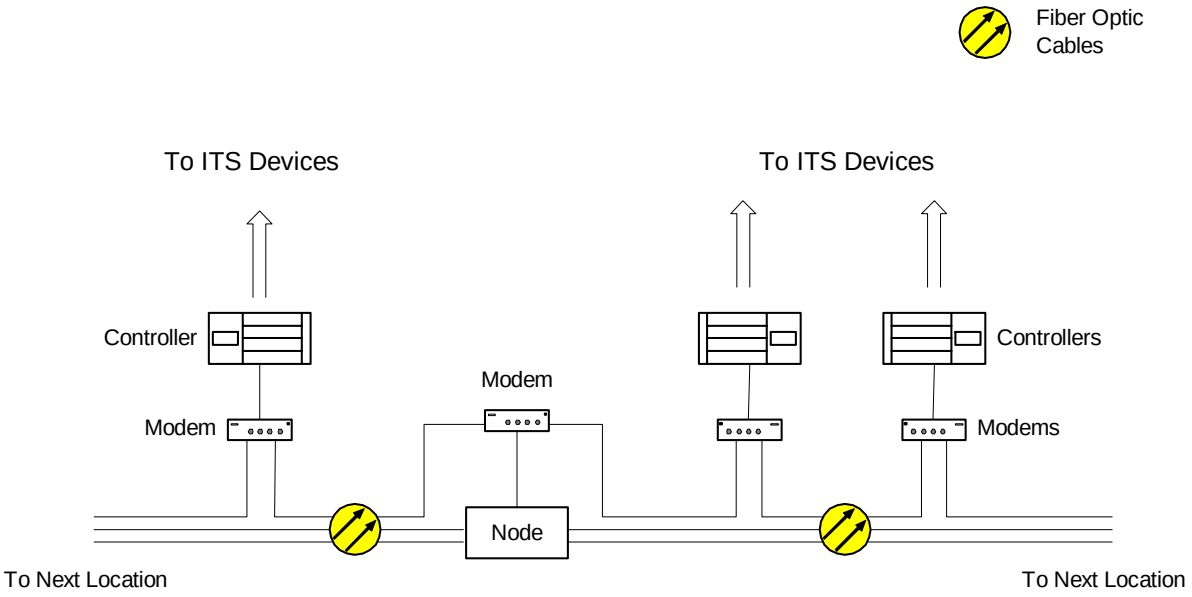

Figure 5-12. ITS Distribution – RS-232

Video Transmission

There are two economical methods of carrying the video signals from the field cameras to a control center: simple analog video transmission over fiber optic cables or digitized video carried by the backbone transmission equipment.

Analog video signals can be carried economically approximately 30-40 miles and provide a full motion video signal. Such transmitters could also carry the camera control signal as described above. Analog video signals differ from digitized video signals in that digital video signals are compressed. Consequently digital video signals require less bandwidth compared to analog video signals.

A number of video signals can be multiplexed and transported over a single fiber. Such systems typically combine from four to twelve signals on one fiber, but systems with as many as 128 signals are available. These systems become economical when there are few fibers available or the transmission distances are greater.

Individual camera signals would be carried on single channel transmission systems to a node location. At the node, a number of camera signals will be multiplexed into one signal that can be carried over a fiber to the control center, as shown in Figure 5-13.

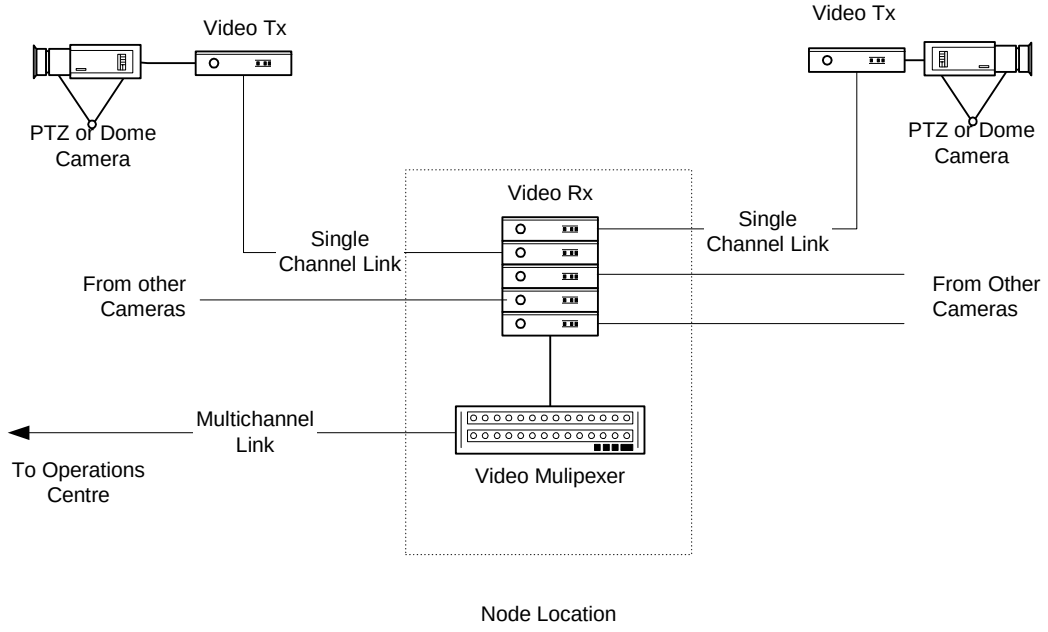

Figure 5-13. Video Links

The trend in the ITS industry is towards digital video transmission equipment that will carry digitized video signals over a TCP/IP network ("IP Video") as shown in Figure 5-14, and the quality of the video images can be equivalent to analog systems. There is significant development occurring in this area, with improved quality using less bandwidth, and the systems are becoming more cost effective.

to data packets that are suitable for transmission over TCP/IP based networks. This flexibility allows ITS network operators to store, duplicate, and transmit (i.e. multicast) identical video streams to multiple users on the network.

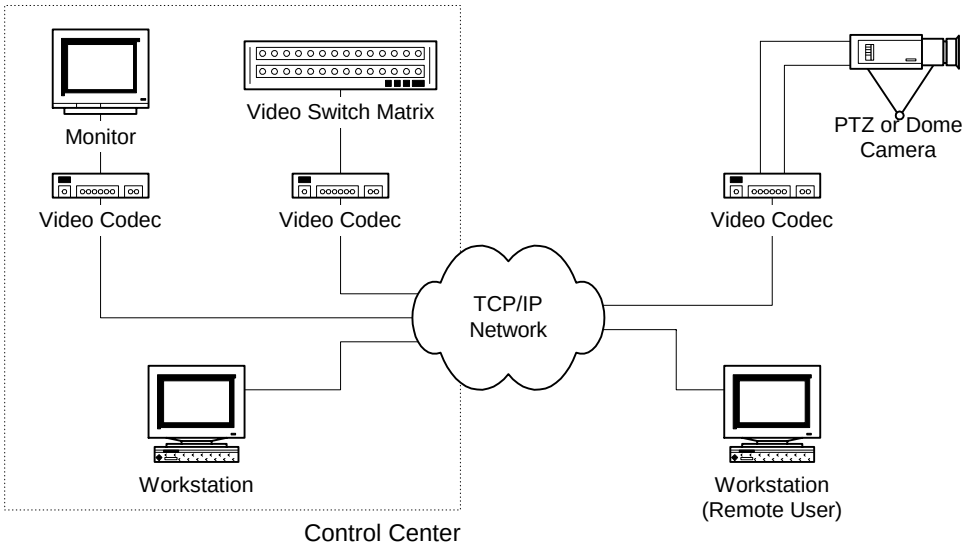

Figure 5-14. TCP/IP Network

Ethernet

With the proliferation of Ethernet (TCP/IP) communication in most computing equipment, this protocol is now appearing as an option in many ITS devices. Ethernet is a shared network providing a much wider bandwidth link to each device. (10 Mbps Ethernet typically provides up to 2 Mbps of actual throughput and 100 Mbps or "fast Ethernet" provides over 22 Mbps). Ethernet protocols also offer the ability to set transmission priorities to the different types of video and data traffic on the network. This allows the ITS network operator to control the Quality of Service (QoS) given to each application using the network.

Ethernet is the second low speed protocol standardized under NTCIP, and is gaining use in this area because the increased connection speed is needed to support the overhead required by the NTCIP protocol. With Ethernet being the defacto standard for office networks and the Internet, it is clear that Ethernet equipment will be available for many years to come.

Where the backbone network is Gigabit Ethernet, the use of Ethernet for the distribution can result in a very simple and flexible network. Small serial hubs can be used to convert RS-232/422/485 signals to Ethernet traffic so that the network can support all data requirements. If IP video is also implemented, all network traffic can be carried as an Ethernet signal as shown in Figure 5-15.

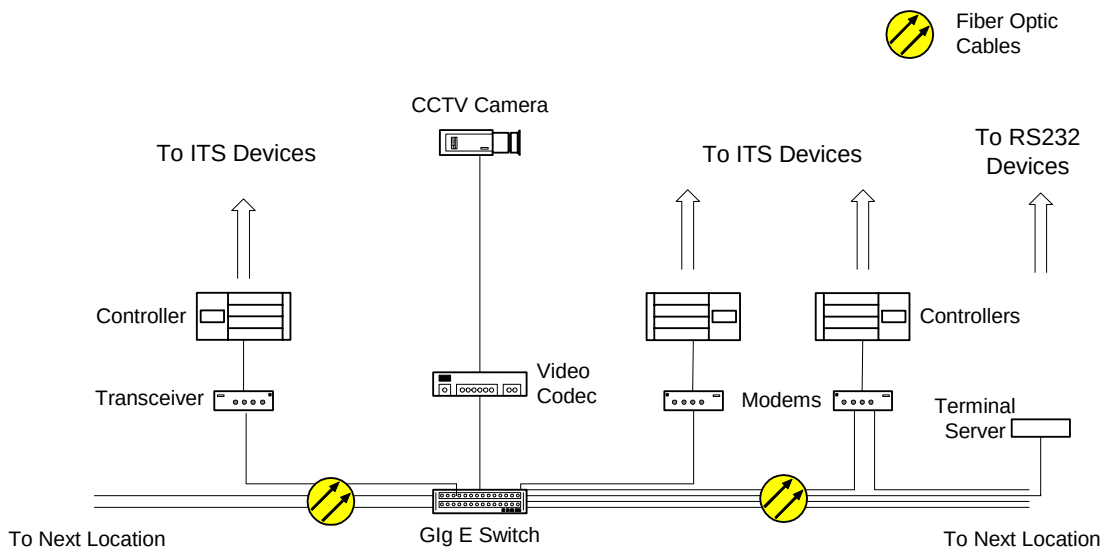

Figure 5-15. ITS Distribution

Wireless

Wireless communication is being used for distribution services for an increasing number of systems due to its advantage of not requiring a physical cable installation. Most wireless systems will carry RS-232/485 communication and can be used interchangeably with a pair of fibers and interconnecting fiber as described above.

Ethernet communication can also be accomplished over wireless links, and standards such as IEEE 802.16s are evolving to the point that wireless Ethernet communication manufacturers will begin production of equipment that can provide wireless broadband Ethernet coverage throughout the Salem-Keizer Metropolitan Area. IEEE 802.16a is a sister standard of the widely used IEEE 802.11 wireless Ethernet standard. Whereas IEEE 802.11 is commonly deployed in office buildings and has an effective operating coverage of approximately 300 feet from the network access point, IEEE 802.16a operates in the 2-11 GHz licensed and unlicensed frequency bands and is specifically focused on deployment where operating coverage in excess of seven miles.

Microwave transmission is an option in many ITS networks, including the Salem-Keizer. Unlike IEEE 802.16a, microwave communication requires visual line-of-sight between transmitter and receiver and frequency spectrum allocation from the Federal Communications Commission (FCC). However microwave communication would be especially effective in areas with large bandwidth requirements that are located on flat terrain and away from the fiber optic backbone.

Regardless of whether licensed or unlicensed frequencies are employed, encryption of the data at the transmitter with decryption at the receiver is recommended for all wireless applications where risk of interception and/or unauthorized manipulation is not desired. Data encryption can decrease overall data throughput anywhere from 15 to 40 percent depending on the type of wireless technology and encryption algorithm and techniques employed.

5.5 Communication Plan Recommendations

This section describes the communication plan recommendations, and the process used to reach these recommendations. This methodology starts with the areas to be connected, addresses the configuration to be used, and develops a logical plan to serve the entire area.

At this stage of the process, this plan provides a high-level conceptual design of the network. Therefore, as the alternative technologies, architectures and approaches were considered, detailed cost estimating was not performed. Recommendations are based on industry experience, and a higher-level analysis combining the ability to meet requirements, cost, technical maturity, availability of equipment and services and a number of other factors.

It is highly recommended that this plan be considered a guide, and not a final design. It is further recommended that as each network segment enters planning and detailed design, all options be considered for connecting centers and field devices, including:

- Building new fiber optic cable.
- Utilizing existing twisted pair or other copper plant.
- Utilizing existing wireless communication links.
- Leasing communication services from private providers.
- Building and/implementing new wireless communication links.

Finally, as discussed in Section 5.1, it is recommended that this plan be updated regularly, as various segments of the network are built, and if and as overall design philosophy changes.

Physical Topology

Section 5.4 discussed the common physical topologies employed in data communications. Among the topologies discussed, DKS Associates believes a hybrid physical topology is best suited for ITS operations in the Salem-Keizer Metropolitan Area. Employing a hybrid topology will allow member agencies to fully utilize their existing and planned network infrastructure in a manner that can benefit and complement others. Specific recommendations are listed below:

- **Establish broadband Ethernet communications using the existing copper twisted pair network on an "interim basis" until fiber optic cable is made available through new construction or leasing.** This would allow for the deployment of high bandwidth ITS field devices such as CCTV cameras. Instead of waiting for fiber optic infrastructure funding, Salem-Keizer ITS stakeholders could begin deploying measures to address traffic congestion in the area.

- **Construct communication hubs at key locations to facilitate high speed communications between the field and traffic management centers.** Ideally the communication hubs would be located on the fiber optic ring and serve as transition point for ITS data and video signals from copper twisted pair, wireless or other medium to the fiber optic ring. Since much of the fiber optic ring is not in existence, the communication hubs would be located where ITS corridors intersect with each other. In the absence of fiber optic cable, detailed design efforts will focus on maximizing the bandwidth at these locations by provisioning as many copper

twisted pairs as possible between the communication hub and the nearest TOC. If copper twisted pair cable is not available for Communication Hub-to-TOC communications, then wireless communications will be examined.

- **Establish high-speed Center-to-Center communications using fiber optic cable connections or Ethernet-over-Copper equipment.** The primary Center-to-Center link is expected to be between the City of Salem TOC and NWTOC. There are multiple fiber optic projects in the planning stages that will result in a dedicated fiber link between the two agencies. For other traffic management centers or nodes, DKS recommends establishing links to the City of Salem or NWTOC using fiber optic cable or Ethernet-over-Copper if possible. As a last option, DKS recommends exploring the potential for establishing a licensed microwave network in the area that is capable of transporting multiple CCTV data streams.

5.5.1 Communication Technology

This section provides a summary of recommendations for physical infrastructure and communication technology to support the deployment of ITS field devices and center-to-center information exchange requirements as identified in the deployment plan.

Plant Level

At the plant level, the preferred technology is fiber optic cable. The fiber may be owned by one of the agencies or leased as dark fibers from others such as Qwest or Comcast. As each network segment goes to detailed design, both leased and new build options should be analyzed and a final decision made on a case-by-case basis. Regardless of whether the physical plant is leased or agency owned, DKS recommends all Salem-Keizer ITS stakeholders be granted access to the entire network. This will ensure technology issues do not hamper the ability of Salem-Keizer traffic management staff to efficiently address the traffic congestion and incident management issues. From a maintenance perspective, DKS Associates recommends Salem-Keizer ITS stakeholders be held responsible for maintaining the ITS infrastructure placed in their jurisdiction.

<u>Single Mode (SM) vs. Multimode (MM) Fiber</u>

Although multimode fiber transmission could be used for links with short lengths (generally the distribution from a node to the field devices) this would require the use of a hybrid SM/MM fiber cable that would be a custom order. DKS Associates recommends the system utilize only SM fiber.

This approach will standardize the transmission components and allow the procurement of the widely available SM fiber. It will also ensure that all of the spare fibers in a cable could be used for any application. (In a hybrid cable spare MM fibers cannot be used for the longer distance links).

While fiber is the recommended technology for any new construction, other more cost effective distribution options may also be reviewed during detailed design, including using existing twisted pair plant and/or wireless links as discussed hereafter. Since multiple departments are requesting access to the fiber optic cable, DKS Associates concurs with the City of Salem and

ODOT standard fiber optic trunk line of 96 strands. This would support the current requirements and provide ample room to allow the fiber ring to support future requirements.

Use of Existing Twisted Pair for Distribution

The existing twisted pair cable in the City of Salem may be used for the distribution from the communication hub to the field device. The copper twisted pair network is currently used to transmit serial and Ethernet data between the BI-Trans/QuicNet 4.1 central server at the City of Salem and each of the traffic controllers deployed in the field.

Many central traffic signal control system manufacturers including McCain, the makers of BI-Trans, are currently developing versions of their product that communicate using Ethernet data packets as opposed to serial data. Increasing the deployment of serial-to-Ethernet converters will allow the City of Salem to reallocate the existing twisted pair from the Type 170 traffic controller to a digital subscriber line (DSL) modem.[8] The deployment would include a high data-rate digital subscriber line (SHDSL) modem and a field hardened Ethernet switch in each traffic signal controller cabinet. This upgrade would allow the City to free up pairs that could then be used to support deployment of other ITS field devices such as CCTV cameras and dynamic message signs.

To complete the SHDSL deployment, DKS Associates recommends establishing communications hubs at selected locations with access to both copper twisted pair and the fiber backbone. The purpose of the communications hub is to serve as the interface between the fiber network and the copper twisted pair network. To that end, each hub will typically be equipped with a digital subscriber line access multiplexer (DSLAM), Ethernet switch and fiber termination panel to perform this function. DKS estimates the communications hub equipment could be housed in a dedicated Type 332 traffic control cabinet. Figure 5-16 illustrates a typical SHDSL configuration in an ITS environment.

[8] When deploying serial-to-Ethernet converters both ends of the circuit are required to have conversion equipment manufactured by the same company to ensure interoperability.

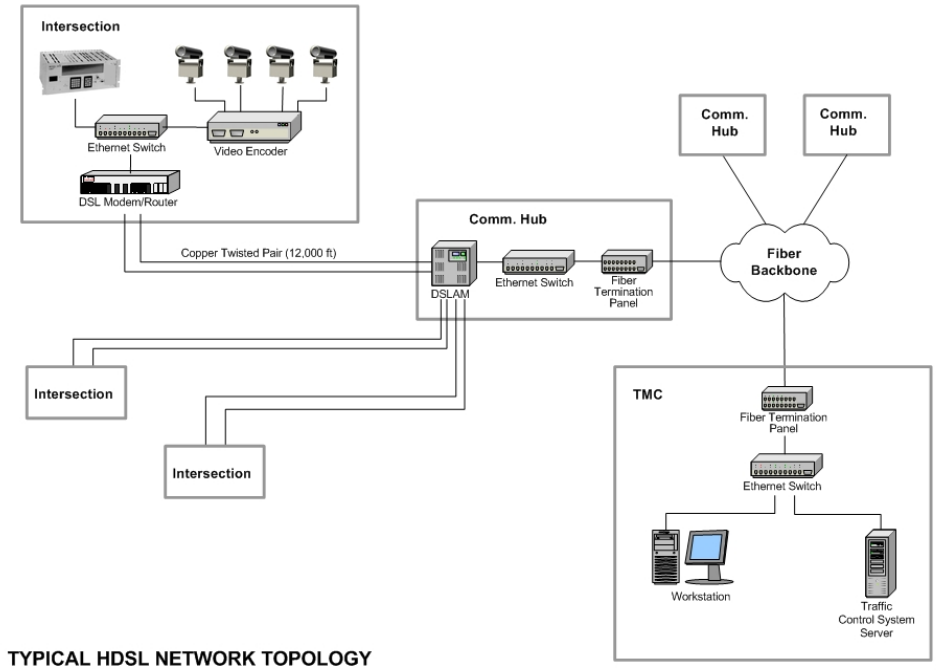

Figure 5-16. Typical HDSL Network Topology

Wireless Distribution

Wireless communication is also a viable option for distribution services between the node and the field device. Since high capacity wireless systems (SONET OC-3 at 155 Mbps) can typically cost over $60,000 per link, it is not anticipated that they would be the primary selection for backbone transmission although less expensive, lower speed wireless systems could be used as back-up Center-to-Center links for redundancy purposes. However, wireless systems could be considered to provide links for sections of the Salem-Keizer that do not have access to the backbone via fiber or copper twisted pair, or to link sections through environmentally sensitive areas or those with particularly difficult obstacles.

The choice of wireless or wireline transmission for specific areas should be determined during detailed design, and will be based on the local site conditions and facility availability.

Recommendation:
Expand the fiber optic network where feasible. Deploy Ethernet-over-Copper equipment on an interim basis in order to deploy high bandwidth ITS field devices in advance of fiber optic cable. For remote locations and/or sites without direct access to the fiber optic cable or copper twisted pair, consider using the wireless communications.

Video Transmission

It is recommended that the video signals on the network be transported as digitally encoded video. In order to give key stakeholders maximum flexibility in determining the location from

which ITS operations are controlled, analog video must be converted to IP data at some point in the network.[9] By using IP video transmission throughout the network the video can be easily routed to users at any point on the network.

With multiple agencies covering the region, it is expected that several video images will be of interest to more than one agency. In these circumstances one video image is commonly required at more than one control center. With digital video this is accomplished simply by sending the IP stream to a select group of users on the network with one transmission. This process is known as multicasting[10]. Instead of multicasting, analog systems require distribution amplifiers and additional video channels between control centers.

IP video transmission should adhere to a current Motion Picture Expert Group (MPEG) standard. At this time, the most common MPEG standards are MPEG-1, MPEG-2 and MPEG-4. MPEG-1 produces video quality slightly below the quality of most conventional VCR videos and is therefore no longer widely used. MPEG-2 was developed for all major TV standards including NTSC and HDTV.

MPEG-4 is based on MPEG-1, MPEG-2 and Apple QuickTime technology and is designed to require considerably less bandwidth than MPEG-1 and MPEG-2. The initial MPEG-4 standard, MPEG-4 SP (Simple Protocol) was finalized in 1998. MPEG-4 SP was intended for low bandwidth applications such as dial-up internet access. In 2000 MPEG-4 Version was ratified as an international standard. Since 2000 several incremental enhancements to this standard were introduced including Advanced Simple Protocol (ASP) and Advanced Video Coding (AVC). MPEG-4 ASP improves upon MPEG-4 SP in that the ASP algorithm is better able to compensate for changes to the picture caused by the movement of objects. MPEG-4 AVC, also referred to as MPEG-4 Part 10 and H.264, was recently introduced. AVC improves upon ASP by offering significantly greater compression. MPEG-4 AVC is capable of providing DVD-quality video under 40 percent of the bit rate of MPEG-2 and is considered promising for full-motion video over wireless and Ethernet-over-Copper connections.

MPEG-4 supports traditional video display devices and also allows standard web browsers to view the video stream over an Ethernet connection to the backbone network. MPEG-2 typically produces a higher quality video signal than MPEG-4 and is better suited to instances where bandwidth is not an issue (i.e. where agency owned fiber is available). MPEG-4 is better suited for instances where bandwidth and/or fiber optic cable is at a premium (i.e. where leased lines are employed).

---

[9] Analog transmission cannot be used since it requires a separate network and video receivers at the user's location. Since these receivers cannot be moved easily to accommodate the "virtual control center", the video is converted to IP traffic that can easily be directed to the user's IP address, no matter where they are connected in the network.

[10] Most IP traffic uses unicasts, where traffic is sent from one sender to one receiver on the network. With video, the traffic can be multicast, meaning video sent from one sender to a select group of receivers on the network in one transmission. This reduces network traffic by sending the data only once to two or more receiving locations. A third transmission mode, broadcast, sends from one address to all other addresses on the network. Broadcast transmission is typically only used for short messages to all devices, and must be used with caution if the receiving devices must respond to the broadcast command, as they can easily overload the communication network.

Digital video compression is an area undergoing constant innovation. ODOT has employed a mixture of MPEG-2 and MPEG-4 encoders statewide. Generally speaking, ODOT deploys MPEG-2 encoders at locations with fiber optic connections where bandwidth is not limited and MPEG-4 ASP encoders at locations with copper or wireless connectivity. As larger quantities of MPEG-4 AVC encoders enter the market, ODOT expects to transition away from MPEG-4 ASP to MPEG-4 AVC. DKS Associates recommends the Salem-Keizer stakeholders carefully review the video encoding technology on a regular basis to ensure the ITS network is employing compression technology that best fits their needs.

Backbone

Gigabit Ethernet transmission is recommended for backbone transmission. The primary reasons for this recommendation are as follows:

- GigE is well suited for all network topologies employed in the Salem-Keizer area such as ring (fiber ring) and star (possible HDSL deployment using existing copper twisted pair network).
- GigE switching equipment suitable for deployment in traffic control cabinets is becoming available in the marketplace.
- GigE provides flexible bandwidth allocation, which will allow key stakeholders to establish temporary traffic management centers as necessary.
- GigE will support transmission of the recommended IP video without any additional transmission equipment.
- GigE will directly support NTCIP standards for center-to-center communication, as well as NTCIP communication over Ethernet to field devices.
- GigE is mid-span compatible[11] between vendors, allowing different agencies to select different hardware for their portion of the network, and allowing open procurement.
- GigE provides quality of service (QoS) levels that can assign a priority (or QoS) to data from different ports. This allows prioritization of the services to be provided if the network is operating in a failure mode or peak traffic period. The IEEE 802.1.p standard delineates eight categories for prioritizing traffic at the Data Link layer of the OSI model. At this time many Ethernet equipment manufacturers do not strictly follow IEEE 802.1p. Instead they employ two or three categories of traffic prioritization, which are typically proprietary in nature. Therefore, ITS networks desiring a high level of QoS should strongly consider standardizing on a single Ethernet switch manufacturer within the communication hub and Traffic Operations Centers.

Recommendation:
Convert analog video to digital. Digital video provides the greatest flexibility for sharing video between multiple agencies. Consider the installation of digital video cameras as the quality improves.

[11] When equipment is mid-span compatible, products from different vendors will function fully when inter-connected.

Reasons GigE is recommended over SONET

SONET transmission offers very fast switchover to redundant rings and dedicated channel capacity to any point in the network. However, it does not provide the advantages of GigE in the following areas:

- A pure SONET implementation does not support TCP/IP traffic that is specified in the NTCIP standards, or the low speed data channels. In these cases, additional channel banks or multiplexing/encoding hardware would be required.
- Proprietary SONET implementations will support video, Ethernet and low speed data directly, but once a type of equipment is selected for the ring, the same vendor must be used elsewhere. This could be a problem in multi-agency networks.
- SONET networks set up channels and reserve bandwidth between points on the network. Where the data requirements change, particularly as routing for video is changed, the channels would have to be re-routed through the nodes. Standard SONET implementations do not do this automatically, or in a user-friendly manner; it must be completed through changes at the network management system.
- Generally, SONET has a higher cost per node, particularly when the equipment required to convert the low speed RS-232 signals for transport on the SONET network are included.
- Overall cost and complexity of SONET network (due to the points discussed above) is not justified by regional redundancy requirements.

ATM

Asynchronous Transfer Mode (ATM) is a network technology based on transferring data in cells or packets of a fixed size. The small, constant cell size allows for the efficient transmission of video, audio and data on the same network. ATM equipment is expensive to procure and requires a high level of training to operate and maintain compared to Ethernet and is not recommended for ITS networks.

Recommendation:
Use Ethernet for links between field devices and communication hubs. Utilize GigE for Hub-to-TOC communications and Center-to-Center communications. In the mid to long term, consider 10GigE where the extra bandwidth is required and as prices of the equipment become more cost effective.

Distribution

At this time, the recommended protocol for distribution to most devices is RS-232 communication, but all detailed design should support a migration to Ethernet. This recommendation is based on the large installed base of RS-232 traffic signal controllers, and the fact that Ethernet based controllers using NTCIP protocols are only just now becoming available. As new versions of controllers are made available in the market, Ethernet communication should be considered, as it will likely become the standard in the future.

To provide RS-232 distribution to field devices over the GigE network, small terminal servers or serial hubs should be used. These devices are up-linked to the Ethernet network on the backbone, and provide a number of RS-232/485/422 ports, each addressable with a unique IP

address. The central computer would communicate over the Ethernet network to the serial hub, where the data would be converted. From the hub to the end device, fiber optic links, wireless links or twisted pairs could be used as determined in detailed design.

Where possible, field nodes would be co-located at video camera locations, allowing video to be encoded and directly inserted on the backbone. When this is not possible, the video signal must be carried on the distribution network. It is recommended that the video image be converted to IP video at the base of the pole, and transported using video transceivers to the node. This approach eases a later migration to Ethernet.

Recommendation:
Migrate to IP addressable field devices as they become available. In the interim, provide terminal servers to support the Ethernet transmission standard.

5.5.2 Map of Proposed Communication System

Figure 5-17 illustrates the existing and proposed ITS equipment, centers, communication hubs, and the existing and proposed communication network infrastructure. The following sections briefly describe some details of the proposed network.

SALEM-KEIZER METROPOLITAN AREA ITS PLAN

PLANNED ITS NETWORK INFRASTRUCTURE

August 2005

FIGURE **5-17**

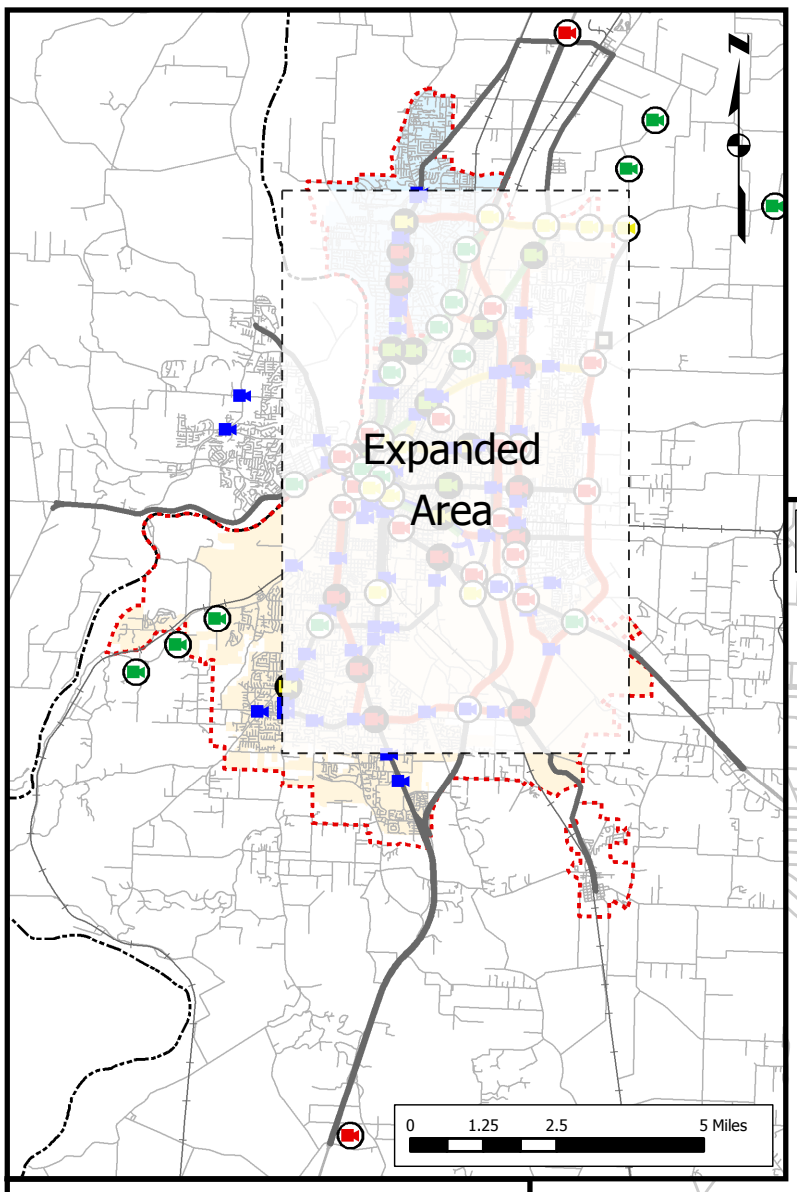

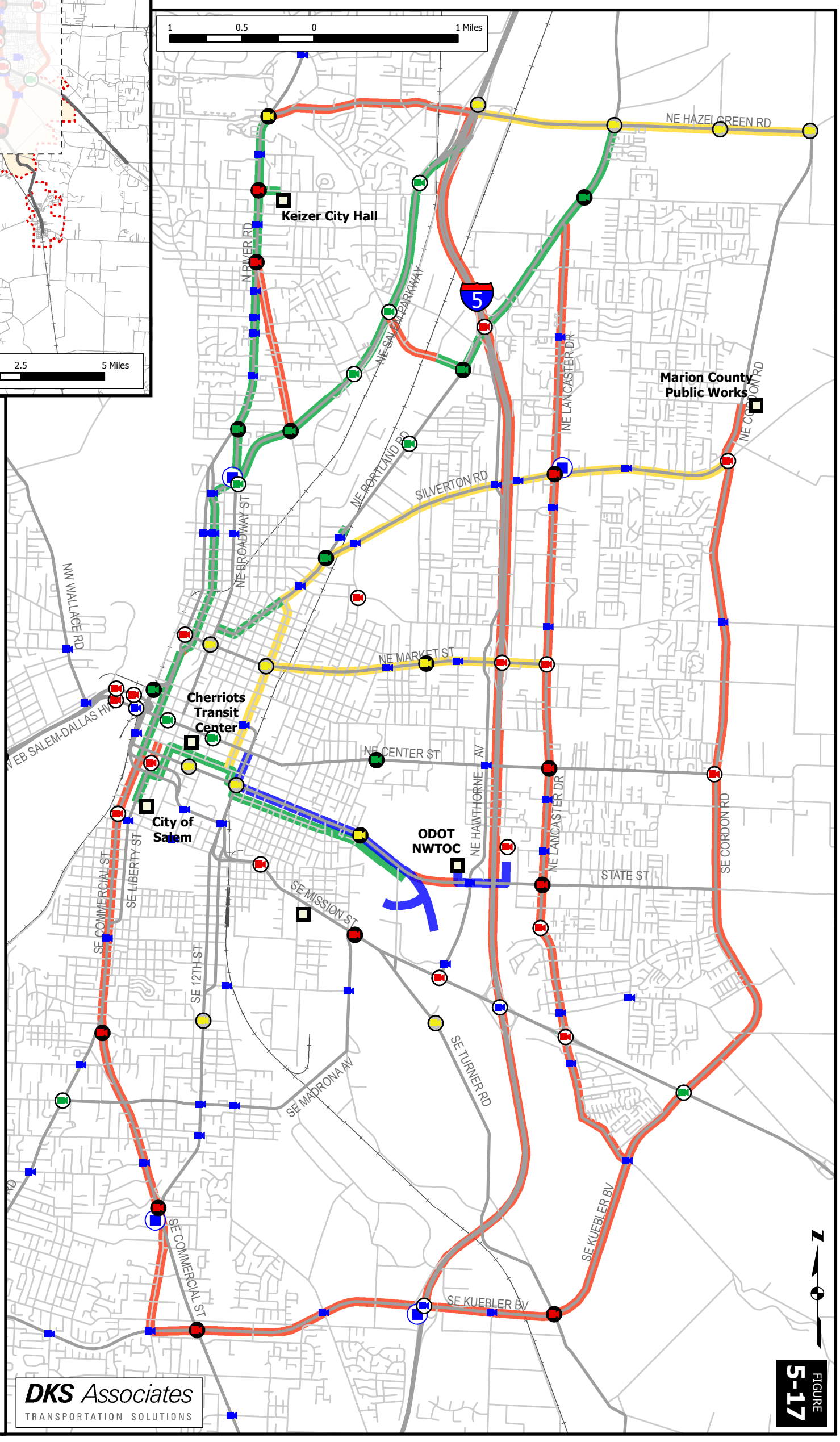

Legend

CAMERAS

color corresponds to cable phasing

- INTERSECTION VIDEO DETECTION
- PAN-TILT-ZOOM CAMERA
- INTERSECTION VIDEO DETECTION with NEW PAN-TILT-ZOOM

FIBER OPTIC CABLE/PHASING

- EXISTING
- PROPOSED 0-5 YEARS
- PROPOSED 6-10 YEARS
- PROPOSED 11-20 YEARS

- CENTERS
- COMMUNICATIONS HUB

CITY LIMITS

- KEIZER
- SALEM

- STUDY CORRIDORS
- ROAD NETWORK
- COUNTY BOUNDARY
- RAILROAD
- URBAN GROWTH BOUNDARY

Backbone Routes
The communication links identified in this plan will likely be constructed in phases, either as funding becomes available or in coordination with roadway improvement projects. One way to cost effectively support this phased construction process may be to build new fiber within the boundaries of a specific construction project and utilize leased services, Ethernet-over-Copper or wireless for hub to hub and/or hub to center connectivity.

When fiber cable is installed on any of these routes, sufficient fibers to support the ultimate network should be included, even if the current build is only a section of the backbone.

Standard Network Node Bandwidth Allocation
To determine bandwidth requirements, the standard field node configuration assumed would consist of the equipment listed in Table 5-2. The bandwidth requirements are based on a worst case scenario where the data sources listed in the table are assumed to be operating at maximum bandwidth at all times. DKS recommends designing the ITS network to be capable supporting the maximum possible bandwidth.

When performing detailed design, DKS Associates recommends following a design philosophy of distributing the bandwidth evenly between backbone nodes. This approach often allows for a common design approach to be applied to the system, simplifying the network configuration and maintenance.

Table 5-2. Standard Node Requirements

Communication Channel	Type	Description	Maximum No. of Channels Required	Approximate Maximum Bandwidth
CCTV Cameras	Video	One video camera per node	1	8 Mbps
CCTV Camera Control	RS-232/422/485	One common channel for all cameras	1	9.6 kbps
Traffic Signal Control	RS-232 or Ethernet	Up to six intersections per channel	2	56 kbps
System Detectors	RS-232 or Ethernet	Up to six detectors per channel	1	9.6 kbps
DMS	RS-232 or Ethernet	Up to four signs per channel	1	9.6 kbps
Other (HAR, RWIS)	RS-232		1	9.6 kbps
Total				8.095 Mbps

5.6 Maintenance & Operations

Figure 5-18 indicates the primary components of a generic regional communication network, and will be used to illustrate some of the maintenance and operations issues related to the communication network.

This figure assumes a network configuration in which agency specific fiber may be located in the same bundle or sheath as fiber that is utilized for the regional communication backbone. It also assumes that shared regional communication equipment (such as hubs, routers, multiplexers, transmitters and receivers) may be located in one agency's cabinet. Under this scenario, a number of different maintenance and operational issues need to be addressed and a series of recommendations are included in this section.

5.6.1 Fiber and Equipment Design

Communication equipment such as fiber optic cable, splice cabinets and enclosures, hubs, routers, multiplexers and modems should be standardized to the extent possible. In addition, local agencies should utilize standard equipment for their portion of the communication network that follows the standards of the backbone communication network. This supports bulk equipment purchasing, stocking of spare equipment, training of operations and maintenance personnel, network expansion and overall interoperability.

In cases where multiple agencies share portions of the same fiber optic cable plant, DKS Associates recommends the establishment of cooperative agreements between all involved parties. These agreements will formalize the fiber optic cable strand assignments for each agency and delineate the operational responsibilities, maintenance responsibilities and documentation responsibilities of each stakeholder. Frequently agreements of this nature require all parties to document the location of all cable, splices and end electronics in a common manner, typically using a single database.

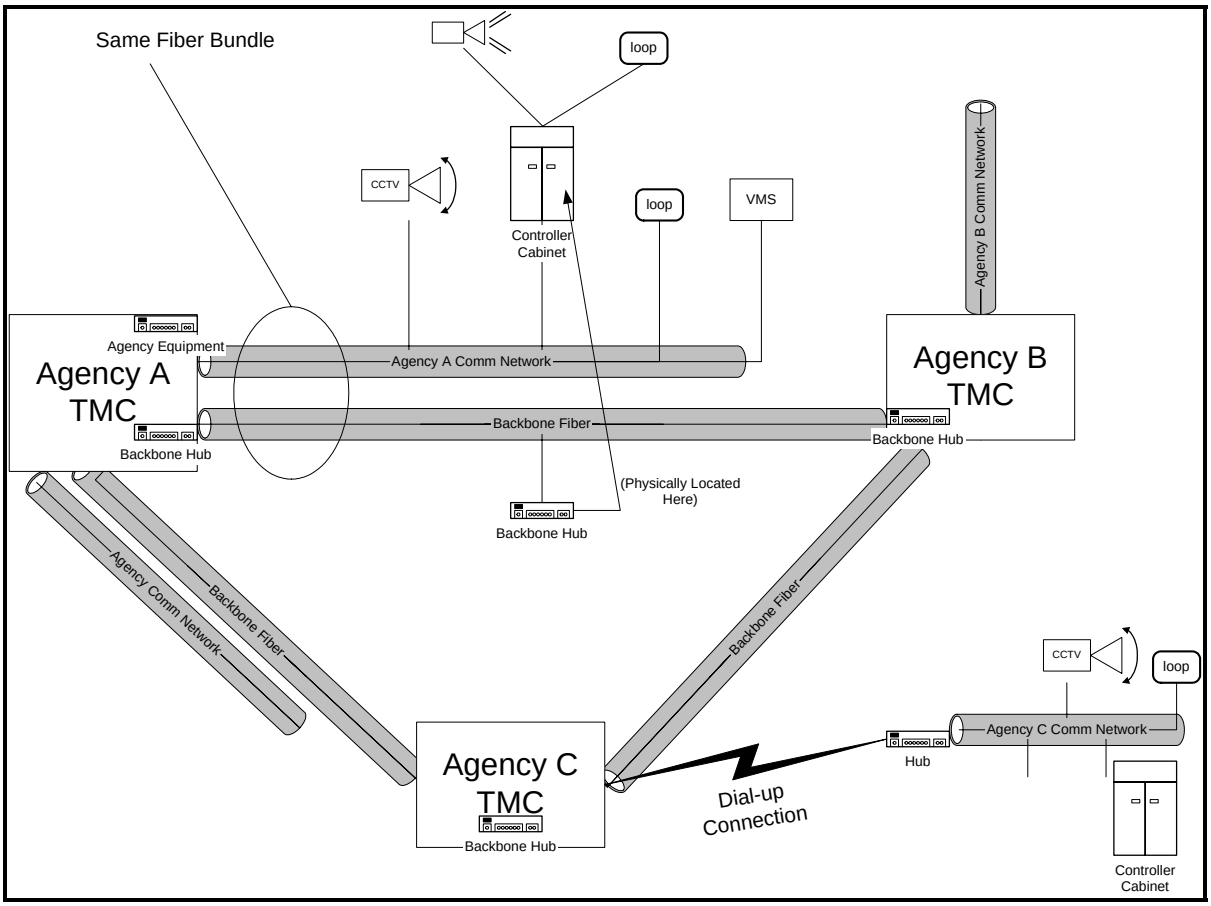

Figure 5-18. Conceptual Communication Network

5.6.2 Operations and Maintenance (O&M) of Communication Equipment

Many agencies have found that the cost of maintaining their own fiber optic networks—including equipment, training, and allocated staff—can be prohibitive. The rate of equipment or cable failure is so low that the trained personnel often do not get the opportunity to use the training on a small system, making them ineffective when repairs are needed. Often a group of regional agencies have pooled their resources, developed necessary agreements, and either selected a lead agency or a preferred contractor to maintain the network.

Any final maintenance agreements will need to address the issues in the following subsections.

5.6.2.1 O&M of Agency Dedicated Fiber

This agreement should identify each agency's responsibility for maintaining and operating fiber that connects to their own field devices.

5.6.2.2 O&M of Backbone Fiber

This agreement should identify each agency's responsibility for maintaining and operating fiber that is used for the regional communication backbone.

5.6.2.3 O&M of Equipment Located in Agency Facilities

This agreement should identify each agency's responsibility for operating and maintaining equipment that is located in an agency's facility (such as the TOC). It is assumed that both agency specific communication equipment, as well as backbone communication equipment, will be included in agency facilities, and the responsibilities for operating and maintaining both sets of equipment need to be established.

5.6.2.4 O&M of Equipment Located in Agency Field Devices

This agreement should identify each agency's responsibility for operating and maintaining equipment that is located in an agency's field device (such as a controller cabinet or splice vault). It is assumed that both agency specific communication equipment, as well as backbone communication equipment, will occasionally be included in agency field devices, and the responsibilities for operating and maintaining both sets of equipment need to be established.

5.6.3 Service Level Agreements

Once an agency (or group of agencies) has been determined as the lead agency (ies) for ongoing maintenance and operations of the network, agreement needs to be reached on level of service. Service level agreements (SLA's) include issues such as response time for a network outage to be repaired, prioritization of bringing equipment/fibers back on-line after an outage and availability of the network (acceptable amount of downtime per year).

5.6.4 Utilization of Dial-Up and Leased Line Connections

Some agencies currently use (or may plan to use) leased line connections to field devices. Opportunities to replace these connections with agency-owned infrastructure and/or purchase bulk telecommunication services from service providers should be examined, and regional rules-of-thumb developed.