MULTIMODAL TRANSPORTATION PROGRAM PROJECT APPLICATION

Oregon Department of Transportation

Transportation Project Sponsors

1. Project Sponsor (must be a public agency)–REQUIRED

Organization Name:	City of Canby		
Contact Person Name:	Matilda Deas, AICP	Title:	Senior Planner
Street Address:	111 NW 2nd Avenue	Phone:	(503) 266-7001
City, State Zip:	Canby, Oregon 97013		
E-mail:	deasm@ci.canby.or.us		

2. Co-Sponsor(s)

List the organization names for any Co-Sponsors of this project:

Transportation Project Information

3. Project Name–REQUIRED

Project Name: Logging Rd Bridge path connections to OR 99E

4. Project Budget Summary - This table will automatically fill in.

	Project Funds	% of Project Costs
Total Costs	$460,000	
Non-Eligible Costs		
Total Transportation Project Cost	$460,000	100%
Matching Funds	$138,000	30%
Requested Funds	$322,000	70%

5. Provide a brief summary of the project (max 800 characters)**–REQUIRED:**

The existing multi use Logging Rd Trail currently crosses OR99E via a grade separated bridge, but has no connection to existing sidewalks on the south side of OR99E and no connection nor sidewalks on the north side of OR 99E. The project would construct an ADA multi use path connection to the existing sidewalks on the south side (eliminating a non sanctioned pedestrian rail crossing) and construct a new ADA multi use path connection on the north side which would extent to connect to existing sidewalks and bike lanes on N Redwood Street to the east and N Pine Street to the west.

6. Is this project a continuation of a previous Statewide Transportation Improvement Program (STIP) Project?

○ Yes ◉ No

If yes, describe the status of the previous STIP project.

7. Does this project complement or enhance an existing or planned STIP project? For example, does it provide a more complete solution for an existing project or is it intended to work with another planned project, including a "Fix-It" STIP project?

○ Yes ◉ No

If yes, describe the relationship of this proposed project to the other, including planned timing of both projects.

8. Project Problem Statement–REQUIRED

Provide a paragraph explaining the problem or transportation need the project will address:

The Logging Rd Trail is a popular walking, running and bicycling trail that traverses Canby from north to south. The Trail crosses OR99E via a grade separated bridge, but there is currently no trail connection from the bridge to existing sidewalks on OR99E. Trail users informally cross the rail road tracks to the Fred Meyer shopping complex via a dirt path. There are no safety devices in place as this in not an approved crossing, so the risk to users is great. The project would remedy that deficiency and provide access to existing sidewalks on the south side of OR 99E, and construct a multi use path and ADA access on on the north side of OR 99E that connects to existing sidewalks east and west of the new access path.

9. Transportation Project Location–REQUIRED

City:	Canby	County:	Clackamas
MPO:		Special District:	Canby Urban Renewal District

Project Location Detail: (include as appropriate: road and milepost range, rail line and milepost range, GPS coordinates, bus route and stops, bike path or multipurpose trail locations, sidewalk locations, or other location detail)

At the intersection of Union Pacific Rail Spur and OR99E where Logging Rd Bridge spans OR 99E.

10. Maps and Plans (Project Site and Vicinity Maps are required for all construction projects. Include other applicable maps or drawings, if available.)

◉ Attached/Upload ○ Not Applicable	Vicinity Map (8.5x11) (may be inset on site map page)
◉ Attached/Upload ○ Not Applicable	Site map/air photo (showing existing site) (8.5x11)
◉ Attached/Upload ○ Not Applicable	Site map (showing proposed construction area clearly marked) (8.5x11)
◉ Attached/Upload ○ Not Applicable	Typical Cross Section Drawings (showing proposed construction funded by the requested funds clearly marked) (8.5x11)

11. Project Description–REQUIRED

Clearly describe the work to be funded and describe what will be built, any services that will be provided, what equipment will be purchased, or project planning or environmental document efforts that will be paid for with Requested Funds. Include whether Practical Design considerations have been applied to the proposed project. Identify if the project can be completed in phases, and whether the project or phase will provide a complete, useful product or service. (Maximum 4000 characters)

On the north side of OR 99E the improvements would include extending the existing NE 4th Avenue 6 ft bike lanes approximately 450 feet on each side along N. Pine Street, then continuing east with an 10 foot multi use path that would continue east to connect to sidewalks on N Redwood Street (approximately 1,725 feet). At the Logging Rd Bridge, an 8 ft path connection would terrace up the bridge fill slopes to provide an ADA connection to the Logging Road Trail. All of the improvements would be north of and not cross any existing rail lines.

Improvements on the south side include the elimination of the current non sanctioned pedestrian rail crossing located approximately 800 feet south of OR 99E, and construction of a 600 ft (approximately) multi use ADA path that would traverse down the west side of the bridge fill slope to connect to the existing sidewalk along OR 99E. A retaining wall and fencing are planned for this section. The improvements on the south side would be west of and not cross the existing rail lines.

From a practical design standpoint the project would increase the safety of the existing trail by providing safe access from the bridge to OR99E and eliminating the non sanctioned rail crossing. The public has demonstrated strong support for the project which is documented in our Parks Master Plan and Transportation System Plan. Expanding a very popular existing facility is an efficient use of scarce resources.

The operational life expectancy for the improvements is 20 years. Design standards will comply with ODOT/APWA Specifications, Canby's Transportation System Plan, and will comply with the Oregon Bike and Pedestrian Plan.

Is is possible to phase the project by initially constructing improvements only on one side of the

highway.

12. Primary Project Mode(s)

☐ Passenger Rail	☐ Light Rail	☐ Bus/Transit
☒ Pedestrian	☒ Bike	☐ Highway/Road
☐ Other:		

13. Project Activities

☒ Infrastructure Engineering, Design, or Construction	☐ Project Planning and Development	☐ Operations/Service Delivery
☐ Capital Equipment Purchases	☐ Transportation Demand Management	☐ Other

Timetable and Readiness Information

14. Indicate anticipated timing for the following activities, as applicable. Provide a date, if known, or year–REQUIRED.

Anticipated Dates	Activity
2017	Requested STIP Funding Year (e.g. 2016, 2017, 2018) **- REQUIRED**
8 wks after funds	Bid Let Date
8 wks after bid let	Construction Contract Award
8 wks after award	Construction Complete
	Capital Equipment Purchase
	Operations/Service Begin
	Other Major Milestone:
6 months after award	Project Completion/End of Activities funded through this request - **REQUIRED**

15. Is the proposed project consistent with adopted plans? (Plans may include, for example, transportation plans, mode plans such as bike/ped or transit plans, economic development plans, comprehensive plans, corridor plans or facility plans.)–REQUIRED

◉ Yes ○ No

Describe how the proposed project is consistent with adopted plans. List plans that include the project (with page numbers if possible) or describe how the project meets plan intent. If the project is not consistent, explain how and when plans will be amended to include the project.

The Logging Rd Trail is listed as Goal 11 of the City of Canby's Parks and Recreation Master Plan. The City recently updated our Transportation System Plan (adopted in 2011) which included plans for Bicycle and Pedestrian improvements. This project is listed in both sections (pg 5-6 (T1) and pg 6-5 (T1)) The Park and Recreation Advisory Board has submitted an official letter of support for this project (attached).

16. Is the proposed Transportation Project consistent with Major Improvement Policies including OTP Strategy 1.1.4 and OHP Action 1G.1?–REQUIRED

(●) Yes ( ) No

Describe how the proposed investment is consistent with OTP Strategy 1.1 and for highway projects, OHP Action 1G.1. If the project corresponds to a later priority in these strategies, describe how higher priority solutions have already been tried or why they are not applicable or not appropriate to the location.

The proposed project will improve an existing bike and pedestrian facility by providing new connections from the Logging Road Trail to both sides of OR99E. These new connections will provide users access to the Clackamas County Fair Events Center and Canby's Downtown commercial core to the west, and to the Fred Meyer shopping complex and urgent care facility to the east. These new connections will provide additional capacity for bike and pedestrian users and will provide a safe and direct route for residents and recreational users to access businesses and events in our community.

Project Benefit Information

Questions 17 through 26: Describe how the proposed solution will help achieve the outcomes listed below. Describe the benefits that the proposed solution is expected to achieve and provide documentation of those benefits where available, such as summaries of data analysis or modeling results, or letters of commitment from participants or employers. Where appropriate, also include in the description whether the proposal will mitigate or prevent a negative impact to the desired outcome.

This information and information throughout the application will be used as input to the STIP decision process. It is not expected that every solution will help achieve every benefit. Different types of solutions are likely to have different kinds of benefits and no type of solution or benefit is assumed to be more important than others. Please provide a realistic description of expected benefits of the proposed solution and feel free to use N/A where the benefit or outcome listed does not apply to the proposal.

17. Benefits to State-Owned Facilities

Outcome sought: preserve public investment by maintaining efficient operation of state-owned highways and other facilities through operational improvements, local connectivity, congestion-reducing projects and activities, etc.

For example, will the solution:

- Provide an alternative to travel on state owned facilities?
- Cost less than a state facility improvement with equal benefits?
- Include local efforts to protect the investment such as an Interchange Area Management Plan?
- Plan for or contribute to development of a seamless multimodal transportation system?
- Complete or extend a critical system or modal link?

The proposed project will provide bike and pedestrian users a safe and pleasant alternative to vehicular travel to access Events, shopping areas and health care facilities in our community. The project rectifies a key disconnect that currently exists in our multi use path system. Residents and visitors can use the path system to traverse our community north and south, but have no way to safely access events, businesses and other core facilities from the path. The proposed connections will remedy that disconnect. The Park and Recreation Master Plan identifies this connection as one of the key components of the "Emerald Necklace", which is a planned trail system that provides a perimeter trail around the community with "spokes" or paths that connect to interior amenities such as parks, downtown, businesses and/or and the Fair and Events Center.

18. Mobility

Outcome sought: provide mobility for all transportation system users and a balanced, efficient, cost-effective and integrated multimodal transportation system.

For example, will the solution:

- Improve or better integrate passenger or freight facilities and connections, including multimodal connections, to expedite travel and provide travel options?
- Improve or provide a critical link in the transportation system or connection between modes for travelers or goods?

The proposed improvements will provide opportunities to more directly link bike and pedestrian users with other transportation facilities, as there are bus stops along OR 99E, Fred Meyers, and the Fair and Events Center. The path connections will expand travel options for residents as they will now be able to access community facilities directly from the Logging Rd Trail .

19. Accessibility

Outcome sought: ensure appropriate access to all areas with connectivity among modes and places and enable travelers and shippers to reach and use various modes with ease.

For example, will the solution:

- Improve connections within residential areas and/or to schools, services, transit stops, activity centers and open spaces, such as by filling a gap in bicycle, pedestrian, or transit facilities?
- Improve or expand access to employers, businesses, labor sources, goods or services?
- Plan for or contribute to expanding transportation choices for all Oregonians?

As noted above the proposed trail improvements will provide direct access from the Logging Rd Trail to a myriad of community amenities heretofore unavailable to Trail users.

20. Economic Vitality

Outcome sought: expand and diversify Oregon's economy by efficiently transporting people, goods, services and information.

For example, will the solution:

- Support, preserve, or create long-term jobs and capital investment? Will it do so in an economically distressed area?
- Enhance opportunities for tourism and recreation?
- Plan for or contribute to linking workers to jobs?

Expanding the linkages from the Logging Rd Trail will greatly enhance its attractiveness for recreational and tourism opportunities. Visitors and residents alike will be able walk and bike to Clackamas County Fair and Events Center which attracts thousands of visitors each year. The City has recently completed bike and pedestrian improvements that provide a safe connection from the Events Center to our Downtown Commercial Core, so making the proposed connections to the Events Center could in turn encourage users to shop our downtown businesses.

21. Environmental Stewardship

Outcome sought: provide an environmentally responsible transportation system that does not compromise the ability of future generations to meet their needs and encourage conservation of natural resources.

For example, will the solution:

- Use design, materials or techniques that will more than meet minimum environmental requirements or mitigate an existing environmental problem in the area?
- Help meet air or water quality, energy or natural resource conservation, greenhouse gas reduction or similar goals?
- Plan for or contribute to the use of sustainable energy sources for transportation?

The Logging Rd Trail is a very popular amenity in our community. Expanding access to and from an already successful bike and pedestrian facility will encourage more visitors and residents to shop and recreate sans vehicles, which could reduce vehicle emissions and conserve resources.

22. Land Use and Growth Management

Outcome sought: support existing land use plans and encourage development of compact communities and neighborhoods that integrate land uses to help make short trips, transit, walking and biking feasible.

For example, will the solution plan for or contribute to:

- Efficient development and use of land as designated by comprehensive or other land use plans?
- Community revitalization including downtowns, economic centers and main streets?
- Compact urban development and mixed land uses?

As noted above the project will provide access to the Clackamas County Fair and Events Center, Fred Meyer shopping complex, Urgent Care facilities, and our Downtown Commercial District. As development occurs adjacent to the Trail, the City requires developers to provide public access to the Trail. Several higher density developments have been constructed adjacent to the Trail. Residents can use the Trail to access the Willamette River and City Parks, and with the proposed connection, the community facilities noted above.

23. Livability

Outcome sought: promote solutions that fit the community and physical setting, enable healthy communities and serve and respond to the scenic, aesthetic, historic, cultural and environmental resources.

For example, will the solution:

- Enhance or serve unique characteristics of the community?
- Use context sensitive principles in design and minimize impacts on the built and natural environment?
- Encourage a healthy lifestyle and enable active transportation by enhancing biking and walking networks and connections to community destinations or public transit stops or stations?
- Include elements that will make the facility or service more attractive, enjoyable, comfortable or convenient for potential users?

The Logging Rd Trail provides access to the Willamette River and our adjacent Willamette Wayside Natural Area. The City is engaged in a visioning process with the Canby community. River access and recreational trail opportunities are high priorities within the community. With the proposed improvements visitors and residents could walk or bike to the river and riverfront park then continue on to enjoy events at the Events Center and shop downtown or at the Fred Meyer complex. That is both unique and convenient.

24. Safety and Security

Outcome sought: Investment improves the safety and security of the transportation system and takes into account the needs of potential users.

For example, will the solution:

- Improve safety by using designs or techniques that exceed minimum requirements for safety and are likely to reduce the frequency or severity of crashes?
- Help reduce crashes involving vulnerable road users such as bicyclists and pedestrians?
- Improve the ability to respond to an emergency and quickly recover use of the facility or service?

The primary safety benefit of this proposal would be the elimination of a non sanctioned pedestrian rail crossing, which creates a very dangerous situation. The construction of a new multi use path on the north side of OR 99E will also provide users with a safe route parallel to OR99E that will connect to existing bike and pedestrian facilities east and west of the Logging Rd Bridge (N Redwood and N Pine respectively).

25. Equity

Outcome sought: promote a transportation system with multiple travel choices for potential users and fairly share benefits and burdens among Oregonians.

For example, will the solution:

- Benefit a large segment of the community?
- Benefit one or more transportation disadvantaged populations?
- Improve environmental justice or economic equity of the community or region?

Residents on both sides of OR99E can access the Logging Rd Trail and enjoy the recreational benefits it can provide. Canby is a predominantly flat community so the trail can often be enjoyed by the physically challenged. The proposed ADA trail connections will make certain that physically disadvantaged trail users can share in the benefits the improvements will provide to the broader community.

26. Funding and Finance

Outcome sought: investment uses funding structures that will support a viable transportation system and are fair and fiscally responsible.

For example, will the solution:

- Have ongoing funding available for operations and maintenance?
- Support the continued use of prior investments or reduce the need for future investments?

The project is located within the City's Urban Renewal District which will contribute to the construction of the improvements. The City's Street Maintenance Department has funds to maintain the facility when completed.

Budget Information

27. Estimated Project Costs–REQUIRED

List estimated costs for the various activities listed below, as applicable to proposed project. Shaded fields are automatically calculated.

	Enter Values in this Column	Total Column
Project Administration	$17,000	
Staff Costs (for Service/Educational Projects)		
Project development and PE	$88,000	
Environmental Work		
Coordination and Outreach		
Leased Space		
Building purchase and/or Right of Way		
Capital Equipment		
Non-Construction Project Costs Total		**$105,000**
Utility Relocation		
Construction	$355,000	
Construction Project Costs Total		**$355,000**
Total Eligible Project Cost		**$460,000**
Non-Eligible Costs (other project non-transportation expenditures, e.g. un-reimbursable utilities)		

28. Project Participants and Contributions–REQUIRED

List expected project participants and their contributions in the table below. Begin with the amount contributed by the Sponsor and include contributions from Project Co-Sponsor and other participants, if applicable. Sponsor and participant contributions must add to at least 10.27% of Total Transportation Project Costs. This is the amount of matching funds typically required for most federal funding programs. The specific amount of matching funds required for the proposed project may be more or less than 10.27%, depending on its funding eligibility. Specific match requirements will be determined during application review.

Participant Role	Participant Name	Project Funds Contribution	Percent of Transportation Project Total Cost
Sponsor	City of Canby	$138,000	30%
Co-Sponsor			0%
Participant			0%
Participant			0%
Total		$138,000	30%

If you have more co-sponsors and participants than lines in the table above, list their names and contribution amounts in the box below and enter the totals of Co-Sponsor and Participant contributions in the appropriate spaces in the table above.

Submittal Approval

29. Project Sponsor Signature Authority Information–REQUIRED

The Authorizing Authority identified below approved the submittal of this application on behalf of the Project Sponsor. Project sponsors other then the Oregon Department of Transportation will be required to sign an Intergovernmental Agreement (IGA) with ODOT prior to receiving any project funds. The IGA with the state will detail the requirements for the use and management of requested funds.

Authorizing Authority Name:

Authorizing Authority Title:

☐ Electronic submittal was approved by the identified authorizing individual. No signature needed if checked.

Signature: Date:

30. Co-Sponsor Signature Authority Information

The signature below demonstrates support of this application on behalf of the Co-Sponsor:

Authorizing Authority Name:

Authorizing Authority Title:

Signature: Date:

If you have more than one Co-Sponsor, list further Co-Sponsors' submittal authority names and titles in the box below and ask those named to provide their signatures and the date signed by their names.

☐ Electronic submittal was approved by the identified authorizing individuals. No signatures needed if checked.

Save Application

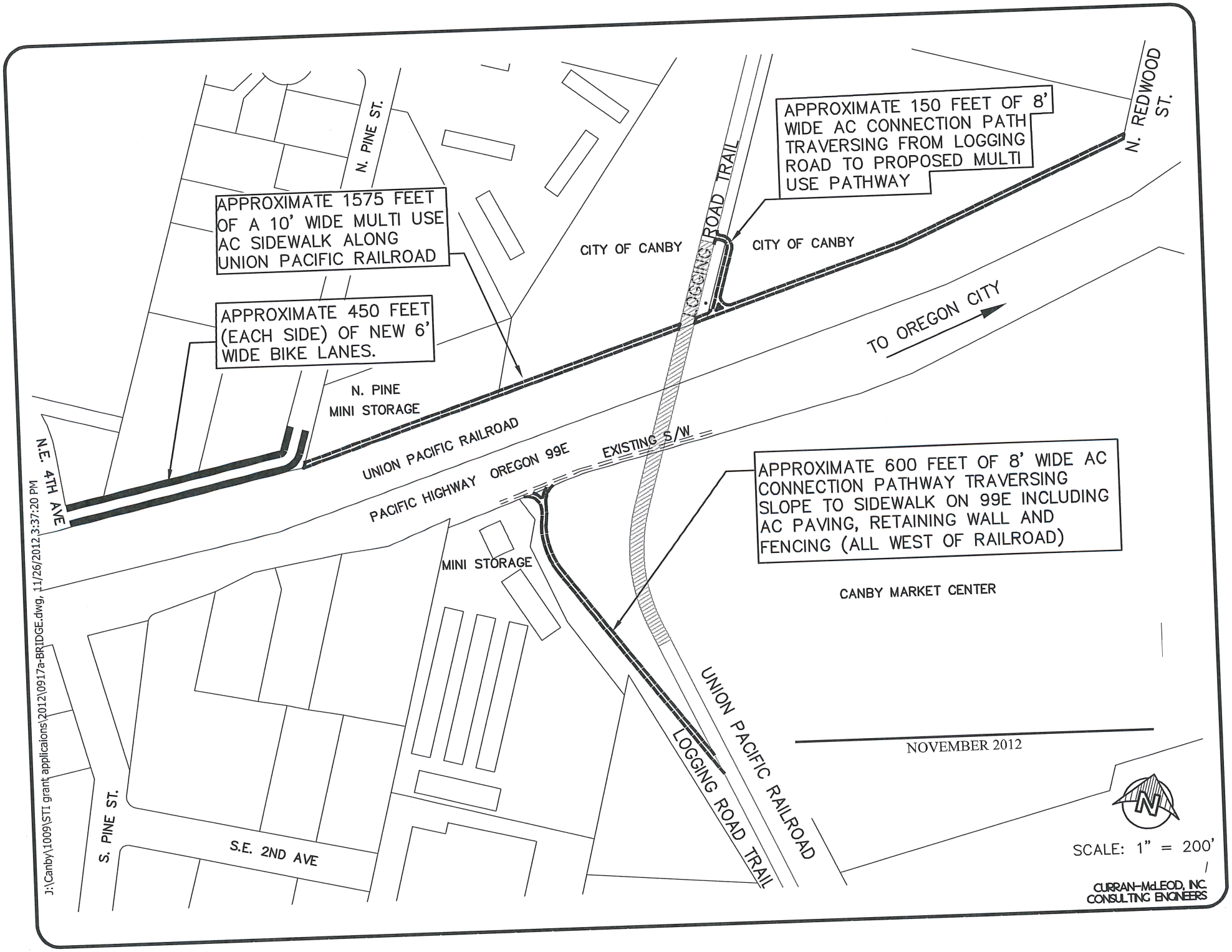
N. PINE ST.
APPROXIMATE 1575 FEET OF A 10' WIDE MULTI USE AC SIDEWALK ALONG UNION PACIFIC RAILROAD
APPROXIMATE 450 FEET (EACH SIDE) OF NEW 6' WIDE BIKE LANES.
CITY OF CANBY
LOGGING ROAD TRAIL
APPROXIMATE 150 FEET OF 8' WIDE AC CONNECTION PATH TRAVERSING FROM LOGGING ROAD TO PROPOSED MULTI USE PATHWAY
N. REDWOOD ST.
CITY OF CANBY
TO OREGON CITY
N. PINE MINI STORAGE
UNION PACIFIC RAILROAD
PACIFIC HIGHWAY OREGON 99E
EXISTING S/W
N.E. 4TH AVE
APPROXIMATE 600 FEET OF 8' WIDE AC CONNECTION PATHWAY TRAVERSING SLOPE TO SIDEWALK ON 99E INCLUDING AC PAVING, RETAINING WALL AND FENCING (ALL WEST OF RAILROAD)
MINI STORAGE
CANBY MARKET CENTER
UNION PACIFIC RAILROAD
LOGGING ROAD TRAIL
S. PINE ST.
S.E. 2ND AVE
NOVEMBER 2012
SCALE: 1" = 200'
CURRAN-McLEOD, INC.
CONSULTING ENGINEERS
J:\Canby\1009\STI grant applicaions\2012\0917a-BRIDGE.dwg, 11/26/2012 3:37:20 PM

CITY OF CANBY
PEDESTRIAN PATH CONNECTION TO HWY 99E OVERPASS
TYPICAL CROSS SECTIONS

NOVEMBER 2012

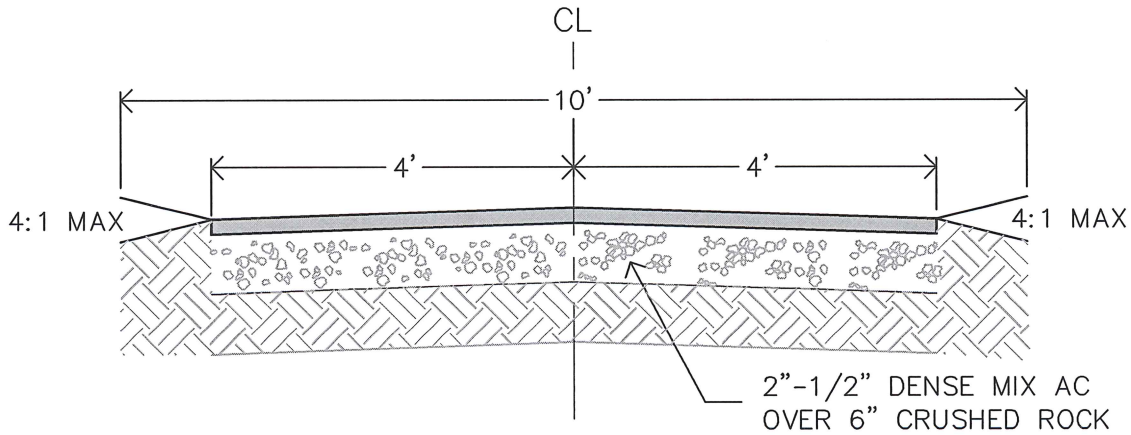

2 CONNECTION TO LOGGING ROAD

SCALE: N.T.S.

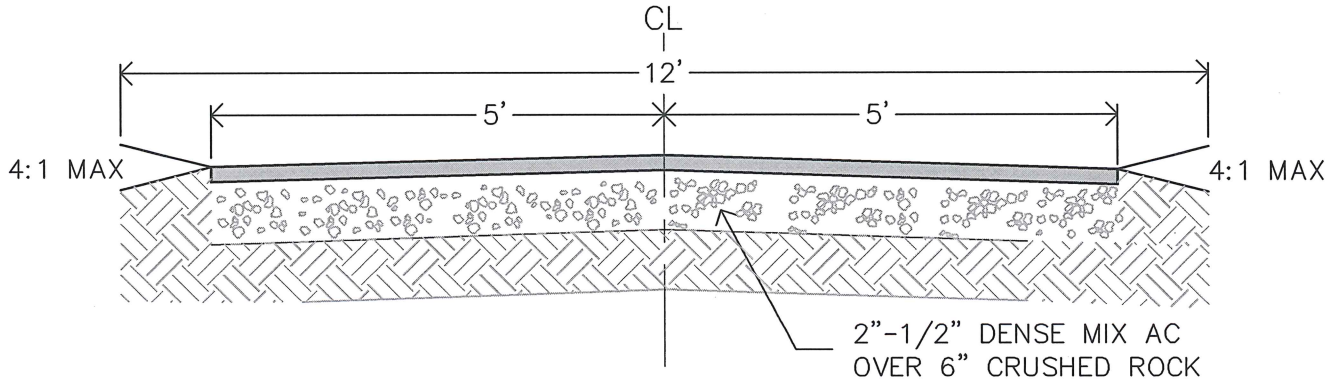

1 MULTI USE PATH

SCALE: N.T.S.

SCALE: N.T.S.

CURRAN-McLEOD, INC.
CONSULTING ENGINEERS

J:\Canby\1009\STI grant applicaions\2012\0917a-BRIDGE.dwg, 11/26/2012 3:25:03 PM

CITY OF CANBY
Pedestrian Path Connection to Hwy 99E Overpass
N Pine Street to N Redwood Street
Preliminary Cost Estimate
November 2012

No	Description	Quantity	Unit	Unit Price	Total Cost
1	Mobilization	All	LS	$20,000	$20,000
2	Clearing & Excavation	2,000	CY	$15/CY	30,000
3	Select embankment	1,000	CY	$25/CY	25,000
4	AC Path 8' (8" base 2" AC)	3,200	LF	$25/LF	80,000
5	Mini Storage Driveway Impr.	All	LS	$5,000	5,000
6	Retaining Wall along path,	2,500	SF	$20/SF	50,000
7	Railroad Fencing	1,700	LF	$40/LF	68,000
8	Private Property Fencing	2,000	LF	$26/LF	52,000
9	Restoration, signing	All	LS	$25,000	25,000
				Construction Subtotal	**$355,000**
				Engineering, Legal & Admin (15%)	52,500
				Contingencies (15%)	52,500
				TOTAL PROJECT COST	**$460,000**

On the north side of Highway 99E the pedestrian improvements would include extending the existing NE 4th Ave bike lanes along N Pine Street, then continuing east with an 8-foot bike path / pedestrian path that would cross under the bridge, and terrace up the bridge fill slopes to provide a connection to the Logging Road pedestrian Path, then continuing east to terminate at N Redwood Street with a connection to the existing bike lanes in Redwood. All improvements would be north of and not cross any existing rail lines.

Improvements on the south side of Highway 99E would include eliminating the current non-sanctioned pedestrian rail crossing located approximately 800 feet south of the highway, and constructing a joint use bike path / pedestrian path that would traverse down the west side of the bridge fill slope to connect to the sidewalk along 99E. All path improvements would be west of and not cross the existing rail lines.

November 20, 2012

ODOT STIP Enhance Application
ODOT Region 1
123 NW Flanders Street
Portland, OR 97209
ATTN: Jeff Flowers

RE: Canby 2015-2018 STIP Enhance Application

Dear Grant Selection Committee Members:

I am writing to encourage your support of Canby's application for grant funding of the Logging Rd Bike and Pedestrian Trail Bridge Path Connections. The Canby Parks and Recreation Advisory Board have been advocating for this connection for several years.

The Logging Road Path is a popular walking, running and bicycling trail that traverses our community from north to south. The Path crosses OR 99E via a grade separated bridge, but there is currently no trail connection to existing sidewalks on OR 99E which provide safe access to our commercial shopping districts and the Clackamas County Fair and Event Center. Currently trail users access the Fred Meyer shopping complex via a dirt path which leads to the railroad tracks. The crossing is not an approved at grade crossing so there are no safety devices, which makes it a dangerous crossing. This project would remedy this deficiency and create safe public ADA accesses to both the North and South sides of OR 99E.

The proposed bicycle and pedestrian connections would greatly enhance the value of our existing multi use trail. Therefore I encourage your support of this grant application. Please contact me if you have any questions.

Sincerely,

Ryan Oliver, Chairman
City of Canby Parks and Recreation Advisory Board