Building Enclosure Rehabilitation Guide:
Multiunit Residential Wood-Framed Buildings

Oregon Housing and Community Services

What We Do Matters!

TABLE OF CONTENTS

2 CONDITION ASSESSMENT 2-1

2.1 Assessment Process 2-1
2.2 Determining Appropriate Level of Effort..2-3
2.3 Level I – Desktop Assessment.....2-6
2.4 Level II – Risk Assessment.....2-8
2.5 Level III – Detailed Condition Assessment 2-11
2.6 Sampling..... 2-18
2.7 Commonly Problematic Details..... 2-18
2.8 Health and Safety..... 2-19
2.9 Interpretation of Condition Assessment Results 2-24
2.10 Budget/Costs Estimates..... 2-26
2.11 Sample Table of Contents of Assessment Report 2-29
2.12 Consultant Checklist 2-30

3 DESIGN 3-1

3.1 Introduction 3-1
3.2 Oregon Building Codes 3-2
3.3 Design Factors 3-3
3.4 Moisture Control Principles for Rehabilitation 3-5
3.5 Architecture & Zoning 3-14
3.6 Durability 3-14
3.7 Sustainability..... 3-15
3.8 Assembly Components and Concepts 3-16
3.9 Above-Grade Wall Assemblies 3-18
3.10 Below-Grade Wall Assemblies 3-28
3.11 Other Assemblies 3-31
3.12 Rehabilitation Program..... 3-33

4 CONSTRUCTION DOCUMENTS 4-1

4.1 Introduction 4-1
4.2 Code-Related Construction Concerns 4-1
4.3 Repair of Deteriorated Materials.....4-2
4.4 Construction Documents.....4-6
4.5 Construction Documents Stage – Checklist 4-8
4.6 Details.....4-8

5 BIDDING 5-1

5.1 Introduction 5-1
5.2 Implementation Approaches.....5-1
5.3 Front-End Documents.....5-3
5.4 The Bid Process.....5-4
5.5 Costs 5-7

6 CONSTRUCTION..... 6-1

6.1 Introduction 6-1
6.2 Administration.....6-2
6.3 Shop Drawings and Submittals 6-5
6.4 Quality Assurance 6-5
6.5 Cost Tracking.....6-9
6.6 Closeout Requirements 6-11

OCCUPANT SAFETY APPENDIX 6-12

6.7 SAFETY MEASURES FOR BUILDING OCCUPANTS DURING CONSTRUCTION 6-12

7 BUILDING ENCLOSURE QUALITY ASSURANCE PROCESS..... 7-1

7.1 Roles 7-1
7.2 The Process 7-2
7.3 Building Enclosure Design Checklist.....7-5

8 MAINTENANCE, RENEWAL & RESERVE8-1

8.1 Maintenance & Renewal Overview 8-1
8.2 Design Considerations 8-2
8.3 Why Maintain? 8-4
8.4 Maintenance Planning 8-5
8.5 Renewal Planning 8-6
8.6 Maintenance & Renewals Plans - Key Components.....8-5
8.7 Managing Maintenance & Renewals Plans - Key Roles.....8-10
8.8 Managing Maintenance & Renewals Plans - Processes.....8-11
8.9 Deferred Maintenance.....8-13
8.10 Reserve Studies 8-14

FOREWORD

Oregon Housing and Community Services (OHCS) is Oregon's housing finance agency, providing financial and programming support to create and preserve opportunities for quality, affordable housing for Oregonians of lower and moderate income. The current agency was created in 1991, when the legislature merged the Oregon Housing Agency with State Community Services. The coordination between housing and services creates a continuum of programs that can assist and empower lower-income individuals and families in their efforts to become self-reliant. OHCS administers federal and state antipoverty, homeless, energy assistance, and community service programs. OHCS also assists in the financing of single-family homes and the new construction or rehabilitation of multifamily affordable housing developments, as well as grants and tax credits to promote affordable housing.

In its ongoing efforts to maintain multiunit wood-framed residential buildings, OHCS recognizes an increasing need for guidance related to the building enclosure systems. Recent failures leading to costly repairs and re-repairs emphasize this need. This guide has been prepared as one part of an ongoing effort to provide that guidance to the design and construction of wood-framed, multiunit residential buildings.

This edition of the guide is intended to be a living document and will be updated as feedback is received and as more current technical information becomes available. Users are invited to submit comments and suggestions to OHCS.

ACKNOWLEDGEMENTS

This guide was prepared by RDH Building Sciences, Inc. Other sources are referenced within the guide to support the presented topics. The analysis, interpretations, and recommendations are those of the consultants and don't necessarily reflect the views of OHCS.

DISCLAIMER

Care has been taken to review the information summarized in this guide, but no attempt has been made to replicate or check experimental results or to validate calculated data. Neither OHCS nor the authors warrant or assume any liability for the accuracy or completeness of the text or drawings or their fitness for any particular use. It is the responsibility of the user to apply professional judgment in the use of the information contained in this guide, to consult original sources, or, when appropriate, to consult with an architect or engineer who is a specialist in the field of building science.

CHAPTER CONTENTS

1 INTRODUCTION..... 1-1

1.1 Background 1-1
1.2 Other Documents 1-1
1.3 Rehabilitation Process.....1-1
1.4 Cost Effective 1-1
1.5 The Guide.....1-1

TABLE OF FIGURES

Figure 1-1 Building Enclosure Rehabilitation Process 1-3

THIS PAGE INTENTIONALLY LEFT BLANK

1 INTRODUCTION

1.1 Background

Oregon Housing and Community Services (OHCS) has been and continues to be a significant financing agency for affordable housing in the state. With an interest in over 500 existing buildings, OHCS has significant stake in the associated ongoing maintenance, performance, and rehabilitation efforts. In recent years, OHCS has recognized significant funding hurdles associated with the rehabilitation of deteriorating building enclosures, primarily as a result of water intrusion.

Inconsistencies in the way in which consultants assess performance problems, make recommendations for repair, detail and specify repairs, and implement larger rehabilitation projects are some of the factors contributing to the need for this guide.

Due to this increasing need for rehabilitation and the inconsistencies noted above, OHCS has commissioned the development of this guide to lay a foundation for best practices in the rehabilitation of building enclosures for multiunit wood-framed residential buildings.

1.2 Other Documents

This guide is the first in a two-part publication. This current guide addresses existing buildings. The other companion guide will address best practices for the design and construction of the building enclosure for new multiunit wood-framed residential buildings. The intent is to develop and publish the companion guide about one year following the publication of this guide.

1.3 Rehabilitation Process

The process of assessing and rehabilitating a wood-framed building has many stages, and owners must make decisions at each stage, guided by their consultants input. To complicate the process, the building is often occupied during the work. The flow chart in Figure 1.1 outlines the overall rehabilitation process and lists some of the key tasks that could be involved at each stage. This guide is generally organized to follow this flow chart.

It is important to recognize that generally consultants will be required to assist owners throughout this process, not just at any one stage. The makeup of the consultant team must reflect the particular physical needs of the building as well as the process for each stage. For example, this may mean different individuals being involved during the evaluation and design stages.

1.4 Cost Effective

The context of the term *cost effective* is of key importance to decisions made with the assistance of this guide. The term is subjective and depends upon many parameters, not the least of which being the anticipated life span of the repair or interest in the property. OHCS has established a 30-year life span to clarify the overall intent of the rehabilitation program. This expectation for extended interest in the rehabilitated building enclosure is the context for this guide.

Consultants must be able to present a range of alternatives to the owners, along with the associated costs and performance risks. Owners make the decisions regarding selection of alternatives, and consultants must assist owners in understanding the levels of risk associated with each alternative. Furthermore, owners must understand that a decision to pursue a certain strategy in rehabilitating the building enclosure is distinct but related to the value of potential claims they may have against parties involved in the original design and construction of the building.

1.5 The Guide

This guide is intended to provide guidance, primarily to owners and design professionals, for the assessment and rehabilitation design of the building enclosures of multiunit wood-framed residential buildings in Oregon. This guide may also be useful for builders, consultants, and contractors and should also be useful for buildings

of other occupancies, providing that they do not exceed certain height, size, and occupancy limitations.

Although this guide is intended to reflect good practice in general, its primary focus is on the management of heat, air, and moisture transfer, since moisture-related performance problems prompted this initiative. This guide therefore does not deal specifically with structural, acoustic, fire, and a variety of other parameters that may also have an impact on the design of the building enclosure. These performance criteria must be considered together with the heat, air, and moisture control provisions presented here.

This guide reflects current good practice in design and construction of building enclosures. Good practice in the context of this guide means the balanced application of currently available technology, materials, and normal skilled workmanship to the design and construction of affordable and durable housing.

This guide is not intended to be a research paper or an exploration of innovative technology. Although some of the proposed assemblies have limited field performance history in Oregon, they are based on sound principles and are believed to be conservative for their intended uses. Most of the assemblies are being used successfully in the United States and other parts of the world. As industry professional take on further research initiatives, better understanding of performance of the assemblies may merit a review of some of the technology presented in this guide.

This guide is not intended to replace professional advice. When information presented in this guide is incorporated into buildings, it must be reviewed by knowledgeable building enclosure professionals and reflect the specific unique conditions and design parameters of each building. Use of this guide does not relieve designers of their responsibility to comply with local building codes, standards, and bylaws with respect to the design and construction of the building enclosure.

This guide is not intended for use with buildings of noncombustible construction or those of mid-rise timber construction. The different materials and exposure conditions in these buildings often dictate quite different and more rigorous approaches to moisture management than are presented in this guide. Furthermore, this guide is not intended to be applied directly to the design of newly constructed wood-framed buildings. These projects may require quite different detailing.

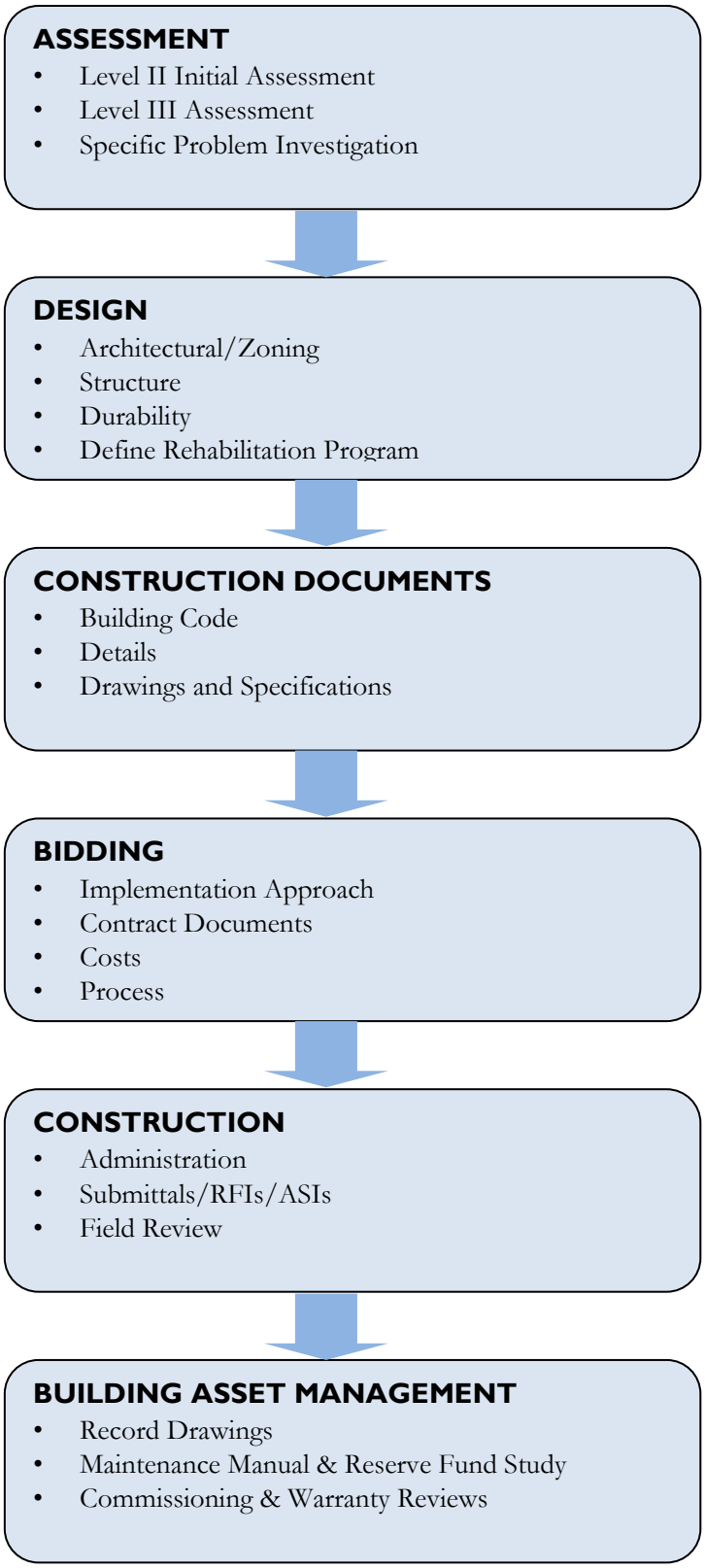

Figure 1-1 Building Enclosure Rehabilitation Process

CHAPTER CONTENTS

2 CONDITION ASSESSMENT 2-1

2.1 Assessment Process 2-1
2.2 Determining Appropriate Level of Effort..2-3
2.3 Level I – Desktop Assessment.....2-6
2.4 Level II – Risk Assessment.....2-8
2.5 Level III – Detailed Condition Assessment 2-11
2.6 Sampling..... 2-18
2.7 Commonly Problematic Details..... 2-18
2.8 Health and Safety..... 2-19
2.9 Interpretation of Condition Assessment Results 2-24
2.10 Budget/Costs Estimates..... 2-26
2.11 Sample Table of Contents of Assessment Report 2-29
2.12 Consultant Checklist 2-30

APPENDICES

Appendix 2A Key Visual Symptoms of Deficiencies

Appendix 2B Commonly Problematic Details

Appendix 2C Photograph References for Appendix 2B

Appendix 2D Sample Occupant Survey

TABLE OF TABLES

Table 2-1 Assessment Level Descriptions.....2-5

TABLE OF FIGURES

Figure 2-1 Building Valuation Model Equations.....2-7
Figure 2-2 Sherman-Dergis Formula.....2-7
Figure 2-3 NACUBO Formulas.....2-8
Figure 2-4 Infrared Image of Air Leakage.....2-10
Figure 2-5 Infrared Image of Roof Membrane.....2-10
Figure 2-6 Approximate Seasonal Moisture Content Ranges and Thresholds.....2-12
Figure 2-7 Fungal Growth in Wood.....2-12
Figure 2-8 Presentation of Moisture Probe Results 2-14
Figure 2-13 Dark Stains on Underside of Balcony...2-20
Figure 2-14 Deteriorated Balcony Framing and Sheathing 2-20
Figure 2-15 Framed Balcony Guardrails.....2-21
Figure 2-16 Wood Decay in Framed Guardrails 2-21
Figure 2-17 Cracked and Bulging Stucco at Floor Line.....2-21
Figure 2-18 Decayed Rim Joist.....2-22
Figure 2-19 Decayed Walkway Post with Temporary Shoring Visible Behind.....2-22
Figure 2-20 Establishing Scope of Rehabilitation 2-28

THIS PAGE INTENTIONALLY LEFT BLANK

2 CONDITION ASSESSMENT

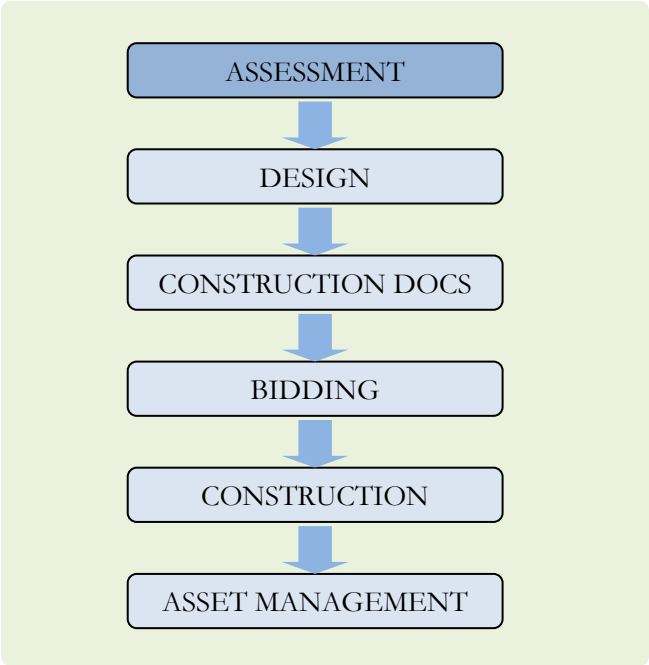

2.1 Assessment Process

2.1.1 Introduction

There are numerous guides available describing the general approach, methodologies, and purposes to performing a property condition assessment. This chapter builds upon these established methods and provides specific tools for the assessment of building enclosures for multiunit wood-framed buildings. This guide differs from some of the referenced guides in that it is focused on the building enclosure. Further, this guide assumes that the need for assessment is established, and it therefore takes the next step at establishing the most appropriate plan and procedures for condition assessment and makes recommendations as to the level of assessment necessary. As is true with many such undertakings, it is imperative that the desired results be paired with appropriate scope and that all parties involved are well versed in this scope and expectations of results. Of key importance is the consultant who will be performing the assessment.

2.1.2 Reference Documents

There are a number of useful document available as background:

- ASCE 30-00 – Guideline for Condition Assessment of the Building Envelope
- ASTM E2018 – Standard Guide for Property Condition Assessments: Baseline Property Condition Assessment Process
- ASTM E2128 – Standard Guide for Evaluating Water Leakage of Building Walls
- NRC-CNRC – Protocols for Building Condition Assessment
- Canada Mortgage and Housing Corporation – Building Envelope Rehabilitation: Consultant's Guide
- Standard and Poor's Structured Finance Ratings Real Estate Finance Property Condition Assessment Criteria (S&P PCAC)

2.1.3 Industry Terminology

Many building portfolio managers may be familiar with the terminology presented below. The consultant performing the condition assessment should also be familiar with these terms.

Facility Condition Assessment (FCA) is a term often utilized to describe the general procedure of assessing a building facility. Whereas an FCA may be performed on one building or a portfolio of buildings, a Property Condition Assessment (PCA) is typically reserved for a single building assessment. Once a PCA is performed, a consultant will typically produce a written report of his or her findings, called a Property Condition Report (PCR).

The consultant performing the enclosure assessment as described in this guide should recognize that this makes up only a portion of the effort required to produce a complete PCA or PCR for a building.

Those who perform FCAs and PCAs will often utilize the results to facilitate financial models for baseline facility and property reserves, operating budgets, and maintenance budgets. The Facility Condition Index

(FCI) is a commonly used indicator of a building's physical condition as a function of its fiscal "health". The FCI is the ratio of a building's current total cost of repairs due to deferred maintenance and renewals work, or "catch-up" costs, to its overall replacement cost:

$$FCI = \frac{\text{Total Cost of Repairs}}{\text{Replacement Cost}}$$

Although the FCI is intended as a property or facility index, it may also lend value to the enclosure consultant to establish an index for this particular subset of assets.

2.1.4 Levels of Assessment

The level of assessment undertaken varies depending on the intended use of the information. Of utmost importance is matching the needs of the owner with the level of diligence and effort for the assessment. The owner's needs may differ between projects with respect to:

- Extent and severity of damage
- Accuracy of cost estimates for remedial work
- Level of confidence in causation of damage
- Refinement of rehabilitation alternatives

This guide presents three assessment levels. However, the consultant should note that this division is somewhat arbitrary, and any particular project may require selective use of portions of each assessment level.

Short descriptions of each level of assessment are represented below, whereas a more in-depth description of each is provided in subsequent sections of this chapter.

- Level I – Desktop Assessment
  Primarily involves the use of data provided by others, including maintenance records, manuals, and asset lists. This approach is often best suited for portfolio assessments where broad-spectrum understanding of assets and funding mechanisms is required. Theoretical models are often created based on Level I assessment, priorities are established, and then further information is gathered through a Level II or III analysis if necessary.

- Level II – Risk Assessment
  Relatively short duration, visual-only assessment to understand the actual materials and assets on the building and the visual appearance of serviceability. This approach is often best suited for annual update reviews or other cursory evaluation purposes.

- Level III – Detailed Condition Assessment
  Thorough, longer-duration assessments to understand and establish the actual performance and condition of the assets and materials on a building. This method will include physical removal of materials and may include field testing to established performance of assemblies in concealed areas.

2.1.5 Qualifications of Consultant

The final quality of the assessment will ultimately depend upon the ability of the consultant to analyze and develop rational and useful conclusions based on the data generated. Although each of the industry standard documents listed in Section 2.1.2 contains its own description of consultant qualifications, the common thread suggests that the consultant be competent, be experienced, and use professional judgment. This guide suggests qualifications based significantly on those presented in the S&P PCAC guide. These qualifications are summarized below. The consultant should provide background reference to confirm all requirements.

Company Experience

- Minimum of 3 years experience providing enclosure assessments on similar buildings of similar scale.
- Minimum of 12 building enclosure condition assessments of similar size and scale.
- Minimum of 3 building enclosure condition assessments each year for the past 3 years.
- If any pending litigation or claims against the firm exists with respect to professional services, these should be disclosed prior to engagement of services.
- The firm performing the work shall designate one representative to be the responsible Professional in Charge (PIC) for overall review and quality control of all aspects of the assessment process.

Personnel Experience

- The PIC shall possess a professional engineer's license or architectural registration; no exceptions are permitted.
- Four or more years of experience in specifically performing building enclosure evaluation and assessment.

Insurance Requirements

All consultants must carry professional liability insurance coverage without exclusions related to building enclosure work and be able to provide certificates of such insurance. Specific values of coverage should be determined between the contracted agencies in advance of engagement.

Conflict of Interest

The consultant should not be affiliated with other agencies involved in the purchase or sale of the property, nor shall the consultant have affiliation with the buyer, seller, or other parties who have financial interest in the results of the assessment. Where potential conflicts of interest exist, the consultant should provide disclosures.

References

The consultant should be able to provide three references with names, telephone numbers, company, and title who are able to opine on the firm and the PIC's ability to perform the enclosure assessment. References should ideally include clients of similar type, consumer associations, mediators, or others who can provide relevant reference on the consultant's ability to perform the proposed work.

2.2 Determining Appropriate Level of Effort

Once there is a determination to perform an assessment, the scope and level of effort must be established. It is of the utmost importance that both the consultant and the owner have a clear understanding of the scope, intended function of the report, and expectations of results. Further, the consultant and owner should understand their respective roles:

- **Owner** - It is the owner's obligation to articulate the desired outcome of the assessment, determine the needs of the assessment, and provide the consultant with well-defined expectations and budget requirements. The owner should understand the limitation of assessment options.

- **Consultant** - It is the consultant's obligation to assist the owner in understanding the limitations of the assessment options, the expected outcomes, and the risks associated with various methodologies. The consultant must determine the appropriate level of service based upon the owner's desired results and expectations.

Table 2-1 provides a summary of the probable purposes, potential deliverables, relative accuracy, and general effort requirements of each of the three assessment levels described previously.

There are generally two paths to determining the appropriate or necessary level of assessment:

- Scope-driven
- Results-driven

In a scope-driven assessment, the owner will determine the level of service based primarily upon the selected purpose, desired deliverables, required degree of accuracy, budget limitations, and other control factors. The consultant will work with the owner to understand these criteria and will develop the assessment plan accordingly. Based on this predetermined scoping, the consultant will perform the assessment and provide the appropriate deliverable reports.

In a results-driven assessment, the owner will often begin with a desired set of deliverables based on a specific purpose but may be less clear on the necessary level of certainty. In this case, the consultant may begin with a lower-level service and adjust the scope upward

based on the findings. A classic example is the Risk Assessment that returns visual observation of likely significant leakage problems. Although the owner may have originated the assessment to gain a general understanding of maintenance requirements, he or she may subsequently require additional detailed condition assessment or investigative effort to better identify the extent and causes of the evident leak problem. This ratcheted approach is relatively common. The consultant must use care to clearly outline the expectations of both the lower- and higher-level services, rather than rely upon the anticipated ratcheting of scope.

The need to utilize a results-driven assessment or to ratchet a lower-level assessment to a higher-level one is often based upon three factors:

- Quality of data
- Evidence of concealed problems
- Risk of unknown deficiencies

2.2.1 Quality of Data

At the conclusion of the Level I assessment, the consultant must determine if the available and collected data are sufficient and appropriate to provide the owner with a report that fits the pre-established intent and Owner objective and must qualify the work as to its limitations. Based on the findings, the Owner may determine that a Level II assessment is required. The consultant will often make a recommendation for Level II assessment based on their findings.

2.2.2 Evidence of Concealed Problems

At the conclusion of a Level II assessment, there is often evidence of a concealed problem. Most often this is related to concealed water leakage into walls or ceilings. This evidence could be in the form of a visual observation or a written document of unresolved poor performance history. If there is any such indication of concealed problems, additional investigation is required if the extent, cause, and appropriate repair strategy is to be determined. Level III assessment techniques may then be implemented to better define such problems. This more detailed assessment may be limited to local areas of concern or to the whole building, depending upon the extent of evidence. Some common examples of concealed problems or their indicators are:

- Deterioration due to window leakage.
- Deterioration due to deck or balcony leakage.
- Deterioration due to internal drain leakage.
- Deterioration due to roof leakage.
- Moisture accumulation in wall cavities due to interior high humidity.
- Moisture accumulation in walls and ceilings due to excessive air movement.
- Mold growth due to moisture accumulation.
- Cracks in drywall.
- Deflection due to building movement.
- Stains or efflorescence on soffits or balcony surfaces.

Table 2-1 Assessment Level Descriptions

	LEVEL I	LEVEL II	LEVEL III
EFFORT	• Limited (hours)	• Variable (days)	• *Significant (days-weeks)*
ACCURACY	• Rough guess	• Qualitative analysis • Educated guess • No knowledge of concealed conditions	• Qualitative and quantitative analysis • Definitive knowledge of concealed conditions in sample areas • Extrapolated knowledge based on definitive sampling
DELIVERABLES	• High-level report • Assembly age and LCC • Capital needs planning for portfolios	• Risk assessment • Maintenance development/ planning • Life Cycle Costs (LCC)	• Forensic report • Rehabilitation scope identification
PURPOSE	• Overview of assemblies • Generalized life expectancy • Generalized Life Cycle Costing (LCC) • Order of magnitude capital needs planning • Portfolio planning	• Detail description of assemblies and materials • Physical visual observation of conditions • Opinions of needs for repair and rehabilitation • Maintenance manual and	• Knowledge of mechanisms and extent of deficiencies • Knowledge of unique vs. systemic deficiencies • Knowledge of concealed conditions • Well-defined scope and costs

2.2.3 Risk of Unknown

Interested parties must carefully examine the risks that may be associated with leaving concealed conditions unknown. Wood-framed construction is especially sensitive to unknown moisture-related deficiencies, as they can affect structural components.

In the following two examples, the particular interest of those commissioning the assessment may influence the level of assessment undertaken.

Example: During the visual assessment of a 25-unit building, there is some evidence of early deterioration of sealants at window perimeters. There is no visual evidence of leakage to the interior, but exterior paint on lap siding is beginning to stain just below the sill/jamb corner. Two occupant questionnaires reported some minimal swelling of wood sills. Visual review reveals minor staining on sills in 5 units, with little evidence of significant decay or continued leakage.

Case 1: The building is being assessed as part of an annual maintenance program. The occupant will likely report an interior finish problem and the maintenance staff will then repair the symptom without addressing the cause. In this case, destructive testing may not be initiated until significant evidence of assembly failure is presented. The level of assessment is responding to the occupants' tolerance for risk and therefore concealed damage could continue to occur.

Case 2: The building is being assessed as part of a presale due diligence process. The buyer expects to know what he or she is purchasing and the condition of its assets. Knowledge of the actual condition and current performance of the siding and window installation in this case becomes more critical, as concealed deficiencies and window leakage may result in the purchaser being exposed to large future repair bills. In this case, Level III assessment may be initiated in response to the purchaser's awareness of future risk. Exploratory openings may reveal window leakage, and subsequent analysis will identify appropriate costs associated with repairs.

2.3 Level I – Desktop Assessment

Desktop method assessments are unique in that they do not include any physical or visual contact with the building by the consultant. This assessment type is often reserved for multiple building portfolios and may be performed in conjunction with Level II or Level III assessments to validate simulation models. Level I assessments are also more often performed for whole-building assessments of all systems rather than for only the building enclosure. However, the methodologies may be applied for enclosure assessment for building portfolios as well.

As with other methods, desktop methods require specific and unique knowledge and experience. Level I assessments are done almost exclusively for identifying overall maintenance and renewal funding levels as they do not provide sufficient detail to identify specific projects on specific buildings. These methods should therefore not be used if building-specific information and actual assembly performance is required.

2.3.1 Assessment Models

All desktop methods rely heavily on existing documentation such as drawings, equipment lists, and repair histories. The quality and quantity of the documentation determines the selection of a particular desktop methodology or hybrid of techniques, which are classified into the following broad categories:

2.3.2 Building Valuation Models

These models estimate the maintenance and renewal requirements of the building as a function of the Current Replacement Value (CRV). The replacement value is typically determined as a function of the gross square floor area of the building multiplied by the square foot rate for the specific building type. Figure 2-1 below contains two examples of building valuation models:

Annual M&R = Y% x CRV

Where the building constant Y is a function of any number of industry benchmark values.

Annual M&R = MCF x CRV

Where,

MCF = Maintenance Cost Factor, based on construction type

Figure 2-1 Building Valuation Model Equations

The models are easy to use, easy to adjust, require minimal data, and generally receive support in the building asset management field as a general approximation for facility recapitalization budgeting. However, they do not produce accurate and defensible results, since building reproduction value is not always a good predictor of maintenance costs, particularly for the building enclosure. Furthermore, there is no commonly accepted standard for reinvestment thresholds based on building reproduction value. The models are formula-based and do not consider building life cycles.

2.3.3 Life Cycle (Actuarial) Models

Life cycle estimation models depend on partitioning a building or facility into systems to establish preventative maintenance or repair frequencies. As such, they often lend themselves well to building enclosure assessment. They derive maintenance requirements based upon an independent determination of the life cycle of each system. Some examples include:

- Sherman, Douglas R., and William A. Dergis, 1981. *A Funding Model for Building Renewal.* In Business Officer (February): pp.18-21
- Biedenweg, Frederick M., and Robert E. Hutson. 1981. *Before the Roof Caves In: A Predictive Model for Physical Plant Renewal.* In Management Systems for Higher Education Planning and Budgeting. Denver, CO: National Center for Higher Education.
- Phillips C., Jr., Cushing. 1986. *Facilities Renewal: The Formula Approach.* Proceedings of the 73rd. annual meeting of American Public Power Association, July.

Annual M&R = 2/3 BV x BA/n

Where,

2/3 = Building Renewal Constant
BV = Current Building Value
BA = Corrected Building Age
n = Age-Weighted Constant

Figure 2-2 Sherman-Dergis Formula

Industry-accepted statistical averages of useful service lives for particular materials and assemblies are levered. These values are available based on buildings of similar type and can therefore be considered as an actuarial study.

The consultant should recognize that life cycle models require large amounts of detailed data for each building or facility. It is therefore facility-dependent, and universal simulation applications are not practical. The models assume that a detailed facility inventory exists that requires the consultant to have knowledge of construction estimating techniques. They do not provide a detailed evaluation of the building, nor do they account for non life cycle-based factors (i.e., unpredictable failure). As such, these models are not useful as a basis for project initiation or approval.

2.3.4 Mathematical (Parametric) Models

These models use mathematical expressions based on quantifiable variables. Annual maintenance and renewal funding requirements are estimated with a mathematical equation. The formulas are typically algebraic, regression analysis, or simulation based on historical data. The expressions range from simple single-variable equations to very complex algorithms.

Whereas life cycle models require data on the benchmarked useful service life of systems within a building, mathematical models can either exclude this parameter or include additional parameters. Some of the additional parameters used in the mathematical expressions are: location/climate zone, age, size, type, construction costs for varied systems, facility operating budgets, and condition data.

Two examples of mathematical models include:

- National Association of college & University Business Officers (NACUBO). 1991. *Managing the Facilities Portfolio: A Practical Approach to institutional Facility Renewal and Deferred Maintenance.*
- Monterecy, O.P. 1985. *A Formula Budgeting Model and Framework for Controlling Physical Plant Deferred Maintenance: An Empirical Analysis of Public Schools in Rhode Island.* Doctoral Dissertation.

Figure 2-3 is an example of the NACUBO model.

$$B_n = (B_n-1)(1+I_n+D_n) + (V_n)(P_n)-F_n$$

Where,

B_n = Backlog at end of year n
V_n = Current Replacement Value at end of year n
I_n = Inflation rate
D_n = Backlog deterioration rate
P_n = Plant deterioration rate
G_n = Average plant growth rate
F_n = Planned funding

Annual M&R = [sum(MS%) x (RC%] x CRV

Where,

MS% = Major system % of CRV
RC = Repair Cost % of CRV
CRV = Current Replacement Value

Figure 2-3 NACUBO Formulas

These methods are typically more data-intensive than the life cycle models, and some of the data can be difficult to obtain. Consultants often need to make assumptions based on condition assessments performed on buildings with similar attributes.

Mathematical models are typically the most defensible of the three types of desktop assessments and the assumptions in the models can be validated through a subsequent condition assessment at Level II or Level III.

2.4 Level II – Risk Assessment

2.4.1 Interviews

The people who live with the building the most and who are responsible for maintaining it are often the best initial sources of information. Any assessment should therefore begin with a process of interviewing the building occupants as well as existing maintenance and ownership personnel. The information should be collected and summarized in an appropriate format. The format of the interviews will be case-dependant and will be subject to the consultant's professional judgment. In some circumstances, the interview may be an informal site walk with the maintenance staff, while in others; it may be a series of one-on-one formal discussions with owners, construction contractors, repair companies, service contractors, and vendors. If available, the consultant should discuss performance history with ownership and maintenance personnel and should review copies of previous reports, photographs, and records of prior repairs.

2.4.2 Occupant Surveys

The occupants generally have a good understanding of the day-to-day workings of the building. When the building is occupied, a survey with questions specific to the building enclosure should be distributed to the occupants. An example survey is provided in Appendix 2D. Questions should be tailored to the particular project and should be posed for layperson comprehension. For example, if there are flat roof decks over living spaces, the questionnaire should ask specifically if there has ever been evidence of leakage in the ceilings directly below. Response formats should be

simple and should avoid the need for a lengthy written response. Questions related to condensation and air leakage are also helpful when determining the overall level of comfort and livability of a space.

Occupant surveys are useful only when they are responded to. The consultant should work directly with the property manager to determine the best distribution method (such as e-mail, posting, door-to-door, handouts).

The consultant should also bear in mind that the level of response itself can be an indicator of the level of performance, since many occupants will simply chose to ignore these surveys if they are not bothered by their living conditions. Caution is necessary in this respect, as lack of response may be a function of inadequate distribution or response time and should not be presumed to be a lack of deficiencies. Rather than a true representation of the overall performance of the building, the occupant survey is often best used as a tool to identify good starting points for further evaluation.

2.4.3 Document Review

Because of the relatively cursory nature of a Level II field assessment, a good understanding of the original building enclosure design intent is of significant value. The consultant should make reasonable effort to obtain architectural design drawings and as-built construction drawings. Warranty and maintenance literature is also useful when as-built drawings are not available or product identification is unclear.

Even a brief review of architectural drawings and specifications can often identify critical detailing areas for later visual review. Drawings should be used to highlight physical locations that require special attention while on site.

The consultant does not need to perform a rigorous evaluation of the drawings. However, review of the drawings prior to site observation can provide a general indication of the sensitivity of the assemblies to various sources of moisture and indicate a general quality of the details.

2.4.4 Visual Examination

The visual examination or "walk-through survey" is a key aspect of the Level II assessment. As such, the experience level of the person physically performing the visual assessment is critical. The building should be evaluated in three parts.

- General Observation should identify overall assemblies, exposure of assemblies to the exterior environment, material types, and the interfaces between these. The assemblies and components reviewed should include roofs, walls, windows, grading (i.e., soil, concrete, etc.), balconies and decks, exposed-column construction, overhangs, gutters, planters, below-grade structures, and accessory structures. This portion of the assessment supplements the document review effort, as well as provides opportunity to verify the inventory of existing components on the building.

- Exterior Observations will evaluate the physical condition of each of the assemblies and components identified in the General Observations section. The consultant should closely review physical attributes of materials: effective aging, staining characteristics, evidence of wetting patterns, and the stage of deterioration. The consultant should then estimate the continued serviceability of the materials. Care should be taken to evaluate the interfaces between assemblies, such as deck-to-wall or roof-to-wall interfaces. Sections later in this chapter provide typical details for review.

- Interior Observations will help to determine the extent to which the exterior enclosure is managing moisture movement. The consultant should pay particular attention to evidence of water leakage around window perimeters, at base of wall (at grade), at ceiling lines (upper floors), at walls near deck or balcony interfaces, at ceilings below roofs, and at entry and balcony/deck door thresholds. The consultant should utilize either hand-sketched or copied floor plans of units, along with a legend of typical observations for later correlation between exterior and interior observations. Although preliminary site planning is important for all aspects

of the assessment, it is critical for interior observations since access may be tightly scheduled and revisiting missed areas may be difficult when individual occupant schedules are considered. Interior assessment should also include verifying the presence of ventilation and interior moisture control measures, including recalculating fans, bathroom and kitchen fans, or whole-house fans.

2.4.5 Thermography

Thermography has increasingly become a useful diagnostic tool. However, like any other high-technology tool, the user must be well-versed in its operation, able to effectively interpret findings, and understand the limitations of results.

Infrared cameras detect surface temperatures. Although this can be an extremely useful tool that can often correlate temperature to moisture (especially in roofing applications), misinterpretation is prevalent. Temperature variations can result from thermal bridging, air leakage, or moisture storage. Only experience and understanding of building physics can effectively allow the consultant to distinguish between these sources of thermal anomalies and interpret the results. Readings are affected by exterior and interior temperatures, air pressure differences, and surface heat reflection from natural and other lighting sources. The images below are representative of the type of results derived from thermographic imaging. In Figure 2-4 below, we see colored red/orange/yellow zones that indicate warm air leakage and thermally inefficient window frames.

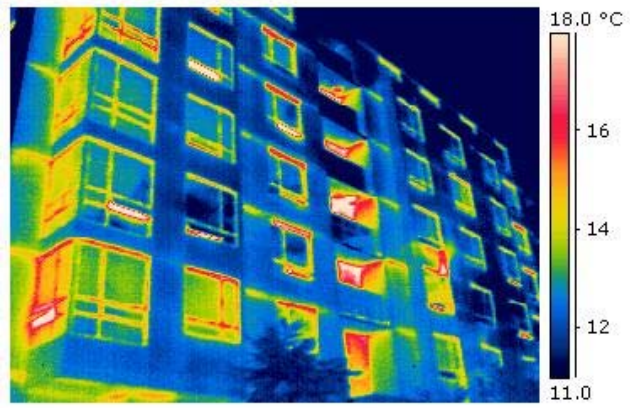

Figure 2-4 Infrared Image of Air Leakage

In contrast, the warm areas in Figure 2-5 below likely indicate water leakage or other moisture accumulation below the roof membrane.

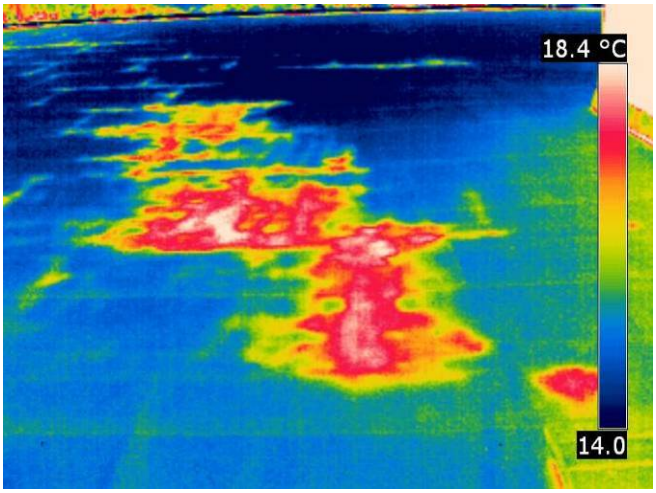

Figure 2-5 Infrared Image of Roof Membrane

Electrical Capacitance Survey and Nuclear Radioisotopic Thermalization are other nondestructive techniques utilized to identify moisture below roofing membranes. These are specialized techniques that require the involvement of trained contractors.

2.4.6 Moisture Content Measurement

See discussion in Level III Assessment below.

2.4.7 Odor

An experienced consultant or canine assistant can often identify odors within interior spaces that can be strong indicators of molds or other decay fungi. Although odors should never be used as a sole identifier of moisture-related problems, they can often be an indicator of poor ventilation and can be used as a tool to help identify the need for further evaluation.

2.5 Level III – Detailed Condition Assessment

2.5.1 Moisture Content Measurements

With the exception of visual observation, moisture content measurement of wood components of the building enclosure is the most widely used assessment technique. Moisture measurement instruments are generally classified as Resistance (pin) type or Electromagnetic Wave (no-pin) type. Each has its virtues and limitations.

Pin meters work by direct insertion of metal conductor pins into the wood substrate. To measure the moisture content of wood sheathing, two small holes are drilled through the cladding and two electrically isolated pins are inserted into the substrate. The device uses electrical resistance to measure the moisture content of the wood. These readings are affected by temperature, species, grain orientation, and preservative chemicals.

No-pin meters are used by sweeping the device over the surface of the cladding. The device uses electromagnetic waves to assess the moisture content of the underlying materials. No-pin devices are less affected by temperature, grain direction, or chemical presence but are affected by depth to sheathing, species, wood density, and surface textures.

One clear advantage of pin-type meters is that they allow the consultant to "feel" the substrate during pin insertion, which is often more telling than the readings themselves.

Because of the uncertainty and difficulties with accuracy based on a number of typically unknown factors (species, grain, etc.), moisture survey readings are better utilized as a relative, rather than absolute, indicator of moisture presence. For example, if a consultant finds that a number of field measurements on a relatively dry day in the fall result in readings around 17%, and some measurements below a window corner result in readings around 24%, the consultant can conclude that an anomaly exists and warrants further review. On the other hand, if most measurements in the field of a wall result in readings around 22% on a wet day in the winter, and readings below a window sill return results of 24%, it may be more difficult to conclude that there is a problem.

Figure 2-6 illustrates typical seasonal moisture content ranges for wood sheathing within a wood-framed rainscreen wall in coastal British Columbia, Canada, and can be extended as similar to coastal Oregon. This information is based on monitoring data from *Performance Monitoring of Rainscreen Wall Assemblies in Vancouver, British Columbia (Monitoring Study)*. In regions east of the Cascade Mountains in Oregon (Climate Zone 5B), equilibrium moisture contents would be a few percentage points lower and similar readings may be more indicative of moisture problems (e.g., a reading in the cautionary yellow zone in Climate Zone 5B may in fact be similar to a "Dangerous – Orange" reading in Climate Zone 4C). Normal, cautionary and dangerous ranges were developed from field measurements and computer modeling based on commonly accepted thresholds for wood products and decay resistance testing on sheathing products (*FPInnovations, 2010*).

The seasonal fluctuations shown in Figure 2-6 relate to the sorption isotherm of the wood, or the relationship between the moisture content and the relative humidity (RH). For wood sheathing, as the relative humidity increases, so does the moisture content. However, the relationship is not linear and as RH increases, moisture content increases at a more rapid rate.

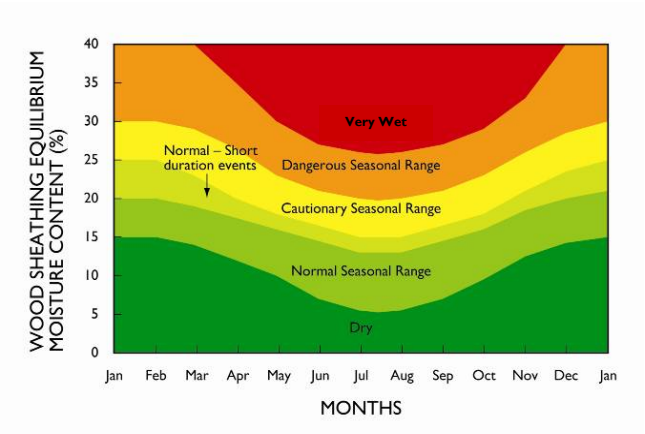

Figure 2-6 Approximate Seasonal Moisture Content Ranges and Thresholds

Due to the variability of readings, direct visual assessment of the underlying materials is quite useful and should be used as a tool to calibrate the moisture meter readings with actually verified conditions. Sole reliance upon moisture content readings is not good practice and should not be relied upon as a sole technique for evaluation of the sheathing health.

Some moisture-measuring devices have conversion capabilities that allow measurement of gypsum or other substrates. The consultant should be well-versed in the equipment and be sure to know prior to use which scale should be used and what the underlying material is. To avoid confusion, this information should be clearly identified in the final report. If multiple devices are used, results should be calibrated between devices prior to reporting.

Assuming that all of the above is well understood by the consultant, measurement of the moisture content of wood components is an important evaluation tool because wood-decay fungi require elevated moisture content to initiate growth. Actual moisture contents above 26% are necessary to initiate growth of decay fungi, but once established, moisture contents above 19%, and generally around 23%, are sufficient to sustain the fungal growth (Figure 2-7). Wood is generally considered safe from wood-decay fungal growth below 19% moisture content.

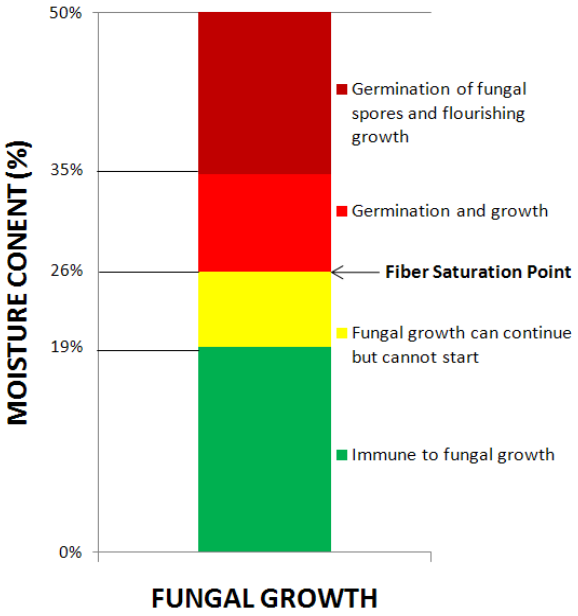

Figure 2-7 Fungal Growth in Wood

Moisture content measurements can be performed from the interior of the building if an internal test opening is performed simultaneously, thus providing an opportunity to verify the localized moisture distribution within the wall assembly (exterior sheathing to interior surface of studs). Typically, however, moisture probing is performed on the exterior of the building.

Moisture readings should be mapped on elevation drawings to gain a clear impression of the overall pattern of sheathing wetting (Figure 2-8). Colored classification of readings is helpful for the reader to understand the findings. A 2-dot mapping system is also beneficial to show results derived from moisture meter readings, along with a visual assessment of conditions at exploratory openings.

Density and Location of Moisture Probes

The following factors affect the density of moisture probe readings necessary on a building elevation:

- The exposure of the building elevations
- The complexity of the building configuration
- The visual symptoms of building enclosure distress
- The presence of suspect details
- The leakage history of the building

The density of moisture probing sites on a building should be determined by the consultant. Although a few data points are better than none, they can also mislead the consultant if they are interpreted as representative of the whole. Similarly, the location of readings must be representative of anticipated problematic areas and anticipated nonproblematic areas. Representative sampling in problematic and non-problematic areas provides the consultant with a check on the reliability of the results, as an anomalous reading may indicate instrument failure or other unexpected condition. The use of varied test locations, density of testing, and visual verification at exploratory openings should be sufficient to allow the consultant an overall impression of the wall assembly's ability to manage moisture, as well as the condition of the sheathing..

Typical locations to be included in the moisture survey are:

- Below window corners.
- Below joints in cladding materials.
- Below laps in cross-cavity flashings.
- Locations where staining is evident on the cladding.
- Below the interface between balcony guard walls and walls (saddles).
- Below the intersection of deck and balcony framing and walls.
- Below the intersections of roof and wall (i.e., kick-out flashing locations).
- Above stains that are apparent on concrete foundations.
- At cracks and unusual bulging in the cladding,
- Below the ends of back-sloped window head flashing.
- As a control, in an area that is unexposed to the weather and where there are no wall penetrations, windows, or other obvious details that often admit water (normal equilibrium moisture conditions anticipated).

Caution should be used when probing directly above or below flashings or where other metallic elements may be encountered (e.g., too close to aluminum window frames at nailing flanges). When probes contact metal flashing elements, the results will indicate extremely high values, as there is a conductive bridge between contact probes. Probes should not be used with materials not intended for the device, as results may be misleading.

Equipment Calibration and Use of Readings

Moisture meters should be calibrated regularly and according the manufacturer's requirements. It is typical to calibrate equipment a minimum of twice per year. While calibration should be done, the accuracy of the reading may not necessarily be critical. Preferably, results are used in conjunction with exploratory openings to verify actual conditions and are then used in relative scale compared to other readings taken with the same equipment on the same building. In fact hourly, daily, weekly, and seasonal fluctuations may dictate that moisture content readings be used only as a relative indication of moisture content in the wood material and not as an absolute reading (Figure 2-6). Temperature and wood species correction factors also need to be obtained. This information is typically available from the moisture meter manufacturer.

Figure 2-8 Presentation of Moisture Probe Results

2.5.2 Exploratory Openings

Exploratory openings are one of the more useful assessment techniques, as they provide direct visual observation of underlying materials, construction techniques, and flashing performance. Exploratory openings also provide the opportunity to collect samples of materials, possibly for analysis in a laboratory.

In the past, it was common for consultants to be retained near the end of a warranty period of a building to make exploratory openings to determine whether the structural damage has occurred as a result of water ingress and to demonstrate the extent of the damage. This may continue to be one reason to undertake exploratory openings. More commonly, their primary purposes are:

- To gather sufficient knowledge of the details of construction and general installation quality and consistency.
- To allow the consultant to gain clearer understanding of the actual condition and performance of the enclosure elements.
- To have sufficient knowledge to make rehabilitation recommendations and to develop an effective maintenance and renewals plan.

Interior vs. Exterior

Exploratory openings can be made from the interior or exterior of a building.

Interior openings are made by removing a portion of the interior building finishes to gain access to the exterior wall sheathing and stud cavity. The advantage of such a method of conducting openings is that the integrity of the exterior cladding is not compromised.

In the case of a wall assembly that, as a result of the exploratory opening, cannot be acceptably repaired, consultants may wish to perform the exploratory openings from the interior of the building. Openings performed on the interior should be sealed in an airtight fashion to prevent any mold that may be contained within the wall cavity from contaminating the interior environment.

Exterior openings are made by removing a portion of the cladding and sheathing to assess the condition of the wood components of the building enclosure. The advantage of undertaking an opening from the exterior is that there is less disruption to the occupants and that each of the exterior layers of the assemblies can be reviewed and their condition documented (i.e., condition and performance of weather barrier and flashing cannot be identified well through interior openings).

The decision to cut an exploratory opening in an exterior wall is not one to be taken lightly. Apart from aesthetically damaging the building, an exploratory opening introduces another penetration, which could lead to water leakage into a wall and subsequent deterioration of the wood frame. Damage to sheathing paper should be minimized; further removal of the cladding may be required to access undamaged sheathing paper and implement permanent repairs at the exploratory opening.

Proper short-term sealing of exterior exploratory openings is crucial in most Oregon climates to minimize the impact of the exploratory opening itself on the performance of the wall assembly. Several techniques are used including:

- Reusing the removed cladding together with sealant.
- Polyethylene sheets with sealant or tape at the perimeter.
- Prepainted sheet metal with sealant at the perimeter.
- Foil-faced, self-adhered membrane used to seal the exploratory opening with a sealant bead from the foil face of the membrane to the edge of the cladding. At the bottom of the exploratory opening, the membrane laps over the edge of the cladding to shed water effectively.
- Plywood patch with sealant at perimeter of plywood.

Regardless of the method used for temporarily sealing openings, it is imperative that the efforts be reflective of the length of time that the patch is anticipated to be left in place and, thus, the required durability level.

Location of Exploratory Openings

Factors influencing the decision of where to make an exploratory opening include:

- The moisture content of the sheathing (from the probe surveys).
- The appearance of the wood shavings removed from the holes drilled in the cladding while conducting moisture content probing.
- The qualitative assessment of wood strength determined by the ease of penetration of the moisture meter probes into the wood sheathing.
- The symptoms and details noted during a visual review of the building.
- The information gathered from occupant surveys.

Although the consultant should establish the number of exploratory openings based on specifics of the building under investigation, a reasonable estimate is to make about 1 opening per dwelling. In the cases of extremes (say only 1 or 2 units, or more than 50 units), the consultant will need to use judgment to determine the appropriate number of openings.

The typical exploratory opening in the cladding is about 1 to 2 square feet, but this will vary depending on the

specifics of each building. For instance, at a window corner an opening may need to be "L" shaped in order to expose both jamb and sill flashing conditions. Whatever the size or shape, it should allow for removal of portions of the sheathing in order to assess the condition of the wood-framed elements behind the sheathing. It is possible to use smaller holes made using core drills, and they are often used to verify probe results and confirm materials in the wall assembly rather than confirming the arrangement of materials at a detail.

The location of exploratory openings should be presented on drawings of the building elevations. Photographs of relevant exploratory openings should be contained in the report. The photographs should include one that indicates the location on the building as well as other photographs showing more detailed findings at the exploratory openings

Observations at Exploratory Opening

The moisture content of the wood-framed elements of the wall should be measured while conducting exploratory openings.

In some cases, the type and extent (into the wall assembly) of wood decay must be determined at each exploratory opening. If this information is required, the consultant should use judgment when evaluating wood-decay fungus and should engage qualified industrial hygienists or wood-decay experts if the consultant's own experience is not sufficient.

Detecting the existence of wood decay at exploratory openings can be readily done by probing suspect wood and by using a knife blade test to determine the type of wood fiber breakage. Insert a knife blade to a depth of about 3/8 inch at a shallow angle (around 30°) at right angles to the grain direction (the long axis of the lumber) and attempt to lever up a splinter. If the knife blade inserts with force (the wood is hard to lever up and splinters) then the wood is sound. If the knife blade is easily inserted and the wood is easy to lever up and snaps across the grain like a carrot, then the wood at that location is decayed.

2.5.3 Window and Door Evaluation

Window testing is often performed as part of a condition assessment. In some cases, the testing is performed in order to evaluate the current performance of windows, while in other cases it is used to identify the source of specific and known deficiencies. Typical tests include air infiltration and water penetration. Other tests could include condensation resistance, operation force or security-related features. The consultant should evaluate the purpose of the test first and then establish the best testing methodology accordingly. Evaluation falls into these two categories:

- Performance Evaluation
- Diagnostic Evaluation

When undertaking performance evaluation, the consultant often utilizes standards and test methods that evaluate the current performance of the window or door as a function of recognized industry acceptability. Test methods for air and water penetration are typically specific with regards to the pressures and durations of the procedure. Although testing for performance evaluation is useful and may provide the client with valuable information relating to the propensity for problems in the future, it does little to address the conditions that may be specific to known problems with the building enclosure.

Diagnostic testing is used to identify the source, path, and extent of damage associated with a particularly known deficiency. Although some of the same testing methodologies are used as in performance evaluation, the consultant must also use experience and understanding of building physics and construction to adapt the standardized tests in a way that is useful to the diagnostic intent. Test pressures, durations, and techniques are often varied from the performance-based procedures to re-create existing leakage paths. So long as a scientific method of approach is utilized, the

consultant should not be hampered by prescriptive test methods when diagnosing known deficiencies.

2.5.4 Water Testing

As there are very well established testing methodologies, this guide will not describe the techniques but will identify some of the more common and relevant ones.

ASTM E 1105 – *Field Determination of Water Penetration of Installed Exterior Windows, Skylights, Doors, and Curtain Walls, by Uniform of Cyclic Static Air Pressure Difference* is by far the most widely used procedure for evaluation of window leakage. It establishes the testing apparatus as well as the setup procedures necessary to perform the test. This test method is also referenced in many other procedures, such as AAMA 502 and 503.

AAMA 501.2 – *Quality Assurance and Diagnostic Water Leakage Field Check of Installed Storefronts, Curtain Walls, and Sloped Glazing.*

AAMA 502 – *Voluntary Specification for Field Testing of Windows and Sliding Glass Doors (Optional Sill Dam Test).*

AAMA 511 – *Voluntary Guideline for Forensic Water Penetration Testing of Fenestration Products* is an extremely useful standard that describes a number of reference procedures and tools. It also includes specific language that allows the consultant the ability to modify existing techniques to best serve the objectives of the evaluation.

One of the most commonly misunderstood items related to water testing is the selection of the test pressure (differential air pressure across the unit, produced with use of pressure chambers and air pumps). In performance evaluation, these pressures are determined by the design intent. However, with diagnostic evaluation, the intent should be to mimic the in-service pressures under which failure occurred. Identification of these test pressures requires background research of historic weather data along with understanding of when the leakage occurred on the building. There are published guidelines to assist the consultant with this evaluation. Two of them are listed here:

Section 4.2.1 Testing of ***AAMA 511*** (reference above),

G. Gabriel Cole and Thomas A. Schwartz, *Establishing Appropriate Field Test Pressures for Investigation of Leakage Through The Building Envelope*, published in **ASTM STP 1107** – Water In Exterior Building Walls: Problems and Solutions.

All of the above referenced documents can be obtained via ASTM and AAMA websites:

American Society for Testing and Materials, International (ASTM): www.astm.org

American Architectural Manufacturers Association (AAMA): www.aamanet.org

2.5.5 Flood and Other Roofing/Waterproofing Testing

Roofing and waterproofing performance can often be tested using flooding techniques. This typically involves plugging drains and flooding the surface with 2 to 4 inches of standing water for 24 to 48 hours. During and after testing, the consultant reviews the areas below the roof or deck for evidence of leakage. Flood testing must be performed only after a clear understanding of load implications as well as implications of the potential for significant water leakage. The value of flood testing varies with framing and underlayment type, membrane type, and roof slope. All of these should be carefully considered by the consultant prior to flood testing. Localized flooding around drain bowls is a useful and often utilized tool for relatively simple identification of drain-related leaks. The following standards provide additional background reference on the use of flood testing and other roof quality control measures:

ASTM D 5957 – *Standard Guide for Flood Testing Horizontal Waterproofing Installations*

RCI, Incorporated Manual of Practice – *Roof, Exterior Wall, and Waterproofing Consulting, and Quality Assurance Observation*

2.6 Sampling

Sampling techniques, quantities, locations, and methodology are an increasingly scrutinized aspect of building enclosure condition assessment practice. Many advocate the need to perform random sampling and quantitative analysis to achieve a statistically significant analysis. By its very nature, enclosure condition assessment technique is often at odds with random sampling and statistical methodologies, since these methods explicitly require that sample selection not be biased. However, in sample selection with enclosure assessment, it is necessary to utilize prior knowledge to help identify the most valuable sample areas for review, which is necessarily biased. From this perspective, it is favorable to utilize information-rich sampling, rather than random, blind sampling. This methodology is well established in the field of qualitative analysis. In their paper, *Qualitative Sampling of the Building Envelope for Water Leakage*, Lonnie L. Haughton and Colin R. Murphy provide a useful lay discussion of qualitative analysis and its direct benefit with use in the building assessment industry.

The consultant will need to utilize his or her experience, knowledge of building science, and information gathered from the background work to best determine the starting points for physical examination of the building. In its basic form, qualitative analysis hinges on the ability to use information-rich sampling, based on prior knowledge, to build a further analysis of the assessment. Information gathered from preliminary exploration is utilized to help determine the extent to which additional investigation is necessary. Sufficient sampling is required in concert with this information gathering in order for the consultant to reach meaningful conclusions and to make recommendations that are consistent with the owner's objectives as well as within the budgetary constraints of the condition assessment.

In the qualitative analysis method, the consultant's objective is to investigate to the point where there is limited value in additional exploration (i.e., redundancy).

Assessment through sampling requires some degree of extrapolation of findings. It is reasonable that the consultant extrapolate their findings to be representative of other similar conditions, provided there is enough background evidence from other investigative efforts to support this extrapolation. This is a subjective assessment, and one that relies upon consistency of findings, sample size, and professional experience.

It is not the intent of this guide to suggest that random sampling and quantitative analysis are not valuable in the assessment of the building enclosure, but rather that the consultant should utilize a variety of methods to prove or disprove hypotheses. Further, unbiased samples should be utilized in an attempt to disprove established assumptions.

2.7 Commonly Problematic Details

This section focuses on the prevalent components of each major building enclosure assembly that often exhibit symptoms of poor performance and require specific attention during the assessment.

Although this section is organized by assembly, most enclosure deficiencies occur at the interface between assemblies (e.g., roof-to-wall transition). The consultant should therefore pay particular attention to interface details. In its 1996 research study, *Survey of Building Envelope Failures in the Coastal Climate of British Columbia*, the Canada Mortgage and Housing Corporation (CMHC) showed that the primary source of moisture leading to performance problems was water entering from the exterior and that about 90% of the problems were related to interface details between wall components and at penetrations.

The tables presented in the appendices provide explanation and examples of commonly problematic details for each of the major building enclosure assemblies. The experienced reader will undoubtedly be able to identify other details not shown in the tables. The tables are not intended to be comprehensive but do provide good starting points for evaluation. Representative photographs are provided in Appendix 2C.

The consultant must have the ability to prioritize observations of the listed conditions. These may be considered as risk factors. This prioritization will be important for future performance prognosis, as discussed later in Section 2.9.2. For each condition, minimum consideration should include:

- **Exposure to wetting**: Is there overhang protection or another architectural feature to limit rainwater wetting? An unsealed hole may not be important if it never gets wet.
- **Drying potential**: Does the detail exist in sun-exposed areas or consistently shady areas? What is the overall drying potential of the wall assembly at the detail location?
- **Frequency**: How often does the condition occur on the building? A high-risk detail may have little relevance if it only occurs once.
- **Implications of failure**: How relevant is failure at this location? A base-of-wall detail that gets wet regularly may be problematic and require repair but may not affect many other assemblies. On the other hand, a leak at a window corner may appear minor but deposit water into a concealed wall cavity that contributes to decay.

For larger projects, tables, databases, or other data collection mechanisms can be helpful to collect, organize, and document this sort of information for subsequent analysis. This documentation can also be used to assess time-based change of performance.

While Appendices 2B and 2C present detail conditions for evaluation, the consultant will first identify key visual symptoms of enclosure deficiencies. Some of these key symptoms are presented in Appendix 2A.

2.8 Health and Safety

The first priority during the evaluation of an existing wood-framed building is the safety of the occupants, workers, and the public. The consultant should assess safety at all stages of the rehabilitation process. This assessment begins during the evaluation stage.

2.8.1 Structure

Where wood is used as the primary structural component of a building, conditions that cause deterioration of the wood can become safety concerns.

Fungi are microscopic organisms that feed on organic matter and can develop in wood if conducive conditions persist. Among the factors required for growth of wood-decay fungi, moisture content of the host wood plays the greatest role. The fungi develop from spores that germinate when they exist on a suitable substrate. They use various parts of the wood's cellular structure both for sustenance and as a substrate for colonization. The consumption of nutrients and spread of the colony in the wood continues as long as the appropriate conditions, principally warm temperatures and a supply of suitably wet wood, are available. Destruction of the wood cells reduces the ability of the wood to resist structural stresses and ultimately leads to a loss of structural capacity of the wood members.

Rapid strength loss occurs before decay is obvious to the naked eye, with some strength properties being more sensitive than others. Compressive strength perpendicular to the grain reduces at a fast rate while compressive strength parallel to the grain reduces somewhat slower. Thus, crushing of wall plates and beams and joists at their points of bearing may precede crushing of vertical compression members such as studs and posts.

Moist, decaying wood can also give rise to insect infestation, which can accelerate the deterioration process.

The discussion that follows describes typical potentially dangerous conditions in the building's exterior framing assembly.

Staining

Dark staining running out from behind cladding (Figure 2-9) is an indication of wood decay resulting from the breakdown of the cellulose fiber that provides wood most of its strength and stiffness.

Figure 2-9 Dark Stains on Underside of Balcony

Balcony Deflection

Wood decay often lowers structural integrity of wood framing and results in excessive deflection of cantilevered balconies. This decay often exhibits as springy balcony floors or spongy balcony floor sheathing. The degree to which the structural integrity of the balcony has been affected cannot be determined from a visual inspection alone. The consultant should err on the side of caution if he or she suspects wood decay. The owner should notify building occupants to limit loadings or to stay off the balconies completely until further investigation can be completed.

Figure 2-10 Deteriorated Balcony Framing and Sheathing

Balcony Guard Movement

Guards constructed of lumber-framed walls with finishes on both sides are prone to decay if they are not adequately waterproofed and vented (Figures 2-10, 2-11, and 2-12). If they can be easily displaced at the top or at their connection to the balcony structure, they may have been weakened by decay. Open-type guards constructed of wood or metal should also be tested qualitatively by forcing the top back and forth by hand. Movement at the connections to the balcony floor or the building wall may indicate either corrosion of fasteners or decay of the member into which the fasteners are embedded. In the case of guards built of wood, visible decay in the pickets, posts, or rails is an obvious sign of structural deterioration. If there is any doubt as to the stability of balcony guards, the owner should advice the building occupants to stay off the balconies until the guards can be tested to confirm their adequacy.

Figure 2-11 Framed Balcony Guardrails

Figure 2-12 Wood Decay in Framed Guardrails

Exterior Wall Deformations or Cracks

Bulging or cracked finishes (Figure 2-13) can be an indication that the wall framing is compressing due to decay in the wall plates, studs, or edge-of-the-floor framing. Windows and exterior doors that appear to be under excessive vertical load (exhibiting jamming or bulging) may also be an indication that the wall framing is compressing or that lintels are decaying. Sagging floors can be another indication of decaying supporting walls. The capacity of such walls to continue to support vertical loads should be determined by a structural engineer.

If the exterior finish is stucco and is bulging or cracked, a danger may exist that the stucco is detaching from the structure and could fall. The fall zone should be barricaded until the investigation can be completed.

Decay within the edge-of-the-floor framing may compromise the vertical load capacity of the floor if the ends of the floor joists are deteriorated at their point of bearing (Figure 2-14). If this is suspected because of such observations as spongy or sagging floors, precautionary shoring should be installed inside the building to support the joists or, alternatively, the room areas above and below the affected location should be barricaded. These situations should always be assessed by a structural engineer.

Figure 2-13 Cracked and Bulging Stucco at Floor Line

Figure 2-14 Decayed Rim Joist

Sagging or Settling of Isolated Members

Structural damage in isolated members such as posts, beams, and lintels is often readily apparent from visual observation because of sagging or settling (Figure 2-15). As there is less redundancy in the structure where such members are involved, the consultant should recommend precautionary shoring or barricading.

Figure 2-15 Decayed Walkway Post with Temporary Shoring Visible Behind

As the evaluation proceeds (exploratory openings), the consultant gathers further evidence on the condition of the structure by probing members to evaluate the moisture content of the wood and by exposing small areas of framing for examination. The emphasis here should be on following the vertical load path through the structure to assess its integrity. The consultant should ask the following questions:

- Has the remaining sound cross section of cantilevered joists, lintels, and isolated beams been reduced to the point where failure in bending or shear is possible?
- Have the ends of floor joists deteriorated to the point where they no longer have adequate bearing or sufficient sound cross section to resist shear forces?
- Are isolated posts still capable of carrying their design load?
- Is there a danger of someone stepping through decayed balcony sheathing, and are balcony guards still strong enough to protect the occupants?

In addition to structural deterioration, other factors to consider in assessing safety concerns are the redundancy of the structural framing, its overdesign or underdesign, and the expected loading (e.g., a member or wall may have adequate capacity temporarily, in the absence of snow load). Another key factor to consider is the length of time that may elapse before a repair program can be implemented, during which period decay may continue to progress.

2.8.2 Mold

General

There are a variety of fungi that can exist in water-damaged walls. One group, decay fungi, survives by digesting the lignin and cellulose in exterior wood sheathing and framing members, resulting in wood decay. Wood decay has necessitated the rehabilitation of some building enclosures in Oregon. Another group, molds, grows on sugars present in wood as well as the paper and starch in gypsum wallboard, along with other organic material. Molds are usually present in the form of surface growth and present less of a decay risk to the

underlying wood structure. However, molds may represent a health hazard to workers removing water-damaged materials, or to building occupants who are exposed during rehabilitation construction. The presence of molds must be recognized and dealt with during both the evaluation stage and construction stage of a rehabilitation project. The contractor should take steps to protect the workers and occupied space during rehabilitation activities.

In addition to the precautions required during enclosure rehabilitation projects, one can perform indoor air sampling to determine whether the mold fungi present in the air indoors are similar to those in outdoor air. There are high concentrations of the fungi that live outdoors, so samples of indoor air should normally contain these same fungi. There are developed procedures to evaluate whether occupied spaces have unusual mold contamination. These are based primarily on a careful inspection of the space for water damage and visible mold, and sometimes samples are taken.

If mold is detected, the consultant should engage an experienced mold consultant or industrial hygienist to obtain an appropriate protocol for continued work and safety.

Some reasons for taking this precautionary step might include:

- Occupants, or workers suffer from cold or flu-like symptoms, malaise, headaches or rashes, and these symptoms diminish when they are not at the building.
- Mold is visible on interior wall, ceiling, or carpet surfaces.
- There is a musty, earthy smell in the building indicating the presence of hidden mold.

Basic Mold Precautions in Building Enclosure Rehabilitation Projects

Although consultants performing the assessment may not have the necessary qualifications of mold consultants, they should be familiar with basic precautionary measures in order to avoid unnecessary exposure to themselves or occupants.

- Provide workers involved in rehabilitation in close proximity to mold with adequate Personal Protection Equipment (PPE).
  - Respirator with appropriate filter
  - Goggles
  - Gloves
- Minimize the spread of mold by workers to interior spaces and the worker's home.
  - Remove and bag clothing when leaving the site or moving to a clean space within the building.
  - Wear a Tyvek suit and dispose of it when leaving the site or moving to a clean space within the building.
- Minimize the spread of moldy materials from the exterior dirty spaces to interior clean spaces by air transport.
  - Create air barrier to separate clean and dirty space (if none exists).
  - Use depressurization fans to create flow from clean to dirty areas.
- Minimize transport of moldy material to interior clean spaces via movement of moldy materials.
  - Minimize dust
  - Don't transport material through clean part of building
  - Bag materials that must be moved through clean areas
  - Clean up residual moldy material on completion of rehabilitation program
  - Vacuum with a HEPA filter
  - Wipe with damp rags
  - Remove protective coverings

These basic precautionary measures are based on and consistent with measures for mold rehabilitation in indoor environments published by recognized authorities (see below).

More Information

Readers looking for further information can refer to the following documents:

- American Industrial Hygiene Association (AIHA) Biosafety Committee, *Field Guide for the Determination*

of Biological Contaminants in Environmental Samples, 227-RC-96, 1996.
- American Conference of Government Industrial Hygienists (ACGIH) *Bioaerosols: Assessment and Control*, Cincinnati, Ohio, 1999.
- Health Canada, Environmental Health Directorate, *Fungal Contamination in Public Buildings: A Guide to Recognition and Management*, Federal–Provincial Committee on Environmental and Occupational Health, Ottawa, Ontario, 1995.
- New York City Department of Health, Bureau of Environmental & Occupational Disease Epidemiology, *Guidelines on Assessment and Remediation of Fungi in Indoor Environments*, New York, NY, 2000.

2.9 Interpretation of Condition Assessment Results

There are four primary functions that the results interpretation must include:

- Report of current condition of assemblies and materials.
- Identification of all major moisture sources or other mechanisms of deterioration.
- Prognosis for future performance.
- Recommendations for rehabilitation or repair.

Further to the second bullet point, it is imperative that the analysis not only quantify the extent and severity of identified damage but also the mechanisms of deterioration. This point is critical and precursory to the ability to effectively present the last two bullet points (i.e., appropriate repair).

By understanding the extent, severity, and mechanism of the deterioration, the consultant has a sound basis for making recommendations to owners regarding the rehabilitation, maintenance, and renewals required for their building. The following examples illustrate the critical need to know both the extent and mechanisms of deterioration:

Example #1: Know the Extent as well as the Mechanism of Damage

An enclosure assessment clearly identified water leakage at poorly installed flashings over horizontal trim (belly band) on a lap-sided 3-story apartment building. The consultant assumed this was the source of all leakage identified on that elevation of the building and subsequently designed a repair that included replacement of significant portions of siding, trim, and flashing. After repairs, leakage and deterioration continued to appear on the wall. The consultant failed to follow the extent of damage further up the wall, which would have led him to identify leakage from a roof/wall interface detail with a missing kick-out flashing.

Example #2: Multiple Moisture Sources

A 3-story bay window on a building in central Oregon (high desert, cold winter climate) exhibited significant deterioration around windows, at outside trimmed corners, and in the field of the wall adjacent to the window. The window-to-wall ratio was quite high, and a significant portion of the wall was covered with self-adhered membrane flashing due to the detailing at the window perimeter. The consultant correctly identified leakage from vinyl window corners, as well as leakage from siding interfaces at the outside corner trim. The entire bay wall and window assembly was reconstructed using construction practice similar to original construction, but with improved waterproofing details around windows and behind trim. A year later, moisture problems ensued, although to a slightly lesser extent. The consultant failed to identify condensation as a source of moisture due to the excessively high use of self-adhered membrane flashing (a vapor retarder) on the outboard side of the insulated wall cavity. This missed opportunity to resolve the moisture problems resulted in a second reconstruction of the bay wall/window assembly to include exterior continuous insulation, as well as modification to the ventilation assembly within the interior space to reduce relative humidity.

Example #3: Construction Moisture

A single-story, exterior-access shopping center was under construction in Oregon's greater Portland area. The low-slope roof structure was framed with open web truss joists and included a large, framed parapet on the front façade side of the building. The parapet, including its bracing structure, was sheathed and roofed over, enclosing an "attic" space over the structural roof sheathing. After a few months, deteriorated sheathing and mold were identified in and below this attic space. Initial investigations focused on roof leaks. These investigations proved invalid after later investigation, and construction schedule review revealed that roofing was installed over the wood framing during wet, inclement weather—trapping moisture in the unventilated attic space and causing the observed mold and deterioration.

2.9.1 Establishing Scope of Rehabilitation

The assessment process will define the need for rehabilitation and the scope of the issues that need to be addressed. The assessment report will present conceptual level repair concepts and costs. These concepts will then be developed into more detail as part of the design phase of the project, discussed in Chapter 3.

In most cases, there are alternative methods for rehabilitation of moisture-damaged buildings. For example, two basic alternatives could consist of:

- The addition of overhangs to reduce exposure so that wetting of the walls and windows is no longer likely.
- Reconstruction with a new rainscreen wall assembly that can accommodate the higher exposure conditions.

The determination of which of these alternatives to recommend and present to the owners as acceptable possibilities is based on factors such as capital cost, extent and severity of existing damage, and municipal approvals for changes to the building form.

The process for evaluation and development of rehabilitation scope is presented diagrammatically in Figure 2-16 at the end of this section. This diagrammatic description follows the general form of the assessment process provided in this chapter. It begins with identification of the symptoms, follows with determination of the sources, and then continues with resolution of the cause. Once the causes are identified, one can review factors that affect the repair and then conclude with presentation of conceptual repair alternatives.

For each component or problematic condition, the consultant must interpret his or her findings to eventually develop an appropriate set of rehabilitation alternatives. The following examples illustrate this interpretation and analysis, while referencing phases on in Figure 2-16.

Example #1: Systemic Window Failure

The consultant identified symptoms of damage as staining below the sill corners of vinyl windows. In addition to stains, moisture probe readings were high in the exterior sheathing where stains exist relative to other areas on the building. The windows were moderately exposed in most locations, but some were well-covered by overhangs on the north elevation. Visual symptoms were generally consistent throughout. The consultant performed exploratory openings at a few selected windows and verified that water intrusion and subsequent sheathing deterioration patterns correlated with elevated moisture readings and stains. The consultant identified a systemic deficiency in the sill flashing details that allows water to leak behind the cladding. Additionally, where water leaks, it becomes trapped due to the limited ability of the assembly to drain and dry.

Based on the findings, the consultant determined that continued leakage will be detrimental to the wall framing and will likely result in fungal growth and wood decay. The extent of the deficiency, prognosis

of continued and escalating damage, and high exposure all lead the consultant to conclude that repairs must be performed. Due to the current extent of damage, disassembly and replacement are necessary. As conceptual repair alternatives, the consultant presented options as follows:

Alternative 1: Remove the existing window, repair damaged materials, provide improved flashing details, and reinstall existing window with similar cladding.

Notes: This repair alternative will correct the immediate deficiencies by improving the details that caused the failure. However, it does nothing to reduce further wetting, correct any window deficiencies, or improve the assembly to extend the expected service life. It is likely to provide marginally acceptable performance with some continued risk of moisture damage.

Alternative 2: Remove the existing window, repair damaged materials, provide improved flashing details, provide new drained cavity behind the perimeter window trim, install additional head flashing to direct water away from the window, replace the existing windows with new windows.

Notes: This repair alternative will provide the improvements noted in Alternative 1 and, in addition, will reduce exposure conditions with a new head flashing, as well as reduce the sensitivity to moisture by including drained cavity detailing. New windows will provide less moisture-sensitive materials and will extend the expected service life.

Alternative 3: In combination with either Alternative 1 or Alternative 2, provide awnings over the windows to reduce exposure to wetting.

Notes: This alternative, when used in combination with one of the other options, will reduce the exposure to wetting, thereby reducing the risk of similar failure in the future. This option may provide the owner the ability to implement Alternative 1 rather than Alternative 2, with an acceptable cost/risk/benefit relationship.

The reader may recognize that the simplified example above can quickly become complex as multiple symptoms and sources are identified. In Figure 2-16, note that symptoms and sources may also appear to overlap, such that direct linkage between the two may not be mutually exclusive of others on the list. In the figure, "mold on interior gypsum" is listed under Symptoms of Deficiencies. In the adjacent box under Moisture Sources, water leakage and condensation due to high interior moisture sources are both listed as possible sources. The consultant must weigh all factors to determine the mechanisms of damage.

2.9.2 Prognosis of Future Performance

Each of the five phases listed in Figure 2-16 impacts the consultant's expectation for future performance. With each repair alternative, the assessment report should inform the owner of the associated probable prognosis and risks. At this point in the rehabilitation process, accurate prediction of life expectancies for assemblies and materials is not necessary; however, the assessment report should relay the relative risks associated with the presented strategies. Often the "do nothing" approach must be examined in comparison to the "do something" alternatives, and each are to be examined along with the risk factors discussed in Section 2.7. The risk factors provide a reminder to assess the relative importance of the symptoms, sources, and causes of the problems and, together with the factors affecting the scope of repairs, provide the framework for developing the repair alternatives.

2.10 Budget/Costs Estimates

This guide does not recommend procedures to perform cost analysis. The competent consultant should have the necessary background and resources to perform and present cost information. Alternatively, the consultant may chose to engage a contractor or construction manager to perform cost estimation on his or her behalf.

At this stage of the assessment, the consultant may have only provided the client with a series of rehabilitation alternatives. Without knowing which options the client will ultimately select, it may be difficult to provide accurate cost estimates.

However, the analysis should endeavor to provide preliminary budget estimates for the variety of options presented. These cost estimates may only be accurate to within ±30% of the actual repair costs but will provide the client with order of magnitude understanding of their rehabilitation needs.

Subsequent stages of the rehabilitation process will further refine these cost estimates. Chapters 3, 4, and 5 describe this cost refinement process as the project moves out of the assessment phase and through design, construction documents, and bidding.

Figure 2-16 Establishing Scope of Rehabilitation

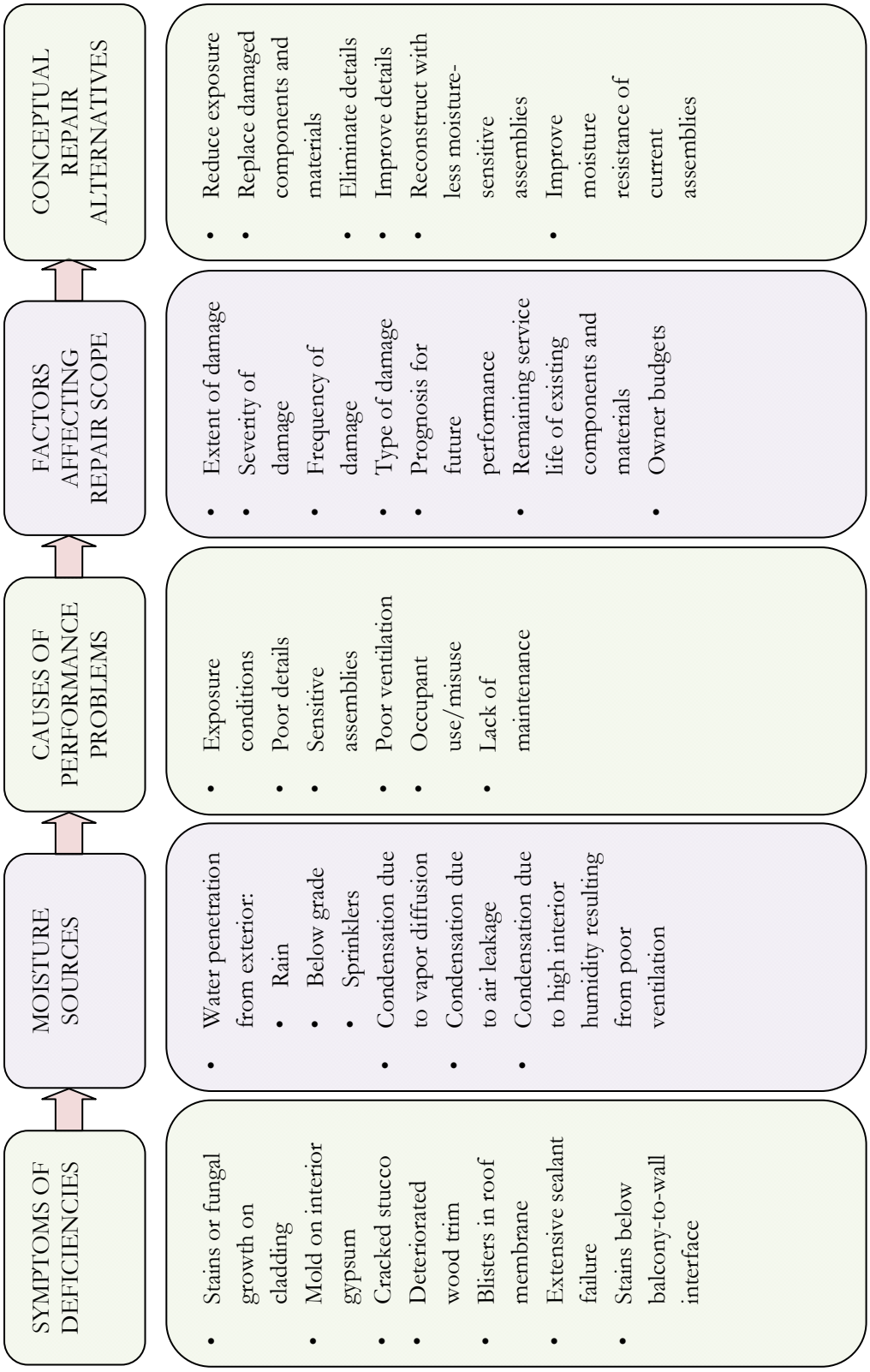

2.11 Sample Table of Contents of Assessment Report

The table of contents below is for general reference only and is not necessarily a fixed format. The report should, however, include all of the basic information provided below. Note also that third-level items are generally not shown, or shown in incomplete listing, as these will be highly dependent upon building-specific information.

1. Executive Summary (Optional)
   - 1.1 Description of Building
   - 1.2 Summary of Overall Physical Condition
   - 1.3 Summary of Conclusions and Recommendations
   - 1.4 Probable Costs
2. Introduction and Background
   - 2.1 Scope
   - 2.2 Documents Reviewed
   - 2.3 Interviews, Discussions, etc.
3. Observations
   - 3.1 General Observations
     - 3.1.1 Assembly Descriptions
   - 3.2 Exterior Observations
   - 3.3 Interior Observations
   - 3.4 (Alternate format may be broken down by assembly)
4. Testing
   - 4.1 Moisture Survey
   - 4.2 Exterior Exploratory Openings
   - 4.3 Interior Exploratory Openings
   - 4.4 Water Tests
   - 4.5 etc.

Project dependant, this information may be better placed in an appendix, with a summary provided here.

5. Discussions

   (The format of this section will be highly dependent upon findings. Optional formats should be determined based upon the most relevant information)

   Optional Format:
   - 5.1 Moisture Sources
   - 5.2 Leakage Paths
   - 5.3 etc.

   Optional Format (by Assembly)
   - 5.1 Glazing
   - 5.2 Cladding
   - 5.3 etc.
6. Conclusions and Recommendations (depending on complexity, consider splitting into 2 sections)
7. Probable Costs
8. Additional Considerations, Qualifications, etc.
9. Exhibits, Appendices, etc.

2.12 Consultant Checklist

Preliminary Efforts	
Identify Reasons for Assessment	
Identify Appropriate Level of Assessment Based on Owner Expectations	
Clearly Communicate Level and Scope of Assessment as well as Deliverables with Owner	
Identify Assemblies for Review	
Establish Scope of Work	
Assessment	
Deliver, Collect, and Analyze Occupant Survey	
Review Background Documents	
Perform Interviews	
Perform On-site Visual (General, Interior, Exterior)	
Perform Exploratory Openings and Testing	
Take Necessary Health and Safety Precautions	
Identify Performance Issues and Causal Relationships	
Analysis and Reporting	
Identify Appropriate Follow-Up Based on Assessment	
Determine Future Prognosis of Current Assemblies	
Determine Extent and Severity of Performance Problems	
Determine Cause(s) of Performance Problems	
Determine Appropriate Rehabilitating Strategies	
Develop Rehabilitation Cost Estimates	
Prepare Condition Assessment Report and Present Results to the Owners	

CHAPTER CONTENTS

3 DESIGN 3-1

3.1 Introduction 3-1
3.2 Oregon Building Codes 3-2
3.3 Design Factors 3-3
3.4 Moisture Control Principles for Rehabilitation 3-5
3.5 Architecture & Zoning 3-14
3.6 Durability 3-14
3.7 Sustainability..... 3-15
3.8 Assembly Components and Concepts 3-16
3.9 Above-Grade Wall Assemblies 3-18
3.10 Below-Grade Wall Assemblies 3-28
3.11 Other Assemblies 3-31
3.12 Rehabilitation Program..... 3-33

TABLE OF FIGURES

Figure 3-1 Moisture Index Overlay.....3-8
Figure 3.2 Overhang Ratio.....3-9
Figure 3.3 Exposure Nomograph.....3-10
Figure 3-4 Cost Analysis Example #1.....3-37
Figure 3-5 Cost Analysis Example #2.....3-38
Figure 3-6 Cost Analysis Example #3.....3-39

THIS PAGE INTENTIONALLY LEFT BLANK

3 DESIGN

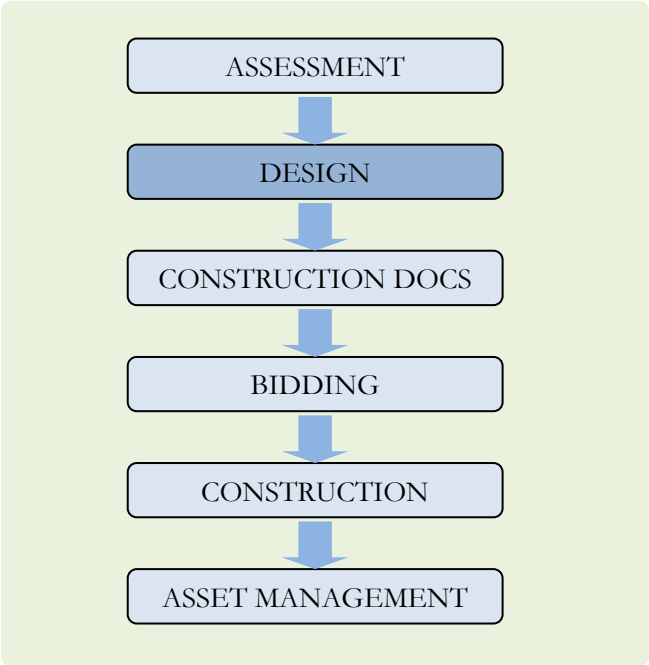

3.1 Introduction

3.1.1 Introduction

This chapter deals with both the technical aspects of rehabilitation design and the administrative and contractual aspects of the pre-construction project phases. The main responsibilities of the consultant and the owner associated with the design stage are as follows:

Consultant Responsibilities

- Provide owner with consultant/owner agreement.
- Review the project program, scope of work, etc.
- Advise the owner with respect to the need for specialist consultants, structural engineers, code consultants, quantity surveyors, mechanical/electrical engineers, building enclosure consultants, architects, etc.
- Prepare design drawings and specifications to describe the character of the projects, including all major systems, materials, and elements.
- Review and revise construction and project budgets as necessary.
- Review and advise the owner on alternative construction contract types.
- Review applicable statutes, codes, bylaws, regulations, etc.

A number of technical and administrative issues are addressed on an ongoing basis and span both the design and construction document stages of a rehabilitation project. A certain amount of detailed design may be undertaken during the construction documents stage, while some detailed building code issues may need to be addressed early on in the design stage. For clarity, topics related to municipal planning and development permits are dealt with in the design stage and building code issues are covered in Chapter 4 - Construction Documents.

The design stage in rehabilitation projects corresponds to the design development stage in typical architectural projects and the preliminary design services stage in typical engineering contracts. Schematic design stages are generally not applicable to rehabilitation projects as the conceptual design decisions, building form, orientation, number of stories, etc. are already part of the existing building condition. However, a number of project start-up activities usually associated with schematic design must be addressed at this stage.

The structural design work for rehabilitation projects is split between two stages: the design stage and the construction stage. During the design stage, many issues which are known can be designed for, such as new support posts or guardrails. In addition, many standard details (such as splices) can be developed, and materials for rehabilitation can be specified. However, many design decisions with respect to decayed wood or deficiencies in original framing can only be made once the structure has been exposed during the construction stage.

3.1.2 Project Team

Larger and more complex rehabilitation projects may require a project team consisting of a number of

consultants from different disciplines. Owners will typically deal directly with one prime consultant, who in turn will hire and coordinate the consultant team members.

Ideally the consultant who carried out the evaluation of the building and produced the condition assessment or investigation report will continue to be involved throughout the pre-construction and construction stages of the rehabilitation project. In many cases it is desirable, for continuity reasons, that the evaluation consultant serve as the prime consultant for the rehabilitation efforts. If the consultant who performed the original evaluation is not involved in subsequent project stages then the new consultant must review the previous work and verify that the evaluation and conclusions based on the evaluation are appropriate. In some cases this may necessitate the new consultant undertaking additional exploratory work or reconsidering some of the previous recommendations.

3.2 Oregon Building Codes

3.2.1 Governing Documents

Multiunit wood-framed structures are a complex breed under the Oregon codes. At midyear 2011, they might fall under either the jurisdiction of the 2011 Oregon Residential Specialty Code (ORSC) or the 2010 Oregon Structural Specialty Code (OSSC) as Residential Group R. The consultant must identify the appropriate governing document prior to finalizing decisions on rehabilitation design.

Most often, multiunit dwellings fall under Residential Groups R-1, R-2, or R-3 as defined in OSSC Section 310.1. In the case of detached one- or two-family dwellings under Group R-3, the ORSC typically governs. The above summaries are simplified and the consultant should verify as required.

In addition to the above, building enclosures are partially defined by the provisions of governing energy codes. Currently, the 2010 Oregon Energy Efficiency Specialty Code (OEESC), based on the 2009 International Energy Conservation Code (IECC), applies to residential and commercial buildings designed and constructed under the OSSC. For the purpose of this guide, specific to multiunit residential buildings, those buildings are generally categorized as Residential Group R.

The OEESC is itself partitioned into Chapter 4 - Residential Energy and Chapter 5 - Commercial Energy Efficiency and, to complicate matters, carries its own unique definition of "Residential". Chapter 4 somewhat mimics the ORSC Chapter 11 requirements, although modifications are off-cycle between each code and therefore may vary slightly between amendment cycles. This is the case at the publication date of this guide. OEESC defines "a residential building [as] an R-2, R-3, or R-4 building three stories or less in height. All other buildings, including residential buildings greater than three stories in height, are regulated by the energy conservation requirements of Chapter 5."

To summarize, the enclosures of most multiunit residential wood-framed structures 3 stories or less in Oregon adhere to:

- 2010 OSSC, and
- 2010 OEESC Chapter 4

Those greater than 3 stories adhere to:

- 2010 OSSC, and
- 2010 OEESC Chapter 5

Residential Group R in Mixed-Use Buildings

Where Residential Group R occupancies are contained within a commercial building, the fenestration and insulation aspects of the commercial building may be subject to more stringent criteria. The consultant should review Chapter 5 of the OEESC for clarification.

3.2.2 Additions, Alterations, Renovations, or Repairs

OEESC Section 101.4.2 states that additions, alterations, renovations, or repairs are subject to the same energy

code regulations as new construction. There are exceptions, however, that may affect the building enclosure. Consultants should familiarize themselves with the referenced code section, as the simple act of exposing a wall or ceiling cavity during repair or renovation could trigger the need to upgrade to current code.

In the case of limited or targeted repairs to buildings, these exceptions may be unclear and may require clarification from code advisors or the local jurisdiction officials.

OSSC Section 3401 describes the compliance path for reuse or replacement of existing materials. As this section of the code is more complex, this guide does not attempt to summarize its provisions. The consultant should consult the code directly. However, it has been the experience of most building enclosure consultants that upgrading enclosure assemblies to current code is the preferred and best-practiced method, so long as the repair is not a targeted one that prohibits the practical application of such provisions.

The following two examples are provided for clarity:

Example 1 – Repair In-Kind (i.e., No Code Upgrade)

Local deficiencies in flashing must be repaired at roof-to-wall interfaces to address specific leak concerns identified during a condition assessment. The repairs will include removal of small portions of cladding and flashing and will not require wholesale replacement of cladding, sheathing, or weather barrier materials.

Example 2 – Upgrade to Current Code

The consultant identified systemic deficiencies as part of a condition assessment and determined that significant portions (e.g., full elevations, etc.) of the building cladding must be removed to affect necessary repairs. Installation of new sheathing, weather barriers, flashings, and cladding should be done based upon current best practice and current code provisions.

Example 3 – Partial Upgrade

Through a condition assessment, the consultant identified deficiencies at windows that resulted in leakage to the interior of the building wall. To affect necessary repairs, the consultant determined that the windows should be removed and new flashing systems implemented. The replacement windows should perform to current code requirements, as should the installation detailing. However, the surrounding cladding that did not need to be removed need not be upgraded to current code or best practice.

A Case for Reason

It is not the intent of this guide to limit the ability of a consultant to suggest or implement reasonable repairs to portions of buildings in order to provide valuable solutions to uniquely identifiable deficiencies. The caveat is that the consultant must inform his or her client of the limitations of the repair strategy.

It is not reasonable, however, for the consultant to represent that the designed strategy will perform to a degree in significant excess to its actual ability.

3.3 Design Factors

3.3.1 Fixed Factors

Rehabilitation design of existing buildings differs from new construction design in many ways, but perhaps most significant are the factors that are out of the consultant's control. As a result, the consultant should use these factors to provide context for decisions related to factors within his or her control. These fixed factors include:

- Condition of existing assets
- Durability of the existing construction
- Exposure conditions
- Building form and orientation

Condition of Existing Assets

Chapter 2 discussed the condition assessment aspect of the rehabilitation program. The knowledge obtained from this assessment is fundamental to the design process in that it establishes the extent to which existing assemblies may be reused or necessitate replacement.

The condition of the existing assemblies may dictate the consultant's course of action. For example, in the event of health or safety concerns, the consultant may be required to implement immediate and temporary measures.

Durability of the Existing Construction

In contrast to the existing condition is the ability of the assemblies to continue to perform. The condition assessment developed the expected service lives of assemblies. For design purposes, the consultant should assess the anticipated service life from two perspectives:

- The technical ability of the assemblies to perform
- The owner's expectation of the performance capabilities

The experienced consultant will understand the subtle but important distinction between the two. Too often consultants are asked to provide a rehabilitation plan to correct identified deficiencies but are unclear on the owner's expectation of performance. In some circumstances it is straightforward. In others there may be a range of solutions, each with its own degree of durability. It is the consultant's obligation to clearly identify the variety of repair options and to assist the owner with selecting the one that best fits the owner's intent. It is the owner's obligation to adjust his or her expectations based on the provided information and the selected repair strategy, or in some cases adjust their budget to meet their design expectations.

It is beneficial for the consultant to present repair options in a format that ranges from least durable (usually corresponding to least expensive) to most durable (usually corresponding to most expensive). The number of options between the two will depend on the specific circumstances of the project. Each option should include a description of the performance expectation and the correlating maintenance requirements.

Much of this exercise is based upon the consultant's judgment and experience. Failure modes from past similar projects should be used as reference. The consultant will need to identify the mechanisms that damage the existing materials and the extent to which these mechanisms will continue to damage the existing materials, as well as the new materials that may be put in place.

Exposure Conditions

The degree to which a building is exposed to wind, rain, sun, and temperature variation significantly influences the durability of its assemblies. Each of these factors varies significantly, both by macro- and micro-geographical region (e.g., location within the state and location within the city).

Ultimately, the relationship between wetting and drying potential plays the largest role in the durability of enclosure materials and assemblies. Ideally, there would be an index to enable the consultant to classify the wetting and drying potential of a particular geographic region to assist with assessing the overall risk and exposure category for design purposes. Such an index does exist in the building codes in British Columbia, Canada but does not in US codes. Although these moisture index values can be calculated using the same methods for Oregon cities, for simplicity this guide attempts to utilize the climate zone classifications already established and codified.

These moisture indices, along with the effects of exposure to wetting and the design principles to manage them, are discussed in greater detail in the Moisture Control Principles for Rehabilitation section below.

Building Form and Orientation

Overall form and orientation of a building are generally fixed, yet features like cornices, parapets, canopies, balconies, and recesses have significant influence over rain deposition on walls and other assemblies. Rain accumulates and drains in paths that are defined by these features. Water penetration occurs when accumulated water finds holes and is accompanied by a driving force to move the water through the hole. One may recognize two fundamental points from this: that water accumulation increases the risk of failure and that locations with holes should remain dry.

Rehabilitation design differs from new design in that the consultant's ability to manage building form is usually limited to minor modifications such as the addition of overhang protection on doors or the addition of parapet cornice overhangs.

Directional wetting (building orientation) is often misleading when one assumes that moisture problems exist primarily on south- and west-facing elevations. The consultant should note that the drying capacity of north-facing elevations is substantially lower due to less sun exposure. As a result, northerly elevations often remain wet for longer periods of time.

3.3.2 Energy Upgrades

Energy loss through the enclosure accounts for a significant percentage of overall energy use of a building, especially in existing buildings that are constructed using older technology. Building enclosure rehabilitation provides a unique opportunity to significantly improve the overall energy efficiency of a building, often with very little additional effort to the already necessary work. Many of the details and design concepts discussed in this guide are directly applicable to those required for energy upgrade. Some of the more significant opportunities for improvement include:

- Improving overall air tightness of the enclosure,
- Replacing thermally inefficient glazing systems with new, higher efficiency systems, and
- Adding continuous insulation to the exterior of the building sheathing to limit thermal bridging that occurs through wall framing.

3.3.3 Other Factors

There are other nontechnical or physical factors that influence the consultant's and owner's decisions when rehabilitating a building. They are mostly financially based but can also be politically based factors.

Although certain scopes of repair may be left for later, based on their performance priority, it may be more cost-effective to repair them now to take advantage of construction sequencing and the associated cost savings. The decision to perform work now may result in better detailing, less disturbance of rehabilitation work later, or long-term cost savings. Some common details that are often in this category are:

- Windows and doors
- At-grade waterproofing
- Roofing
- Sealant
- Exhaust vents and fireplace vents

Internal politics, funding cycles, and other factors often play a surprisingly significant role in the decisions to perform rehabilitation work. Although it is not for the consultant to opine on most of these concerns, he or she should be available to assist with various phasing and pricing scenarios to assist the owners with these decisions.

3.4 Moisture Control Principles for Rehabilitation

The physics of building science does not differ from new construction to remedial construction, nor do the climatic conditions to which the building is exposed. However, the consultant's ability to manage or influence certain factors differs significantly, since many of the

design parameters are either fixed or impractical to manipulate.

The greater the extent of the rehabilitation program, the more latitude the consultant has to modify existing design parameters. For example, an existing building may have no designed air barrier. In a targeted repair strategy there is little ability to implement a new air barrier, whereas with a comprehensive program this may not be the case.

The consultant is challenged with consideration of the existing conditions and building form in conjunction with his or her understanding of the failure mechanisms. There is often greater judgment required on the part of the consultant with rehabilitation than with new construction.

The most common source of moisture in existing buildings is direct rainwater leakage. Furthermore the water enters into assemblies at details, and the assemblies fail because they are too sensitive to moisture and their wetting to drying balance is tipped. Therefore, the appropriate design to resist water penetration from the exterior can usually be accomplished by selecting an appropriate wall assembly for the exposure conditions and properly designing the details.

Because of the constraints and practical implications usually encountered by consultants in rehabilitation, this guide focuses on the common design parameters, namely water penetration control. However, the consultant should be aware of the moisture balance principles described below. In the event that a comprehensive rehabilitation is necessary, the consultant is encouraged to reference the corollary guide, *Building Enclosure Design Guide for Wood-Framed, Multiunit Residential Buildings*, available through Oregon Housing and Community Services. Section 3.4.3 of this guide discusses control of other moisture sources.

3.4.1 Moisture Balance

The design and construction of the building enclosure for moisture control is a process of balancing moisture entry mechanisms (wetting) and moisture removal mechanisms (drying). An imbalance may result in moisture accumulation within assemblies and materials, potentially leading to deterioration of less moisture-tolerant materials.

Wetting Mechanisms

Aside from accidental water such as pipe leaks, there are 3 primary sources of water that may enter the building enclosure:

- Exterior Moisture
- Interior Moisture
- Construction Moisture

Although construction moisture can and should be considered when undertaking the rehabilitation work, it is less likely a contributing factor compared to the others when considering the design of the rehabilitation program.

Interior moisture sources are those generated from the inside by use and occupancy. Moisture can migrate through the exterior wall assemblies either through air or vapor transport mechanisms. When the condition assessment identifies interior moisture as a significant source, the rehabilitation design should include the appropriate strategy for mitigation. This is often accomplished with some combination of heat distribution modification, ventilation modification, and wall assembly modification.

Exterior moisture sources are the most common sources in need of being addressed in enclosure rehabilitation projects. Exterior sources include:

- Rain
- Groundwater
- Snow
- Moisture from warm, humid air or wet materials that migrates inward via air movement or vapor drive

Drying Mechanism

Water in an enclosure assembly is removed by either drainage or drying.

Drainage: Water will drain down and out of hydrophobic assemblies as well as from oversaturated hygroscopic materials. Elements like sloped flashings or roof drains use gravity to divert and drain water to a safe disposal area.

Drying: Although much less effective than drainage, these drying mechanisms also remove water from enclosure materials:

- *Evaporation* of water that reaches the outer surfaces of materials due to capillarity or other transport mechanisms
- *Diffusion* of water from high to low vapor pressure zones
- *Ventilation* of water as moving air picks up and transports it from one place to another

3.4.2 Water Penetration Control

Building scientists have understood the basic principles of water penetration control for many years. The application of those principles in real buildings has far too often been less than ideal. An excellent overview of these principles is provided in the April 1963 publication *Canadian Building Digest No. 40, Rain Penetration and its Control* written by G.K. Garden (CBD-40). A summary of the principles presented in CBD-40 follows.

Three conditions are required to move water through a surface:

- A source of water at the surface of the material
- Openings through which water can pass - Water Entry Paths
- A force to move the water through the openings - Driving Force

Eliminating any one of these 3 conditions will prevent water entry. In practical terms, most building assemblies rely on the partial elimination of a combination of these conditions.

The following sections describe the variables associated with rain penetration control in general terms. The specific strategies that are used for various assemblies are discussed in later sections and chapters of this guide.

Controlling Exposure to Rain Water

Controlling exposure to rain water is really a 2-step process:

1) Through the use of overhangs and drip edges, limit the amount of water that is able to come in contact with the building enclosure assemblies.

2) Use appropriate assemblies and details to control the water that does reach the building enclosure such that it does not penetrate through or into the enclosure to cause damage.

The first step can often have the greatest effect on controlling exposure to rain, but is also less likely to be manageable by the consultant in a rehabilitation project. The addition of overhangs may be practical in some cases, but not in most. In some cases the consultant has the ability to change minor architectural features such as adding drip flashings or recessing windows.

The second step is the most controllable in a rehabilitation project and should therefore be a primary focus for the consultant.

Exposure Nomograph

The nomograph in Figure 3.3 uses established metrics to assist the consultant with placing the building within a particular exposure category and ultimately to assist with designation of appropriate rehabilitation design strategies.

For water penetration control design, one can simplify exposure assessment to a consideration of these 3 factors:

- Climate
- Local terrain
- Overhang ratio

Since in rehabilitation these 3 factors are relatively fixed, the consultant enters the nomograph at 3 points to determine the exposure category. If there is ability to change the overhang ratio with the new design, the nomograph may be used to assess the relative value of this option. However, the intention of the nomograph is to provide a qualitative representation of exposure. It is intended to encourage the designer to think about many of the variables that need to be considered in assessing exposure and provide a starting point for the selection of appropriate wall assemblies and windows as well as the design of the window-to-wall interface details.

Climate: Although terrain and overhang ratio are relatively simple to describe and classify, climate is a much broader category that requires some analysis. For the purpose of enclosure design, and with respect to wetting and drying potential, an index of the geographic region in terms of its wetting/drying potential is of interest. Unfortunately, in Oregon there is no such established index. In British Columbia, however, an index termed the Moisture Index is identified in the BC Building Code. This index is a function of both wetting and drying and is relatively simple to calculate given historical weather data. Although Moisture Index values are not readily available for Oregon, the OEESC does provide a well-established climate zone map.

Oregon Climate Zones

OEESC Chapter 3, Figure 301.1 references the ASHRAE 90.1 climate zone map. Oregon is partitioned along the Cascade Mountains to Zones 4C (Marine) and 5B (Dry).

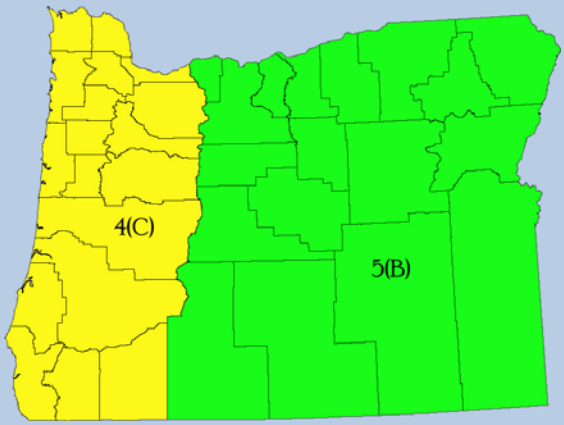

Figure 3-1 presents an overlay mapping of the Moisture Index to the OEESC climate zone map. When compared to the climate zone map, it is evident that values below about 0.5 correlate quite well to Zone 5, while values above 0.5 correlate to Zone 4. There are some exceptions around the Medford area. It is also the case that values above 1.0 correlate with cities directly on the coast or cities with annual rainfall averages in excess of about 39 inches.

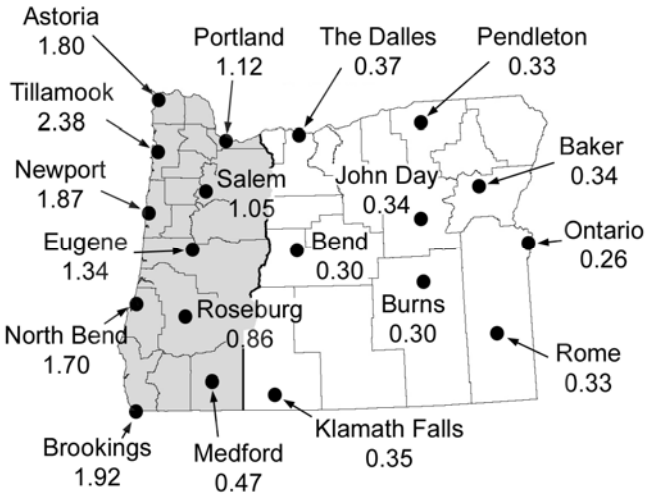

Figure 3-1 Moisture Index Overlay

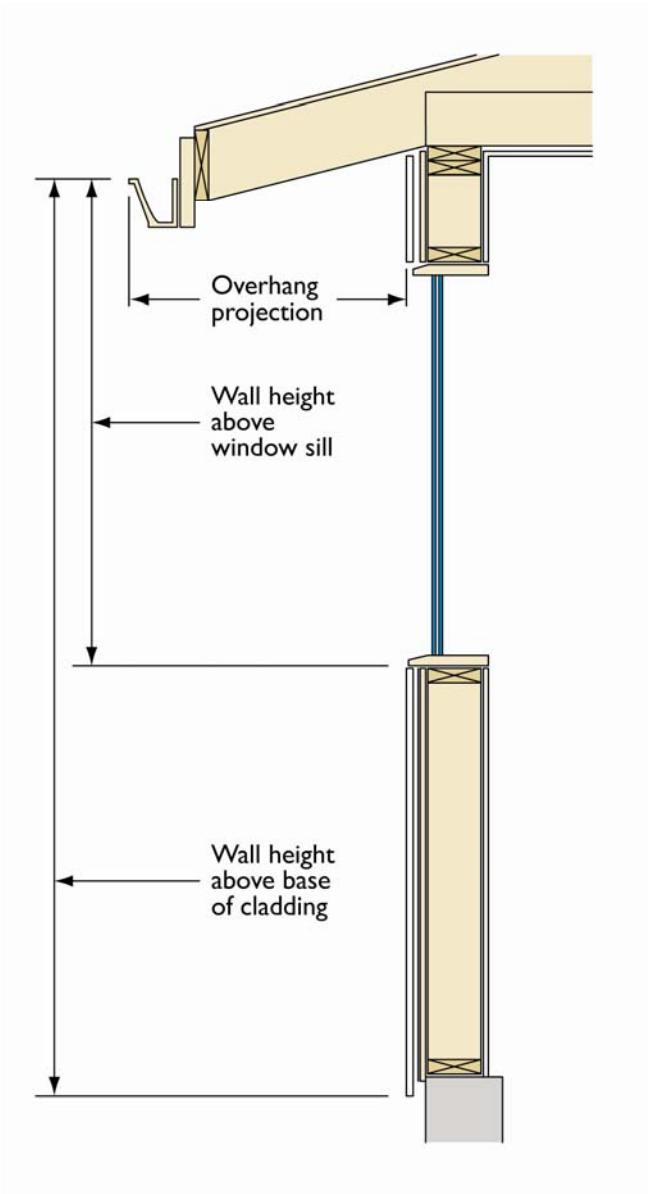

Figure 3.2 Overhang Ratio

The center bar on the nomograph in Figure 3.3 is thus divided into 3 zones categorized by climate zone and as described above: Zone 5B, 4C, and 4C*. 4C* being those cities located directly on the coast or with rainfall equal to or greater than 39 inches.

Local Terrain: Site-specific factors, including local terrain (such as adjacent buildings and trees) and orientation, influence the extent to which a building and the enclosure are exposed to wind and rain.

Overhang Ratio: The ratio of the width of a projection divided by the height above the base of the element that the projection protects. Figure 3.2 to the left illustrates this ratio.

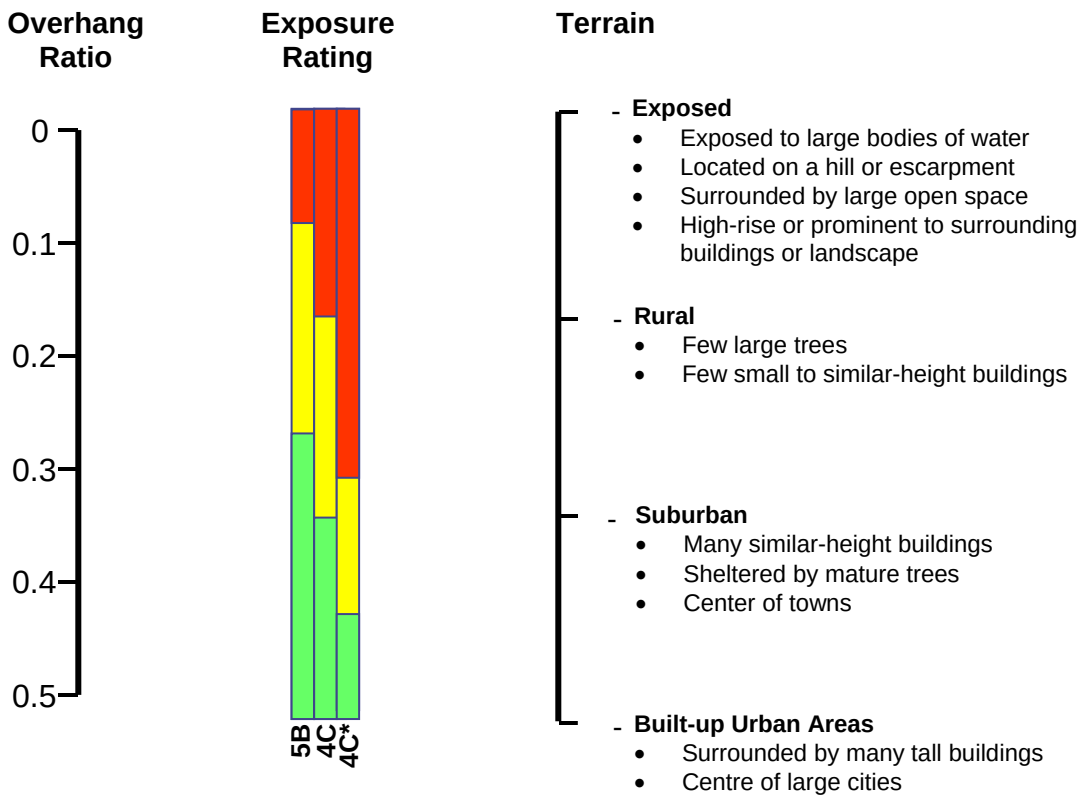

Overhang Ratio = $\frac{\text{Overhang Width}}{\text{Wall Height}}$

Where: Wall Height is the height above the lowest affected element (sill of window if considering a window).

Overhang Width is the horizontal distance between the outer surface of the cladding or window and the outer surface of the overhang.

5B and 4C refer to the Climate Zone per 2010 OEESC.
4C* indicates a city directly on the coast (e.g. Canon Beach, Astoria, Oceanside, etc.) or a city with 39 inches or more annual average rainfall.

Exposure Rating

- **High Exposure**
- **Moderate Exposure**
- **Low Exposure**

Figure 3.3 Exposure Nomograph

Exposure Rating

The exposure rating derived from the nomograph provides one tool for the consultant to determine the appropriate design strategy for the rehabilitation assemblies. This tool is not the only one that will determine the design strategy. The consultant will need to consider other project-specific aspects to determine the most appropriate solutions. The descriptions below summarize design philosophies that may be associated with each exposure rating.

High Exposure: The combination of climate, overhang ratio, and terrain results in wall assemblies that regularly remain wet for long durations and are subjected to significant wind exposure. Assemblies should be designed to accommodate these severe conditions. Rainscreen design strategies are considered the minimum basic standard of care in this category. Pressure-moderated designs should be considered in combination with robust weather barrier assemblies. Air barrier systems can significantly benefit these walls by reducing the driving forces associated with rain penetration through imperfections in the assemblies.

Moderate Exposure: These wall assemblies are often wet under normal service conditions. Assemblies should be designed to accommodate regular wetting through the duration of the winter months. Rainscreen design is appropriate. Although pressure moderation strategies may not be necessary, some ability to the vent the drained cavity is warranted and beneficial. Air barrier systems will provide benefit to these walls by allowing cavity ventilation without introduction of air leakage through the wall assembly.

Low Exposure: These walls often remain dry during regular service conditions and can be designed with code-minimum strategies. Rehabilitated walls should include a drained cavity as defined by the 2010 OSSC. Target repairs may maintain code compliance as required by 2010 OSSC for additions, alterations, renovations, or repairs.

3.4.3 Controlling Other Moisture Sources

The sections above discuss the primary source of moisture as rainwater. However, there are other sources to be considered:

- Air leakage
- Vapor diffusion
- Construction moisture

Air Leakage Control

In new construction it is common practice, and relatively simple, to define a distinct air barrier and to ensure a consistent plane of airtightness throughout. For remedial projects it is often not clear if there is a distinct air barrier, and if not, what material or assembly is likely providing the most airtight aspect of the construction.

What is an air barrier?

First and foremost is the concept of an air barrier as a system rather than a material. An air barrier system, as defined by the Air Barrier Association of America (ABAA), is:

> *A system of building assemblies within the building enclosure—designed, installed and integrated in such a manner as to stop the uncontrolled flow of air into and out of the building enclosure.*

An air barrier system is made of air barrier materials, components, and assemblies. For more information on the definitions and relevant standards associated with air barriers, the consultant should reference the ABAA website:

www.airbarrier.org

Air barriers provide 3 primary functions within the building enclosure.

- They reduce inward airflow and thereby reduce the likelihood of water penetration.
- They reduce outward airflow and thereby reduce the potential for condensation formation in the wall.

- They reduce airflow bidirectionally and thereby reduce the overall energy requirement of the building.

Air Leakage Requirements in the OEESC

Chapter 4, Section 404.8 addresses air leakage for assemblies that separate exterior from interior conditioned spaces.

Windows, swinging doors, and sliding doors shall be tested under *ASTM E 283 – Standard Test Method for Rate of Air Leakage through Exterior Windows, Curtain Walls, and Doors Under Specific Pressure Differences Across the Specimen*.

Maximum air leakage when tested at 1.57 psf (75 Pa) shall be:

1. Windows - 0.37 cfm (0.17 L/s per m) per foot of sash crack.
2. Swinging Doors - 0.37 cfm per square foot (0.17 L/s per m^2) of door area.
3. Sliding Doors - 0.37 cfm per square foot (0.17 L/s per m^2) of door area.

404.8.2 Sealing required. Exterior joints around windows and door frames; between wall cavities and window or door frames, between wall and foundation; between wall and roof; between wall panels; at penetration or utility services through walls; floors and roofs and all other openings in the exterior envelope shall be sealed in a manner approved by the building official.

Chapter 5 requirements are similar, with slightly more stringent air leakage values of 0.3 cfm/ft^2 at 1.57 psf for windows, doors, curtain wall, and storefront. Required sealing, as defined in 502.4.3 is similar in intent to its Chapter 4 corollary. In addition, Chapter 5 addresses some other unique conditions, such as loading docks, vestibules, intake and exhaust openings, and recessed lighting. Consultants should familiarize themselves with the code.

Should you add an air barrier?

In most cases adding an air barrier to parts of an enclosure will not adversely affect the remaining areas and will provide the benefits listed above. When all areas of the enclosure are rehabilitated, there is the potential for significant energy and overall performance improvement. There may also be potential for the reduction of ventilation air into the building. Although this should not be a deterrent to adding an air barrier, it should be considered and addressed in the design. The consultant must assess the benefits and potential detriments of adding an air barrier.

What is the existing effective air barrier?

For most rehabilitation projects the air barrier is not well-defined in the design documents. Therefore, the consultant must determine which component of the existing assembly is providing the most airtight plane. If a new air barrier is being implemented on a partial rehabilitation, the new air barrier must be connected to the effective existing air barrier.

The design should not reduce the overall airtightness of the building unintentionally. Designers often overlook this when upgrading a face-sealed or concealed barrier assembly to a drained cavity assembly. Where the existing cladding may have provided a relatively airtight plane, the newly ventilated cavity will not. In this case, it is prudent to design a new air barrier in the rehabilitated zones.

How do we provide an air barrier?

In new construction, there are multiple ways to develop an effective air barrier system. In rehabilitation, however, the consultant is limited by the extent of demolition associated with the project and the extent to which the existing construction can be modified. For most wood-framed, low-rise buildings that undergo exterior wall rehabilitation, air barrier construction is performed outboard of the interior sheathing plane to avoid additional interior disruption. The following is a list of the 4 most commonly and effectively utilized approaches:

- Sealed or taped exterior sheathing
- Taped, vapor-permeable sheet weather and air barrier
- Fluid-applied, vapor-permeable weather and air barrier

- Spray polyurethane foam insulation within the stud space

Other methods may be viable and should be assessed by the consultant. Each of the methods has a proven performance track record of success. The consultant should assess the cost-benefit and construction-related attributes of each to determine the best solution for the specific project's needs.

Whatever the design, the air barrier must be capable of resisting the lateral wind loads for the design life of the assembly.

Vapor Diffusion Control

In most cases, vapor diffusion control for wood-framed buildings in Oregon is provided in the original construction by either a polyethylene sheet membrane just outboard of the interior sheathing or a foil/Kraft facer on the inboard side of the batt insulation. In many cases of rehabilitation, this vapor control layer can remain intact and will likely be sufficient for continued service. In the latter case, and if batt insulation is being removed as part of the rehabilitation, a new vapor diffusion control layer may be required. In rehabilitation, the most common methods are:

- Foil/Kraft facers on batt insulation
- Closed-cell polyurethane foam spray between studs
- Low-permeability vapor control paints

As noted in Section 3.3.2 above, energy upgrades to existing buildings may include addition of insulation outboard of the exterior wall sheathing. This exterior insulation will change the hygrothermal characteristics of the wall assembly, potentially reducing the capacity of the wall to dry to the exterior. The consultant will need to assess the new assembly for its ability to control vapor transport and for the locations of potential condensation planes. Certain insulation materials, such as rigid polystyrene board, has relatively low vapor permeability and when placed adjacent to a vapor permeable weather barrier, can limit drying to the exterior and may become a condensation plane. Water that condenses on this surface could result in excessive wetting on the face of the weather barrier. Alternatively, vapor permeable insulations such as mineral wool can provide thermal functionality while maintaining drying capacity.

Although there are many "rules of thumb" provided in the industry that describe the safe amount of insulation that can be added to the exterior of sheathing while maintaining interior batt insulation and existing vapor control layers (commonly referred to as a "split insulation" design), there are too many variables that remain to effectively rely upon those rules. The consultant must evaluate each condition as a unique circumstance and assess the implications of such design modifications.

Ventilation

Building enclosure rehabilitation will often result (intentionally or not) in a more air-tight enclosure. Many multiunit residential wood-framed buildings lack effective or intentional ventilation strategies and rely heavily upon air leakage through the enclosure. An overall reduction in interior ventilation is often a result of the rehabilitation work.

OSSC Chapter 12 requires only natural ventilation through operable windows and doors. However, many buildings exhibit moisture related problems resulting from inadequate ventilation due either to poor design, occupant lifestyle, or a combination of the two. Many of these problems can be addressed simply by adding constant running or timed fans in bathrooms and kitchens, adding passive vents in exterior walls, or by modifying fan cycles in combination with exterior make-up air adjustments to forced-air furnaces.

Ventilation strategies should be reviewed during the design phase and often require the attention and consultation of specialized consultants.

Construction Moisture

It is imperative that the rehabilitation efforts do not trap construction moisture within the walls. Due to the

sensitive nature of the enclosure work and its proximity to finished interior spaces, it is common practice, and recommended, to utilize scaffolding with weather screen wrap. Contrary to new construction, the wall assembly materials in rehabilitation typically don't have the ability to dry to the interior, since finishes often remain intact during the work. Wood sheathing and framing should not be covered until moisture contents are below 19% as verified using pin-type moisture meters. The consultant should take measurements in multiple areas representative of the various exposure conditions.

3.5 Architecture & Zoning

This section addresses issues which may have an impact on existing buildings, both from local construction ordinances and style.

3.5.1 Architecture

One of the challenges the consultant must address is the architectural and aesthetic modification that an enclosure repair program may have on the building. Where full rehabilitation will be performed, the consultant and owner have an opportunity to modify the aesthetics of the exterior with wide liberty. In this case, the redesign is more similar to new construction. However, where partial rehabilitation will be performed, there will be a general design to maintain the existing aesthetic to the extent possible in order to match the adjacent similar conditions. This may be difficult and become problematic when the consultant will also need to meet the recommendations made in this guide.

The consultant and owner will need to balance the needs of the building and the aesthetic requirements of the owner. The consultant and owner should bear in mind that aesthetic concerns should not prevent repairs that are necessary to protect the building. However, the practices described herein are provided for guidance to current design concepts. As such, the consultant should not be limited in his or her ability to creatively develop alternative detailing that results in a similar technical solution with an alternative aesthetic.

This guide encourages the use of physical mock-ups to see how new design solutions might be compatible with existing conditions, as well as provide the ability to test the details for their actual level of performance.

3.5.2 Zoning

Zoning is a device in land use planning utilized by most local jurisdictions. Zoning laws may regulate building height, lot coverage and use, building materials, or building colors to promote or enhance a particular character of a community. Review and approval of zoning regulations often occurs at the beginning of the design process, which is typically far in advance of building permit submissions. As such, the owner and consultant should research local zoning requirements to determine if there are encumbrances or requirements that may limit redevelopment or impose excessive cost to a project. Public hearings, for example, may be part of the process that could result in extending the time commitment and cost of approvals. Over time, zoning laws may be revised and may result in more extensive requirements than at the time of the original construction.

Rehabilitation work on buildings designated as historic or within historic districts is subject to much more stringent aesthetic modification requirements. The consultant should be familiar with these requirements, as they usually have significant impact on the overall design and repair decisions.

3.6 Durability

This guide does not address the broad topic of durable and sustainable design and construction practices. There are a number of good resources on this topic. However, this guide does present some discussion of the value of durable and sustainable practices as they relate to building enclosure rehabilitation.

Merriam-Webster's Collegiate Dictionary, Eleventh Edition, (Merriam-Webster's) defines *durable* as "able to exist for a long time without significant deterioration." With regards to building materials, it is reasonable then

to extrapolate the definition to consider durable materials as those which may require less maintenance due to deterioration or those that require less frequent replacement. For example, a protected waterproofing membrane below concrete pavers is typically more durable than a surface-applied exposed traffic coating. Leaving the specific material properties out of the comparison, the concealed waterproofing membrane will not be subject to environmental or mechanical degradation and will require less maintenance over its life span.

In evaluating or selecting building materials, the overall Life Cycle Cost (LCC), including maintenance and replacement cost, must be considered in addition to initial construction cost. Durable materials will frequently have a higher initial cost; however, their LCC may be lower as a function of their overall durability.

Beyond the hard costs associated with LCC are the soft costs and non-dollar factors associated with material selection. One significant factor may be the embodied energy, environmental impact, or other such social or political factors. These factors may carry more importance to the owner than cost. Many of these factors are collected into the overall category of Sustainability.

3.7 Sustainability

Merriam-Webster's defines *sustainability* as "of, relating to, or being a method of harvesting or using a resource so that the resource is not depleted or permanently damaged." There are likely many differing opinions of this definition. However, the common thread in most accepted definitions is that, to be sustainable, a material should also do as little detriment to the environment as practically feasible.

Within a rehabilitation project on wood-framed multiunit buildings, there are many opportunities to include sustainable principles. These opportunities can be captured in 3 categories:

- Use resources efficiently (i.e., use less energy, water, and materials),
- Maximize occupant health and improve the quality of the indoor environment (i.e., make sure what you use is healthy).
- Reduce waste, pollution, and environmental degradation (e.g., when you are done using it, turn it into something that is useful for others: recycle).

3.7.1 Resource Efficiency

Improving energy efficiency is a significant potential benefit of an enclosure rehabilitation. Reducing air infiltration and exfiltration, improving wall thermal efficiency, and improving window and door performance will significantly reduce energy loss and consumption. Other improvements, such as adding porches or awnings or planting deciduous trees for summer shading, may not only reduce the conditioning energy load but may also improve occupant comfort. Many other improvements fit into this category, such as plumbing fixture retrofits, controls upgrades, and items as simple as provisions for laundry clotheslines.

3.7.2 Quality of the Indoor Environment

Better energy efficiency often leads to improved occupant comfort resulting from fewer drafts and less variation in indoor temperature. The choice of indoor finish materials will also play a part; emphasis should be placed on materials that release little or no volatile organic compounds (VOCs) into the occupied space. People with environmental sensitivities and medical conditions (e.g., asthma) need homes with good air quality. Controlled ventilation strategies should always be considered during rehabilitation. Supply and exchange of fresh air is critical to a quality indoor environment. Plentiful access to daylight and an exterior view also contribute.

3.7.3 Reduction of Environmental Degradation

There are many places to intervene in the waste cycle. Recycling facilities for household items should be easily available, including yard waste and compost where

possible. Demolition and construction waste should be minimized during the rehabilitation process, salvaging as much usable material as possible and recycling the rest appropriately so that there is minimal landfill material. Using materials that do not contribute to environmental degradation in their manufacture or disposal also fit into this category.

However, the consultant and owner should bear in mind that use of "environmentally friendly" materials that are not "durable" may be contradictory to the overall objective.

3.8 Assembly Components and Concepts

This section examines the performance of wall, window, roof, deck, and balcony assemblies. In addition, this section provides guidance regarding two related elements of wood-framed buildings: assemblies that are external to the building enclosure (walkways, divider walls, etc.) and crawl spaces. Chapter 4 considers building enclosure performance at details, either where assemblies intersect or where various penetrations of the assemblies occur.

The intent here is to assist in the selection of appropriate assemblies. The generic assemblies presented are representative of those likely to be considered in wood-framed, residential rehabilitation and are used to develop the details presented in Chapter 4.

The consultant will undoubtedly desire to use variations of the assemblies shown as well as other assemblies not presented in this guide. In either case, the consultant should appropriately consider each of the variables affecting heat, air, and moisture control. Hygrothermal simulation or performance testing of new or alternate assemblies may be required to confirm their performance characteristics.

The assemblies are presented in fact sheet format and include a description of the assembly as well as a discussion of key attributes of each assembly.

3.8.1 Critical Barriers

This guide uses the term *critical barrier* to refer to materials and components that together perform a control function within the building enclosure. The industry has commonly considered and defined some critical barriers within an enclosure assembly, such as a vapor retarder or air barrier. This guide also refers to a "water-shedding surface" and a "water-resistive barrier" to facilitate a discussion of water penetration control strategies.

The **water-shedding surface (WSS)** refers to the outer surface of assemblies, interfaces, and details that deflect and/or drain the vast majority of the exterior water impacting on the assembly. For wall assemblies the water-shedding element is the cladding: wood siding, vinyl, masonry veneer, or a variety of other materials. For windows the water-shedding surface is a combination of the outer portion of the frame, exterior gaskets, glazing tape or sealant, and the insulating glass unit (IGU). For roofs it is the shingles, metal roofing, or membrane.

The **water-resistive barrier (WRB)** is the surface farthest from the exterior that can accommodate moisture without incurring damage to interior finishes or materials within the assembly. It is not always easy to establish this surface since some surfaces can accommodate small amounts of moisture for a limited time without damage, while larger quantities of water or longer exposure to moisture will lead to premature deterioration or migration of moisture further into the assembly. For many wall assemblies, the water-resistive barrier is the sheathing membrane in combination with flashing and sealants at penetrations.

For better window frames, the area functioning as the water-resistive and air barrier is likely to be the interior portion of frame members in combination with gaskets, glazing tape, or sealants that are not directly exposed to the exterior. Note that the glazing in windows is both the water-shedding surface and the water-resistive barrier. This illustrates the general point that specific

materials within an assembly may perform several critical barrier functions.

The amount of water that reaches the water-resistive barrier is dependent on a variety of factors impacting the exterior environment (discussed earlier in this chapter), as well as on the continuity of the water-shedding surface. In assemblies where the water-shedding surface and water-resistive barrier are distinct layers, the assembly has two lines of defense against water penetration. Even better control of water penetration can occur when two lines of protection are provided with a drainage space between them and when an air barrier is incorporated to control driving forces. This is fundamentally the definition of a rainscreen water penetration control strategy.

The **air barrier (AB)** controls the flow of air through the elements of the building enclosure, either inward or outward. Air flow is a significant variable with respect to space conditioning costs, condensation control, and rain penetration control. The challenge is to achieve continuity of air barriers throughout myriads of interface and penetration details.

Sheet polyethylene, or Kraft facing on batt insulation located to the exterior side of the interior gypsum board, is often used as the **vapor retarder**. The vapor retarder limits the flow of water vapor through materials and is important with respect to condensation control.

Although not specifically addressed as a critical barrier, the thermal insulation must be considered together with the vapor permeability of various materials in assemblies in order to control condensation and, of course, is relevant to space heating and cooling.

The insulated wall and roof assemblies shown in this guide have insulation placed at several alternate locations within the assembly. The location of the insulation has been used as a differentiator for these assemblies as follows:

Interior Insulation: The insulating layer is located to the interior side of the water-resistive barrier. For walls, this typically means that the insulation is located within the stud space. For roofs, the interior insulation may be located above the sheathing but under the roof membrane or, alternately, below the sheathing within the roof framing. Both are considered to be "interior insulated".

Exterior Insulated: The insulating layer is located to the exterior of the water-resistive barrier, in the wet zone. For walls, this means that the insulation is located within the drained cavity space, while for roofs it means that the insulation is located above the membrane (commonly called IRMA, or Inverted Roof Membrane Assembly).

Split Insulation: More than one insulating layer is provided, typically with one layer to the interior and one layer to the exterior of the water-resistive barrier. While this arrangement is possible for both roofs and walls, only wall examples have been utilized within this guide.

The discussion of the material properties, location, and continuity of these four critical barriers together with the thermal insulating layers of building enclosures is a recurring theme in this guide. In this chapter they are discussed in the context of specific assemblies, while in Chapter 4 the focus is on continuity at interface and penetration details.

3.8.2 Assemblies External to the Main Environmental Separator

Some external elements are not environmental separators and may not necessarily be considered part of the building enclosure. Examples include walkway structures, divider walls between balconies, and external columns. They do not separate indoor and outdoor environments and therefore are not subjected to some of the major driving forces for both wetting and drying. They are usually uninsulated assemblies, although sometimes they are acoustically insulated. In most cases these elements still need to manage external moisture

sources in the same way other building enclosure assemblies do. These elements usually can only dry to the exterior if wetted. While none of these assemblies are presented in this chapter, they should be designed, detailed, and constructed to meet the same water penetration performance criteria as an insulated wall assembly for given exposure conditions. In addition, concealed spaces should be vented to the exterior and constructed with pressure-treated wood.

3.8.3 Crawl Spaces

Two basic strategies exist for controlling heat, air, and moisture in crawl spaces. They can be considered as being entirely outside the structure, with all of the special considerations attendant to that situation (See Section 5.3). Alternately, they can be considered part of the indoor environment and constructed with the same attention to heat, air, and moisture control as the upper stories.

Within crawl spaces, as in full basements, ensuring proper drainage, preventing wood from coming in contact with moisture sources, installing effective ground cover, and ensuring proper air exchange in the space are needed to ensure that conditions for maintaining a durable structure are present.

Where existing site drainage results in wet grade in crawl spaces, the consultant will need to consider remedial options with civil and landscape consultants. These issues are beyond the scope of this guide. However, solutions often include perimeter perforated drain pipe systems, sump pumps, or French drains.

3.9 Above-Grade Wall Assemblies

Three different wood-framed wall assemblies are presented in this section. They reflect common considerations of insulation, air barrier systems, and cladding. Variations on these basic wood-framed assemblies should be easy to develop based on the information provided in the assembly fact sheets at the end of this Section.

3.9.1 Rain Penetration Control Strategies for Wood-Framed Walls

Several rain penetration control strategies are commonly used for walls. They include concealed-barrier, drained-cavity, and rainscreen strategies. They are discussed below utilizing some of the critical barrier concepts and building science principals presented earlier in this section.

Oregon Building Code on Drained Cavities

Effective October 1, 2009, the Building Codes Division issued a Midcycle Amendment to the ORSC Section R703.1. With this amendment, the code requires the building enclosure to consist of:

> "… an exterior veneer, a water-resistive barrier, a minimum 1/8-inch gap, and integrated flashings, which when properly assembled together provide a means of draining water that enters the assembly to the exterior."

The Amendment provides several exceptions accommodate mass concrete or masonry construction, as well as other materials. The consultant should be familiar with this amendment.

The above passage provides clarification to prior existing language requiring a "means of draining water" behind the cladding.

Although not yet specific to the OSSC, most industry professionals assume this clarification to the ORSC to be consistent with similar language in the OSSC that requires a "means for draining water."

A **face sealed** strategy combines the water-shedding surface, the water-resistive barrier, and the air barrier into one layer at the exterior of the assembly. This strategy relies solely on the elimination of all holes through the cladding. In current practice, this strategy is not considered a viable one for weather-exposed conditions, it is important to understand the frame of reference in cladding design, as many of the rehabilitation projects that will reference this guide may include face sealed walls.

Assemblies using a face sealed strategy have proven to be unreliable, because installing and maintaining perfect

and durable seals at all joints and intersections between assemblies is very difficult. Even if the problem of job site inaccuracies and imperfect workmanship could be overcome and a perfect seal could be achieved initially, the materials used to seal all openings are exposed to extremes of weather and to movements of the building. These factors will eventually cause the deterioration and failure of the seals, creating openings through which water can pass.

The lack of drainage or venting of the cladding in face seal assemblies, combined with the use of cladding or finishes with moderate or low vapor permeability, also limits the ability of these assemblies to dry, making them very sensitive to moisture. Water that does get in can accumulate over long periods of time.

A **concealed barrier** assembly provides a water-shedding surface as the cladding and includes a water-resistive barrier located at the sheathing membrane. Although this strategy may be more durable than face-sealed systems with regards to water penetration resistance, the concealed barrier does not address the need for drainage as identified by the building codes and lacks an air space between the WSS and WRB. This omission can significantly limit drainage and drying capability, depending on the cladding type. This strategy is not suitable for whole-wall or whole-building rehabilitation but may be appropriate for small-area targeted repairs, depending on the consultant's interpretation of the associated risk.

A **drained cavity** assembly advances upon the concealed barrier by providing a drainage space between the WSS and the WRB. The code amendment described in the highlighted text box above requires, at a minimum, a drained cavity assembly. One noted exception to the 1/8-inch gap between the WSS and WRB in Section 703.1 is the allowance of a qualified drainable-type WRB material. Although provided for as an exception in the code, these drainable weather barrier products provide little additional capacity for drainage compared to traditional WRB materials and should be used with caution and careful attention by the consultant. These products may be suitable where small-area targeted repairs are being implemented.

A **rainscreen** water penetration control strategy for wood-framed walls may appear similar to a drained cavity control strategy in that it contains many of the same characteristics:

- A continuous water-shedding surface
- An air space behind the cladding to facilitate drainage and drying
- A WRB such as vapor-permeable sheathing membranes placed on the exterior face of the wall sheathing
- Drain holes or gaps through the cladding so the water can leave the cavity, with flashing at the wall base, doors, and windows, etc., to direct the water to the outside

However, rainscreen walls differ from drained cavity walls in that they also include:

- A continuous air barrier system (various materials and locations within the backup wood-framed wall portion of the assembly are possible), and
- Ventilation of the drainage space between the cladding and weather barrier to the exterior

The presence of the lines of resistance (WSS and WRB) separated by a drained and ventilated cavity in rainscreen construction provides enormous benefit. Holes in the inner and outer surface are generally not aligned, so direct rain passage by momentum is eliminated. Water that passes through the outer surface (the rainscreen) is driven either by gravity, capillary action, or air pressure differences. It tends to run down the interior side of the cladding where it can be intercepted and drained back to the outside at a cross-cavity flashing location. These features mean that the amount of water reaching the inner surface of the cavity and remaining in contact with potentially moisture-sensitive materials is greatly reduced.

Openings at the top and bottom of each section of wall cavity also encourage the circulation of outdoor air

through the cavity to help dry the minor amounts of water that may have accumulated on materials within the cavity. Together with the other features of rainscreen walls noted above, it creates a ventilated rainscreen wall assembly.

The provision of an effective air barrier within the stud wall assembly together with some compartmentalization of the cavity are the most critical aspects of moderating air pressure drop at the cladding. Vent area is another variable; generally the greater the vent area, the more responsive the cavity is to pressurization. Pressure-moderated rainscreen walls somewhat improve the effectiveness of the assembly in managing rain penetration because they further limit the amount of water that passes beyond the water-shedding surface.

This guide does not differentiate between rainscreen and pressure-moderated rainscreen assemblies in the fact sheets, since the differences in these assemblies are primarily associated with compartmentalization details. Compartmentalization, other than at corners, provides only minimal incremental improvements in performance for the types of buildings and assemblies for which this guide is intended. The cross-cavity flashing and vertical strapping that are commonly utilized in wood-framed construction do provide some compartmentalization.

It is important to note that the use of rainscreen wall assemblies that have good water penetration resistance and are fundamentally less sensitive does not eliminate the need for good details and good construction practices. Details are generally the sources of water entry, and the majority of these are addressed in Chapter 4.

3.9.2 The Four Ds

Although perhaps an oversimplification of building science, the Four Ds (Deflection, Drainage, Drying, and Durability) provide a ready reminder of the considerations and priorities in achieving a balance between wetting mechanisms and moisture removal mechanisms for walls.

Deflection: Using components and features of the building to limit exposure of assemblies to rain. These include:

- Overhangs that protect an assembly from direct exposure to rain.
- Flashing with drip edges that divert water running down surfaces and direct it off the face of the assembly.

Drainage: Using drainage surfaces within cavity assemblies to redirect any water that enters the enclosure to drain back to the exterior.

Drying: Using features that speed the drying of wet materials.

Durability: Using assemblies and materials that are tolerant of moisture.

Deflection is the first priority in assuring moisture removal. If most of the water is diverted before it has a chance to enter and impact an assembly, then drainage and drying requirements are significantly reduced.

Drainage is the next most important principle. Provision for the drainage of large quantities of water is important in wet environments. This is a major advantage of drained cavity or rainscreen wall assemblies. Sloping decks, balconies, walkways, and roofs is fundamental for effective drainage of nearly horizontal features. An air space to the outside of the drained surface is generally required for good drainage.

Properly detailed flashing must intercept draining water at appropriate locations and direct it to the outside. Flashing should be sloped to the outside. When the flashing is interrupted, it should have end dams to stop water running off the ends into the building. Poor flashing detailing is a major cause of moisture problems in buildings.

The drying ability of an insulated wood-framed assembly depends on a number of variables including the vapor permeability of layers within the assembly, the adjacent environmental conditions, venting capability, and the

geometry of the building. While drying can generally not be relied upon as the primary moisture management strategy for an assembly, assemblies should be designed and constructed to incorporate features that facilitate drying. The consideration of these variables can result in walls that are less sensitive to the presence of minor amounts of moisture.

Durability requires that the surface upon which moisture accumulates, or where moisture is stored within the material, is durable enough to accommodate the moisture until it drains or dries. Therefore, viable moisture management strategies use materials that are not susceptible to moisture damage, such as stainless-steel fasteners and pressure-treated wood products.

3.9.3 Insulation and Strapping

With the requirements of the 2010 OEESC, designers will need to pay significant attention to the insulating values of wall assemblies. Although this guide provides assemblies that are appropriate for construction within the OEESC requirements, it does not address the methods of achieving these insulating values or the comparison of values between wall assembly types. In the event that the rehabilitation program requires conformance with energy codes for new construction, the reader should reference the corollary to this guide for new construction design practices.

Similarly, this guide does not address materials appropriate for rainscreen strapping, as these material considerations are presented in the corollary guide.

Insulating Sheathing

Insulating sheathing products are gaining popularity with new energy code requirements. OEESC Chapter 4, Table 404.1(2) provides prescriptive path compliance options for approved default wall U-factors. Some of these walls include a combination of in-wall batt insulation and exterior insulation sheathing.

Many of the materials available today are designed assuming the exterior face of the sheathing to be effective as the water-resistive barrier. If insulation sheathing is used, the consultant should pay particular attention to:

- Continuity of the WRB at the sheathing and adjacent material transitions.
- Continuity of the WRB at panel joints (if tapes are used, reverse laps may entrap water at horizontal tape joints). Joints should allow differential movement of panels without degradation of the WRB.
- The effect of strapping fasteners through the sheathing (and WRB).

More discussion of insulation sheathing is presented in the corollary guide on new construction design practice.

Continuous Insulation (ci)

OEESC Chapter 5, Table 502.2(1) provides prescriptive path building envelope requirements for opaque assemblies. In most cases, continuous insulation (ci) is required for compliance. ASHRAE defines continuous insulation as "insulation that is continuous across all structural members without thermal bridges other than fasteners and service openings. It is installed on the interior, exterior, or is integral to any opaque surface of the building envelope." This definition implies that continuous rainscreen furring that interrupts the insulation plane is no longer compliant. In some low-rise cases, furring may be installed outboard of rigid insulation (see Wall Assembly W-4). Where structural capacity of the attachment does not allow this method, alternative methods are required, such as intermittent clips.

3.9.4 Assembly Fact Sheets

As discussed earlier in this chapter, this guide focuses on the common considerations in the rehabilitation of wood-framed assemblies and pays particular attention to

the management of rainwater penetration. As such, this section focuses discussion on the most common assemblies. Correlating to the exposure discussion in Section 3.4.2, the consultant will most often be faced with consideration of rehabilitated wall assemblies in two categories:

- Targeted or localized repairs
- Whole-wall or whole-building repairs

Where targeted repairs are utilized, new assemblies need to be compatible with existing adjacent assemblies. In this case, the depth of the assembly must remain unchanged, and the ability to implement newer rain penetration control strategies (e.g., rainscreen) may be limited.

Where whole-wall or whole-building repairs are implemented, there is greater ability to change the assembly depth and to implement more robust water management strategies.

The fact sheets presented at the end of this section represent a variety of the most common assemblies used in wood-framed rehabilitation projects. Targeted (and low-exposure, whole-wall) repairs will likely consider Wall Type W-1, whereas whole-wall and moderate- to high-exposure repairs will consider Wall Types W-2 and W-3.

The wall fact sheets present information regarding the assemblies in 6 categories:

- water-shedding surface
- water-resistive barrier
- air barrier
- vapor retarder
- application
- factors limiting performance

Water-Shedding Surface

Fact sheets include a description of the materials that composes the WSS, as well as characteristics of the surface that need to be considered in the selection of the assembly.

Water-Resistive Barrier

The WRB can be formed by a wide variety of materials and can be exposed to more or less moisture in the various assemblies, depending on the water penetration control strategy used and the continuity of the WSS. The fact sheets describe the WRB, possible materials, and comments on the drainage and drying characteristics of the WRB.

Air Barrier

Assemblies such as walls and roofs can utilize a variety of air barrier strategies without significantly impacting the assembly selection. The focus for air barriers associated with these assemblies needs to be on continuity among details, which is presented in Chapter 4. The air barrier discussion for these assemblies will therefore focus on the layers in a wall or roof that may be selected to perform the function.

For windows, the air barrier is an integral part of the frame and glazing system. The discussion will therefore identify the components of the air barrier surface within the window.

Vapor Retarder

Most of the wall and roof assemblies shown use polyethylene located to the exterior side of the interior gypsum board as the vapor retarder. As noted earlier in this chapter, the existing vapor retarder in the wall assembly can often remain in place. Where batt insulation with Kraft facer is replaced, other considerations may be necessary. The consultant will need to consider the constructability aspects of the repair design. The discussion regarding vapor retarders will focus on the sensitivity of the assemblies to drying and the vapor permeability of other layers within the assembly. Split insulation assemblies are particularly vulnerable to the location of insulation and vapor-impermeable materials.

Again, windows are different because most of the materials used in the construction of a window are

inherently vapor-impermeable. This guide does not discuss vapor retarders associated with windows.

Application

Performance expectations for the assemblies in different exposure conditions are discussed, as well as any other factors that may determine whether a particular assembly is an appropriate selection for particular environments.

Factors Limiting Performance

The actual life expectancy of assembly materials is very dependent on a variety of in-service factors such as exposure, climate, and maintenance. The discussion therefore focuses on appropriate selection of materials and components for assemblies so that the design service life and functions of the assembly may be realized.

The discussion deals with the relative durability of particular components in the assembly. Performance may also be limited by, or are sensitive to, particular maintenance and renewal activities. The design team should prepare an appropriate plan. Maintenance and renewals planning is discussed further in Chapter 8.

W-1: Type 1 Wall Assembly – Existing Air Barrier or Exterior Air Barrier

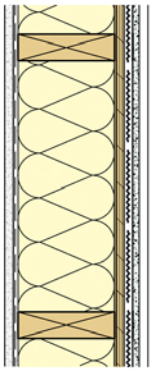

Plan View

EXTERIOR
- Cladding
- Vapor-Permeable Drainable Sheathing Membrane (WRB)
- Sheathing
- Existing Wood Framing with Existing or New Batt Insulation
- Polyethylene Film (or Kraft Facer on Batt)
- Gypsum Board

INTERIOR

WATER-SHEDDING SURFACE

This wall assembly anticipates control of the majority of exterior moisture at the exterior cladding, while recognizing that some incidental moisture will likely migrate beyond the exterior cladding. There is little capacity for this incidental moisture; therefore this assembly should be used with caution or for targeted repair areas only. Note that vinyl siding tends to permit a greater amount of moisture to penetrate past the water-shedding surface than other cladding materials. This moisture has some capacity to drain down the WRB behind the exterior cladding and out of the assembly at cross-cavity flashing locations. The lack of air space further limits drying of the drainage space through ventilation or evaporation.

WATER-RESISTIVE BARRIER

The water-resistive barrier is the vapor-permeable sheathing membrane. There are a variety of sheet products that could be used, as well as some liquid-applied products. If nondrainable membranes or liquid products are used, additional consideration must be given to provide a code-compliant drainage gap. The sheathing membrane needs to be vapor-permeable to allow for some outward migration of vapor, thereby minimizing condensation within the wall assembly.

AIR BARRIER

For many rehabilitation projects, this assembly will be used assuming that the addition of an air barrier will not be implemented or that a new air barrier will be provided at the exterior sheathing plane. This assembly could be easily modified to accommodate several air barrier strategies. Details within this guide use the exterior sheathing plane or WRB to provide an air barrier. If the sheathing membrane forms part of the air barrier, then it will also experience much of the wind load. As a result, it must be structurally adequate to support the wind loads in order to resist tearing of the membrane.

VAPOR RETARDER

Polyethylene sheet or Kraft facers on existing batt insulation provide the primary vapor retarder layer. However, this low vapor permeance may not be required in many situations and also limits the amount of drying that can occur to the interior. Vapor retarder paint may also provide an adequate vapor flow control layer. The consultant will need to evaluate the need for a vapor control layer on a project-by-project basis.

APPLICATION AND CODE COMPLIANCE

This and similar assemblies have been used with varied success. This assembly represents the minimum basic code requirement for drainage and should be used in low-exposure conditions. It may also be appropriate for use in moderate-exposure conditions where rehabilitation is limited to small portions of the existing assemblies. This assembly may be compliant with OEESC Chapter 4 requirements. This assembly is NOT compliant with Chapter 5 continuous insulation (ci) requirements.

FACTORS LIMITING PERFORMANCE

The drainage capacity of this assembly is limited, as is the drying capacity. These factors limit the expected performance level of this assembly, and care should be taken if this assembly is selected. Excessive use of adhered waterproof sheathing membranes at interfaces restricts drying to the exterior and should be avoided. Detailing of the cladding and flashing is important in order to restrict the amount of water that penetrates past the water-shedding surface.

W-2: Type 2 Wall Assembly – Exterior Air Barrier

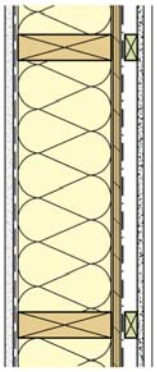

Plan View

EXTERIOR

- Cladding
- Air Space with Pressure-Treated (PT) Wood Strapping
- Vapor-Permeable Sheathing Membrane (WRB)
- Sheathing
- Existing Wood Framing with Existing or New Batt Insulation
- Polyethylene Film (or Kraft Facer on Batt)
- Gypsum Board

INTERIOR

WATER-SHEDDING SURFACE

This wall assembly anticipates control of the majority of exterior moisture at the exterior cladding, while recognizing that some incidental moisture will likely migrate beyond the exterior cladding. This assembly allows moisture to drain through the cavity formed behind the exterior cladding and out of the assembly at cross-cavity flashing locations. Evaporation and ventilation further facilitate drying of the cavity.

WATER-RESISTIVE BARRIER

The water-resistive barrier is the vapor-permeable sheathing membrane. There are a variety of sheet products that could be used as well as some liquid-applied products. The sheathing membrane needs to be vapor permeable to allow for some outward migration of vapor, thereby minimizing condensation within the wall assembly.

AIR BARRIER

This assembly could be easily modified to accommodate several air barrier strategies. This guide uses an exterior air barrier approach for illustration purposes. While it may be possible to utilize the sheathing and associated tapes and sealants as the air barrier, it is more likely that the vapor-permeable sheathing membrane will be utilized as the air barrier. The air barrier must be able to accommodate the structural loads imposed by the wind. Some nonadhered sheet-type membranes with tape may be suitable as the air barrier, but care must be taken to ensure that the strapping provides adequate structural support. Adhered sheet membranes and liquid membranes are gaining popularity and do not have the same structural support issue because they are adhered.

VAPOR RETARDER

Polyethylene sheet or Kraft facers on existing batt insulation provide the primary vapor retarder layer. However, this low vapor permeance may not be required in many situations and also limits the amount of drying that can occur to the interior. Vapor retarder paint may also provide an adequate vapor flow control layer.

APPLICATION AND CODE COMPLIANCE

This and similar assemblies have been commonly used and have a good performance history. This assembly may be compliant with OEESC Chapter 4 requirements. This assembly is NOT compliant with Chapter 5 continuous insulation (ci) requirements.

FACTORS LIMITING PERFORMANCE

The lack of stiffness in some siding products may require closer spacing of strapping to provide adequate structural support. Care is required in placement of strapping, since it must not restrict drainage paths at window jambs. Excessive use of adhered waterproof sheathing membranes at interfaces restricts drying to the exterior and should be avoided. Detailing of the cladding and flashing is important in order to restrict the amount of water that penetrates past the water-shedding surface and to allow ventilation to occur.

W-3: Type 3 Wall Assembly – Exterior Air Barrier, Split Insulation

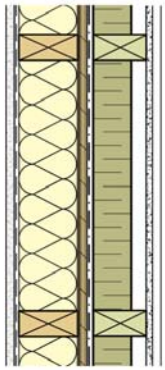

Plan View

EXTERIOR

- Cladding
- Air Space with PT Wood Strapping
- Semirigid Insulation Between Strapping
- Vapor-Permeable Sheathing Membrane (WRB)
- Sheathing
- Existing Wood Framing with Existing or New Batt Insulation
- Polyethylene Film (or Kraft Facer on Batt)
- Gypsum Board

INTERIOR

WATER-SHEDDING SURFACE

This wall assembly anticipates control of the majority of exterior moisture at the exterior cladding, while recognizing that some incidental moisture will likely migrate beyond the exterior cladding. Any moisture that does penetrate past the cladding is allowed to drain through the cavity formed behind the exterior cladding and out of the assembly at cross-cavity flashing locations. Evaporation and ventilation facilitate further drying of the cavity.

WATER-RESISTIVE BARRIER

The water-resistive barrier is the vapor-permeable sheathing membrane. There are a variety of sheet and fluid products that could be used. The sheathing membrane needs to be vapor-permeable to allow for some outward migration of vapor, thereby minimizing condensation within the wall assembly. The insulation placed outboard of the sheathing membrane will also create a drainage surface so that very minimal moisture is likely to reach the sheathing membrane. However, drainage of any moisture that does reach the membrane will be somewhat restricted by the insulation. For this and other reasons presented below, rigid board (e.g., XPS, EPS, or polyisocyanurate) insulation is not ideal, and semirigid products such as mineral wool are favorable.

AIR BARRIER

This assembly could be easily modified to accommodate several air barrier strategies, including utilizing the sheathing and associated tapes and sealants as the air barrier. This guide uses an exterior air barrier approach for illustration purposes. The air barrier must be able to accommodate the structural loads imposed by the wind.

VAPOR RETARDER

Polyethylene provides the primary vapor retarder layer. However, this low vapor permeance may not be required in many split-insulation assemblies and also limits the amount of drying that can occur to the interior. Vapor retarder paint may also provide an adequate vapor flow control layer. Some rigid insulation products are also relatively vapor-impermeable. If used, care must be taken in the selection of cladding material and detailing to ensure that no significant amounts of water reach the interface between the extruded polystyrene insulation and the vapor-permeable sheathing membrane. This risk may dictate the preferred use of insulation products with high vapor permeability and low water retention, such as mineral wool.

APPLICATION AND CODE COMPLIANCE

This assembly has not been commonly used on multiunit residential buildings. However, with the increase in energy performance requirements for the building enclosure, this assembly is likely to grow in popularity. The use of a cladding that forms a very good water-shedding surface makes this assembly more appropriate for higher-exposure conditions. This assembly may be compliant with OEESC Chapter 4 requirements. This assembly is NOT compliant with Chapter 5 continuous insulation (ci) requirements.

FACTORS LIMITING PERFORMANCE

The placement of the exterior insulation and strapping requires care, since it must not restrict drainage paths at window jambs. Excessive use of adhered waterproof sheathing membranes at interfaces restricts drying to the exterior and should be avoided. Detailing is important in order to restrict the amount of water that penetrates past the water-shedding surface and to allow ventilation to occur. See discussion above for vapor retarder also.

W-4: Type 4 Wall Assembly – Exterior Air Barrier, Split Insulation

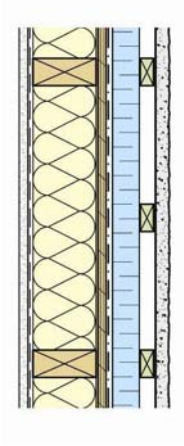

Plan View

EXTERIOR

- Cladding
- Air Space with PT Wood Strapping
- Rigid Continuous Insulation (ci)
- Vapor-Permeable Sheathing Membrane (WRB)
- Sheathing
- Existing Wood Framing with Existing or New Batt Insulation
- Polyethylene Film (or Kraft Facer on Batt)
- Gypsum Board

INTERIOR

CRITICAL BARRIER FUNCTIONS

This assembly performs its critical barrier functions in the same way as W-3. However, it differs in its application of furring outboard of continuous insulation (ci). This application should be carefully examined to ensure that the insulation board and associated furring fasteners have sufficient rigidity and strength to support the cladding system. Alternatively, intermittent clips or blocks can be placed in the insulation plane to provide direct structural connection to the structural members. Taken in sections through these intermittent blocks, the assembly would look similar to W-3.

Due to the insulations requirement to carry structural loading, the insulation is most often rigid, rather than semi-rigid as described in W-3. Materials that are currently available, such as polystyrene board, are often less vapor permeable than semi-rigid insulation, and may therefore provide an unintentional vapor retarding function directly outboard of the weather barrier. This consultant should review the potential effects of this moisture source on the weather barrier as part of their design consideration.

APPLICATION AND CODE COMPLIANCE

This assembly has not been commonly used on multiunit residential buildings. However, with the increase in energy performance requirements for the building enclosure, this assembly is likely to grow in popularity. The use of a cladding that forms a very good water-shedding surface makes this assembly more appropriate for higher-exposure conditions. This assembly may be compliant with OEESC Chapter 4 and Chapter 5 continuous insulation (ci) requirements.

FACTORS LIMITING PERFORMANCE

Placement of the exterior insulation and strapping requires care, since it must not restrict drainage paths at window jambs. Excessive use of adhered waterproof sheathing membranes at interfaces restricts drying to the exterior and should be avoided. Detailing is important in order to restrict the amount of water that penetrates past the water-shedding surface and to allow ventilation to occur. Also see discussion above for vapor retarder.

3.10 Below-Grade Wall Assemblies

Below-grade wall leakage, or damp basements, is one of the more commonly problematic and frustrating moisture management situations of existing building rehabilitation. This frustration stems from the limited ability to address the direct source of the moisture, which is typically buried below the slab or concealed behind many feet of backfilled grade on vertical walls. This guide presents some remedial design considerations where access to the exterior of below-grade walls is not available. In cases where excavation is considered, the consultant may wish to review the corollary to this guide that considers new construction practices.

The consultant should consider the source of moisture based on the findings of the condition assessment. Where the moisture sources come from the surface, many below-grade leakage issues may be resolved by site drainage remediation, similar to the discussion of crawl space moisture. Where moisture is due to hydrostatic conditions, other solutions will be necessary.

Unoccupied/Unfinished: If the space is unoccupied (used only for parking), leaving the concrete walls exposed to the interior, then the moisture control strategy can be fairly simple. Negative-side solutions such as slurry coat or epoxy crack injection may reduce leakage to acceptable levels. The addition of French drains and sumps may also be considered where leakage is excessive.

Occupied/Finished: If the space is occupied (this includes walls that are only partially below-grade and walls that have interior finishes), more creative solutions are necessary and will likely include insulation strategies as well as water management strategies.

3.10.1 Moisture Management

In most rehabilitation projects, exterior waterproofing repairs are not practical, and the result is a need for interior strategies to moisture management. There are, at first thought, two basic strategies to managing water in basements: prevent the water from entering or manage the water that comes in. However, the most effective solutions consider a combination of both approaches, since often neither approach is fully effective on its own.

Limiting Water Penetration

Deflection of water away from the troubled area is often the best starting point for water management. This is most typically accomplished through exterior grading along foundation perimeters or through the addition of perforated pipe systems to direct rainwater away from the foundation wall. Where the water source is from elevated water tables, however, this approach has little effect.

For concrete foundation walls and slabs on grade, chemical grout crack injection is a common and relatively effective practice to fill voids that allow water leakage. Grouts are most often epoxy- or urethane-based and may be hydrophobic or hydrophilic. Each material has its own advantages and disadvantages, and each project may require a different material, depending on the specifics of the cracks. The most common considerations for material selection include:

- Crack width
- Active vs. nonactive leak
- Moving vs. nonmoving crack
- Structural vs. nonstructural crack concern

Although other interior slurry or cover-patch materials are available to limit water infiltration, most have proven to provide only limited or short-duration resolution, as water inevitably finds its way around the patch.

Water Management

When water infiltration is unpreventable, collection and drainage systems are required. For foundation wall leakage or for leakage through cold joints at the footing perimeter ("rising damp"), French drains cut into the slab are common and relatively effective solutions. These often consist of a 6-inch-wide trench cut in the slab at the interior perimeter of the wall, which is often sloped and then filled with gravel. At the low point, a

larger sump hole collects water and a pump moves it to the exterior.

Where significant uptake of water through the slab exists, remediation may require a network of drain channels to collect and distribute the water. Where drain channels are not practical, or when interior dry flooring is desired, a drainage medium and topping slab can provide separation between wet and dry spaces. Assembly Fact Sheets BG-1 and BG-2 provide an overview of a combination of the above solutions to form a dry basement.

3.10.2 Thermal Management

Insulating occupied and finished below-grade areas requires an understanding of the wetting and drying balance as well as the expected moisture sources and intended space use.

Below-grade spaces can be insulated either on the exterior, interior, middle, or both sides of the foundation walls and slabs. When rehabilitating existing construction, the practical limitations typically result in interior insulation strategies. The consultant should review the corollary guide on new construction practices for other solutions.

Interior insulation will have the affect of cooling the foundation structure, since it will no longer benefit from interior heat. There are two primary concerns when insulating foundation walls to the interior:

- Maintaining the ability for the wall to dry to the interior
- Limiting the potential for interior warm air to condense on the cold interior foundation surfaces

To maintain the wall's ability to dry to the interior, use semipermeable to permeable insulation materials. However, to limit the condensation potential, interior air must be prevented from reaching the cold surfaces.

Semipermeable rigid board insulations, such as extruded polystyrene in limited thickness, or semipermeable spray foam insulations are best suited to accomplish both of these objectives. If additional insulation is required beyond the board or foam, batt insulation can be added inboard of the foams.

Care is required at top and bottom edge terminations to ensure air tightness. Chapter 4 provides some of these details. Assembly sheets BG-1 and BG-2 provide an overview of the assembly.

BG-1: Foundation Wall Assembly

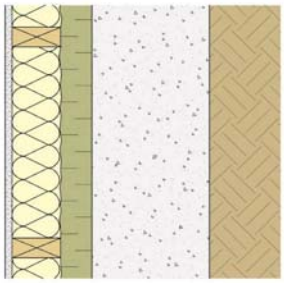

Plan View

EXTERIOR

- Existing Backfill
- Existing Foundation Wall (Crack Injection as Needed)
- Spray Polyurethane Semipermeable Foam
- Wood Studs
- Batt Insulation Between Studs (Optional)
- Gypsum Board

INTERIOR

DISCUSSION

This assembly manages moisture and temperature gradient through the combined use of chemical grout crack injection in the existing foundation wall and (although not shown here) inclusion of base-of-wall French drain water collection and sump system (see details in Chapter 5 at wall-slab interface).

The use of interior spray foam insulation prevents interior air from reaching the cold foundation wall surface and thereby limits the likelihood of condensation. As well, use of semipermeable foam allows some drying to the interior. Although not intended as a primary function, the spray foam also serves to limit the amount of water that can reach interior materials, as the foam provides a reasonable barrier to liquid water movement. The addition of optional batt insulation between studs of the furred wall provides extra thermal resistance, while not appreciably limiting the vapor permeability of the assembly. Due to the use of foam insulation, this assembly would typically require a fire or ignition barrier in the form of interior gypsum. The consultant should check local code for specific requirements.

BG-2: Floor Slab Assembly

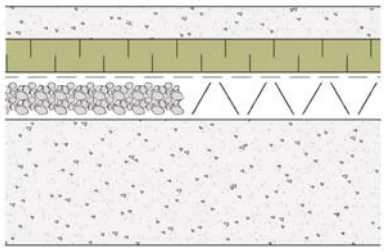

Plan View

INTERIOR

- Interior Floor Finish (Not Shown)
- Concrete Wearing Slab
- Rigid Board XPS Insulation (Optional)
- Vapor Retarder
- Drainage Medium (Rock or Mat)
- Existing Floor Slab

EXTERIOR

DISCUSSION

This assembly anticipates some water infiltration through the floor assembly and utilizes a drainage medium to collect this water. This medium should be connected to a perimeter collection and evacuation system. The drainage medium may be rock-based or manufactured mat. A vapor retarder should be installed over the drainage medium to limit moisture vapor diffusion upward into the space. This vapor retarder may be eliminated as a separate material if vapor-impermeable drainage medium board is used.

Rigid board extruded polystyrene (XPS) insulation may be installed over the vapor retarder if insulation is required on the floor slab. A concrete wearing slab is then cast on top to receive interior finish flooring. In some occasions, paver systems may be viable in lieu of cast-in-place wearing slabs.

In areas that require gas barrier rehabilitation, similar assemblies can be used that include vertical ventilation gas evacuation tied to the drainage medium. The consultant must take care in this case to clearly design where makeup air is supplied to the assembly.

3.11 Other Assemblies

Nonwall assemblies must be considered carefully in rehabilitation projects but, compared to walls, are not as often altered from the original design intent. This section focuses on the specific issues that should be considered with roof, window, deck, and balcony assemblies. Where full-scale redesign of these assemblies is considered, the consultant should review the corollary guide, which presents assembly sheets for these other assemblies, similar to those presented above for walls.

3.11.1 Window and Door Assemblies

Windows and doors have historically been, and continue to be, significant contributors to building enclosure performance problems. Anecdotal evidence suggests that about 25% of water intrusion problems of this construction type are attributable to windows. As well, a significant percentage of manufactured windows can be expected to leak through frame or glazing failures within the first 10 years of their service life. The overall building envelope rehabilitation strategy must be sufficient to ensure that problems that have historically been experienced with windows are reduced to manageable and sustainable levels.

When planning remedial work, windows can be considered in two ways; refurbish existing windows to provide acceptable performance or replace the existing windows with new windows that can provide acceptable and even superior performance to the existing windows. The easy recommendation is replacement because the windows do not meet current water-penetration or thermal-performance standards. However, an advance understanding of windows is required in order to make a rational choice in a cost-effective context, considering multiple performance issues and costs over the long-term operation of the building.

Particularly on larger buildings, the high cost of window repair/replacement can easily justify a detailed study of the window rehabilitation strategy.

When undertaking enclosure rehabilitation, the consultant should consider the following items related to windows:

- What performance level do the current windows meet? Do they perform under historic in-service wind and rain events?
- Do the existing systems provide the required or designed energy features?
- If windows will not be replaced, to what extent must they be rehabilitated in order to achieve the required performance?
- Would added flashings, either at the sill or head, restrict the operations of movable sashes?
- Do existing features or rehabilitation plans provide overhang protection to reduce exposure?
- What is the expected remaining useful life of the existing system? Even if the windows are not currently problematic, does the limited remaining service life justify the cost of replacement now, given the opportunity cost?
- If windows and doors are not replaced, does the rehabilitation design facilitate later replacement without extensive damage to adjacent materials?

3.11.2 Decks & Balconies

Deck and balcony assemblies often present some of the most difficult challenges to building design and especially to rehabilitation design. They are consistently among the most commonly problematic areas with regards to water ingress. To distinguish between the two terms, we refer here to a deck as an occupiable roof space over an occupied interior space. A balcony is an exterior elevated space over exterior space below.

Decks over living spaces are often incorporated into the design of wood-framed residential buildings. The interfaces of decks and walls are often extremely difficult to detail effectively, especially when cantilevered structural members penetrate the building enclosure. The consultant should consider the following when rehabilitating buildings with decks:

- A primary function of a deck is to serve as a roof for the space below. However, decks are more difficult

to waterproof because the membrane must serve also as a walking and wearing surface.

- Unless decks are constructed with insulation over the membrane, the space below the membrane must be vented in most cases. If the space below is vented, the vents must be uniformly distributed around the deck to allow cross ventilation. These vents can be difficult to detail while maintaining water tightness.
- The air barrier in the wall assembly must tie in to the air barrier in the deck assembly.
- Scupper drains are a major source of water leakage. If possible, rehabilitation should consider replacing scuppers with internal, floor-level, clamped membrane style drains. Where scuppers must be used, they should be fully enclosed and have fully welded flanges.
- Depending on the extent of the rehabilitation and the information above, inverted deck assemblies (insulation placed outside of the membrane) should be considered. Inverted assemblies have the following advantages:
    - Venting the space below the membrane is not necessary if adequate insulation exists above the membrane.
    - The membrane is protected from pedestrian traffic (this protection can also be achieved with a paver system that allows insulation to be maintained below the membrane).
    - The air barrier is clearly defined at the membrane level and can be easily integrated with the wall air barrier.
- Door threshold height is often the primary hindrance to conversion of a vented deck assembly to an inverted one. Additionally, the added dead load of insulation ballast may require structural modification. For these reasons, conversion to inverted deck assemblies can be cost-prohibitive unless the remediation already includes significant reframing and structural modification.

Balconies suffer from lack of adequate flashing behind ledgers and from ineffective flashings at deck-to-wall interfaces, especially where cantilevered beams penetrate the wall framing. In many cases, balcony ledgers must be temporarily removed from the wall to allow for new membrane flashings to be inserted behind. This can often be accomplished with temporary shoring to move the balcony structure away from the wall by 6 to 12 inches to allow for ledger removal, flashing, and reattachment.

With both balconies and decks, the consultant should consider:

- Existing railing heights and the potential effect of resultant height after rehabilitation.
- Existing railing structural integrity and consideration for meeting requirements of current building codes.
- Deck slope for drainage.
- Balcony soffit ventilation.
- The ability to maintain and renew balcony/deck membranes at adjacent wall details.
- The continuity of the air barrier at wall interface.
- Door threshold height, accessibility, and drainage.
- Additional overhang protection for balcony doors at the top of the building.

3.11.3 Exterior Stairs

Exterior stairs present a uniquely difficult challenge to enclosure detailing, as they combine horizontal and vertical detailing and often include void spaces that are difficult to accommodate. The consultant should first identify if stair landings will be designed as flow-through or waterproof balconies and then accommodate detailing accordingly. In the case of waterproof landings, the transition at the landing edge should be considered in similar fashion to the outside edge of a balcony and should include balcony-to-wall interface details accordingly, as well as edge drip metal flashing. Stringers installed as wall ledgers complicate the flashing detail by the fact that they slope and often allow water to accumulate below standard ledger-style flashings. Drips should extend lower onto stringers than is typical on balcony ledgers. Stair nosings should stop short of the stringer top edge to accommodate the flashing line. In a rehabilitation of existing stairs, this stringer-to-nose relationship is often fixed and must be accommodated. Additionally, steel stair structures with concrete treads make traditional ledger flashings extremely difficult. In these circumstances, the consultant may wish to consider covering the stairs to limit the wetting exposure.

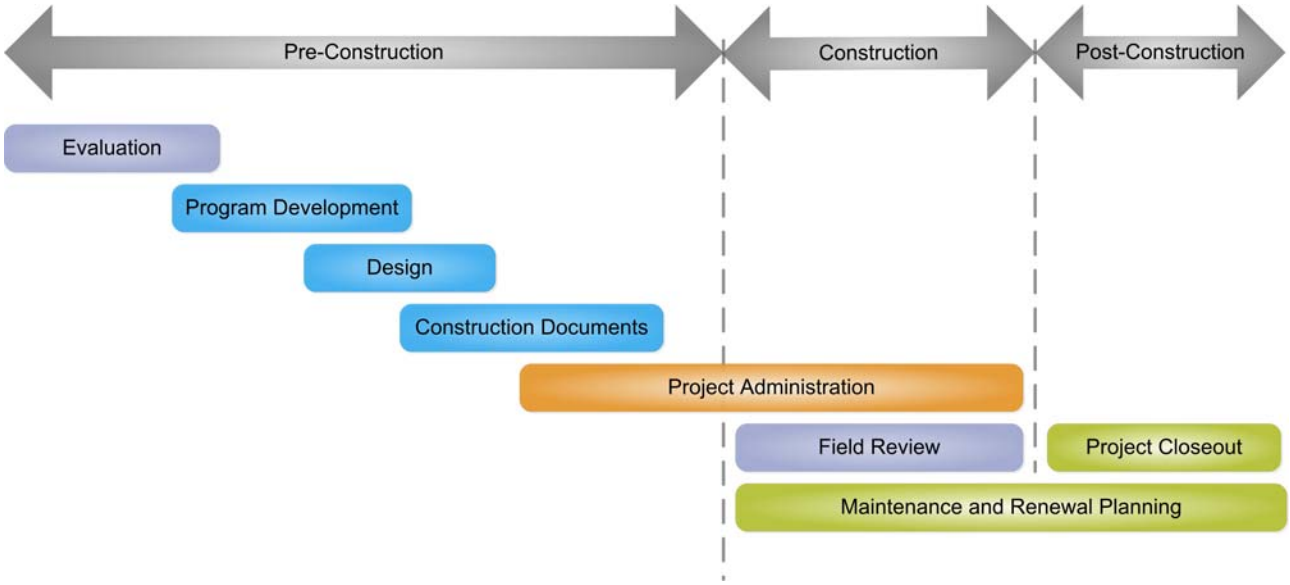

3.12 Rehabilitation Program

As with any new construction project, rehabilitation design starts with a definition of program requirements. This is often a simpler task for rehabilitation than it is for new construction, since many basic parameters are established with respect to the use and occupancy of the building, the site, and the layout of the space. New construction projects typically utilize two design stages for this effort: schematic and design development. The basic schematic design decisions about building orientation, form, and layout are often not applicable to rehabilitation projects since they are preexisting conditions. Essentially, all design work in rehabilitation is of a design development nature. However, many owners often view this stage in too simplistic a manner, often considering it only as 'We want the building to stop leaking!'

The rehabilitation program definition must include consideration of all of the factors previously described in this chapter. Consideration of these factors together may lead to several alternative approaches for the rehabilitation design. Each alternative may have different options for:

- Initial construction cost
- Maintenance and renewals costs
- Aesthetic modifications to the building
- Future performance risk factors

The effective analysis and presentation of these alternatives is fundamental to the owner's ability to make informed choices regarding the rehabilitation of his or her building. The figures at the end of this chapter summarize many of the considerations associated with selection of alternate repair strategies.

3.12.1 Cost Benefit and Risk Assessment

The consultant must ensure that certain minimum levels of performance are achieved in the rehabilitation program. However, the owner must decide between a variety of alternatives that may either be beyond the minimum levels or that present alternate approaches of reaching the performance objectives. The owner must ultimately decide how to balance risk, capital cost, durability, maintenance and renewals expenditures, appearance, cash flow, and many other factors. The consultant must provide advice in all these areas and explicitly identify each issue in presenting information to the owner.

Design of the building envelope for effective performance involves a certain amount of risk management. Risk of performance failure is inherent in all construction activity—particularly in rehabilitation work, where existing buildings may have features that cannot be changed and features that contribute to the risk of building enclosure failures. Consultants should advise owners of these issues and owners should understand the levels of risk associated with alternative design solutions. Greater certainty comes at greater expense, usually in terms of both design and construction costs.

Utilizing quality assurance practices, good design practices, and good construction practices can mitigate risk. Chapter 4 presents an outline for a quality assurance process.

3.12.2 Phasing the Rehabilitation

There is usually more than one possibility for phasing the rehabilitation program. On the one hand it may be possible to phase work starting with the most damaged areas or those with the highest risk of future damage. This scenario has the advantage of spreading the cash flow requirements over several years. Alternately, owners may decide to undertake the work as one continuous project. This scenario has the advantage of getting the work over with quickly and thus minimizing the duration of disruption to the occupants, as well as the lowest construction costs due to the optimization of start-up costs. It also provides the quickest opportunity for the building to lose the stigma attached to being a leaky building.

In some situations it may be possible to phase work over longer periods of time. An example would be a building where one building face is located in high-exposure conditions and has suffered extensive damage due to moisture ingress while other elevations are located in lower-exposure conditions and have not deteriorated, although the same assemblies and details are used on all elevations. The rate of deterioration of the lower-exposure elevations may not dictate a need for an extensive rehabilitation project for some number of years. If rehabilitation work is delayed in certain areas, those areas should be consistently monitored to review their ongoing performance. A life cycle cost analysis of these deferred work alternatives should consider the fact that not only are costs deferred but owners are receiving the benefit of useful service provided by the enclosure assemblies over the deferred time.

The owner must decide how to phase the rehabilitation work, but his or her decision must be made on the basis of advice from the consultant regarding the implications of the various scenarios. The following sections present some of the primary decision factors.

Construction Costs

Phased repair efforts are generally more costly on a per square foot basis because of the additional start-up costs of the separated projects and the diminished ability for the contractor to benefit from repetitive efficiency. In addition, there is a learning curve cost associated with each phase that will result in more capital. The consultant should assist the owner in quantifying these costs.

Risk of Further Damage

Phased rehabilitation means that unrepaired areas of the building will continue to deteriorate. The consultant should assess and quantify the probable impact of this deterioration on costs for the owners. The ability to make this evaluation is directly linked to the quality of the condition assessment work. It may also be necessary to monitor the rate of deterioration over time to enable an informed decision with respect to implementation schedule.

Disruption to Occupants

Different phasing scenarios will involve lesser or greater extent or duration of disruption to the occupants. Although there may not be hard costs associated with this disruption, the consultant should outline probable impacts of various rehabilitation scenarios on occupants.

These impacts include noise, access, loss of use (balconies in particular), dust, and potential increase in airborne irritants.

Cash Flow

Each phasing scenario will dictate a different cash flow plan. The consultant should help the owner develop a realistic cash flow plan based on anticipated construction and other project expenditures such as consulting fees and permitting fees.

Property Value

Property value may be affected differently by each rehabilitation option. However, assessment of the impact of various implementation rehabilitation scenarios on property values is not within the expertise of consultants and should not be attempted. Consultants may provide information regarding the value of rehabilitation work and phasing of the work to the owner, who may then ask others to assess the impact on property value.

Deliverables

During the design stage, the consultant must develop and prepare documents that fully describe the extent of rehabilitation, assemblies to be used in rehabilitation, and changes to building form and appearance. Essentially these documents are used for program review purposes by the owner and to establish the basis for preparing working drawings and specifications for the construction documents stage. The owner may also be required to apply to the municipality for a development permit or revision to an existing permit.

The deliverables vary for this stage, depending on the project specifics. Preliminary drawings, details, reports, and graphical presentations may all be required to some degree. The consultant may also develop a design brief to outline the rehabilitation process and to record decisions made by the owner.

Cost Analysis of Alternatives

One of the owner's primary considerations in evaluating alternatives will be cost. The consultant should therefore undertake a cost comparison of the reasonable alternatives and present this information to the owners.

The rehabilitation cost estimates that form part of the design stage will be based on more detailed development of the proposed assemblies, more accurate area take-offs, and much more thought given to phasing of the work and construction implementation than had occurred in the evaluation stage. These construction cost estimates should be prepared by qualified agencies, often times contractors or construction manager entities. These budget estimates can usually be considered to be accurate to ± 25%.

The estimates can be used for overall project planning purposes, obtaining approval for special assessment (project estimate + 25% owner contingency), and for outside financing options.

Consultants should evaluate the following:

- Initial Construction Costs
- Maintenance Costs
- Renewal Costs

It is standard practice in the industry to consider these costs over some long-term period. Long-term planning for enclosure rehabilitation should be considered at least as long as the life expectancy of the cladding and less than the life expectancy of the structure; therefore 30 to 50 years is appropriate. Oregon Housing and Community Services (OHCS) mandates a 30-year planning horizon.

The rate of deterioration should be factored in to the anticipated rehabilitation costs for all alternatives which involve deferring work. This rate of deterioration will vary and needs to be assessed on a building-by-building basis.

In many cases the "do nothing" alternative is not a viable one. However, analysis of this option may be valuable to the owner in the context of describing the consequences of doing nothing and in making the case for the more realistic alternatives.

The figures that follow present 3 case studies for buildings that require rehabilitation. The 3 examples illustrate cases where a maintenance approach, targeted repair approach, or full scope approach each respectively appear as the clear alternative. Although not presented here, it may also be common where one approach does not present itself as a clear solution. In these cases, the owner will need to weigh other factors, including cash flow and risk tolerance.

Example 1: Cost Analysis of Alternatives - Minimal Damage

Building Description and Current Condition:

Two story wood frame, 125 residential units, vinyl siding with painted wood trim, and cementitious panels. The cladding and window details do not have dimensioned sealant joints that accomodate movement. The complex is 8 years old with clusters of units in townhouse buildings configuration. Medium exposure conditions for all walls, roofs overhang walls in varying configuraitons. Units have crawlspaces and attics. All units have ground floor patios or elevated wood frame and floor balconies. All balconies or patios are accessed from the units via a swing door. The windows are vinyl concealed barrier type frames.

Decision Factors: Damage to wood sheathing and framing is limited and isolated at areas associated with base of wall details, wood trim and window interface details. Damage at south and east faces of the building is greater than at north and west elevations, indicative of the reduced exposure to wind driven rain. The incidence of problematic details is consistent on all building elevations. Roof overhangs provide protection to most walls and less exposure to weather. Walls and details are accessible for maintenance (2 story high). Problematic details are maintainable without continued or severe deterioration. Enclosure cladding materials and components are somewhat durable with 30 years of service life remaining.

	REHABILITATION PLAN			RENEWALS PLAN			MAINTENANCE PLAN					
	Description	Year	Capital Costs	Description	No. of occurrences in 30 years	Capital Costs	Description	Frequency (Times per year)	Cost per Occurrence	Total 30 Year Cost	Risks	Other Considerations
1	**Comprehensive Maintenance Program**											
	Clean, and repaint all trim and siding surfaces. Restain balconies. Re-caulk.	2010	$150,000	Clean, and repaint all trim and panel siding surfaces.	6	$110,000	Inspect and adjust windows	0.5	$2,500		-Some risk that damage will proceed undetected in some areas. -Some risk that mold will impact on IAQ in some units. -Shorter service life may result and there will eventually be a need to replace materials in some areas regardless of high maintenance and renewals	-Property values could be affected over the long term due inconclusive nature of strategy adopted. - Possibly ongoing water damage and repairs required. -Possible ongoing disruption and discomfort to residents
	Replace damaged trim at windows, base of wall and other locations. Repair decayed wood at balconies	2010	$75,000	Investigation to confirm performance every 3 years	10	$10,000	Clean roofs and gutters, inspect and caulk gutter joints	1	$3,000			
	Provide isolated corrections to water repellant and air barriers at locations of know leakage at windows and doors	2010	$50,000	Contingency for wood trim and substrate repairs every 5 years	6	$30,000	Inspect and repair sealant @ trim and windows, adjust vinyl siding, and replace decayed trim	0.5	$8,000			
		Total	**$275,000**		**30 yr. Total**	**$940,000**		**30 yr. Total**	**$247,500**	**$1,462,500**		
2	**Targeted Repair Program**										-Reduced risk of moisture related problems	-High initial capital cost. -Reduced maintenance requirements. - Assembly performance lowers maintenance sensitivity.
	Remove all wood trim, repair substrate, replace with durable material, provide dimensioned sealant joints	2010	$1,030,000	Clean, and repaint all trim and panel siding surfaces eight year cycle.	3	$110,000	Inspect and adjust windows	0.5	$2,500			
	Remove and reinstall windows with proper wrap and interface details	2010	$430,000	Replace sealant every 10 years	3	$62,500	Inspect and repair sealant @ trim and windows, adjust vinyl siding.	0.33	$5,000			
	Modify base of wall trim and provide improved water resistive and air barrier transitions	2010	$62,000	Investigate to confirm performance every 5 years	6	$5,000	Clean roofs and gutters, inspect and caulk gutter joints	2	$3,000			
							Inspect a sample of crawlspaces and attica	1	$1,500			
		Total	**$1,522,000**		**30 yr. Total**	**$547,500**		**30 yr. Total**	**$312,000**	**$2,381,500**		
3	**Full Building Enclosure Rehabilitaiton**										-Minimal risk of moisture related problems -Overall energy performance improvement	-High initial capital cost. Minimal maintenance requirements. -Assembly performance lowers maintenance sensitivity. -Building appearance will change and approval required from municipality. New assemblies will have extended service life expectancies
	Exterior Walls: rehab - new durable siding and trim, performing sealant joints, Water resistant and air barrier improvments	2010	$3,800,000	Clean, and repaint all trim and panel siding surfaces.	3	$110,000	Inspect and adjust windows	0.5	$1,000			
	Replace windows	2010	$430,000	Replace sealant every 10 years	3	$62,500	Inspect and repair sealant @ trim and windows, adjust vinyl siding.	0.2	$2,500			
				Investigate to confirm performance every 5 years	6	$5,000	Clean roofs and gutters, inspect and caulk gutter joints	2	$2,500			
		Total	**$4,230,000**		**30 yr. Total**	**$547,500**		**30 yr. Total**	**$180,000**	**$4,957,500**		

Figure 3-4 Cost Analysis Example #1

Example 2: Cost Analysis of Alternatives - Moderate Damage

Building Description and Current Condition:

Five year old, three story wood frame building with 43 residential units. The building is placed over a slab on grade. The cladding system is a concealed barrier cementitious lap siding. The windows are thermally broken, concealed barrier, aluminum framed. The cladding and window transitions have dimensioned sealant joints that accommodate movement with adequate sill pan and flashing details. The roof is a conventional, flat built up roofing system. The walls have high exposure conditions with no overhangs. All balconies or patios are accessed from the units via an exposed swing door. The balcony transition details with the exterior walls are poorly detailed and allow water penetration. The balcony and deck membranes are poorly applied and are failing.

Decision Factors: Damage to wood sheathing and framing is occurring at balcony edge to wall transitions and balcony floor framing. Water leakage occurs at the upper, exposed balcony swing doors causing damage in the units below. The locations and extent of damage is localized at wall areas around balconies and at balcony floor framing. The cementitious siding system appears to be performing adequately. Walls and details are accessible for maintenance (3 story high). Problematic details not maintainable and will continue to allow water entry, decay and damaged even with localized repairs and accelerated maintenance. Enclosure cladding materials and components are durable and early in the service life expectancy.

REHABILITATION PLAN			RENEWALS PLAN			MAINTENANCE PLAN					
Description	Year	Capital Costs	Description	No. of occurrences in 30 years	Capital Costs	Description	Frequency (Times per year)	Cost per Occurrence	Total 30 Year Cost	Risks	Other Considerations
1 Emergency Repairs and Comprehensive Maintenance Program											
Review all balcony / wall transitions, penetrations and interfaces: recaulk.	2010	$35,000	Clean and repaint all cladding and trim. Replace damaged trim. (8 yr cycle)	3	$70,000	Inspect and adjust windows, seal butt and miter joints	0.5	$5,000		-High risk that damage will continue at detected and undetected areas. - High risk that mold will impact on IAQ in some units. -Shorter service life may result and there will eventually be a need to replace materials in some areas regardless of high maintenance and renewals	-Property values could be affected over the long term due inconclusive nature of strategy adopted. - Ongoing water damage and repairs to structure, interior finishes and contents required. - Continued and ongoing disruption and discomfort to residents
Replace trim at balcony fascia at locations of damage	2010	$25,000	Investigation to confirm performance every 3 years	10	$10,000	Clean roofs and roof drains. Maintain membrane, sealant and flashing	2	$2,000			
Correct balcony membrane at isolated locations of damage and leakage, including framing, exterior wall transitions and door thresholds.	2010	$50,000	Replace balcony membrane system (8 year cycle)	3	$18,000	Repair isolated balcony membrane damage, temporary repairs to correct leakage and damage at interior spaces	1	$5,000			
			Replace exterior sealant every 6 years	5	$13,000	Inspect and repair exterior sealant @ trim and cladding, penetrations.	1	$5,000			
						Contingency for ongoing balcony repairs, interior damage due to leakage.	1	$8,000			
	Total	**$110,000**		**30 yr. Total**	**$429,000**		**30 yr. Total**	**$735,000**	**$1,274,000**		
2 Targeted Repair Program - Balconies										-Reduced risk of moisture related problems with a minor potential for ongoing leakage or damage	-Higher initial capital cost. -Reduced maintenance requirements. -Assembly performance lowers maintenance sensitivity. -Remaining assets will achieve intended service life predictions
Replace balcony fascia trim with improved interface details at wall transitions	2010	$70,000	Clean and repaint all cladding and trim. (8 yr. cycle)	3	$55,000	Inspect and adjust windows, seal butt and miter joints	0.5	$5,000			
Remove and replace balcony membrane with more durable product	2010	$18,000	Replace balcony membrane (10 to 12 year cycle)	3	$18,000	Clean roofs and roof drains. Maintain membrane, sealant and flashing	2	$2,000			
Provide corrections to balcony structure and wall transitions, including improved interface details	2010	$75,000	Replace exterior sealant every 10 years	3	$13,000	Repair isolated balcony membrane damage.	1	$2,000			
Install canopies above upper balcony swing doors	2010	$40,000	Investigate to confirm performance every 5 years	6	$8,000	Inspect and repair exterior sealant @ trim and cladding, penetrations.	0.5	$3,500			
Review and recaulk all wall transitions and penetrations	2010	$13,000									
	Total	**$216,000**		**30 yr. Total**	**$306,000**		**30 yr. Total**	**$307,500**	**$829,500**		
3 Full Building Enclosure Rehabilitation										-Minimal risk of moisture related problems -Overall energy performance improvement	-High initial capital cost. Minimal maintenance requirements. -Assembly performance lowers maintenance sensitivity. -Building appearance will change with addition of canopies and approval required from municipality. -Service life of cladding and windows will be longer than original assemblies.
Exterior Walls: rehab - new durable siding and trim, performing sealant joints, water resistant & air barrier improvements w. rain screen	2010	$700,000	Clean and repaint all cladding and trim. (8 yr. cycle)	3	$55,000	Inspect and adjust windows and seals	0.33	$3,000			
Replace windows	2010	$86,000	Replace sealant every 10 years	3	$13,000	Clean roofs and roof drains. Maintain membrane, sealant and flashing	2	$2,000			
Completely rehab balconies, fascia, and interfaces, structural repairs	2010	$175,000	Replace balcony membrane (10 to 12 year cycle)	3	$18,000	Repair isolated balcony membrane damage.	1	$2,000			
Install canopies above upper balcony swing doors	2010	$40,000	Investigate to confirm performance every 5 years	6	$8,000	Inspect and repair exterior sealant @ trim and cladding, penetrations.	0.33	$2,500			
	Total	**$1,001,000**		**30 yr. Total**	**$306,000**		**30 yr. Total**	**$234,450**	**$1,541,450**		

Figure 3-5 Cost Analysis Example #2

Example 3: Cost Analysis of Alternatives - Severe Damage

Building Description and Current Condition:

Three storey wood frame building that is 8 years old with 85 units. The cladding is a face seal or barrier stucco clad building, roughly square in plan with large interior courtyard. Units are accessed via exterior walkways which travel around three sides of the courtyard. High exposure conditions for all walls, no overhangs. The unit walkway walls are partially exposed due to window wells that separate units from walkways. Three stair towers and elevator core are enclosed. All units have either balconies or at grade patios. The upper level balconies are uncovered. The balconies or patios are accessed throough a sliding glass door. The windows are non-thermally broken aluminum concealed barrier type frames. The balcony and walkways have an exposed fluid applied membrane.

Decision Factors: Damage to wood sheathing and framing is severe throughout the walkway structure requiring that temporary shoring be put in place. Damage is moderate at balconies, windows and other wall penetrations. Damaged is more substantial at upper level balconies and the east elevation of the building. South, west and north elevations are damaged but less severely indicating there is reduced exposure to wind driven rain. The incidence of problematic details is consistent on all building elevations. Durability of the barrier cladding and window assemblies is poor. Durability of the walkway and balcony membrane systems is poor.

REHABILITATION PLAN			RENEWALS PLAN			MAINTENANCE PLAN					
Description	Year	Capital Costs	Description	No. of occurrences in 30 years	Capital Costs	Description	Frequency (Times per year)	Cost per Occurrence	Total 30 Year Cost	Risks	Other Considerations
1 Comprehensive Maintenance Program with Emergency Repairs										-Significant risk that damage will proceed undetected in some areas with ongoing leakage into occupied spaces. -Significant risk that mould will impact on IAQ in some units. -Significant risk that some or all wall surfaces will eventually need to be replaced in some areas regardless of high maintenance and renewals. -Shorter service life may result and there will eventually be a need to replace materials in some areas regardless of high maintenance and renewals	-Property values could be significantly affected over the long term due inconclusive nature of strategy adopted. -Ongoing water damage and repairs required with continued discomfort to residents and damage to property and contents.
Replace all sealant and recoat with elastomeric	2010	$125,000	Replace sealant and recoat stucco walls every 5 years	6	$150,000	Inspect and adjust windows, provide corrections to miter frame joints and failed sealed units	0.5	$12,000			
Replace or provide sealant in window mitre joints	2010	$25,000	Review and provide corrections to window frame joints with sealant every 3 years	10	$10,000	Inspect and repair sealant at exterior wall surfaces, penetrations and interfaces	1	$8,000			
Investigation to determine structurally unsound areas	2010	$50,000	Investigation to confirm performance every 3 years	10	$10,000	Clean roof and drains, inspect membrane, flashing, and sealant and maintain	2	$2,000			
Provide emergency repairs at walkways, balconies and other areas where structural damage is severe	2010	$500,000	Reapply balcony and walkway membranes every six years	5	$75,000	Inspect balconies and walkways and provide repairs to islolated locations of damage	1	$15,000			
			Contingency for structural repairs every 4 years	7	$50,000	Contingency for ongoing leak resolution and damaged to interior finishes	1	$20,000			
	Total	**$700,000**		**30 yr. Total**	**$1,825,000**		**30 yr. Total**	**$1,590,000**	**$4,115,000**		
2 Targeted or Partial Rehabilitation with Modifications										-Reduced risk of moisture related problems, however continued damage can be expected at wall and window areas not rehabilitated. -Eventual replacement of additional exterior walls areas can be expected within 25 years. The cost for this possibility is not listed here	-High initial capital cost. -Somewhat reduced maintenance requirements but ongoing repairs and diligent inspection and maintenance is still required. -New Assemblies have improved performance and therefore reduced maintenance sensitivity. Building appearance will change and approval required from municipality.
Construct new roof/skylight assembly over window wells to reduce exposure of walkway walls	2010	$200,000	Clean and recoat stucco walls every 7 years	4	$102,000	Inspect and adjust windows, provide corrections to miter frame joints and failed sealed units	0.5	$5,000			
Replace 50% of windows (at locations of highest exposure and in conjunction with wall rehab)	2010	$165,000	Replace sealant every 7 years	4	$42,000	Clean roof and drains, inspect membrane, flashing, and sealant and maintain	2	$2,000			
Provide or replace sealant in window miter joints where originals are maintained	2010	$15,000	Review and provide corrections to window frame joints with sealant every 3 years	10	$5,000	Inspect balconies s and provide repairs to islolated locations of damage	1	$5,000			
Rehabilitate most highly exposed exterior walls at east elevation and other location with substantial decay.	2010	$1,200,000	Investigate to confirm performance every 5 years	6	$10,000	Contingency for ongoing leak resolution and damaged to interior finishes	1	$10,000			
Provide new balcony membranes with improvided details, including structural repairs	2010	$125,000	Recoat balconies and walkways every 8 years	3	$61,000	Inspect and repair sealant at exterior wall surfaces, penetrations and interfaces	1	$5,000			
Reconstruct walkways (including repairs to structure) with new protected membranes system	2010	$300,000									
	Total	**$2,005,000**		**30 yr. Total**	**$869,000**		**30 yr. Total**	**$795,000**	**$3,669,000**		
3 Full Rehabilitation										-Minimal risk of moisture related problems. -New cladding and window system will provide the longest service life expectancies. -New window and wall systems will provide improved thermal performance	-High initial capital cost. -Minimal maintenance requirements. -Assembly performance lowers maintenance sensitivity.
Construct new roof/skylight assembly over window wells to reduce exposure of walkway walls	2010	$200,000	Clean and recoat stucco walls every 12 years	2	$102,000	Inspect and adjust windows	0.2	$2,500			
Replace all windows with thermally broken vinyl or fiberglass windows	2010	$325,000	Replace exterior sealant every 12 years	2	$42,000	Clean roof and drains, inspect membrane, flashing, and sealant and maintain	2	$2,000			
New strapped rainscreen walls all exposed elevations (protected walkway walls excluded)	2010	$1,750,000	Recoat balconies - 12 year cycle	2	$61,000	Inspect balconies and provide repairs to islolated locations of damage	1	$2,500			
Resurface balconies with new more durable membrane system	2010	$75,000	Investigate to confirm performance every 5 years	6	$7,500	Inspect and repair sealant at exterior wall surfaces, penetrations and interfaces	3	$5,000			
Reconstruct walkways (including repairs to structure) with new protected membranes system	2010	$250,000									
	Total	**$2,400,000**		**30 yr. Total**	**$455,000**		**30 yr. Total**	**$660,000**	**$3,515,000**		

Figure 3-6 Cost Analysis Example #3

CHAPTER CONTENTS

4 CONSTRUCTION DOCUMENTS 4-1

4.1 Introduction 4-1
4.2 Code-Related Construction Concerns 4-1
4.3 Repair of Deteriorated Materials.....4-2
4.4 Construction Documents.....4-6
4.5 Construction Documents Stage – Checklist 4-8
4.6 Details.....4-8

TABLE OF TABLES

Table 4-1 Construction Document Summary 4-6
Table 4-2 List of Details.....4-9

THIS PAGE INTENTIONALLY LEFT BLANK

4 CONSTRUCTION DOCUMENTS

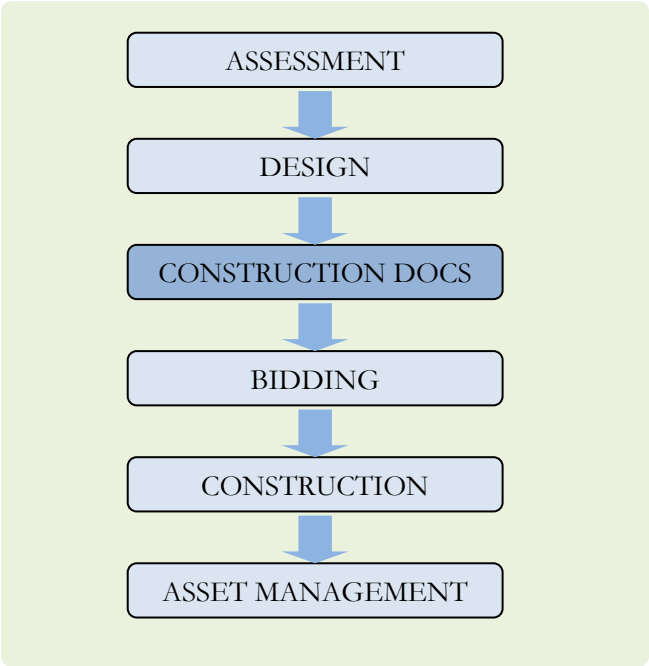

4.1 Introduction

Subsequent to the evaluation of the building enclosure and the preliminary design of the rehabilitation program, the consultant will develop construction documents for bidding, permitting, and eventual construction efforts.

The construction documents are developed based on the owner-approved design development documents and construction cost estimates. The principal consultant responsibilities and activities in this stage are:

- Project coordination.
- Preparation of drawings and specifications to describe the project in detail.
- Review and revision of construction and project budgets.
- Assistance to the owner with obtaining municipal approvals and permits.
- Continued evaluation of applicable statues, codes, bylaws and regulations.
- Development of documentation to serve as the basis for the owner/contractor agreement (see Chapter 5)

All construction work, including remedial work, must comply with the applicable Oregon building code (residential or commercial). When remedial work is being performed on existing buildings, however, there are some areas that require specific attention. A few of the common areas of concern are discussed in the following section.

Subsequent sections of this chapter address the construction documents that must be compiled in order to describe the rehabilitation work. At the end of this chapter is a series of example details for building enclosure repair concepts.

4.2 Code-Related Construction Concerns

4.2.1 Additions of Roofs and Canopies

In order to provide additional weather protection to exposed enclosure systems (see discussion in Chapter 3), the consultant may consider adding roof extensions, canopies, or other overhangs. These sorts of additions must conform to the building code from a fire protection perspective. In the 2010 OSSC (from here on referred to as "OSSC"), Sections 705.2 and 1406 cover these projections. These OSSC requirements are intended to limit fire spread either to adjacent buildings or to wall openings within the same building. Those projections considered to be combustible may also require rated assemblies on the underside of the overhang.

Balcony construction is also discussed from a similar perspective in Section 1406.3 of the OSSC. Consultants should familiarize themselves with these requirements prior to implementation of rehabilitation repairs.

4.2.2 Enclosure of Exterior Spaces

Consultants may consider enclosing exterior spaces, such as balconies or exterior passageways. These spaces can be complex considerations from various aspects of the OSSC, including fire protection and accessible access.

The OSSC does not specifically address balcony enclosure; however, the consultant should fully understand the implications of these measures prior to implementation.

4.2.3 Balcony Reconstruction

Balconies are a common area in need of remediation on wood-framed buildings. In addition to the heat-, air-, and moisture-related matters addressed in previous sections, the consultant must consider peripheral matters, such as guardrails and structural repairs.

Guards

When guardrails are removed, modified, or altered as a function of remediation work, they are likely to require upgrade to current building code standards. When balcony or deck waterproofing systems are altered and new overburden or paver systems are provided, existing guards may not reach adequate height from the new walking surface. Guards are primarily covered in two sections of the OSSC:

- Section 1013 Guards
- Section 1607.7 Loads on handrails, guards, grab bars, seats, and vehicle barrier systems

Section 1013 covers items such as guardrail heights and opening sizes. Section 1607.7 covers the structural loading requirements.

4.2.4 Window Replacement

When windows are removed from the building, it may be necessary to upgrade certain aspects of the assembly to meet the current building code requirements. The consultant should consider the following beyond the building enclosure-related concerns:

- Sill height
- Glazing requirements (safety, tempered, etc.)
- Egress requirements
- Fire code requirements
- Accessibility requirements
- Energy code requirements

There are far too many variables that determine how the above need to be handled to be considered thoroughly in this guide, and they are very dependent upon building size, type, and occupancy. Consultants should familiarize themselves with the building code requirements prior performing window replacements.

4.2.5 Existing Structural Deficiencies

Consultants performing remedial work on an existing building have a responsibility to address framing deficiencies in the original construction that are uncovered during the work. Noncomplying or substandard framing should be repaired in accordance with OSSC Chapter 34. These repairs may not require updating the assemblies to current code requirements but will likely require repair to the requirements in place at the time of construction.

4.3 Repair of Deteriorated Materials

The construction documents should provide guidelines for the contractor to address deteriorated wood, such as sheathing and framing. Ultimately, a structural engineer will be required to assess the need for replacement, but general guidelines can be established to determine when further evaluation is necessary. The following are often used as rules-of-thumb:

- 3/16-inch or less of decay on dimensional lumber is often able to be sanded and treated in place.
- Swollen, soft, delaminated, or significantly stained plywood sheathing should be replaced.
- Swollen or soft OSB should be replaced.

4.3.1 Extent of Wood Removal

Visible evidence of decay is the last stage in the wood decay process. The fungus that caused the decay will have continued to spread along and across the wood member. It is therefore critical to remove not only wood that appears decayed within a member, but a further 24 inches past the visible decay along the length of the member. Using this guideline, if part of a member's

cross section is visibly decayed, the entire cross section should be removed. The cut end of the member, or edges of sheathing, being left in place should be field-treated with a preservative.

Although decay fungus most readily follows the wood grain, it will also spread between adjacent pieces of wood. The "decay plus 24 inch" guideline is not intended to be applied laterally from one piece of wood to the next. Members adjacent to decayed wood should be visually examined and, if no decay or obvious signs of fungal infection are found, left in place and field-treated with a preservative.

For larger structural members, sound portions of partly deteriorated members that have been removed from the building can be salvaged, field-treated with a preservative and reused elsewhere in the building.

After applying these guidelines, some remaining wood will likely still contain decay fungus. The question becomes how active it is. To decrease the likelihood of the decay progressing, all wet framing exposed during the repair program should be allowed to dry to a moisture content of 19% or less before being enclosed. This is consistent with the industry standard of care and building code requirement that the moisture content of lumber be not more than 19% at the time of installation. While drying the wood will stop the decay process, it will not necessarily kill the fungus. It can remain dormant in the dry wood and reactivate if the wood is rewetted.

If there is doubt as to the dryness of the post-repair environment, all wood left in place should be field-treated with a preservative.

The main purpose of field-applied preservatives is to contain fungus and insects within infected wood, preventing their transfer into uninfected wood. They do not render the wood free of infection and they do not restore the structural capacity. They should therefore be used only in conjunction with decay removal and drying of the framing, not as a substitute.

The "decay plus 24 inch" guideline can be extremely onerous when applied to the ends of joists as it may dictate removal past the point of bearing, necessitating complex splicing and removal of interior finishes. Under particularly difficult circumstances, an alternative approach would be to cut out the decayed wood along with adjacent wood that is obviously water-marked and to test the remaining dry, unmarked wood within 24 inches of the decay for strength using a wood density meter or other appropriate technology, accompanied by examination of the remaining cut end for signs of decay. The use of such technology requires a great deal of experience and judgment. The decision not to cut out the full 24-inch distance should only be made by a professional engineer familiar with wood decay or with the guidance of a consultant familiar with wood decay. Liberal application of a preservative and drying of the framing will help to minimize regrowth of any residual fungi.

Wall and floor sheathing should be cut out along the centerline of studs and joists or cut alongside studs and joists if new nailers are installed. Cuts in floor sheathing parallel to the span will require the addition of blocking between joists if the original sheathing had tongue-and-groove edges or was blocked along unsupported edges. Similarly with wall sheathing, unsupported edges should be blocked if they were originally constructed in this way.

Piecemeal wall and floor sheathing patches without adequate blocking and nailing may lower the capacity of the wall or floor as a shear wall or diaphragm.

Indications that an exterior wall is a designated shear wall include heavy nailing of the sheathing, blocking of unsupported sheathing edges, and hold-down anchors at the ends of walls. Such walls require special attention.

It is often more economical to replace partially decayed studs than to splice them, because of the relative amounts of labor and material required. If replacing them, the sound portion of existing studs can be left in place alongside the new studs to minimize the damage to

interior finishes caused by removal. If splicing, the "decay plus 24 inch" guideline will result in sufficient removal of material to install an appropriate splice. Built-up studs should be either spliced or removed and replaced such that they provide support in the same location beneath the point loads. Take care to locate studs such that splices in the top wall plates are adequately supported.

4.3.2 New Sheathing and Framing

All-new wood products should have 19% or lower moisture content at the time the products are closed in. It is therefore important to take caution in protecting wood products from exposure to precipitation and to not store materials in places where they may end up in puddles or runoff areas.

Dimension lumber should be replaced with new dimension lumber having strength properties equal to or better than the removed lumber. The properties that are most critical in the selection depend on the loading of the member involved. For joists, bending strength or stiffness will generally govern the design. For lintels, longitudinal shear strength generally governs, but bending strength and stiffness becomes more important as spans increase. For studs and posts, compression strength parallel to the grain will govern the selection, while for wall plates compression perpendicular to grain will govern. Graded, finger-joined studs are typically considered equivalent in strength to sawn studs of the same grade. All replacement framing materials should be in accordance with OSSC as a minimum requirement.

Pressure preservative-treated lumber has lower-strength properties than those of untreated lumber if it has been incised. Take this into consideration before using it as a replacement.

Replacing dimension lumber with material of the same species and equal or better grade will generally, but not always, be sufficient. Exceptions occur in older buildings because of changes in the specified strengths of dimension lumber (or allowable stresses in working stress design) that have occurred with changes in design standards.

Changes to design strength values of wood species occur over time as a function of new testing, as well as reduced capacity of short-term growth trees. In some cases, the strength of the lumber may not have changed, but the industry's knowledge of the actual strength of the production material has changed. Therefore, in an older building, replacing D.Fir-L joists with D.Fir-L joists may not be equivalent, and upgrading to Hem-Fir may be required.

As a result of changing code values, a structural engineer should be consulted in all but the most straightforward of cases, e.g. replacing dimension lumber in a newer building with material of the same species and equal or better grade.

Replace wall and floor sheathing with new sheathing having strength properties equal to or better than the removed material.

Replace engineered materials such as prefabricated wood I-joists, glued-laminated beams, parallel strand lumber, and laminated veneer lumber with identical materials, unless reviewed by a structural engineer and found to be appropriate.

4.3.3 Studs and Plates

New studs can often be installed adjacent to existing studs (sistered) to limit the amount of damage to interior finishes that may be caused by excessive removal. Deteriorated area removal will often follow the 3/16-inch rule and will typically require preservative treatment.

Deteriorated top and bottom plates that support shear walls, and those that are in direct contact with concrete, will likely require complete replacement. Determination of deterioration in plate members is difficult, since most of the surface area is concealed by adjacent members or concrete foundation walls. Where deterioration is

suspected, subsurface exploration is required or plates should be removed.

4.3.4 Joists and other Structural Members

Joists and other solid-sawn lumber members will often follow the 3/16-inch and "decay plus 24 inch" rules. Preservative treatment is always recommended on any member that shows signs of deterioration.

4.3.5 Engineered Materials

Rules of thumb should not be used with engineered materials, such as manufactured I-joists, Laminated Veneer Lumber (LVL), or Parallel Strand Lumber (PSL). All such engineered materials should be evaluated by a qualified engineer to establish repair protocols.

4.3.6 Preservative Treatments

Replacement lumber and sheathing should be pressure preservative-treated wherever it is inaccessible in the finished construction and outside the moisture barrier. Consultants should refer to the American Wood Protection Association (AWPA) Standard U1-10 as referenced in OSSC Chapter 2304.11 - Protection against decay and termites. In addition to the recommendations provided above, this guide recommends using Kiln-Dried After Treatment (KDAT) products, as well as requiring that all preservative-pretreated products be identified with a mark showing proof of third party assurance inspection. Most wood materials used for weather-exposed, enclosure-related repairs will be within the UC3 Above Ground (Exterior) category of the U1 standard.

Field treatment should be applied to all untreated areas of pressure preservative-treated wood that are exposed from cutting and boring. Copper naphthenate is commonly used product for surface treatment. Borate-based preservatives should not be used in wet service conditions (outside the moisture barrier), as water will leach the borates out of the wood over time.

Consideration should also be given to using preservative-treated sheathing on exterior walls that are deemed to be important, such as shear walls, or if the complete elimination of the presence of moisture that led to the degradation is in doubt. In such cases, replacement sheathing and lumber should be pressure preservative-treated and existing sheathing and lumber that is left in place should be field-treated with a preservative. A borate-based preservative is suitable in this application since improvements to deflection, drainage, and drying capability of the walls should have reduced the moisture load below the threshold for leaching.

Boron rods or paste are another means of field-treating wood members. These soluble rods or paste are inserted into drilled holes in the wood. Borates diffuse into the wood when sufficient moisture is present. Boron rods are best suited for treatment of isolated, larger framing members in damp conditions, but protected from exterior moisture sources (located inside the moisture barrier or in low exposure conditions).

Persons working with preservatives and preservative-treated wood must be familiar with the specific safe handling practices recommended for the product.

4.3.7 Fasteners and Connectors

Shifts in recent years away from arsenic-based wood preservative treatments have had significant effect on the level of corrosion resistance required for fasteners and connections. More environmentally friendly wood preservatives, such as ACQ or the copper azole-based products, are much more corrosive to steel and zinc coatings than their predecessors. As a result, recent codes and standard practices have implemented more stringent requirements . In general, fasteners into preservative-treated wood must be hot-dipped galvanized at a minimum, and connectors should have zinc coatings that match the corrosion resistance of the fasteners. Stainless steel has become much more prevalent as well, due to its resistance to corrosion.

OSSC Chapter 2304.9.5.1 - Fasteners and connectors for preservative-treated wood

"Fasteners in contact with preservative-treated wood shall be of hot-dipped zinc-coated galvanized steel, stainless steel, silicon bronze or copper….

…Connectors that are used in exterior applications and in contact with preservative-treated wood shall have coating types and weights in accordance with the treated wood or connector manufacturer's recommendations. In the absence of manufacturer's recommendations, a minimum of ASTM A 653, type G185 zinc-coated galvanized steel, or equivalent, shall be used."

4.4 Construction Documents

The term "Construction Documents" refers to all of the written and graphic material prepared by the consultant (and subconsultants) to communicate the design and construction of the project. This broad group generally consists of the bid documents and the contract documents. During the bidding process, additional information is often added in the form of addenda. Addenda and later changes during construction also become part of the contact documents. The table below presents the structure of the construction documents and the subsets described above.

Standard construction contracts ascribe an order of precedence to various contract documents in the event of conflicting requirements. Specifications typically govern over schedules and drawings, and schedules govern over drawings. For this reason it is important to clearly distinguish between drawings, schedules, and specifications in order to understand the information provided by each and to avoid repetition. Therefore drawings should not include specification notes, nor should they refer to proprietary products.

Table 4-1 Construction Document Summary

Document	Construction Documents	Bid Documents	Contract Documents
Bid Requirements	✓	✓	
Agreement	✓	✓	✓
General Conditions of the Contract	✓	✓	✓
Procurement and Contracting Requirements (CSI Division 00)	✓	✓	✓
General Requirements (CSI Division 01)	✓	✓	✓
Technical Specifications (CSI Divisions 02 - 49)	✓	✓	✓
Drawings	✓	✓	✓
Addenda	✓	✓	✓
Contract Modifications	✓		✓

4.4.1 Drawings

Drawings provide graphical information and identify the size, location, and arrangement of various building assemblies, components, and materials. Although drawings will be used as part of the building permit submission, their primary function is as contract documents to provide information to enable the contractor to perform the work. Many municipalities issue documents describing the information which is typically to be provided on permit application drawings. Materials and components should be identified with generic terms with detailed information being provided in the complimentary technical specifications.

Drawings should not attempt to define means of construction or assign sub-trade responsibility for portions of the work.

The drawings should document the design decisions made previously. Making fundamental design decisions (as opposed to detailing decisions) during the preparation of the drawings can be inefficient and have an impact on construction costs. However, it may be

necessary to revisit some design decisions made during the design stage due to issues that come to light during the production of the drawings.

Although each project is unique, the basic information provided does not change significantly. The drawings must provide sufficient information to identify and locate all materials, components, and assemblies and to indicate the extent of the work relative to the existing building condition. The following drawings and information should be provided:

General Arrangement Drawings

The drawing set should include a site plan, floor plans, building elevations, and building sections. These drawings indicate the overall scope of the work, identify interfaces between remedial work and existing elements to remain unchanged, identify the locations of assemblies and components, and reference detail drawings.

Detail Drawings

Detail drawings show the detailed location of materials and components and their relationship to adjoining assemblies and materials. Dimensions of all materials, assemblies, and components should be shown. Actual profiles of existing components such as windows should be drawn, rather than relying on generic indications. Existing and new construction should be clearly identified and distinguished.

All drawings should be drawn to scale. The appropriate scale for detail drawings will vary depending on the level of detail to be conveyed. However, critical interfaces such as window perimeter details should be drawn at a scale of 1:2 or 1:1.

All drawings should have a title block providing the following information:

- Project title and address
- Drawing number and revision
- Date of drawing issue and dates of revisions
- Consultant's name and address with space for a seal
- Name of designer, draftsperson, and reviewer

Standard symbols, abbreviations, and drawing conventions should be used on all drawings.

4.4.2 Specification Format

Although many specification sets utilize CSI MasterFormat forms and formats, there are many other options as well, and custom formats could be used with similar effectiveness. Ultimately, each specification section should be divided into General, Products, and Execution parts. This is often referred to as a 3-part specification format. The following sections utilize the CSI MasterFormat system for simplicity.

4.4.3 Procurement Requirements

The bid documents will often follow the similar format of the general requirements and technical specifications. Regardless of format, however, these documents will include the following:

- Table of Contents
- Invitation to Bid
- Instruction to Bidders
- List of Drawings
- Contractor Bid Form
- Bidder Checklist
- Owner/Contractor Agreement
- General Conditions of the Contract

4.4.4 General Requirements

Although a simplification, the general requirements provide the organizational structure for the specifications and deal primarily with 3 broad areas:

- Administrative requirements
- Procedural requirements
- Temporary construction facilities

The sections listed below represent the high-level sections that should be included within the Division 01 General Requirements for rehabilitation projects. Each

of these may be further divided into lower-level sections when more specific information is required.

- 00 10 00 Summary (Summary of Work)
- 01 20 00 Price and Payment Procedures
- 01 30 00 Administrative Requirements
- 01 40 00 Quality Requirements
- 01 50 00 Temporary Facilitates and Controls
- 01 60 00 Product Requirements
- 01 70 00 Execution and Closeout Requirements
- 01 80 00 Performance Requirements

00 10 00 Summary of Work

Although often not utilized for larger new construction projects, the summary of work section is quite valuable for smaller projects like building enclosure repair, since most sub-trade contractors will be overlapping and will need significant coordination. This section provides an opportunity to summarize this interaction between all sub-trades in a clear and concise description of the overall work to be performed on the project. It is not uncommon for consultants to remove the summaries of work from the individual technical sections and consolidate all summary of work language in this section.

4.4.5 Technical Specifications

Technical specifications compliment the drawings and provide detailed information on the performance and quality requirements of materials and components, compliance with standards, workmanship, and approved suppliers of particular materials and components.

The technical portion of the specification package needs to be developed for each unique project; however, there are commercially available Master Specification packages that provide good starting points for the development of specifications. For a typical wood-framed, multiunit residential building enclosure project, the following technical sections are common. This is not a complete list, nor do all projects require all of these sections.

- 02 41 00 Demolition
- 02 80 00 Facility Remediation (may also use subcategories specific to mold, asbestos, or lead)
- 04 21 00 Clay Unit Masonry (brick)
- 04 42 00 Exterior Stone Cladding
- 06 10 00 Rough Carpentry
- 06 20 00 Finish Carpentry
- 07 13 00 Sheet Waterproofing
- 07 14 00 Fluid-Applied Waterproofing
- 07 18 00 Traffic Coatings
- 07 21 00 Thermal Insulation
- 07 25 00 Weather Barriers
- 07 26 00 Vapor Retarders
- 07 27 00 Air Barriers
- 07 30 xx Roofing (e.g., steep, low-slope, etc.)
- 07 46 00 Siding
- 07 5x xx Membrane Roofing
- 07 62 00 Sheet Metal Flashing
- 07 65 00 Flexible Flashing
- 07 92 00 Joint Sealers
- 08 10 00 Doors
- 08 50 00 Windows
- 08 80 00 Glazing
- 09 90 00 Painting and Coating

4.5 Construction Documents Stage – Checklist

- Review project and construction cost estimates with owners.
- Prepare construction documents (drawings and specifications) to illustrate the nature of the scope of work.
- Review municipal permit process with owners.
- Assist owners with obtaining permits.
- Advise on bidding documents and obtain instructions. (Consultant may be tasked with production of full contract, bid, and construction documents.)
- Continue to review applicable codes, bylaws, and regulations.

4.6 Details

The sheets that follow present typical details for rehabilitation of the exterior building enclosure. Details included are generic and conceptual, as project conditions will vary significantly. Dimensions are typically not shown. The intent of this guide is to present design concepts, rather than finished details. It is up to the consultant to verify that particular details comply with jurisdictional requirements, project performance requirements, and owner requirements.

The details are labeled following the labels established in the wall assembly sheets of Chapter 3. For each condition, details may be presented for a variety of assembly types and are labeled with the assembly type letter designation located within a square box.

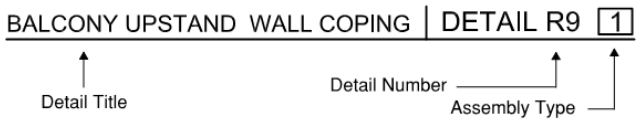

Table 4-2 List of Details

Detail	Title	Example Location Cited in:
R9	Balcony Upstand Wall Coping	Figure 2-10
R11	Roof-to-Wall Kick-out Flashing	Figure 2-9
R12	Roof-to-Wall Sequence	Figure 2-9
R15	Chimney at Roof	Figure 2-9
W5	Dryer Vent Flashing	Figure 2-9
W7.1	Typical Electrical Box Flashing	Figure 2-9
W7.2	Typical Penetration Flashing	Figure 2-9
W9	Guardrail Attachment	Figure 2-9
W10.1A&B	Partition Wall Sequence	Figure 2-10
W10.1C	Partition Wall Saddle Flashing	Figure 2-10
W14	Balcony/Deck Scupper	Figure 2-10
W15	Belly Band Trim	Figure 2-9
W16	Cladding Transition	Figure 2-9
W38	Cross-Cavity Flashing	Figure 2-10
WD1.1	Window Head – In Situ	Figure 2-12
WD1.2	Window Head – Replacement	Figure 2-12
WD1.3	Head and Jamb Trim Interface	Figure 2-12
WD1.4	Window Sequence Isometrics	Figure 2-12
WD2.1	Window Sill – In Situ	Figure 2-12
WD2.2	Window Sill – Replacement	Figure 2-12
WD4.1	Window Jamb – In Situ	Figure 2-12
WD4.2	Window Jamb – Replacement	Figure 2-12
BD1A&B	Balcony-to-Wall Sequence	Figure 2-11
BD3.1	Balcony-to-Wall – Flow-Through Balcony	Figure 2-11
BD3.2	Balcony Door Sill	Figure 2-11
BD3.3	Stair Stringer/Ledger	Figure 2-11
BD4	Deck-toWall – Waterproof Deck	N/A
BG3.1	Buried Sill Plate – Reframe	Figure 2-11
BG3.2	Buried Sill Plate – Waterproof and Drain	Figure 2-11

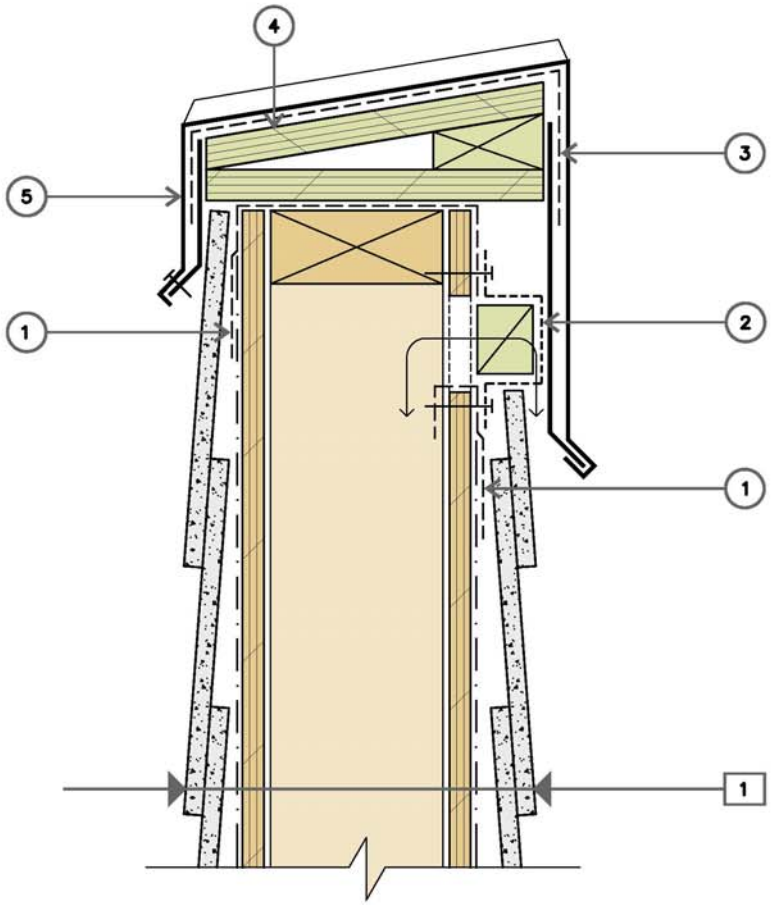

LEGEND

1 Wall Assembly
- Cladding
- Vapor permeable WRB
- Sheathing
- Wood framing
- Sheathing
- Vapor permeable WRB
- Cladding

1. Self-adhered membrane
2. Insect screen on intermittent blocking
3. High-temperature self-adhered membrane
4. Continuous wood blocking (p.t.)
5. Pre-finished metal cap flashing

BALCONY UPSTAND WALL COPING | DETAIL R9 1

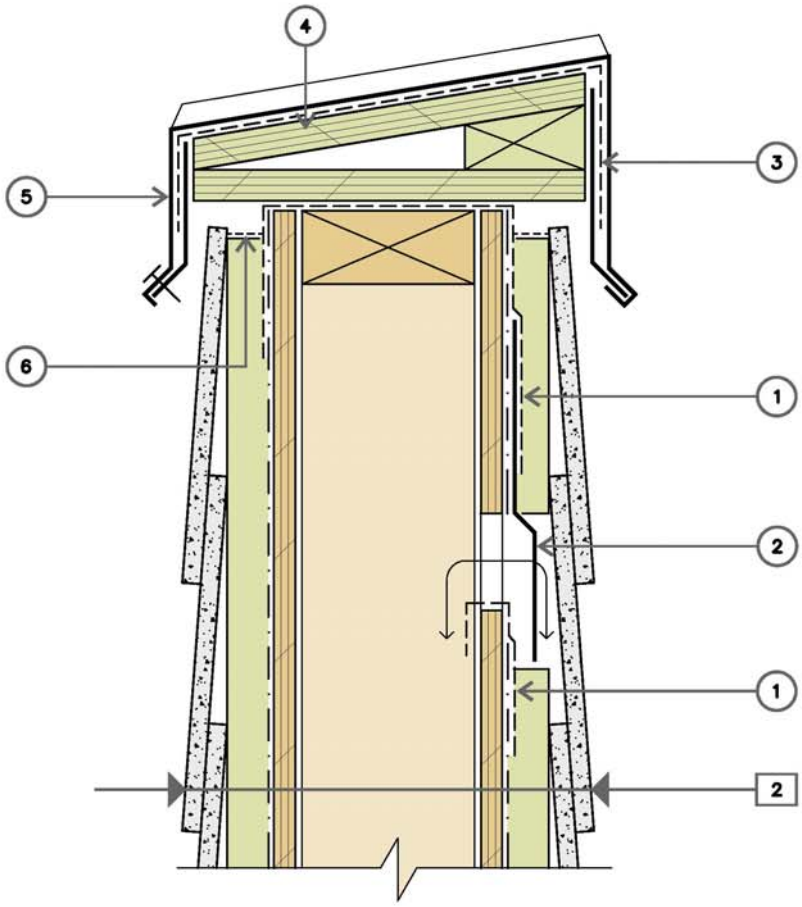

LEGEND

2 Wall Assembly
- Cladding
- Wood strapping (p.t.)
- Vapor permeable WRB
- Sheathing
- Wood framing
- Sheathing
- Vapor permeable WRB
- Wood strapping (p.t.)
- Cladding

1. Self-adhered membrane
2. Metal flashing over continuous vent slot in sheathing
3. High-temperature self-adhered membrane
4. Continuous wood blocking (p.t.)
5. Pre-finished metal cap flashing
6. Insect screen

BALCONY UPSTAND WALL COPING | DETAIL R9 2

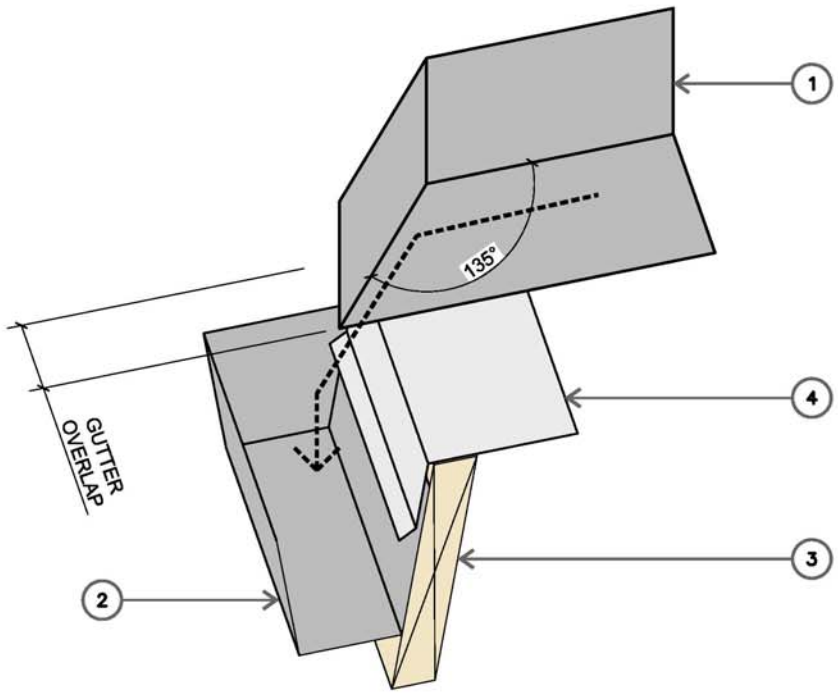

LEGEND

1. One-piece watertight metal flashing diverter with fully sealed and mechanically "clinched" joints
2. Gutter assembly
3. Facia
4. Metal edge flashing

ROOF TO WALL KICKOUT FLASHING | DETAIL R11 1

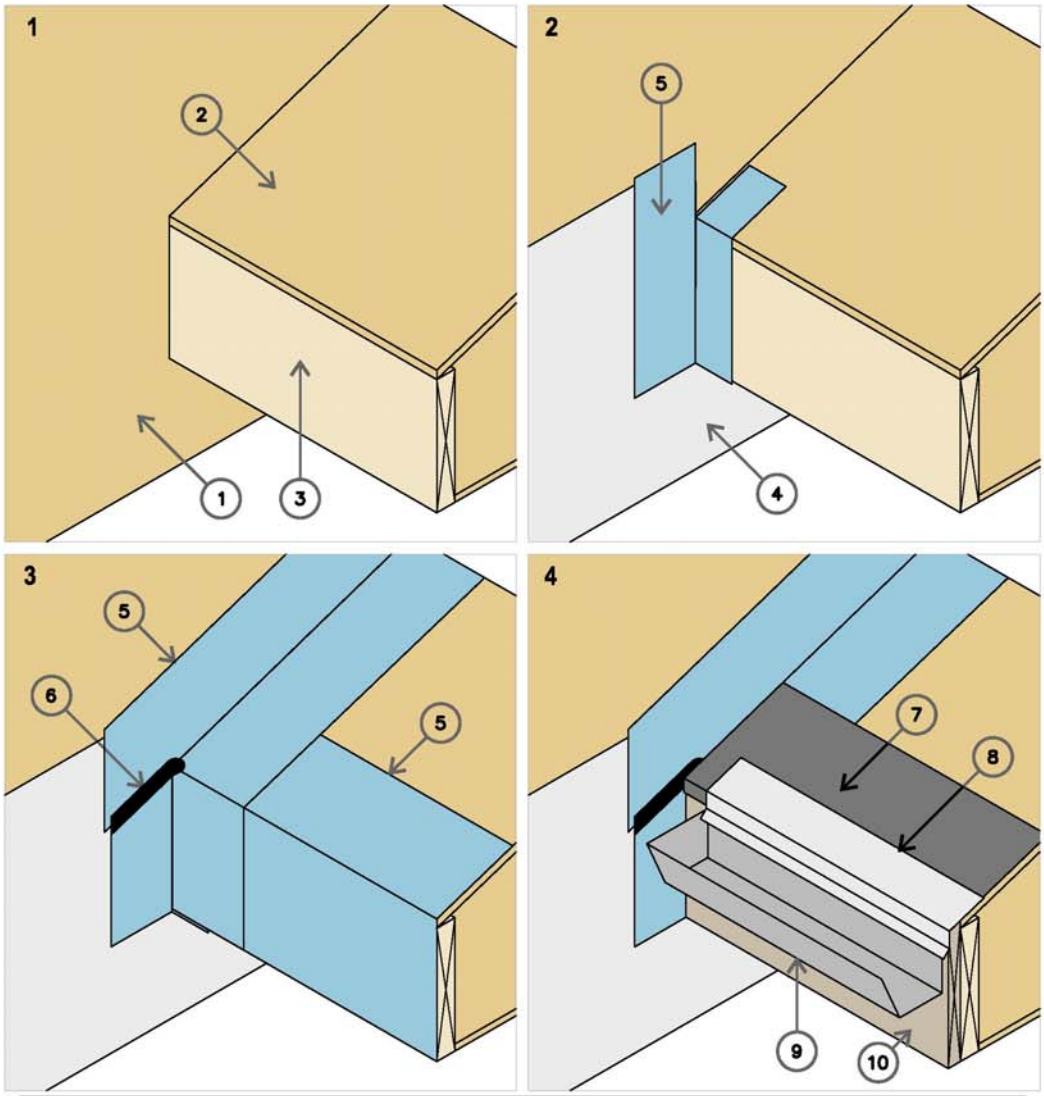

LEGEND

1. Wall framing and sheathing
2. Roof framing and sheathing
3. Subfascia
4. Vapor permeable WRB
5. Self-adhered membrane
6. Sealant
7. Self-adhered roofing underlayment pre-strip
8. Metal edge flashing
9. Gutter
10. Fascia
11. Roofing underlayment
12. Roofing and step flashings at wall
13. Cladding

ROOF TO WALL SEQUENCE | DETAIL R12-A 1

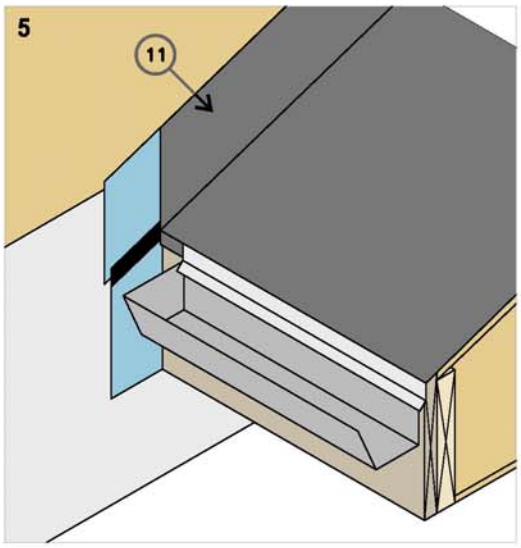

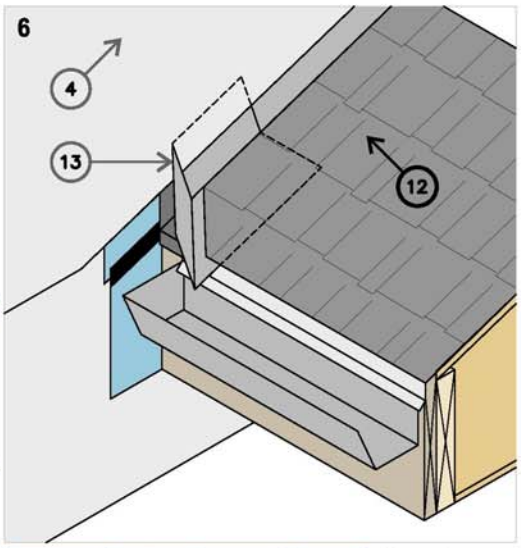

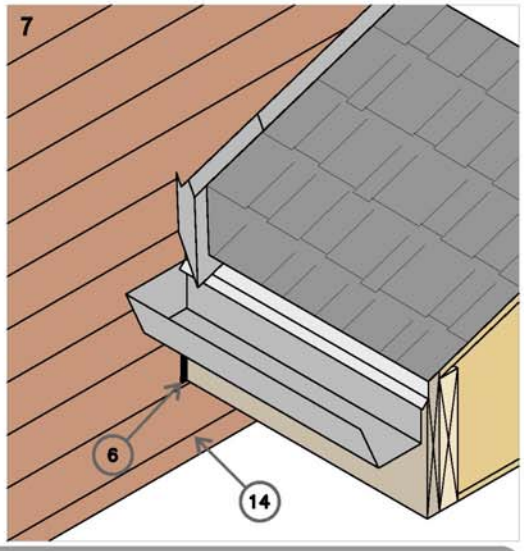

LEGEND

1. Wall framing and sheathing
2. Roof framing and sheathing
3. Subfascia
4. Vapor permeable WRB
5. Self-adhered membrane
6. Sealant
7. Roofing underlayment pre-strip
8. Metal edge flashing
9. Gutter
10. Fascia
11. Roofing underlayment
12. Roofing and step flashings at wall
13. Kickout flashing
14. Cladding

ROOF TO WALL SEQUENCE | DETAIL R12-B 1

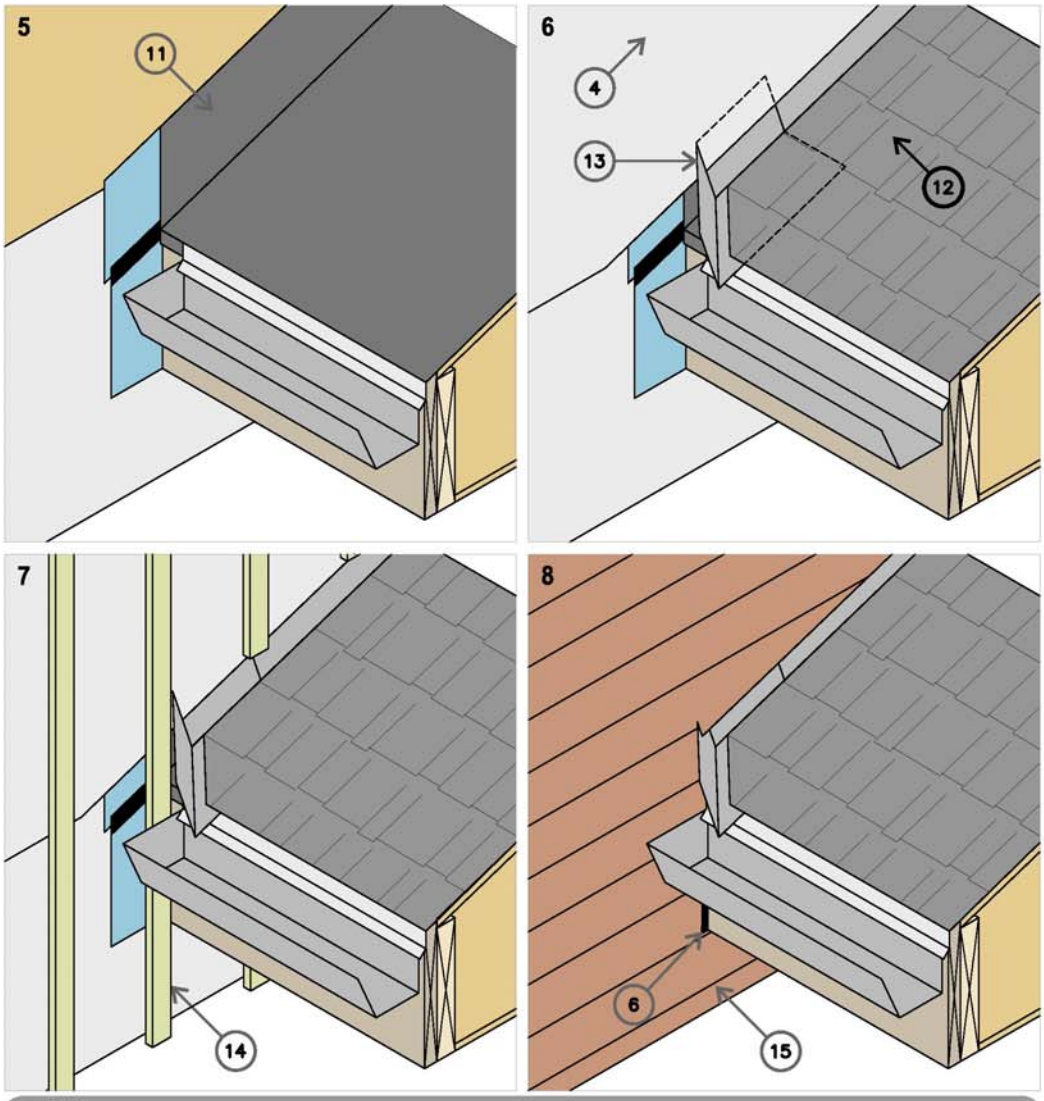

LEGEND

1. Wall framing and sheathing
2. Roof framing and sheathing
3. Subfascia
4. Vapor permeable WRB
5. Self-adhered membrane
6. Sealant
7. Roofing underlayment pre-strip
8. Metal edge flashing
9. Gutter
10. Fascia
11. Roofing underlayment
12. Roofing and step flashings at wall
13. Kickout flashing
14. Strapping
15. Cladding

ROOF TO WALL SEQUENCE | DETAIL R12-B 2

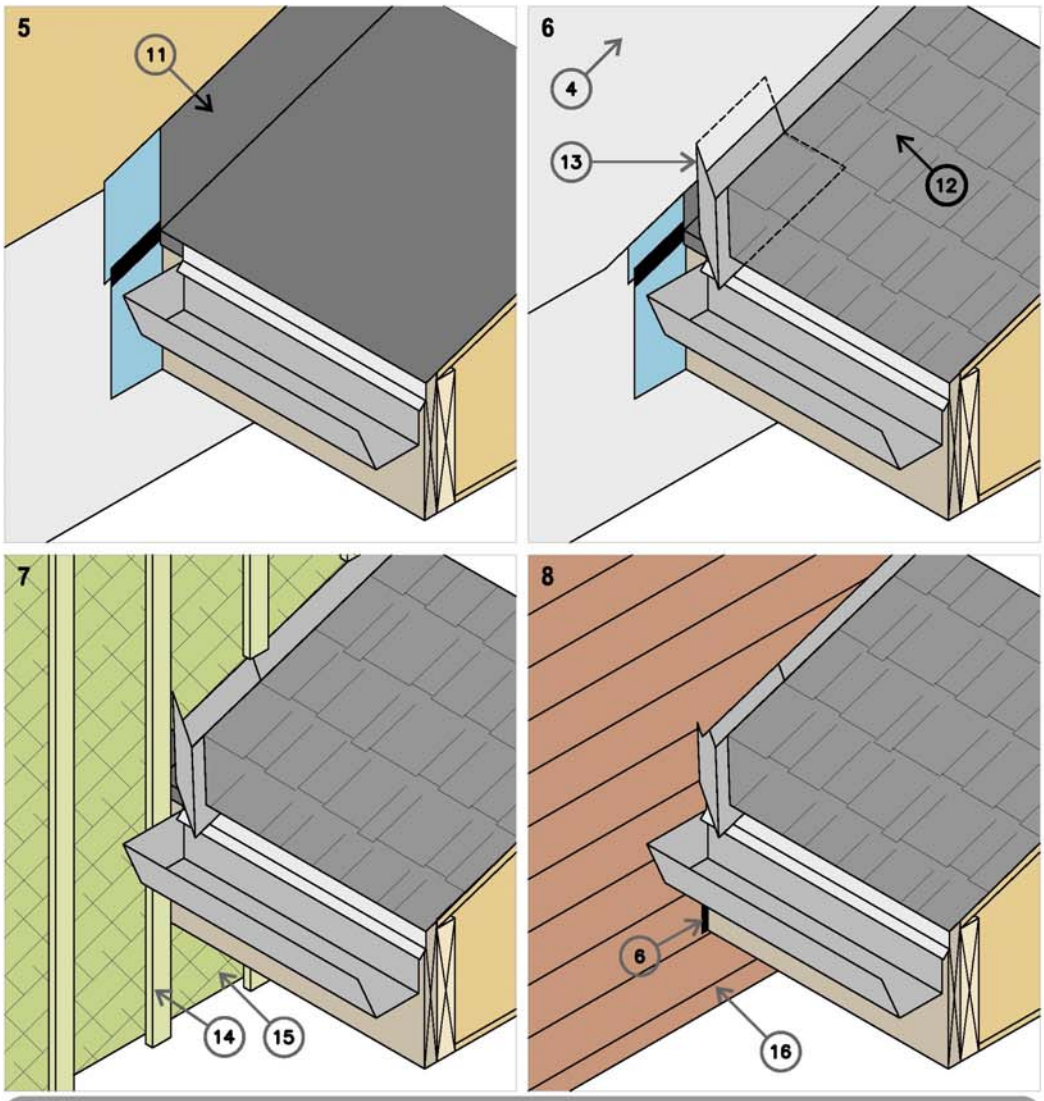

LEGEND

1. Wall framing and sheathing
2. Roof framing and sheathing
3. Subfascia
4. Vapor permeable WRB
5. Self-adhered membrane
6. Sealant
7. Roofing underlayment pre-strip
8. Metal edge flashing
9. Gutter
10. Fascia
11. Roofing underlayment
12. Roofing and step flashings at wall
13. Kickout flashing
14. Strapping
15. Semi rigid insulation
16. Cladding

ROOF TO WALL SEQUENCE | DETAIL R12-B 3&4

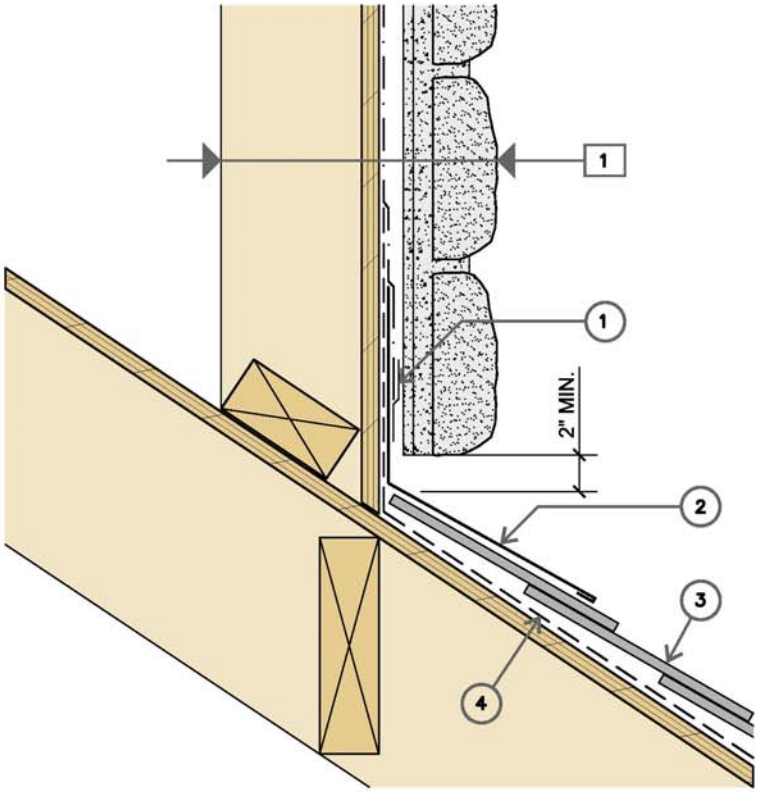

LEGEND

1 Wall Assembly
- Cladding
- Vapor permeable WRB
- Sheathing
- Wood framing

1. A/B Tape
2. Pre-finished metal flashing
3. Roofing
4. Roofing underlayment

CHIMNEY AT ROOF | DETAIL R15 1

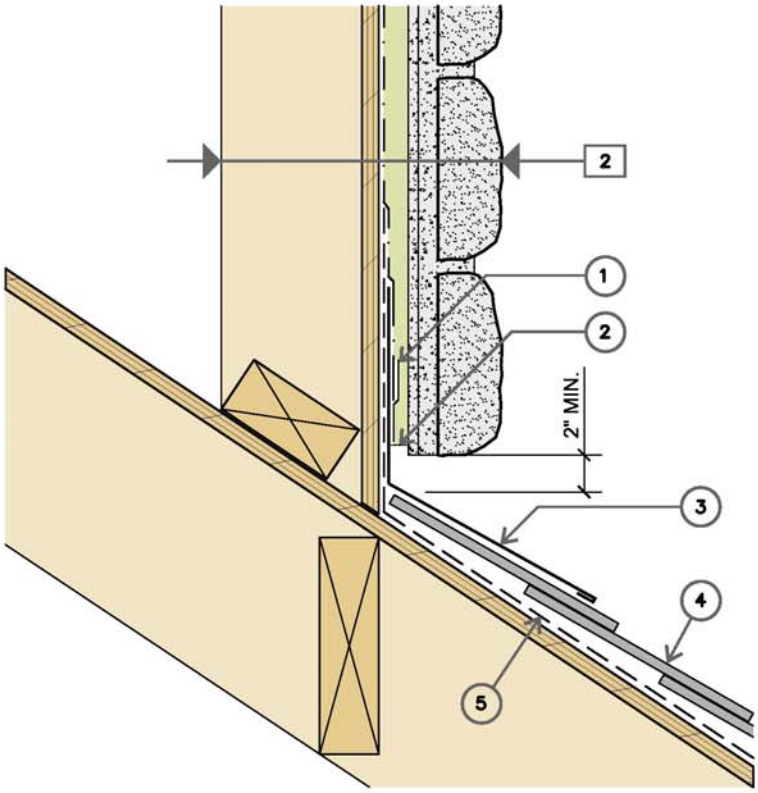

LEGEND

2 Wall Assembly
- Cladding
- Wood strapping (p.t.)
- Vapor permeable WRB
- Sheathing
- Wood framing

1. A/B Tape
2. Insect screen
3. Pre-finished metal flashing
4. Roofing
5. Roofing underlayment

CHIMNEY AT ROOF | DETAIL R15 2

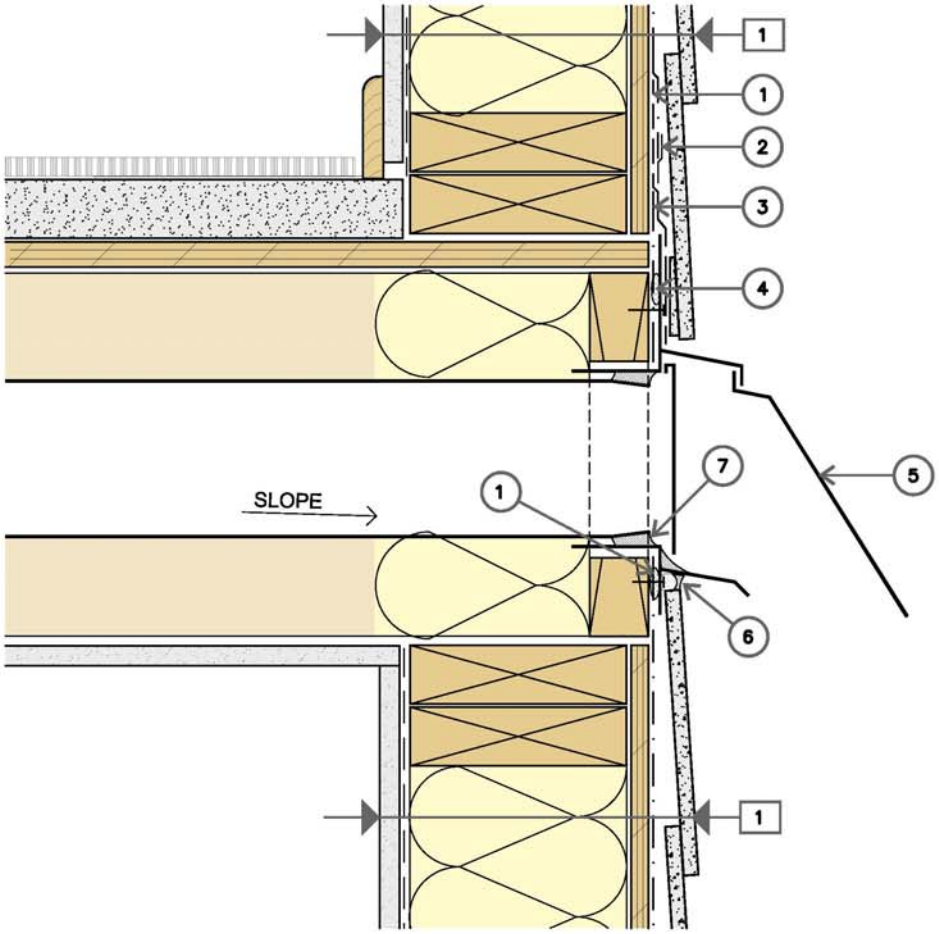

LEGEND

1 Wall Assembly
- Cladding
- Vapor permeable WRB
- Sheathing
- Wood framing with batt insulation
- Vapor retarder
- Gypsum board

1. Self-adhered membrane
2. A/B Tape
3. Vapor permeable WRB
4. A/B Sealant
5. Two-piece exhaust vent
6. Backer rod and sealant at bottom and sides
7. Sealant all around annular space

DRYER VENT FLASHING | DETAIL W5 1

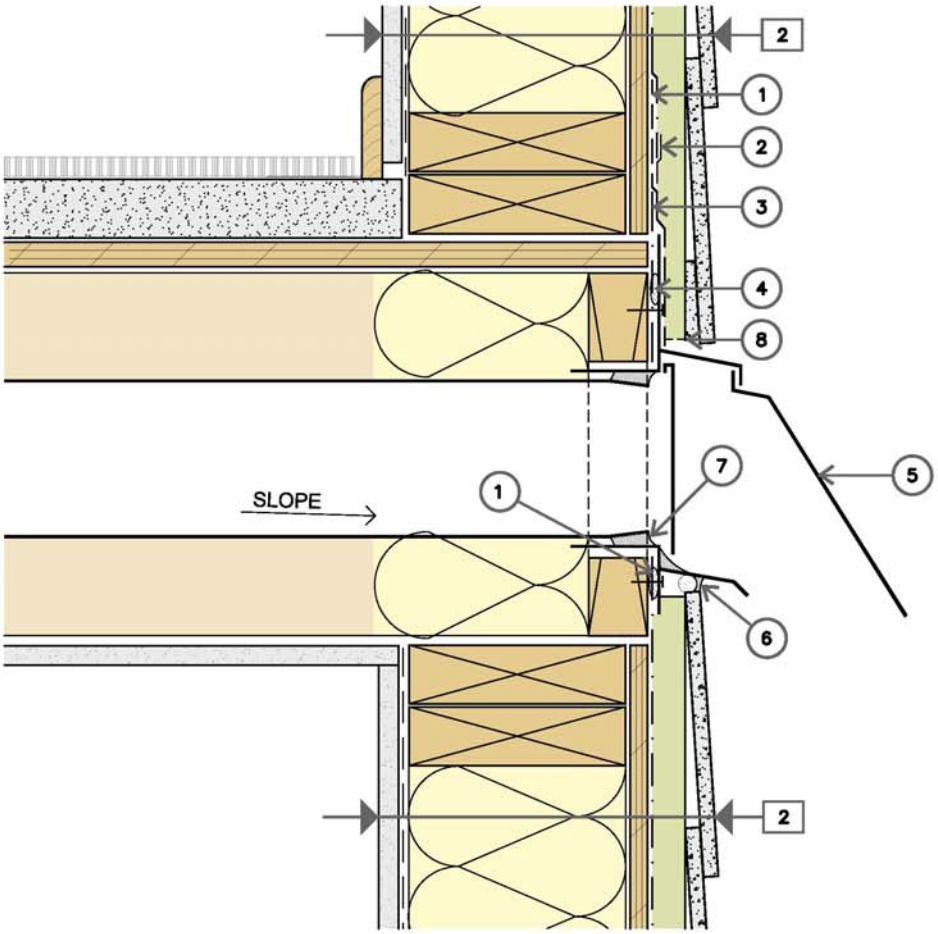

LEGEND

2 Wall Assembly
- Cladding
- Wood strapping (p.t.)
- Vapor permeable WRB
- Sheathing
- Wood framing with batt insulation
- Vapor retarder
- Gypsum board

1. Self-adhered membrane
2. A/B Tape
3. Vapor permeable WRB
4. A/B Sealant
5. Two-piece exhaust vent
6. Backer rod and sealant at bottom and sides
7. Sealant all around annular space
8. Insect screen

DRYER VENT FLASHING | DETAIL W5 2

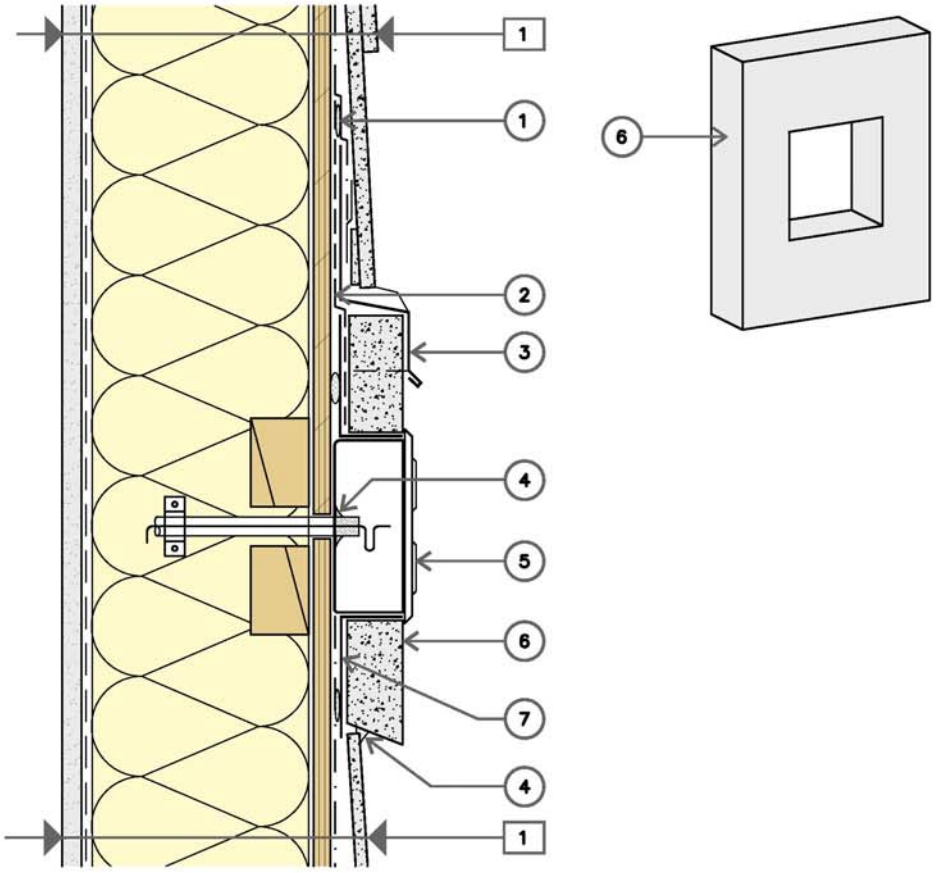

LEGEND

1 Wall Assembly
- Cladding
- Vapor permeable WRB
- Sheathing
- Wood framing with batt insulation
- Vapor retarder
- Gypsum board

1. A/B Sealant
2. Self-adhered membrane lapped over Quickflash assembly at top and sides
3. Pre-finished metal flashing w/end dams
4. Sealant
5. Weatherproof thin profile electrical box with cover plate, gasket, and rigid conduit pipe clamped to stud end of pipe filled with expanding foam
6. Trim block
7. Quickflash assembly bed in sealant all around

TYPICAL ELECTRICAL BOX FLASHING | DETAIL W7.1 1

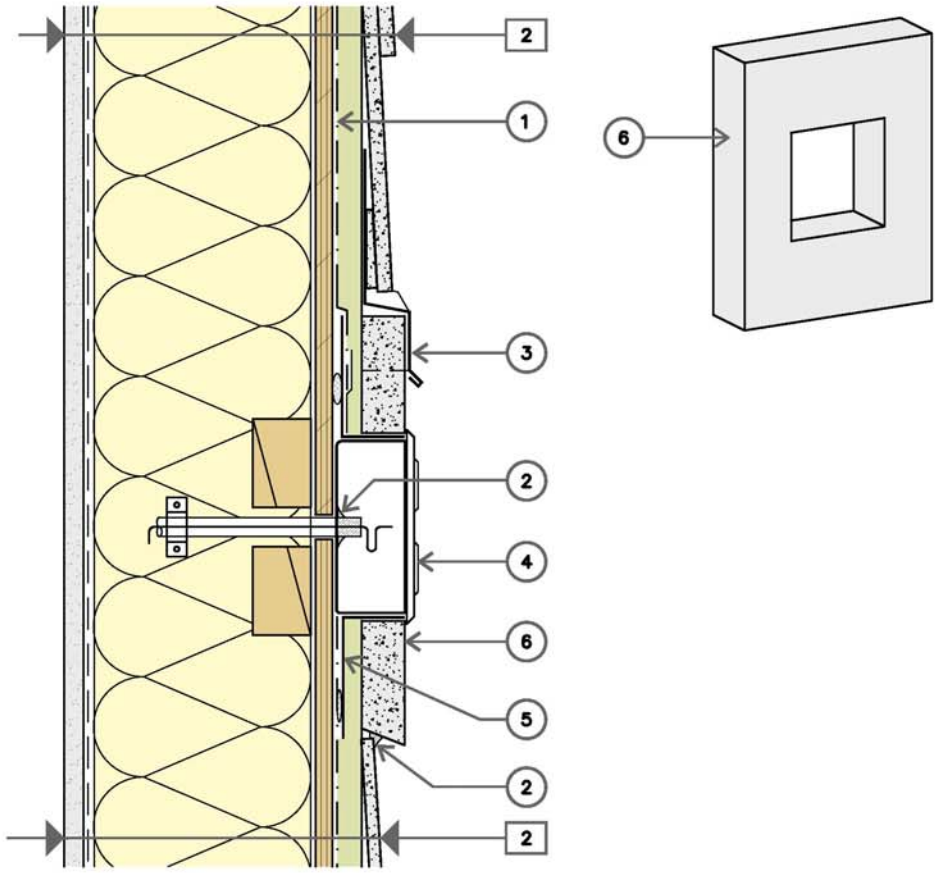

LEGEND

2 Wall Assembly
- Cladding
- Wood strapping (p.t.)
- Vapor permeable WRB
- Sheathing
- Wood framing with batt insulation
- Vapor retarder
- Gypsum board

1. Permeable WRB lapped and taped over Quickflash assembly at top and sides, lapped under Quickflash at bottom
2. Sealant
3. Pre-finished metal flashing w/end dams
4. Weatherproof thin profile electrical box with cover plate, gasket, and rigid conduit pipe clamped to stud end of pipe filled with expanding foam
5. Quickflash assembly bed in sealant all around
6. Trim block

TYPICAL ELECTRICAL BOX FLASHING | DETAIL W7.1 2

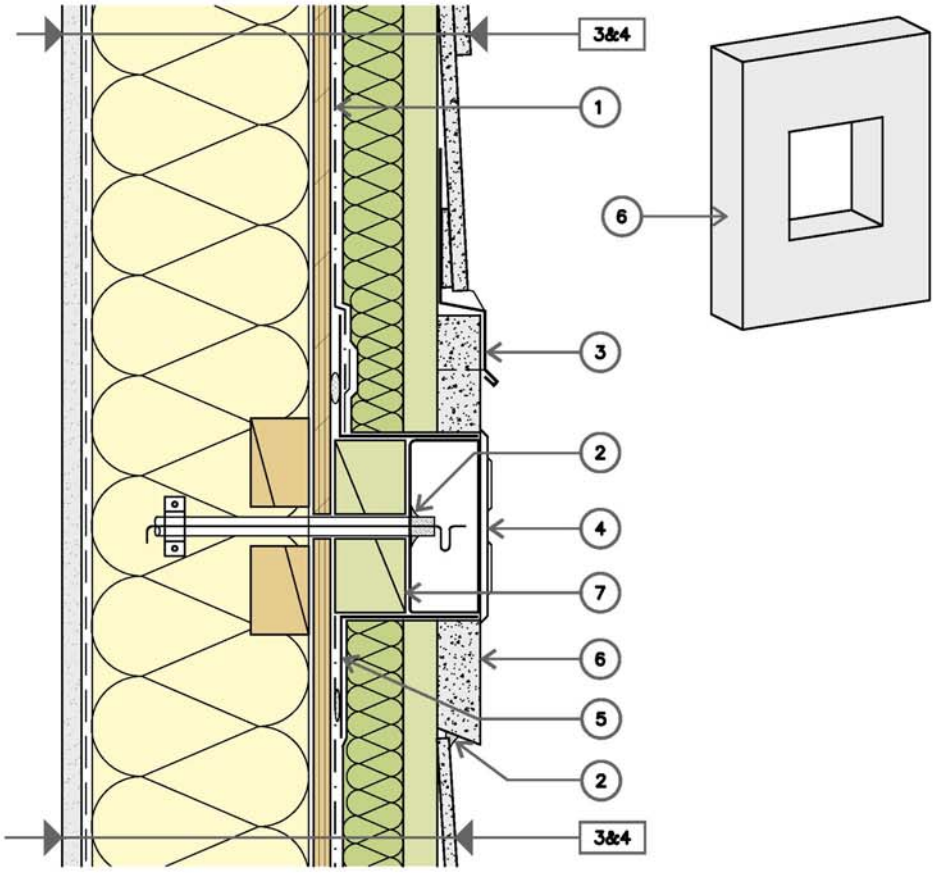

LEGEND

3&4 Wall Assembly
- Cladding
- Wood strapping (p.t.)
- Semi rigid insulation
- Vapor permeable WRB
- Sheathing
- Wood framing with batt insulation
- Vapor retarder
- Gypsum board

1. Permeable WRB lapped and taped over Quickflash assembly at top and sides, lapped under Quickflash at bottom
2. Sealant
3. Pre-finished metal flashing w/end dams
4. Weatherproof thin profile electrical box with cover plate, gasket, and rigid conduit pipe clamped to stud end of pipe filled with expanding foam
5. Quickflash assembly bed in sealant all around
6. Trim block
7. Wood shim (p.t.)

TYPICAL ELECTRICAL BOX FLASHING | DETAIL W7.1 3&4

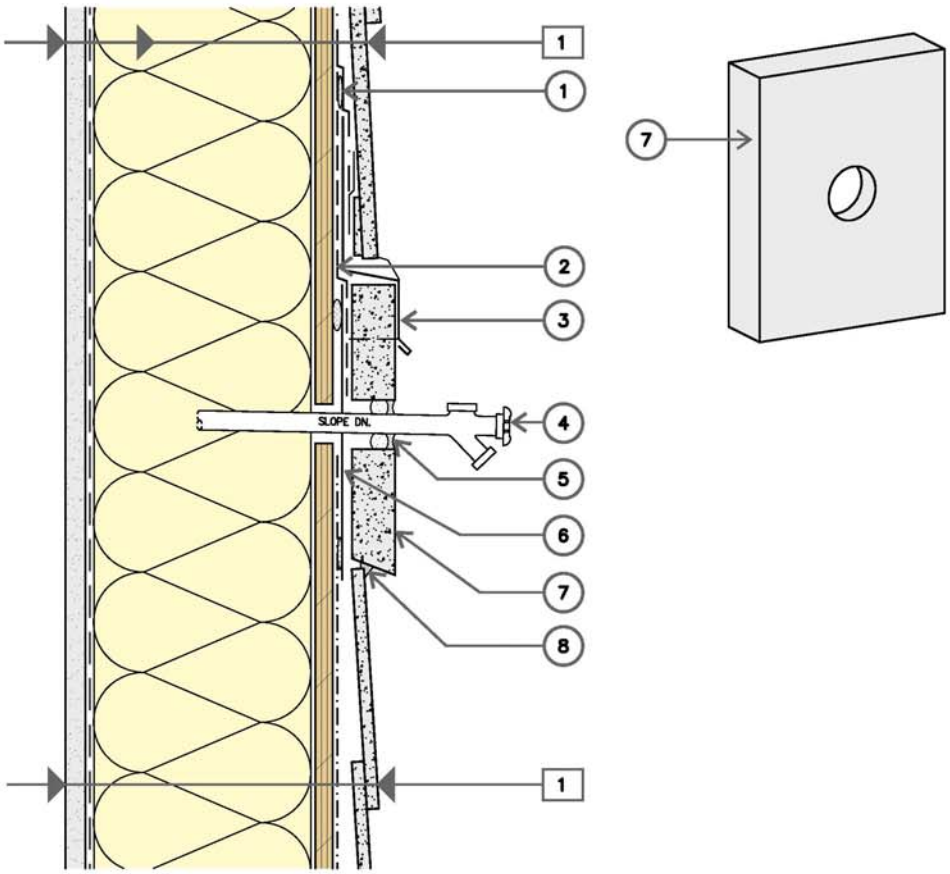

LEGEND

1 Wall Assembly
- Cladding
- Vapor permeable WRB
- Sheathing
- Wood framing with batt insulation
- Vapor retarder
- Gypsum board

1. A/B Sealant
2. Self-adhered membrane lapped over Quickflash assembly at top and sides
3. Pre-finished metal flashing w/end dams
4. Hose bib with pipe secured to framing (Gas line detail similar)
5. Backer rod and sealant all around
6. Quickflash assembly bed in sealant all around
7. Trim block
8. Sealant

TYPICAL PENETRATION FLASHING | DETAIL W7.2 1

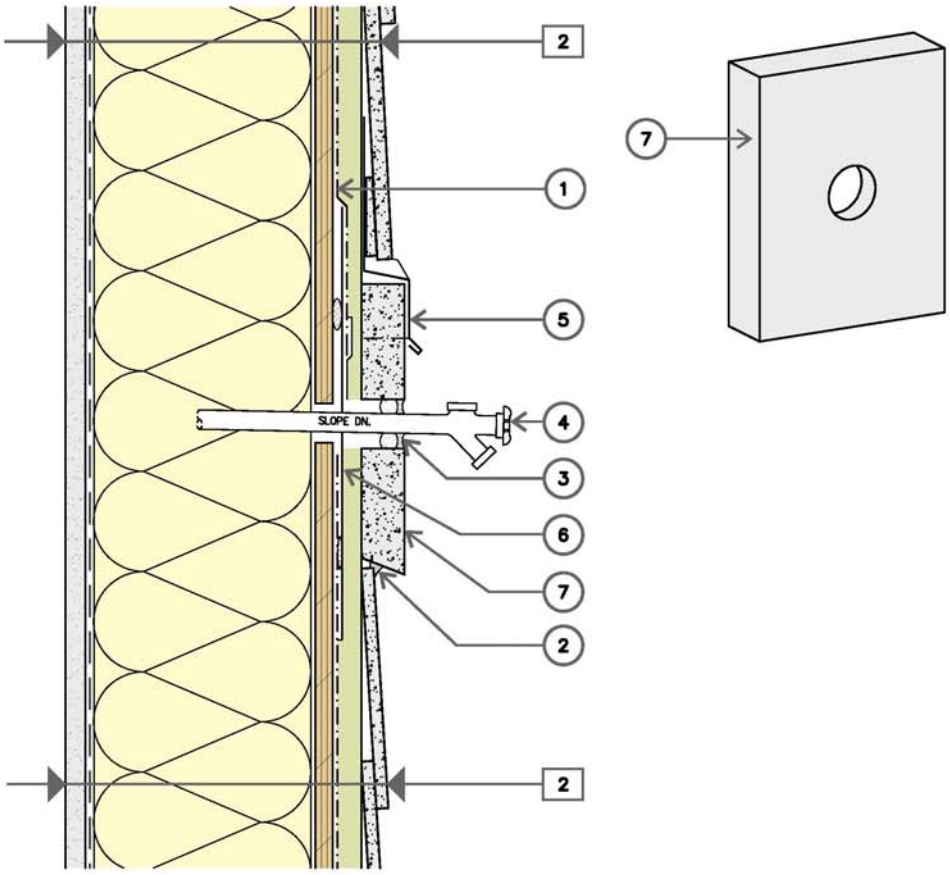

LEGEND

2 Wall Assembly
- Cladding
- Wood strapping (p.t.)
- Vapor permeable WRB
- Sheathing
- Wood framing with batt insulation
- Vapor retarder
- Gypsum board

1. Permeable WRB lapped and taped over Quickflash assembly at top and sides, lapped under Quickflash at bottom
2. Sealant
3. Backer rod and sealant all around
4. Hose bib with pipe secured to framing (Gas line detail similar)
5. Pre-finished metal flashing w/end dams
6. Quickflash assembly bed in sealant all around
7. Trim block

TYPICAL PENETRATION FLASHING | DETAIL W7.2 2

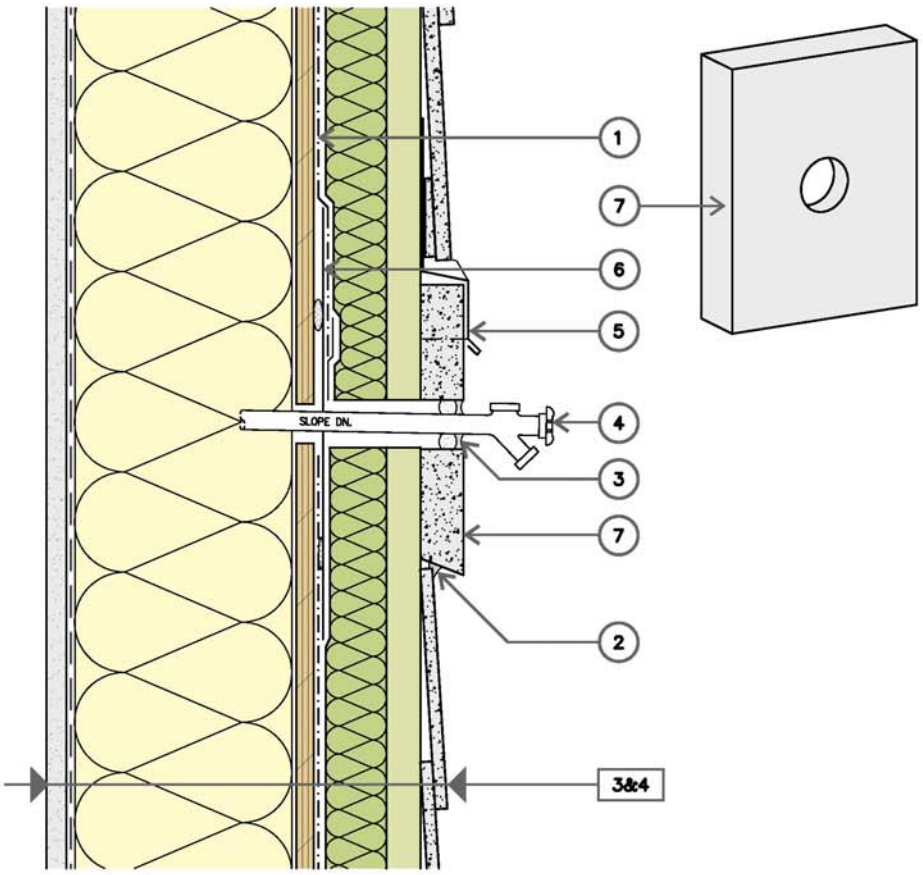

LEGEND

3&4 Wall Assembly
- Cladding
- Wood strapping (p.t.)
- Semi rigid insulation
- Vapor permeable WRB
- Sheathing
- Wood framing with batt insulation
- Vapor retarder
- Gypsum board

1. Permeable WRB lapped and taped over Quickflash assembly at top and sides, lapped under Quickflash at bottom
2. Sealant
3. Backer rod and sealant all around
4. Hose bib with pipe secured to framing (Gas line detail similar)
5. Pre-finished metal flashing w/end dams
6. Quickflash assembly bed in sealant all around
7. Trim block

TYPICAL PENETRATION FLASHING | DETAIL W7.2 3&4

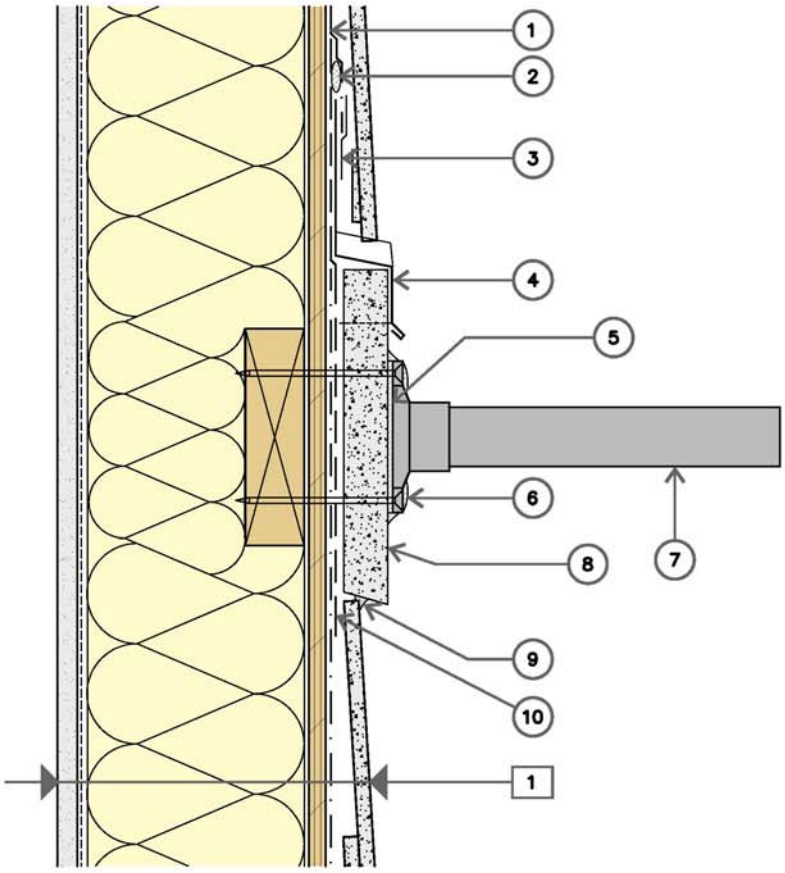

LEGEND

1 Wall Assembly
- Cladding
- Vapor permeable WRB
- Sheathing
- Wood framing with batt insulation
- Vapor retarder
- Gypsum board

1. Permeable WRB lapped over metal flashing
2. A/B Sealant
3. A/B Tape
4. Pre-finished metal flashing w/end dams
5. Neoprene gasket
6. Sealant at fastener head and all around bracket
7. Painted metal railing
8. Trim
9. Sealant
10. Self-adhered membrane

GUARDRAIL ATTACHMENT | DETAIL W9 1

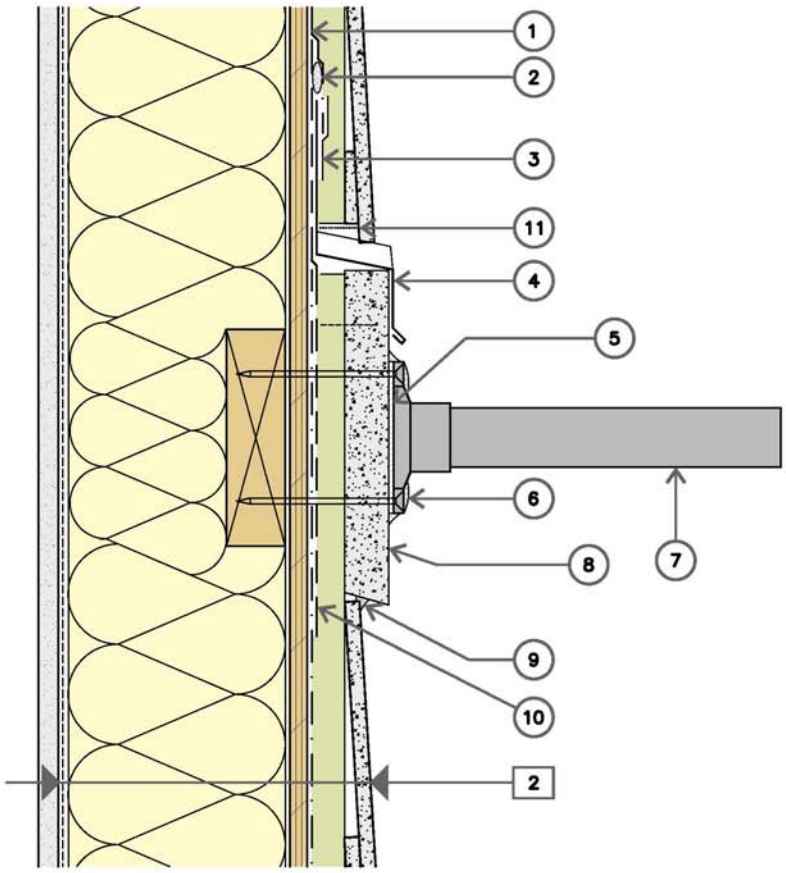

LEGEND

2 Wall Assembly
- Cladding
- Wood strapping (p.t.)
- Vapor permeable WRB
- Sheathing
- Wood framing with batt insulation
- Vapor retarder
- Gypsum board

1. Permeable WRB lapped over metal flashing
2. A/B Sealant
3. A/B Tape
4. Pre-finished metal flashing w/end dams
5. Neoprene gasket
6. Sealant at fastener head and all around bracket
7. Painted metal railing
8. Trim
9. Sealant
10. Self-adhered membrane
11. Insect screen

GUARDRAIL ATTACHMENT | DETAIL W9 2

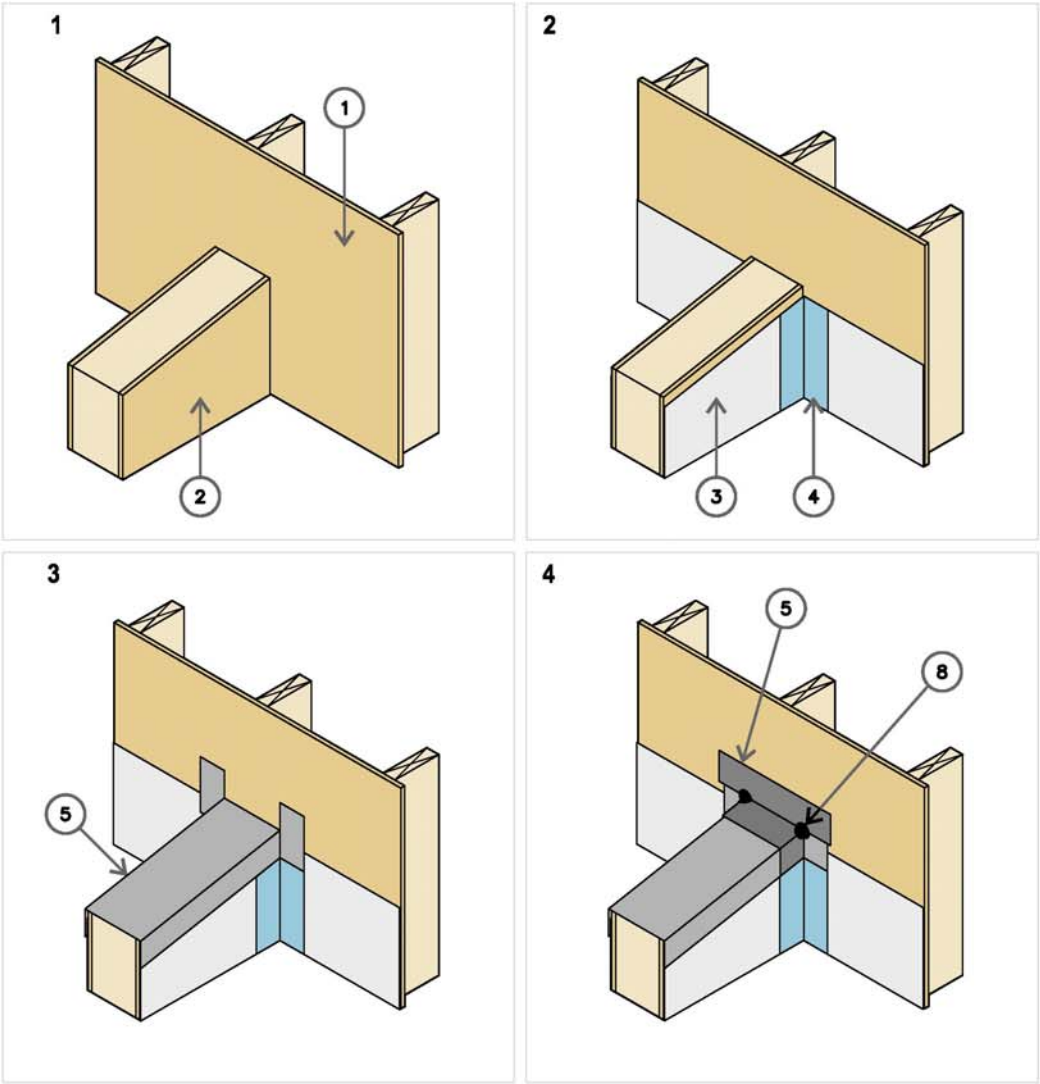

LEGEND

1. Wall framing
2. Divider framing
3. Vapor permeable WRB
4. Self-adhered membrane
5. High-temperature self-adhered membrane
6. Pre-finished metal saddle flashing
7. Cladding
8. Sealant

PARTITION WALL SEQUENCE | DETAIL W10.1-A 1

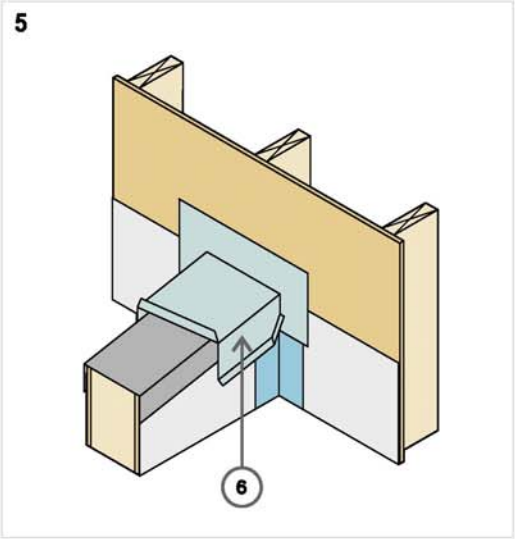

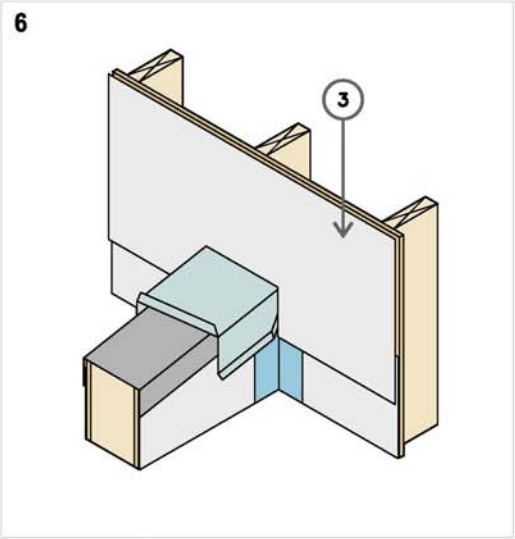

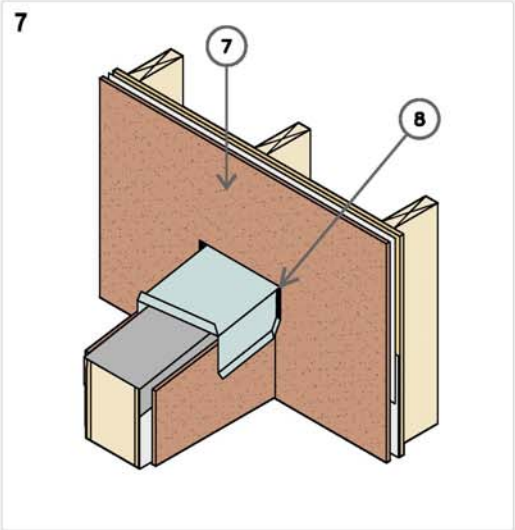

LEGEND

1. Wall framing
2. Divider framing
3. Vapor permeable WRB
4. Self-adhered membrane
5. High-temperature self-adhered membrane
6. Pre-finished metal saddle flashing
7. Cladding
8. Sealant

PARTITION WALL SEQUENCE | DETAIL W10.1-B 1

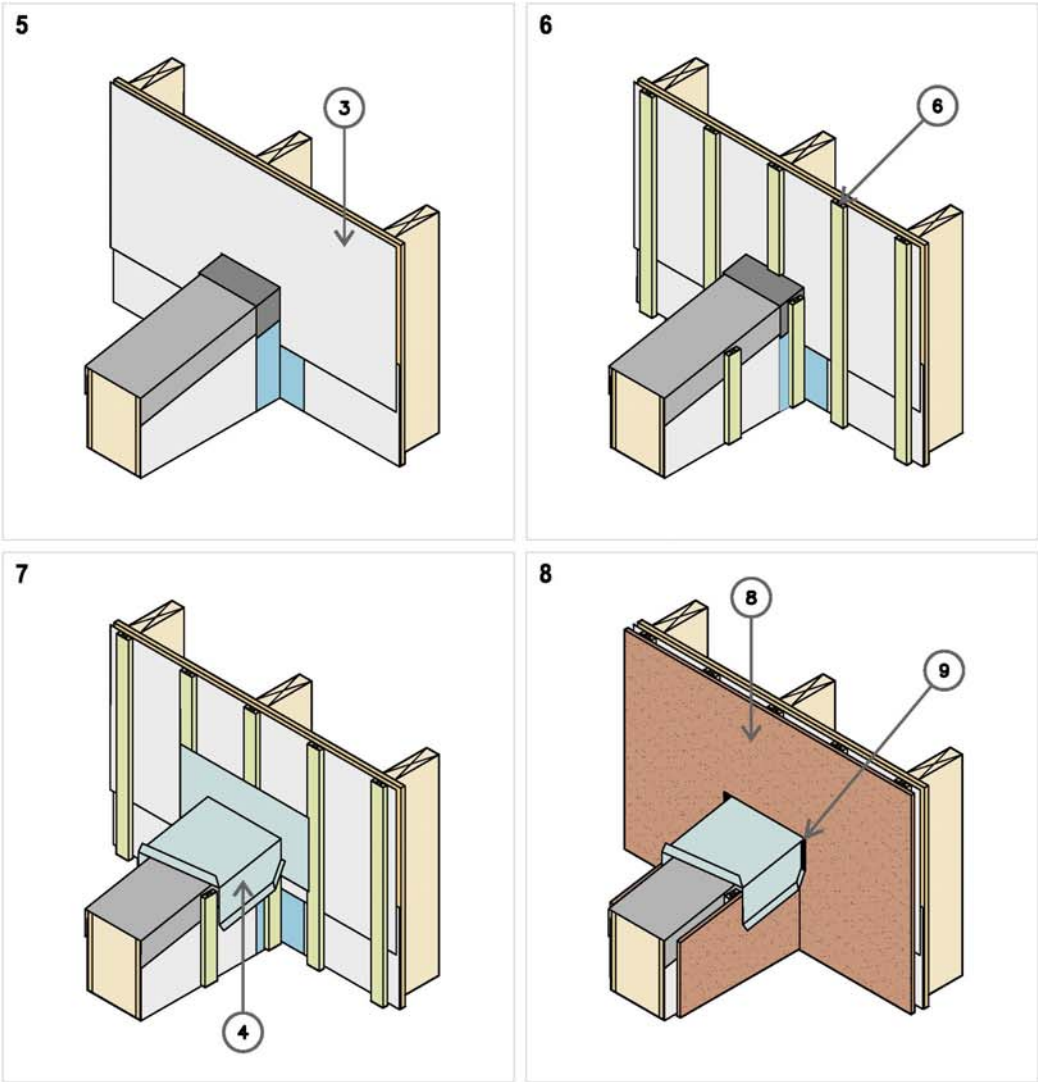

LEGEND

1. Wall framing
2. Divider framing
3. Vapor permeable WRB
4. Self-adhered membrane
5. High-temperature self-adhered membrane
6. Wood strapping (p.t.)
7. Pre-finished metal saddle flashing
8. Cladding
9. Sealant

PARTITION WALL SEQUENCE | DETAIL W10.1-B 2

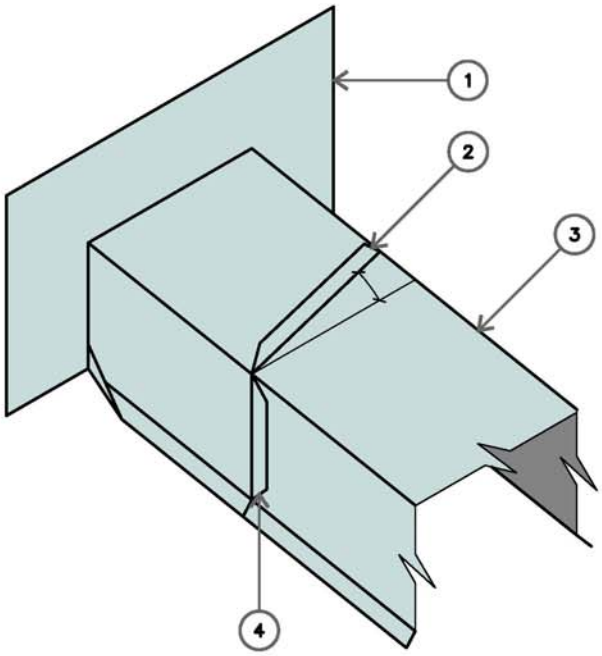

LEGEND

1. One-piece, fully soldered, watertight metal saddle flashing
2. Standing seam angled for drainage
3. Partition wall cap flashing
4. Folded seam

PARTITION WALL FLASHING | DETAIL W10.1-C 1

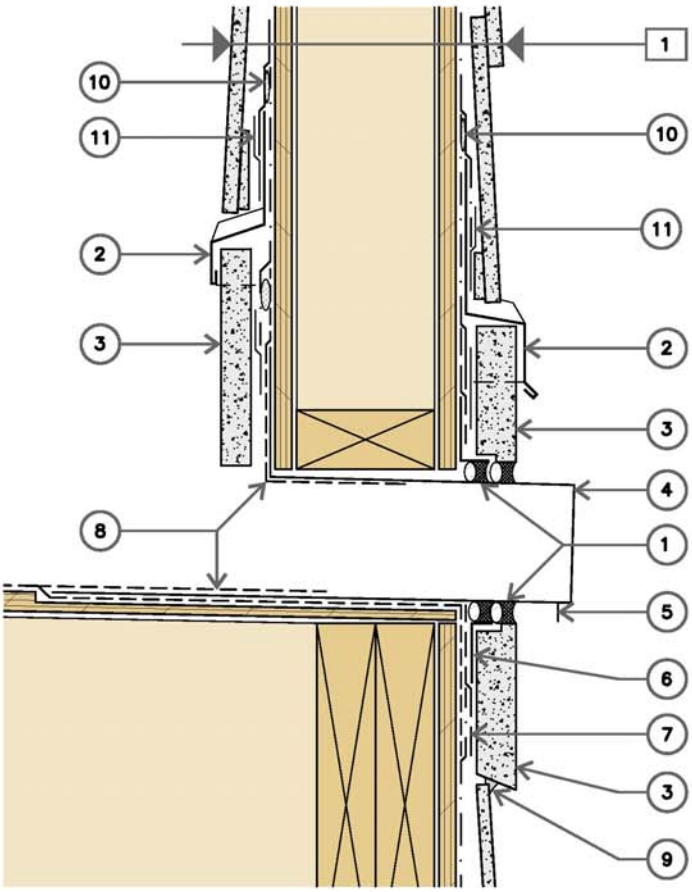

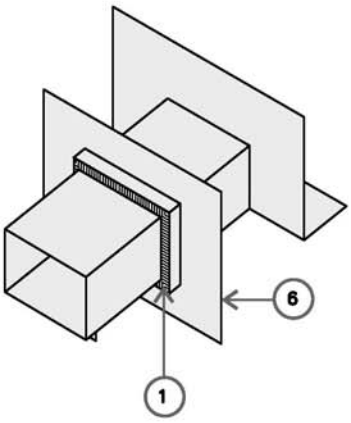

ISOMETRIC
(SCUPPER ASSEMBLY)

LEGEND

1 Wall Assembly
- Cladding
- Vapor permeable WRB
- Sheathing (p.t.)
- Wood framing
- Sheathing (p.t.)
- Vapor permeable WRB
- Cladding

1. Backer rod and sealant
2. Pre-finished metal flashing w/end dams
3. Trim
4. Scupper assembly
5. Bent tab or sealant drip
6. Metal scupper flange
7. Self-adhered membrane
8. Deck membrane
9. Sealant
10. A/B Sealant
11. A/B Tape

BALCONY / DECK SCUPPER | DETAIL W14 1

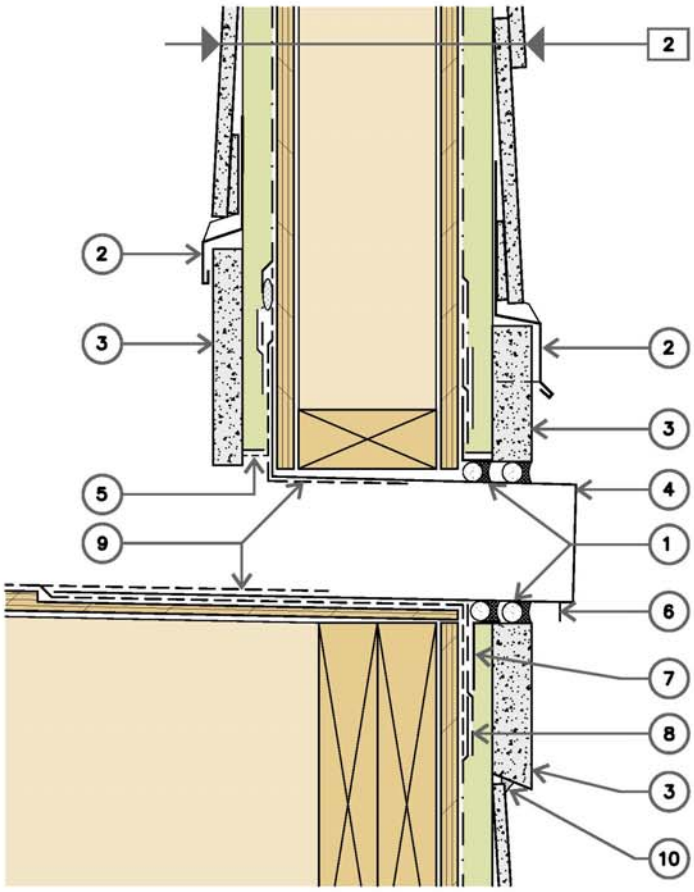

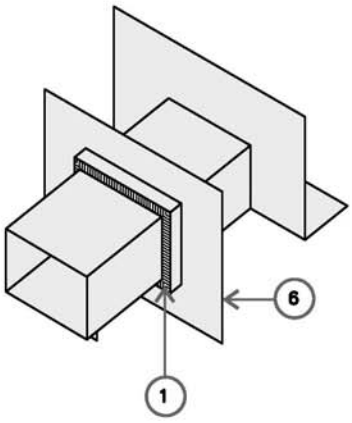

ISOMETRIC
(SCUPPER ASSEMBLY)

LEGEND

2 Wall Assembly
- Cladding
- Wood strapping (p.t.)
- Vapor permeable WRB
- Sheathing (p.t.)
- Wood framing
- Sheathing (p.t.)
- Vapor permeable WRB
- Wood strapping (p.t.)
- Cladding

1. Backer rod and sealant
2. Pre-finished metal flashing w/end dams
3. Trim
4. Scupper assembly
5. Insect screen
6. Bent tab or sealant drip
7. Metal scupper flange
8. Self-adhered membrane
9. Deck membrane
10. Sealant

BALCONY / DECK SCUPPER | DETAIL W14 2

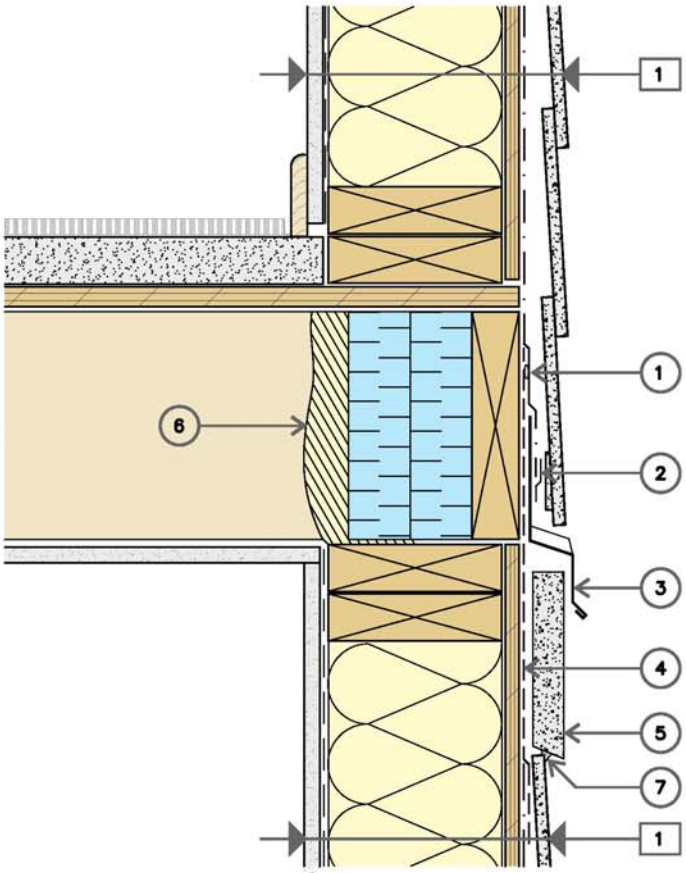

LEGEND

1 Wall Assembly
- Cladding
- Vapor permeable WRB
- Sheathing
- Wood framing with batt insulation
- Vapor retarder
- Gypsum board

1. A/B Sealant
2. A/B Tape
3. Pre-finished metal flashing on sheathing membrane
4. Self-Adhered membrane
5. Trim
6. Extruded polystyrene insulation with spray-in-place foam at edges (Value to be considered by consultant on project-specific basis)
7. Sealant

BELLY BAND TRIM | DETAIL W15 1

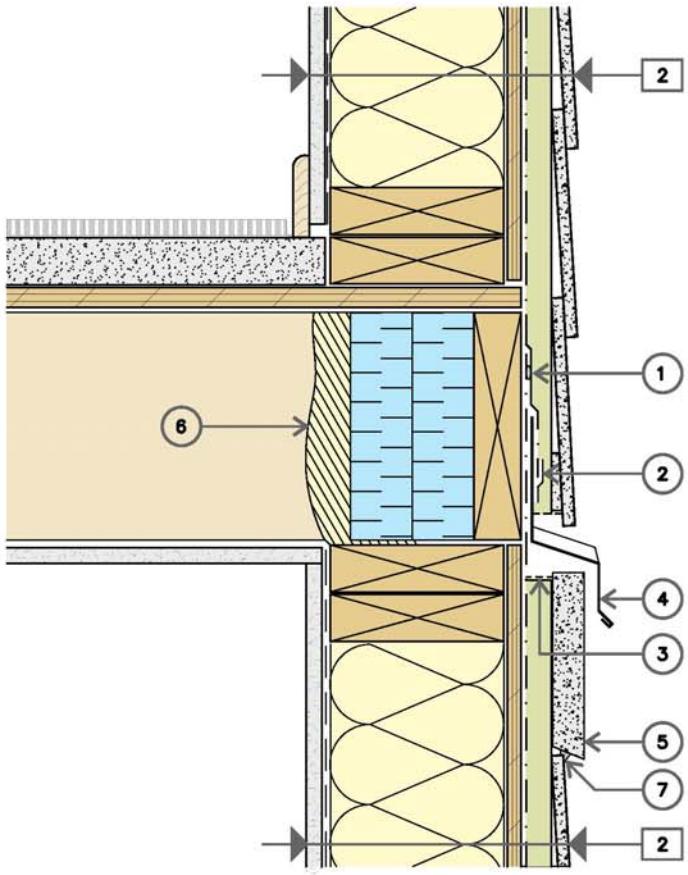

LEGEND

2 Wall Assembly
- Cladding
- Wood strapping (p.t.)
- Vapor permeable WRB
- Sheathing
- Wood framing with batt insulation
- Vapor retarder
- Gypsum board

1. A/B Sealant
2. A/B Tape
3. Insect screen at top & bottom of strapping
4. Pre-finished metal flashing on WRB - Leave vent gap
5. Trim
6. Extruded polystyrene insulation with spray-in-place foam at edges (Value to be considered by consultant on project-specific basis)
7. Sealant

BELLY BAND TRIM | DETAIL W15 2

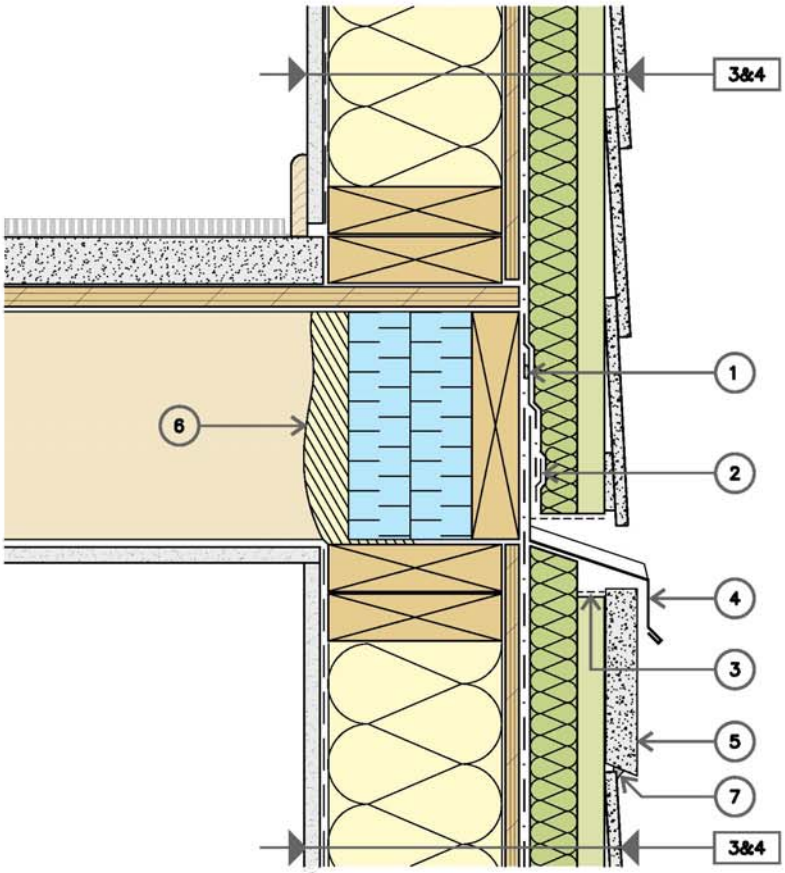

LEGEND

3&4 Wall Assembly
- Cladding
- Wood strapping (p.t.)
- Semi rigid insulation
- Vapor permeable WRB
- Sheathing
- Wood framing with batt insulation
- Vapor retarder
- Gypsum board

1. A/B Sealant
2. A/B Tape
3. Insect screen at top & bottom of strapping
4. Pre-finished metal flashing on WRB - Leave vent gap
5. Trim
6. Extruded polystyrene insulation with spray-in-place foam at edges (Value to be considered by consultant on project-specific basis)
7. Sealant

BELLY BAND TRIM | DETAIL W15 3&4

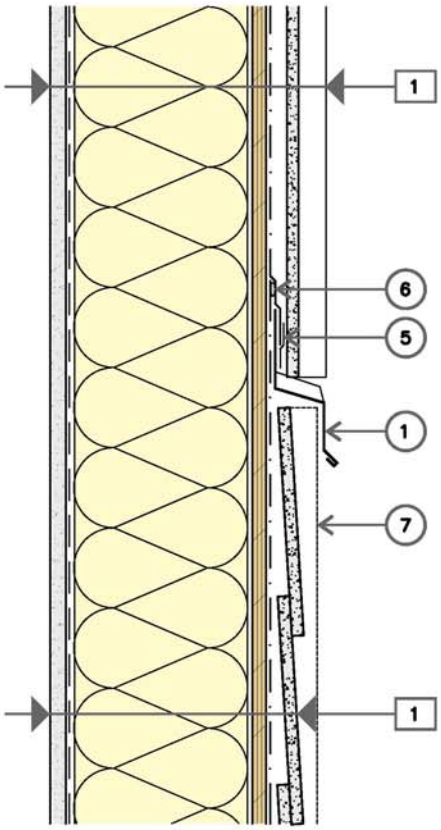

Section Detail

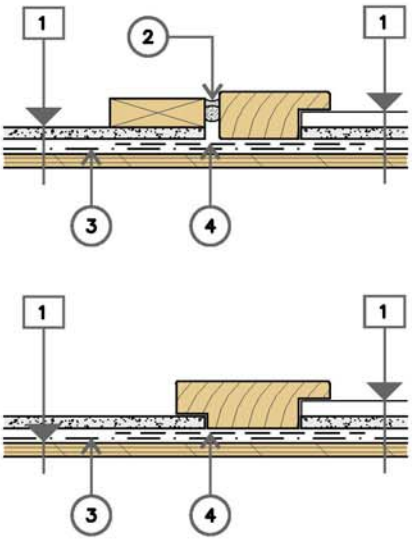

Plan Details

LEGEND

1 Wall Assembly
- Cladding
- Vapor permeable WRB
- Sheathing
- Wood framing with batt insulation
- Vapor retarder
- Gypsum board

1. Pre-finished metal flashing
2. Control joint with backer rod and sealant
3. Vapor permeable WRB
4. Self-Adhered membrane
5. A/B Tape
6. A/B Sealant
7. Trim beyond

CLADDING TRANSITION | DETAIL W16 1

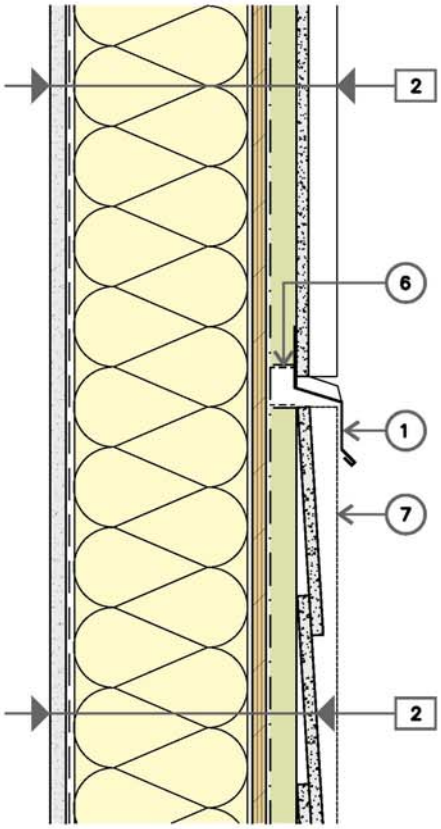

Section Detail

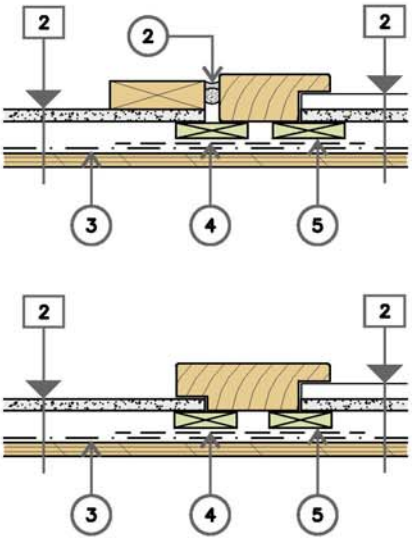

Plan Details

LEGEND

2 Wall Assembly
- Cladding
- Wood strapping (p.t.)
- Vapor permeable WRB
- Sheathing
- Wood framing with batt insulation
- Vapor retarder
- Gypsum board

1. Pre-finished metal flashing
2. Control joint with backer rod and sealant
3. Vapor permeable WRB
4. Self-adhered membrane
5. Wood strapping (p.t.)
6. Insect screen
7. Trim beyond

CLADDING TRANSITION | DETAIL W16 2

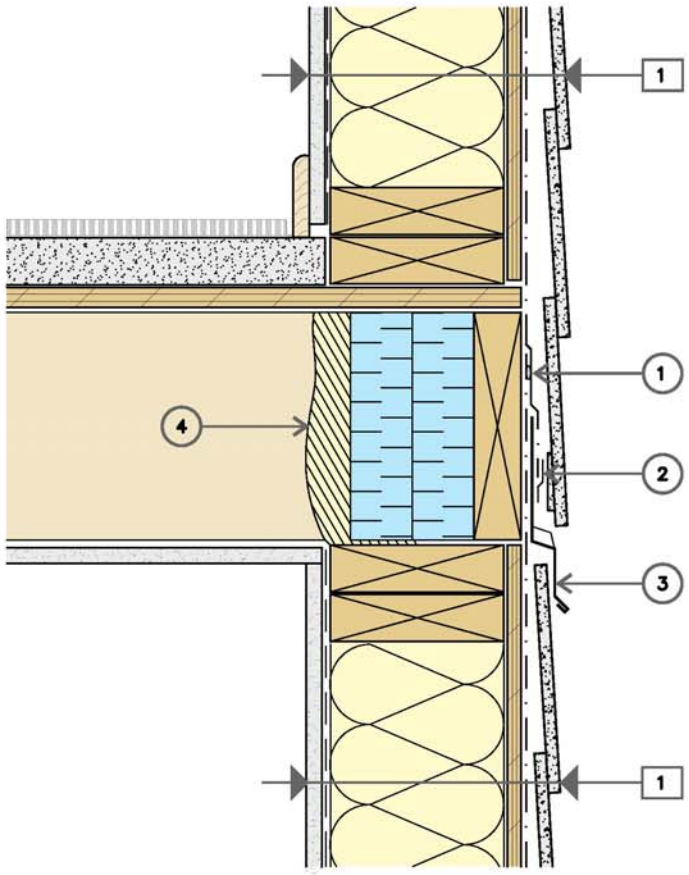

LEGEND

1 Wall Assembly
- Cladding
- Vapor permeable WRB
- Sheathing
- Wood framing with batt insulation
- Vapor retarder
- Gypsum board

1. A/B sealant
2. A/B tape
3. Pre-finished metal flashing on sheathing membrane
4. Extruded polystyrene insulation with spray-in-place foam at edges (Value to be considered by consultant on project-specific basis)

CROSS CAVITY FLASHING | DETAIL W38 1

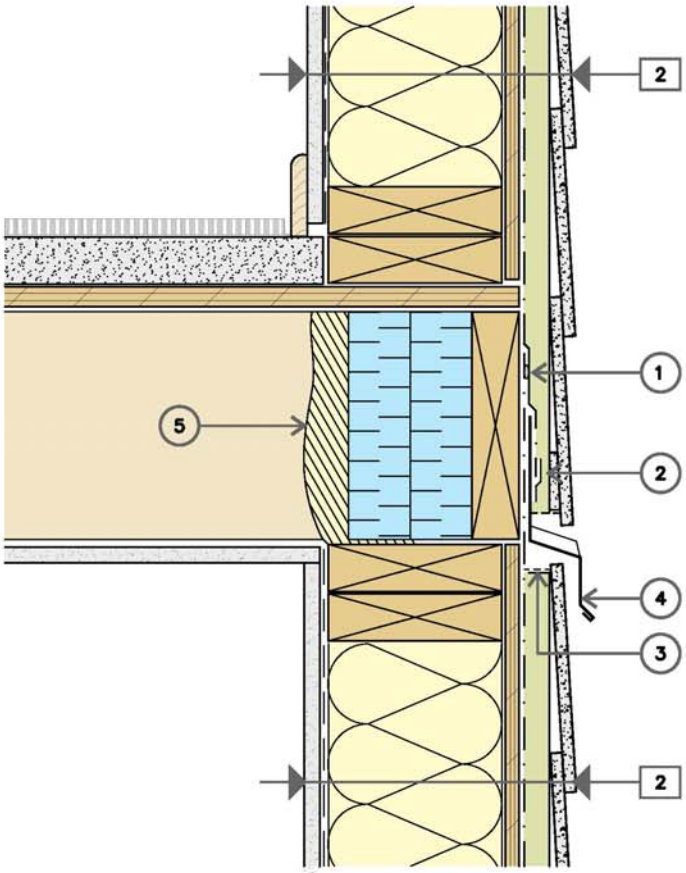

LEGEND

2 Wall Assembly
- Cladding
- Wood strapping (p.t.)
- Vapor permeable WRB
- Sheathing
- Wood framing with batt insulation
- Vapor retarder
- Gypsum board

1. A/B Sealant
2. A/B Tape
3. Insect screen at top & bottom of strapping
4. Pre-finished metal flashing on WRB
5. Extruded polystyrene insulation with spray-in-place foam at edges (Value to be considered by consultant on project-specific basis)

CROSS CAVITY FLASHING | DETAIL W38 2

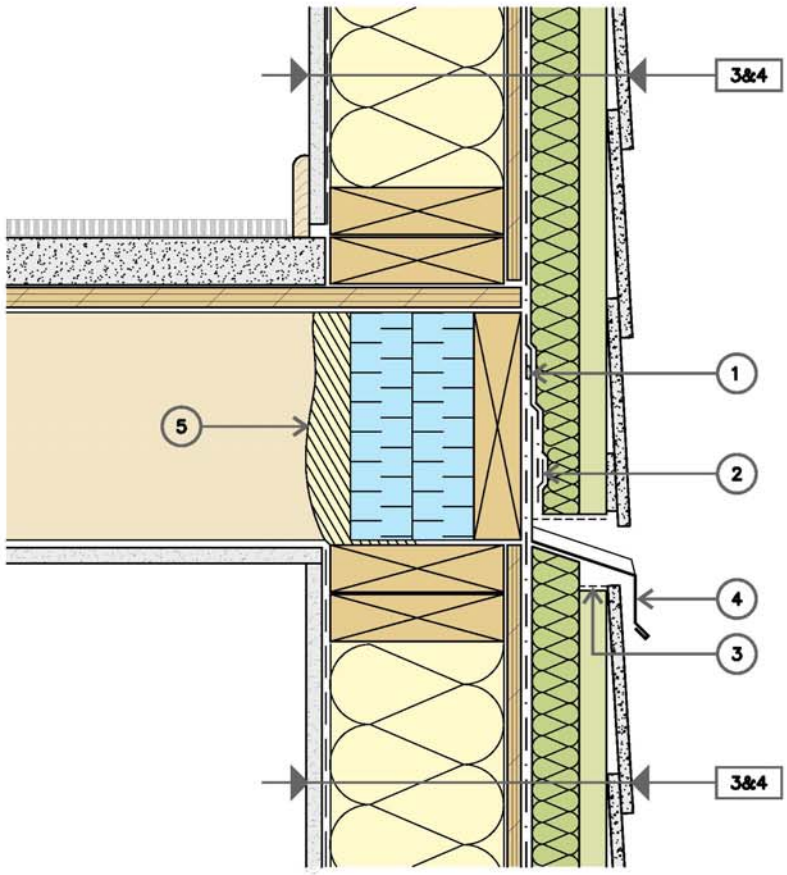

LEGEND

3&4 Wall Assembly
- Cladding
- Wood strapping (p.t.)
- Semi rigid insulation
- Vapor permeable WRB
- Sheathing
- Wood framing with batt insulation
- Vapor retarder
- Gypsum board

1. A/B Sealant
2. A/B Tape
3. Insect screen at top & bottom of strapping
4. Pre-finished metal flashing on WRB
5. Extruded polystyrene insulation with spray-in-place foam at edges (Value to be considered by consultant on project-specific basis)

CROSS CAVITY FLASHING | DETAIL W38 3&4

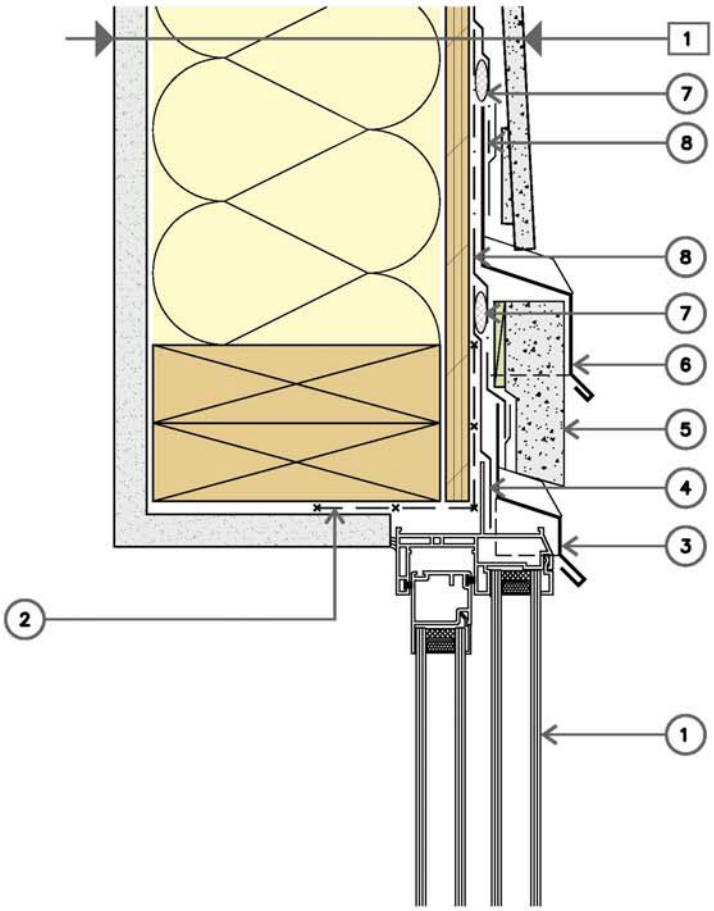

LEGEND

1 Wall Assembly
- Cladding
- Vapor permeable WRB
- Sheathing
- Wood framing with batt insulation
- Vapor retarder
- Gypsum board

1. Window assembly
2. Existing membrane flashing
3. Pre-finished metal flashing w/end dams
4. Self-adhered membrane
5. Trim on vertical strapping (p.t.)
6. Pre-finished metal flashing w/end dams
7. A/B Sealant
8. Vapor permeable WRB lapped over and taped to flashing

WINDOW HEAD - IN SITU | DETAIL WD1.1 1

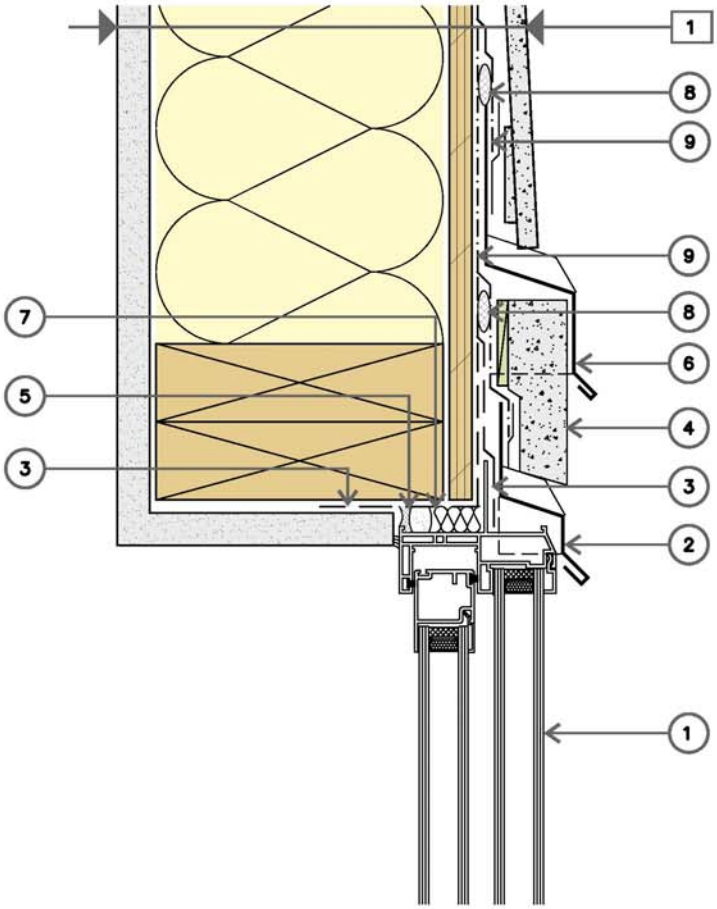

LEGEND

1 Wall Assembly
- Cladding
- Vapor permeable WRB
- Sheathing
- Wood framing with batt insulation
- Vapor retarder
- Gypsum board

1. Window assembly
2. Pre-finished metal flashing w/end dams
3. Foil-faced self-adhered membrane
4. Trim on vertical strapping (p.t.)
5. Backer rod & sealant
6. Pre-finished metal head flashing w/end dams
7. Semi-rigid insulation
8. A/B Sealant
9. Vapor permeable WRB lapped over and taped to flashing

WINDOW HEAD - REPLACEMENT | DETAIL WD1.2 1

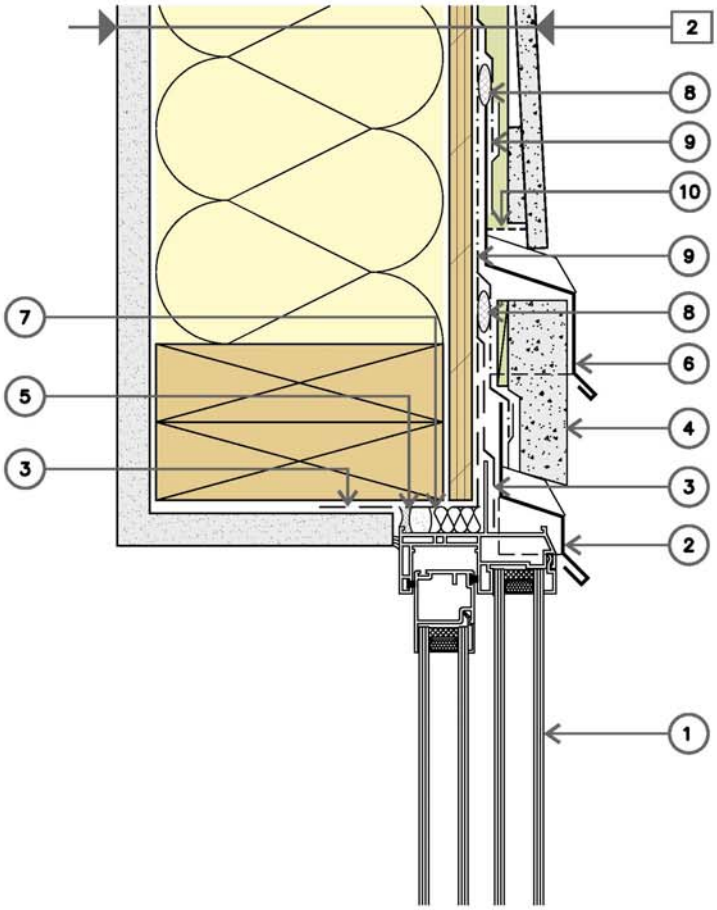

LEGEND

2 Wall Assembly
- Cladding
- Wood strapping (p.t.)
- Vapor permeable WRB
- Sheathing
- Wood framing with batt insulation
- Vapor retarder
- Gypsum board

1. Window assembly
2. Pre-finished metal flashing w/end dams
3. Foil-faced self-adhered membrane
4. Trim on vertical strapping (p.t.)
5. Backer rod & sealant
6. Pre-finished metal head flashing w/end dams
7. Semi-rigid insulation
8. A/B Sealant
9. Vapor permeable WRB lapped over and taped to flashing
10. Insect screen

WINDOW HEAD - REPLACEMENT | DETAIL WD1.2 2

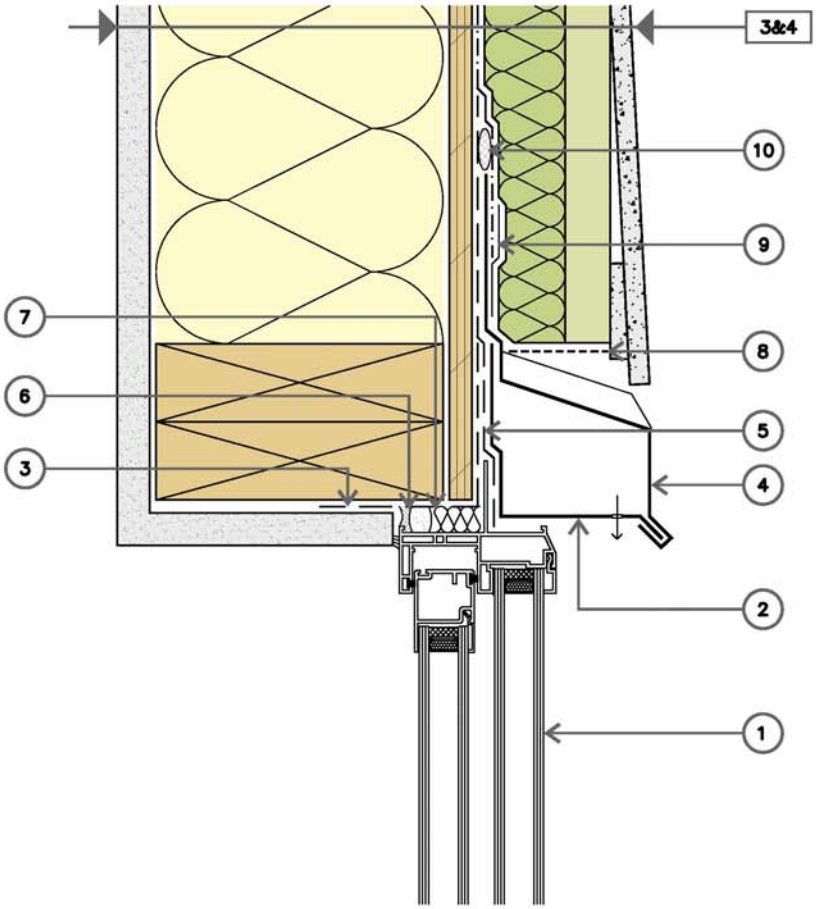

LEGEND

3&4 Wall Assembly
- Cladding
- Wood strapping (p.t.)
- Semi rigid insulation
- Vapor permeable WRB
- Sheathing
- Wood framing with batt insulation
- Vapor retarder
- Gypsum board

1. Window assembly
2. Pre-finished metal closure flashing
3. Foil-faced self-adhered membrane
4. Pre-finished metal head flashing w/ weeps & w/end dams
5. Self-adhered membrane
6. Backer rod & sealant
7. Insulation
8. Insect screen
9. Vapor permeable WRB lapped over and taped to flashing
10. A/B sealant

WINDOW HEAD - REPLACEMENT | DETAIL WD1.2 3&4

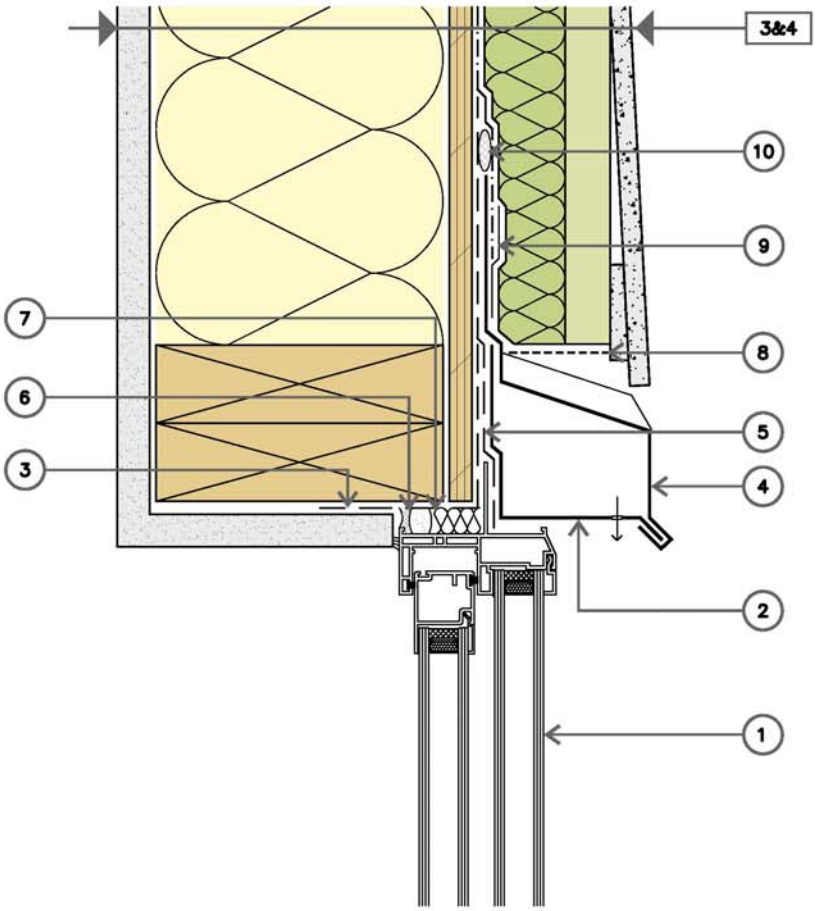

LEGEND

3&4 Wall Assembly
- Cladding
- Wood strapping (p.t.)
- Semi rigid insulation
- Vapor permeable WRB
- Sheathing
- Wood framing with batt insulation
- Vapor retarder
- Gypsum board

1. Window assembly
2. Pre-finished metal closure flashing
3. Foil-faced self-adhered membrane
4. Pre-finished metal head flashing w/ weeps & w/end dams
5. Self-adhered membrane
6. Backer rod & sealant
7. Insulation
8. Insect screen
9. Vapor permeable WRB lapped over and taped to flashing
10. A/B sealant

WINDOW HEAD - REPLACEMENT | DETAIL WD1.2 3&4

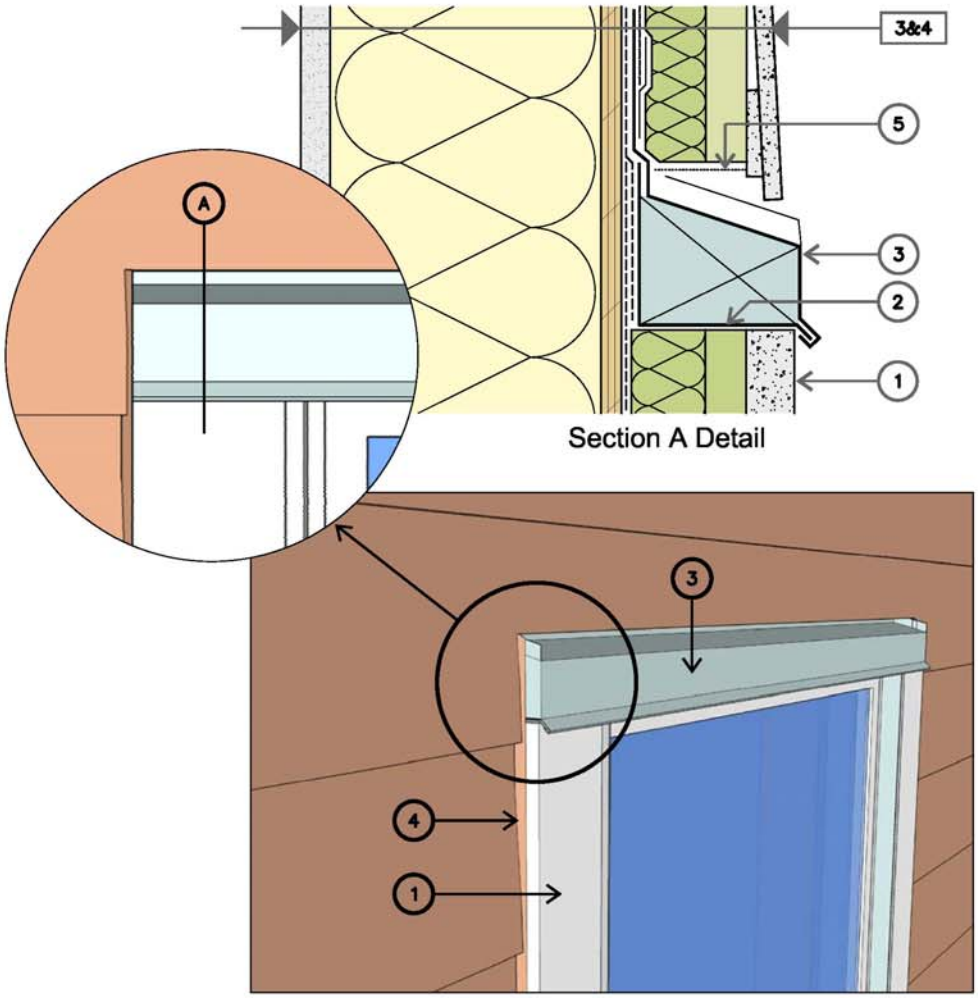

LEGEND

3&4 Wall Assembly
- Cladding
- Wood strapping (p.t.)
- Semi rigid insulation
- Vapor permeable WRB
- Sheathing
- Wood framing with batt insulation
- Vapor retarder
- Gypsum board

1. Jamb trim
2. Pre-finished metal closure flashing
3. Pre-finished metal head flashing & w/end dams & end closure
4. Sealant
5. Insect screen

HEAD & JAMB TRIM INTERFACE | DETAIL WD1.3 3&4

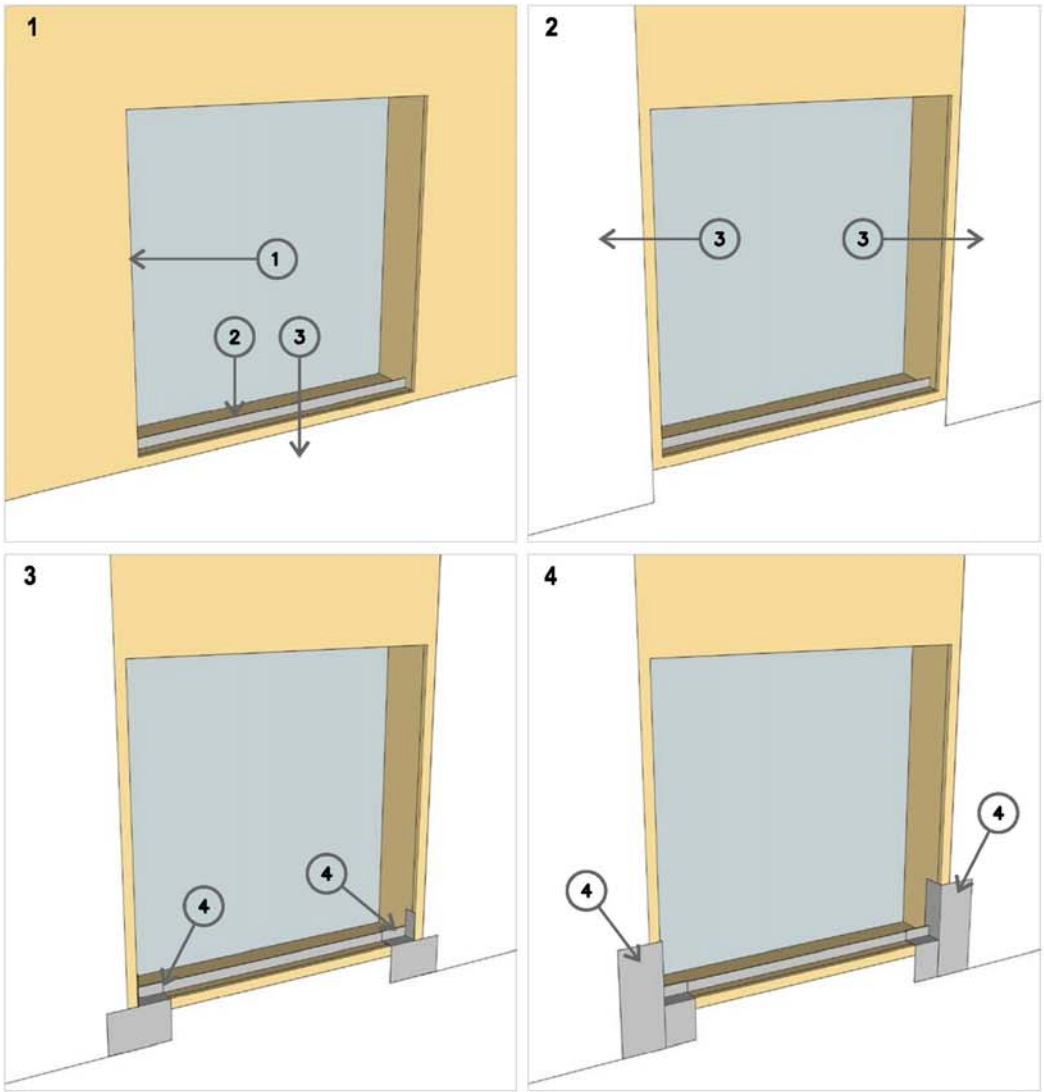

LEGEND

1. Wall framing and sheathing
2. Metal back-dam angle
3. Vapor permeable WRB
4. Foil-faced self-adhered membrane
5. Sealant
6. Window
7. Self-adhered membrane
8. Pre-finished metal head flashing w/ weeps & w/end dams
9. Pre-finished metal closure flashing
10. Semi rigid insulation
11. Wood strapping (p.t.)
12. Insect screen
13. Cladding
14. Trim
15. Pre-finished metal sill flashing w/end dams on shims

WINDOW SEQUENCE | DETAIL WD1.4-A 3&4

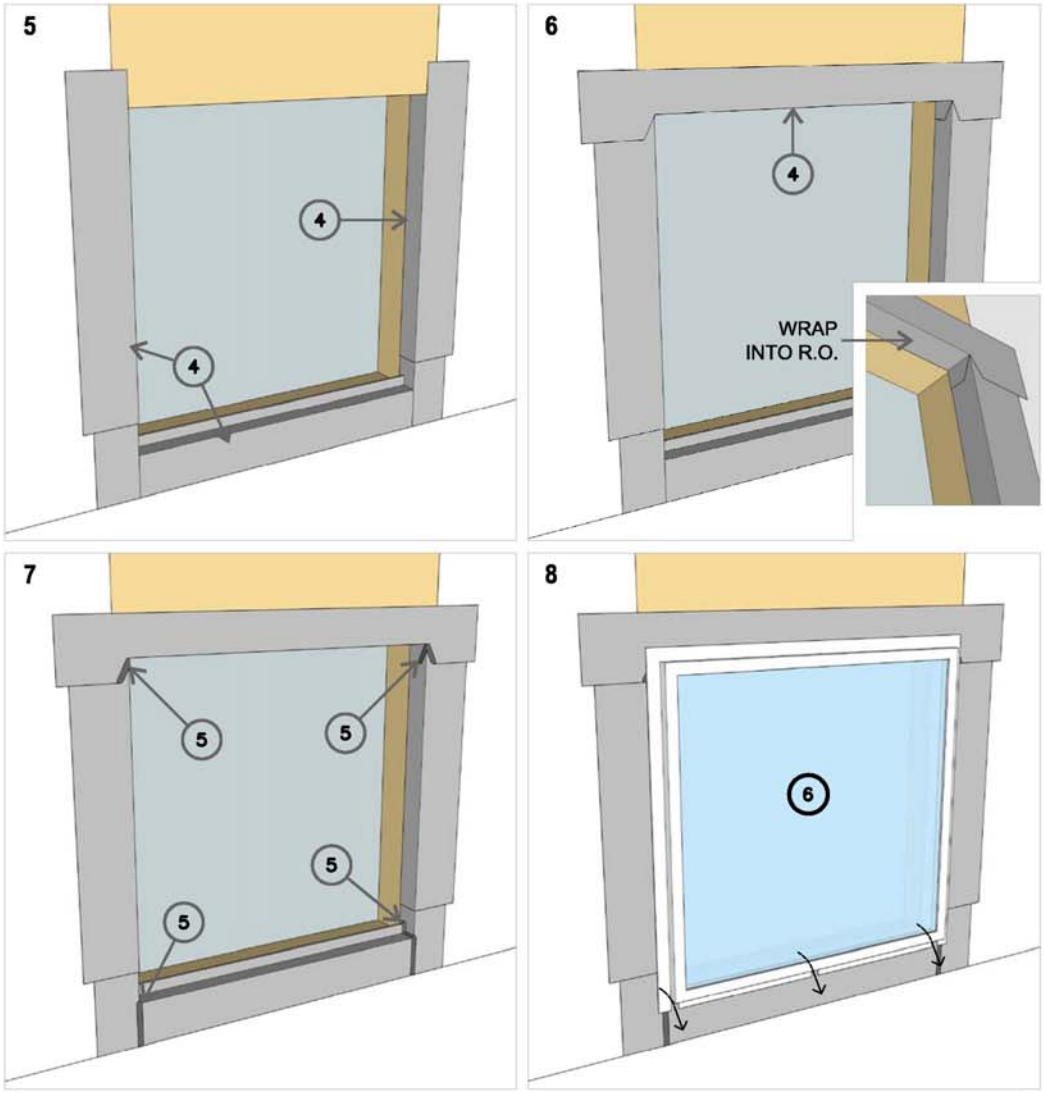

LEGEND

1. Wall framing and sheathing
2. Metal back-dam angle
3. Vapor permeable WRB
4. Foil-faced self-adhered membrane
5. Sealant
6. Window assembly - notch sill flange, or provide alternate means for drainage
7. Self-adhered membrane
8. Pre-finished metal head flashing w/ weeps & w/end dams
9. Pre-finished metal closure flashing
10. Semi rigid insulation
11. Wood strapping (p.t.)
12. Insect screen
13. Cladding
14. Trim
15. Pre-finished metal sill flashing w/end dams on shims

WINDOW SEQUENCE | DETAIL WD1.4-B 3&4

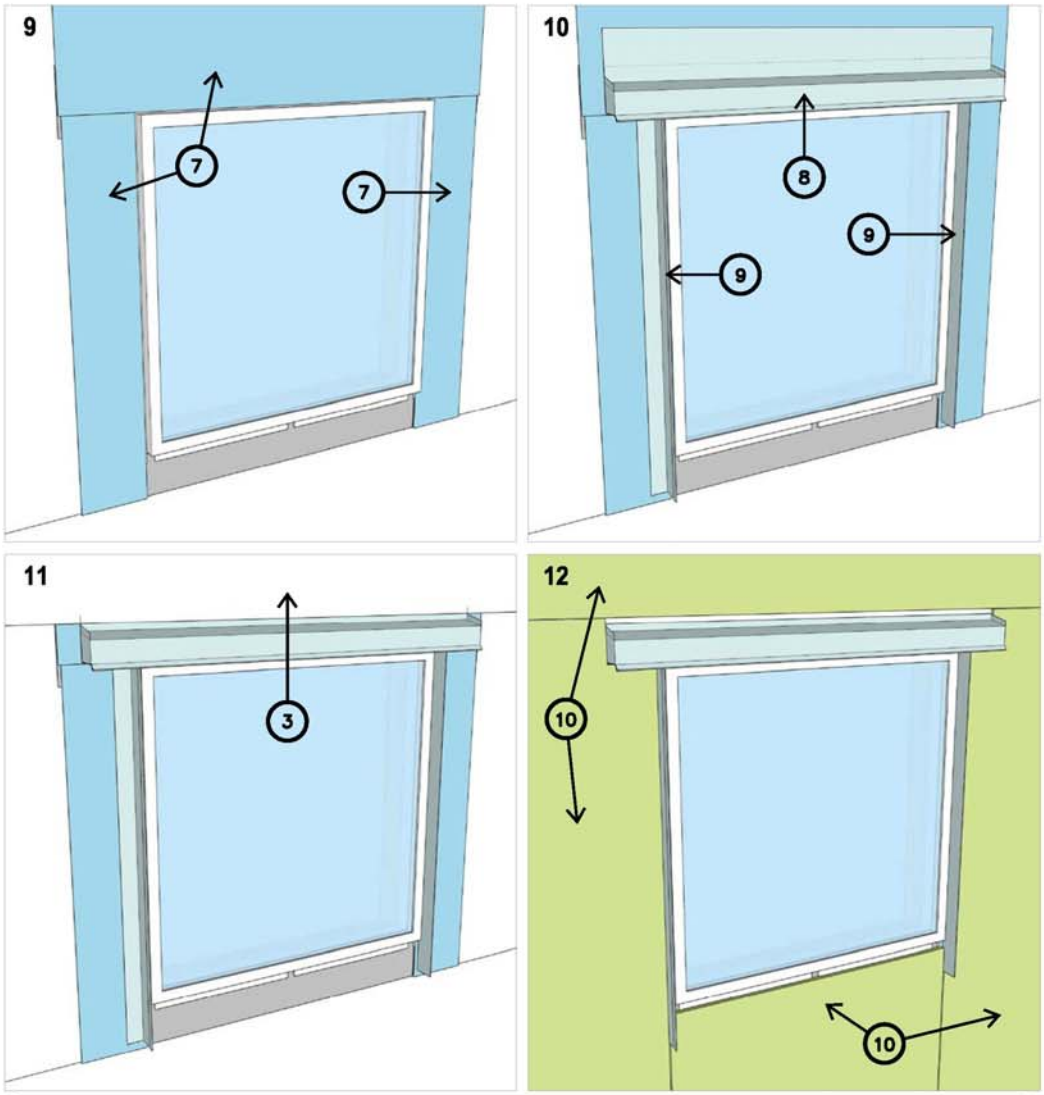

LEGEND

1. Wall framing and sheathing
2. Metal back-dam angle
3. Vapor permeable WRB
4. Foil-faced self-adhered membrane
5. Sealant
6. Window
7. Self-adhered membrane
8. Pre-finished metal head flashing w/ weeps & w/end dams
9. Pre-finished metal closure flashing
10. Semi rigid insulation
11. Wood strapping (p.t.)
12. Insect screen
13. Cladding
14. Trim
15. Pre-finished metal sill flashing w/end dams on shims

WINDOW SEQUENCE | DETAIL WD1.4-C 3&4

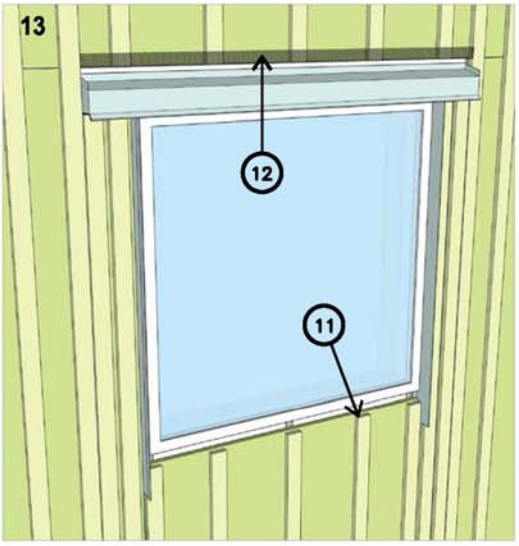

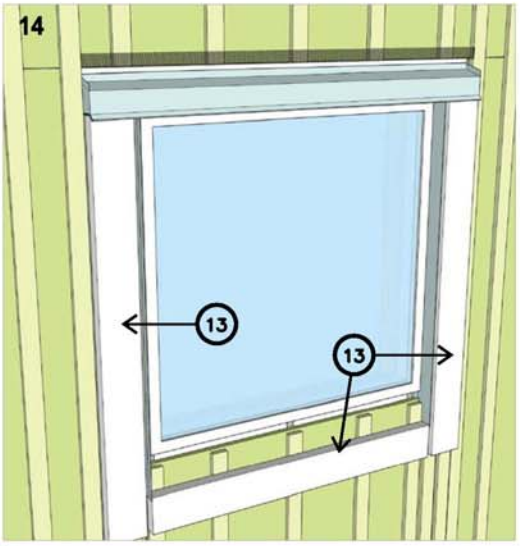

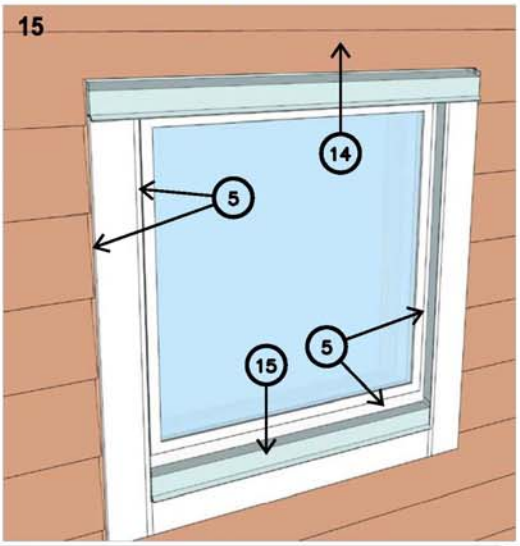

LEGEND

1. Wall framing and sheathing
2. Metal back-dam angle
3. Vapor permeable WRB
4. Foil-faced self-adhered membrane
5. Sealant
6. Window
7. Self-adhered membrane
8. Pre-finished metal head flashing w/ weeps & w/end dams
9. Pre-finished metal closure flashing
10. Semi rigid insulation
11. Wood strapping (p.t.)
12. Insect screen
13. Trim
14. Cladding
15. Pre-finished metal sill flashing w/end dams on shims

WINDOW SEQUENCE | DETAIL WD1.4-D 3&4

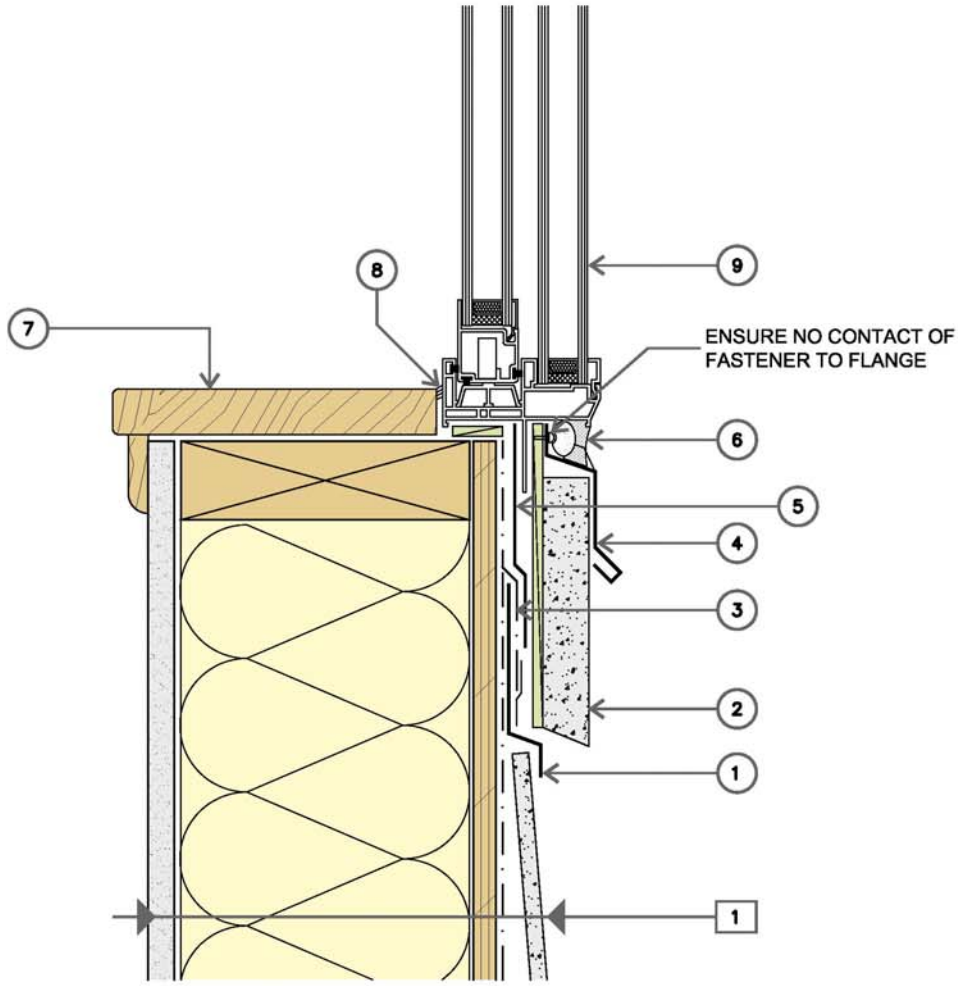

LEGEND

1 Wall Assembly
- Cladding
- Vapor permeable WRB
- Sheathing
- Wood framing with batt insulation
- Vapor retarder
- Gypsum board

1. Pre-finished metal z-flashing
2. Trim on vertical strapping (p.t.)
3. Existing WRB
4. Pre-finished metal flashing w/end dams
5. Roll-stock metal flashing lapped over z-flashing
6. Backer rod & sealant
7. Interior window trim
8. Sealant
9. Window assembly

WINDOW SILL - IN SITU | DETAIL WD2.1 1

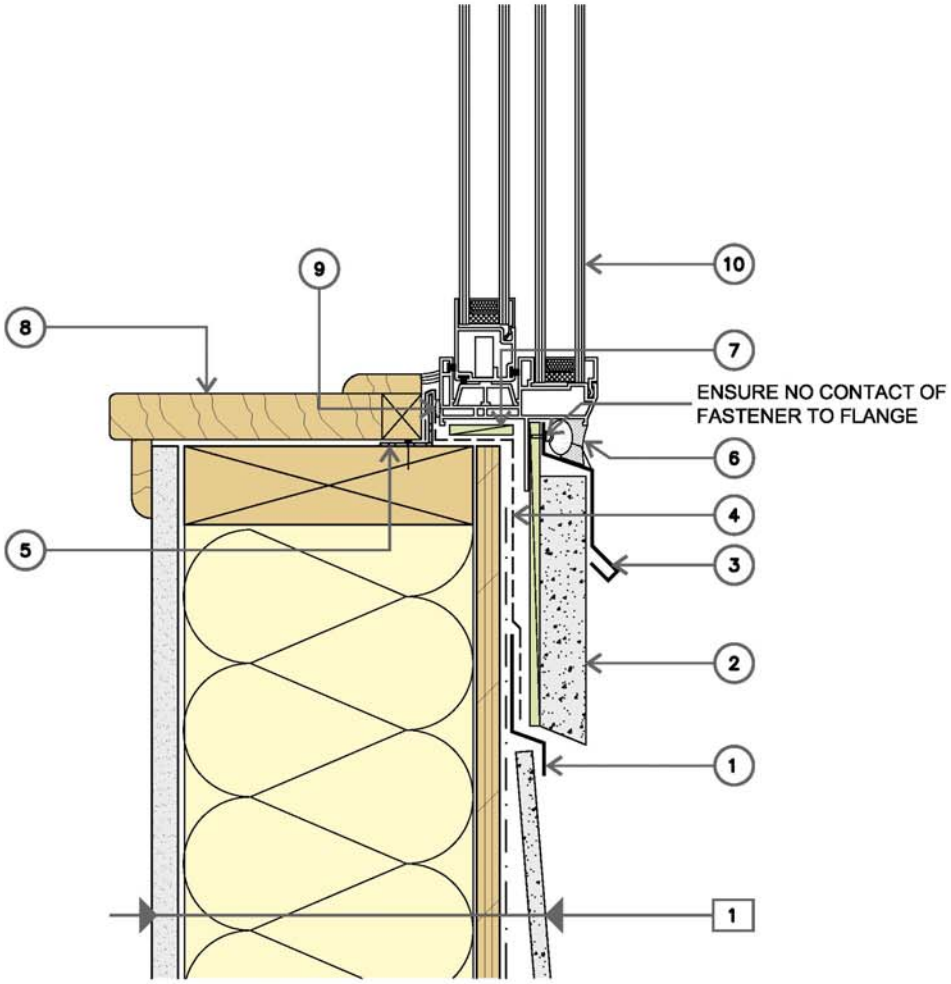

LEGEND

1 Wall Assembly
- Cladding
- Vapor permeable WRB
- Sheathing
- Wood framing with batt insulation
- Vapor retarder
- Gypsum board

1. Pre-finished metal z-flashing
2. Trim on vertical strapping (p.t.)
3. Pre-finished metal flashing w/end dams
4. Foil-faced self-adhered membrane w/ sealed lap joints on sill
5. Metal back-dam angle
6. Backer rod & sealant
7. Intermittent shim
8. Interior window trim
9. Sealant
10. Window assembly - notch sill flange, or provide alternate means for drainage

WINDOW SILL - REPLACEMENT | DETAIL WD2.2 1

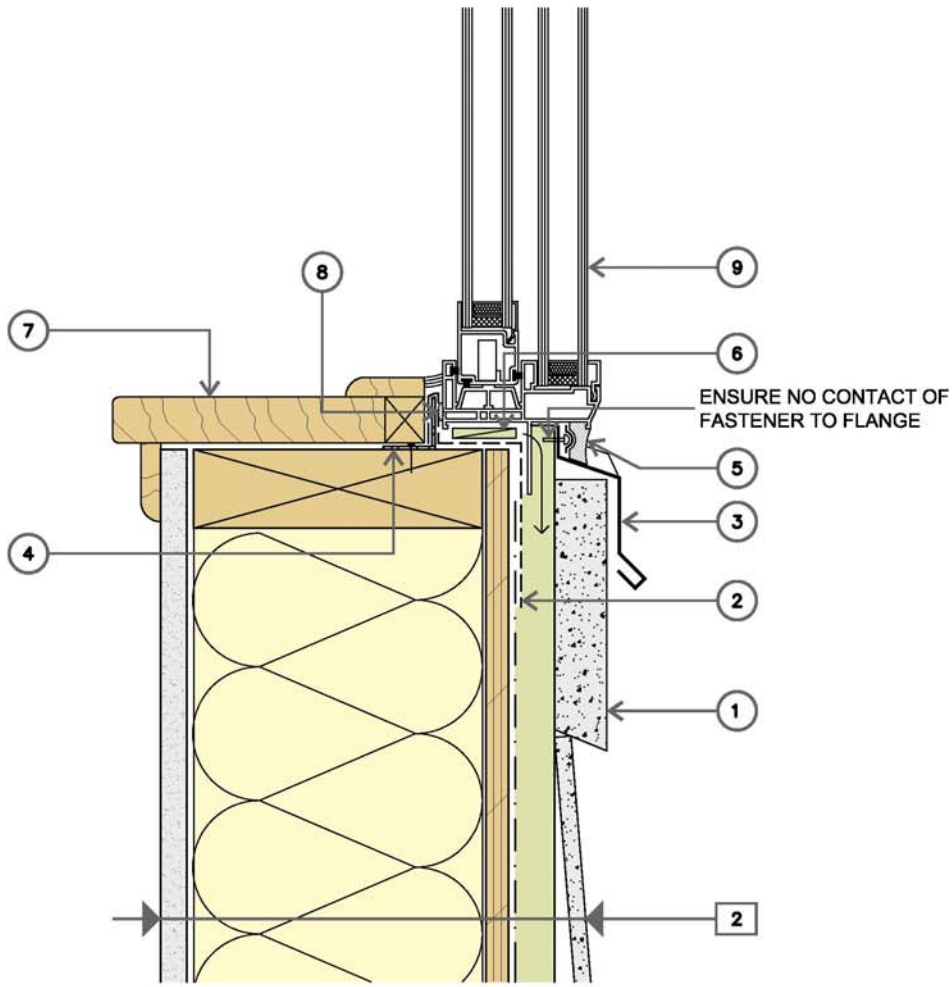

LEGEND

[2] Wall Assembly
- Cladding
- Wood strapping (p.t.)
- Vapor permeable WRB
- Sheathing
- Wood framing with batt insulation
- Vapor retarder
- Gypsum board

1. Trim
2. Foil-faced self-adhered membrane w/ sealed lap joints on sill
3. Pre-finished metal flashing w/end dams
4. Metal back-dam angle
5. Release tape & sealant
6. Intermittent shim
7. Interior window trim
8. Sealant
9. Window assembly - notch sill flange, or provide alternate means for drainage

WINDOW SILL - REPLACEMENT | DETAIL WD2.2 [2]

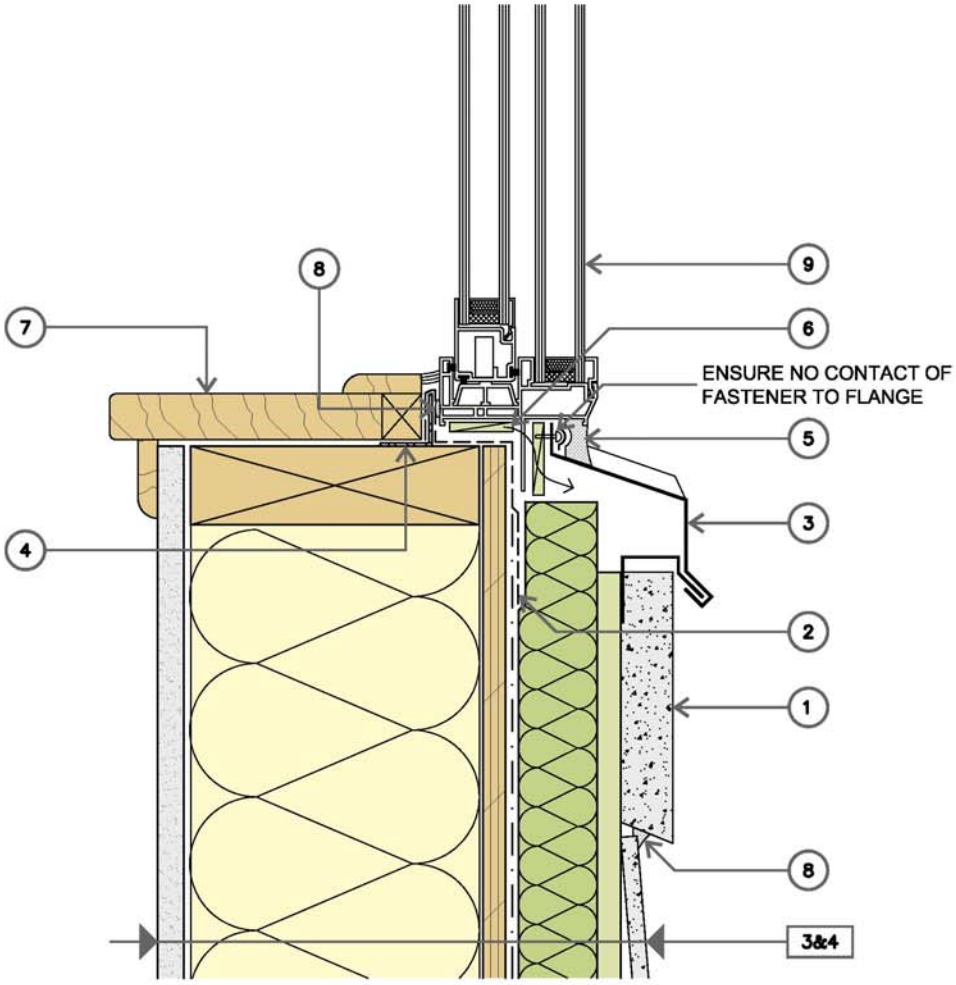

LEGEND

3&4 Wall Assembly
- Cladding
- Wood strapping (p.t.)
- Semi rigid insulation
- Vapor permeable WRB
- Sheathing
- Wood framing with batt insulation
- Vapor retarder
- Gypsum board

1. Trim
2. Foil-faced self-adhered membrane w/ sealed lap joints on sill
3. Pre-finished metal flashing w/end dams
4. Metal back-dam angle
5. Release tape & sealant
6. Intermittent shim
7. Interior window trim
8. Sealant
9. Window assembly - notch sill flange, or provide alternate means for drainage

WINDOW SILL - RELACEMENT | DETAIL WD2.2 3&4

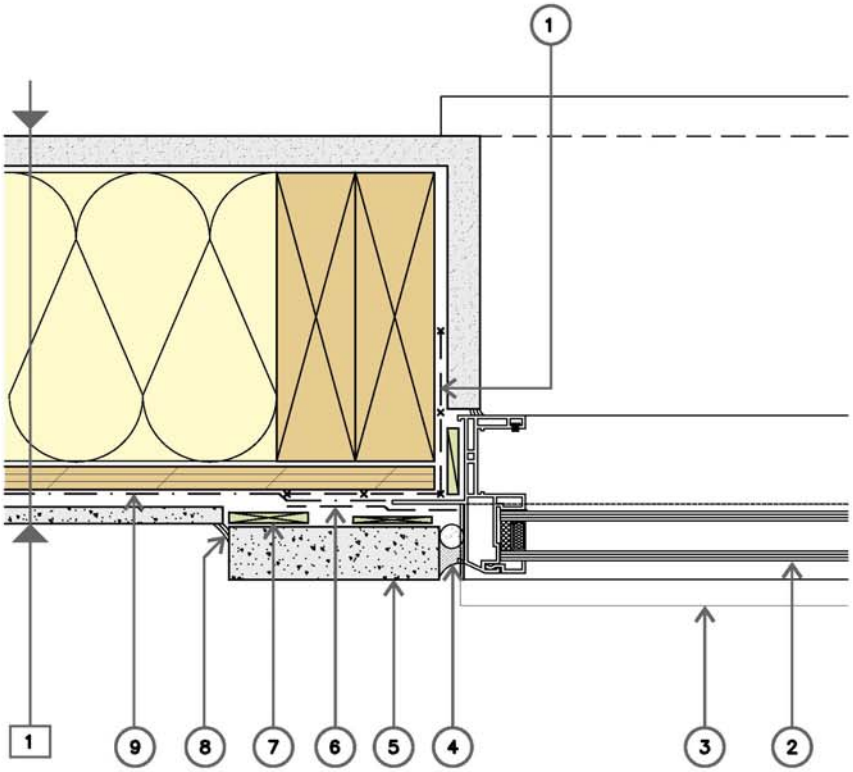

LEGEND

1 Wall Assembly
- Cladding
- Vapor permeable WRB
- Sheathing
- Wood framing with batt insulation
- Vapor retarder
- Gypsum board

1. Existing membrane flashing
2. Window assembly
3. Pre-finished metal sill flashing below
4. Backer rod & sealant
5. Trim
6. Self-adhered membrane
7. Wood strapping (p.t.)
8. Sealant
9. Vapor permeable WRB - stop WRB at flange edge

WINDOW JAMB - IN SITU | DETAIL WD4.1 1

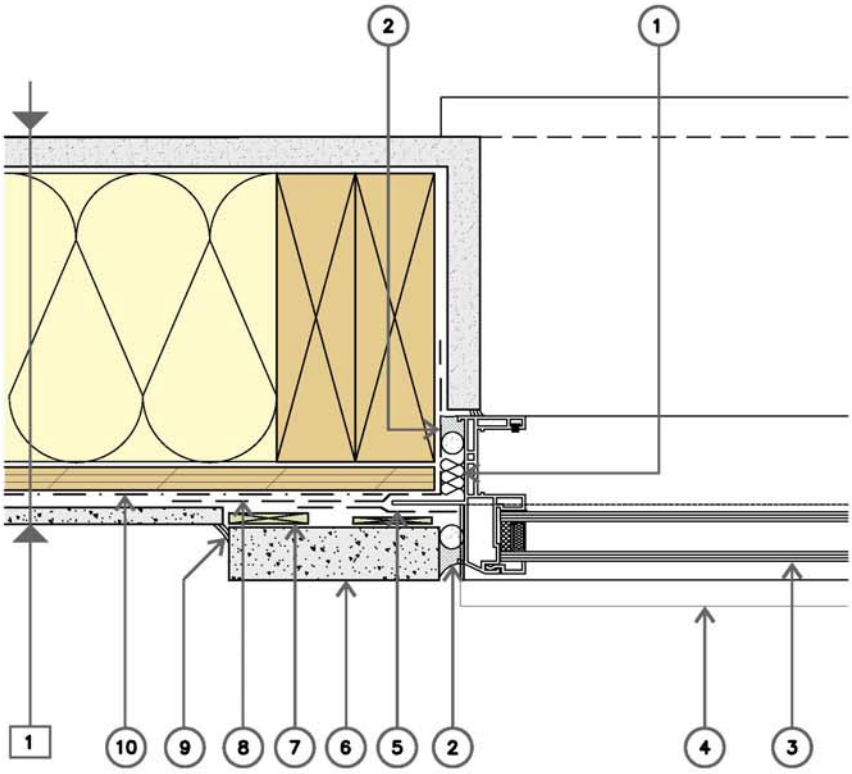

LEGEND

1 Wall Assembly
- Cladding
- Vapor permeable WRB
- Sheathing
- Wood framing with batt insulation
- Vapor retarder
- Gypsum board

1. Insulation
2. Backer rod & sealant
3. Window assembly
4. Pre-finished metal sill flashing below
5. Self-adhered membrane
6. Trim
7. Wood strapping (p.t.)
8. Foil-faced self-adhered membrane
9. Sealant
10. Vapor permeable WRB

WINDOW JAMB - REPLACEMENT | DETAIL WD4.2 1

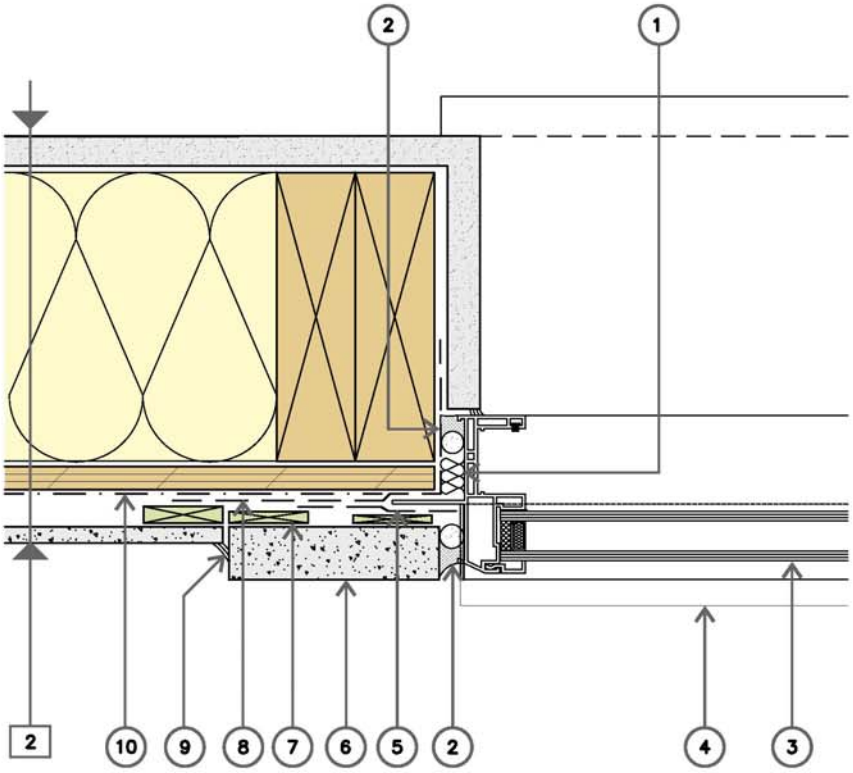

LEGEND

2 Wall Assembly
- Cladding
- Wood strapping (p.t.)
- Vapor permeable WRB
- Sheathing
- Wood framing with batt insulation
- Vapor retarder
- Gypsum board

1. Insulation
2. Backer rod & sealant
3. Window assembly
4. Pre-finished metal sill flashing below
5. Self-adhered membrane
6. Trim
7. Wood strapping (p.t.)
8. Foil-faced self-adhered membrane
9. Sealant
10. Vapor permeable WRB

WINDOW JAMB - REPLACEMENT | DETAIL WD4.2 2

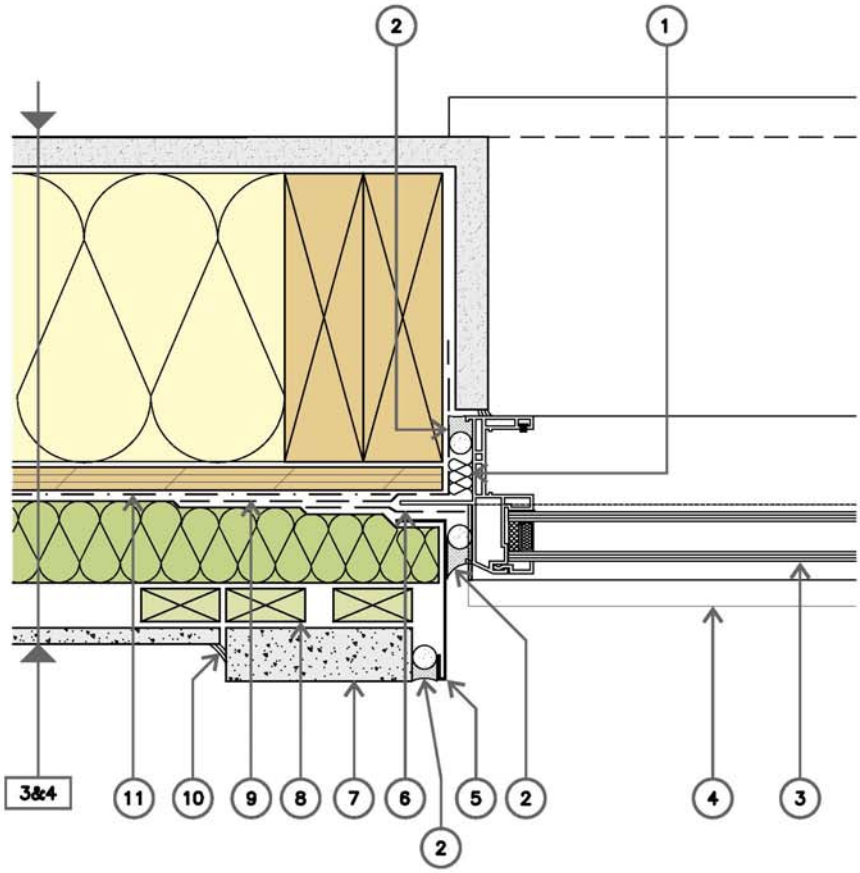

LEGEND

3&4 Wall Assembly
- Cladding
- Wood strapping (p.t.)
- Semi rigid insulation
- Vapor permeable WRB
- Sheathing
- Wood framing with batt insulation
- Vapor retarder
- Gypsum board

1. Insulation
2. Backer rod & sealant
3. Window assembly
4. Pre-finished metal sill flashing below
5. Pre-finished metal closure flashing
6. Self-adhered membrane
7. Trim
8. Wood strapping (p.t.)
9. Foil-faced self-adhered membrane
10. Sealant
11. Vapor permeable WRB

WINDOW JAMB - REPLACEMENT | DETAIL WD4.2 3&4

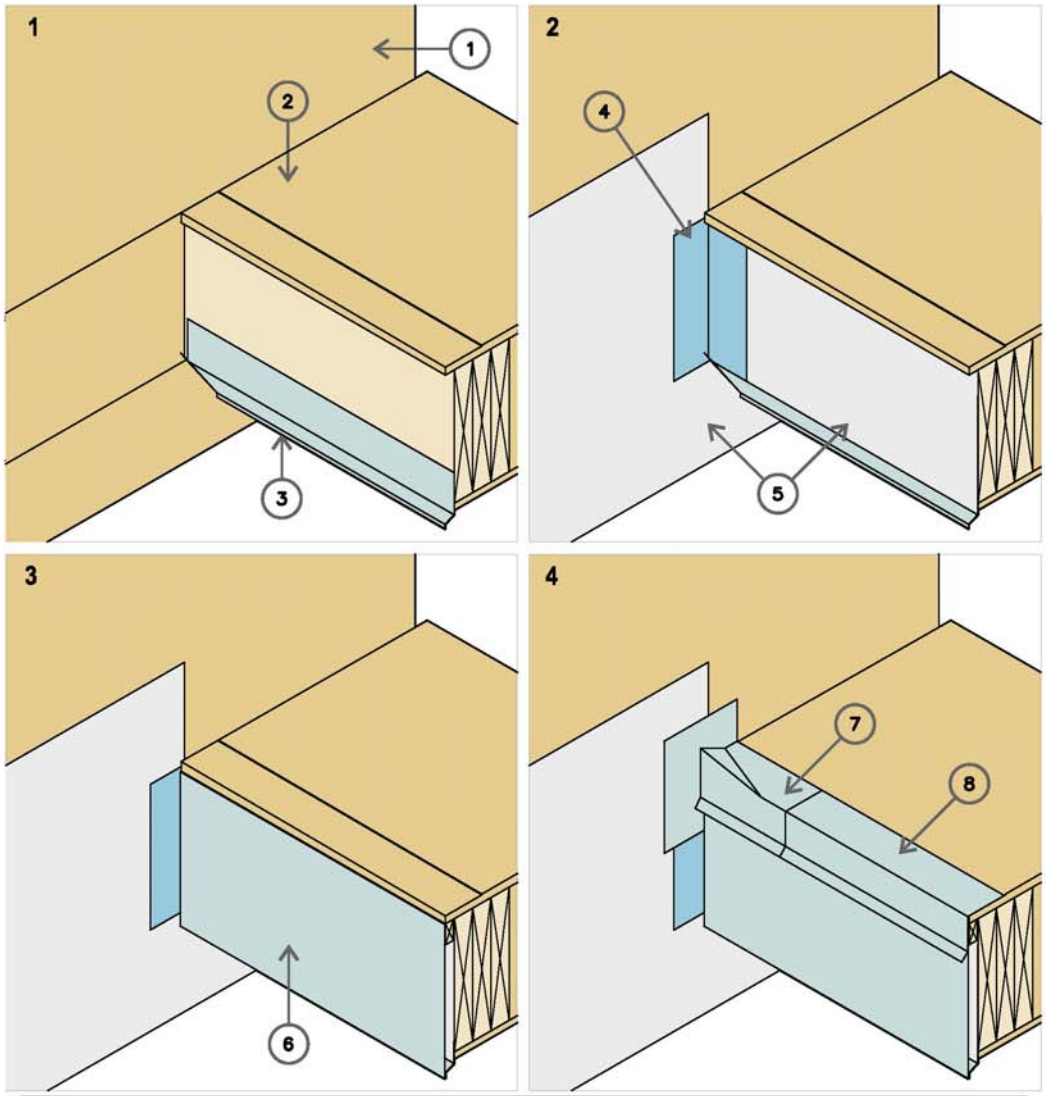

LEGEND

1. Wall framing and sheathing
2. Balcony framing and sheathing
3. Metal flashing
4. Self-adhered membrane
5. Vapor permeable WRB
6. Metal facia
7. Metal cricket saddle flashing
8. Metal edge flashing
9. Deck membrane - Reinforce @ transitions Sheet metal "L" transitions are often requried at deck/wall interface
10. Pre-finished Metal base of wall / cross cavity flashing
11. Cladding
12. Sealant

BALCONY TO WALL SEQUENCE | DETAIL BD1-A 1

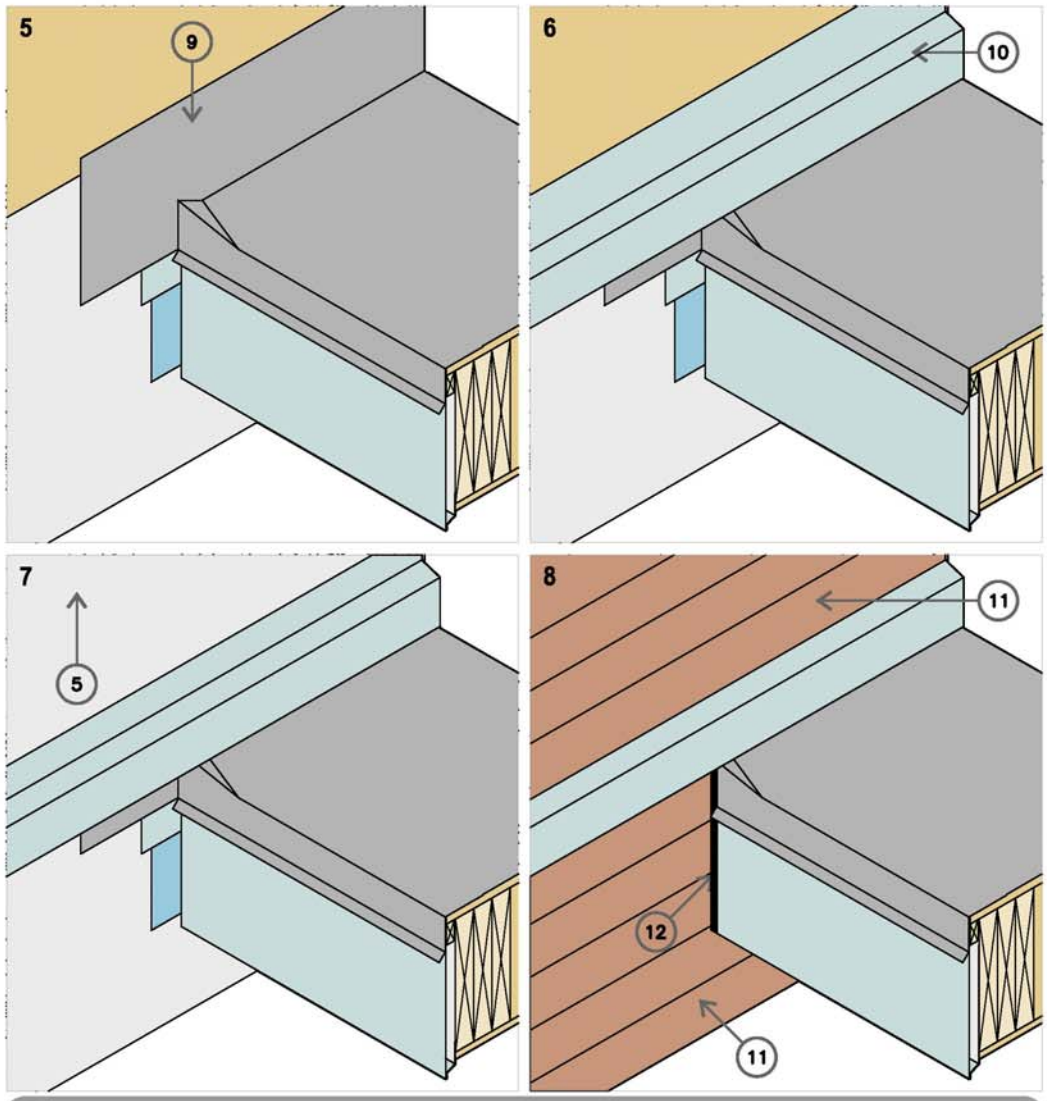

LEGEND

1. Wall framing and sheathing
2. Balcony framing and sheathing
3. Metal flashing
4. Self-adhered membrane
5. Vapor permeable WRB
6. Metal facia
7. Metal cricket saddle flashing
8. Metal edge flashing
9. Deck membrane - Reinforce @ transitions Sheet metal "L" transitions are often requried at deck/wall interface
10. Pre-finished Metal base of wall / cross cavity flashing
11. Cladding
12. Sealant

BALCONY TO WALL SEQUENCE | DETAIL BD1-B 1

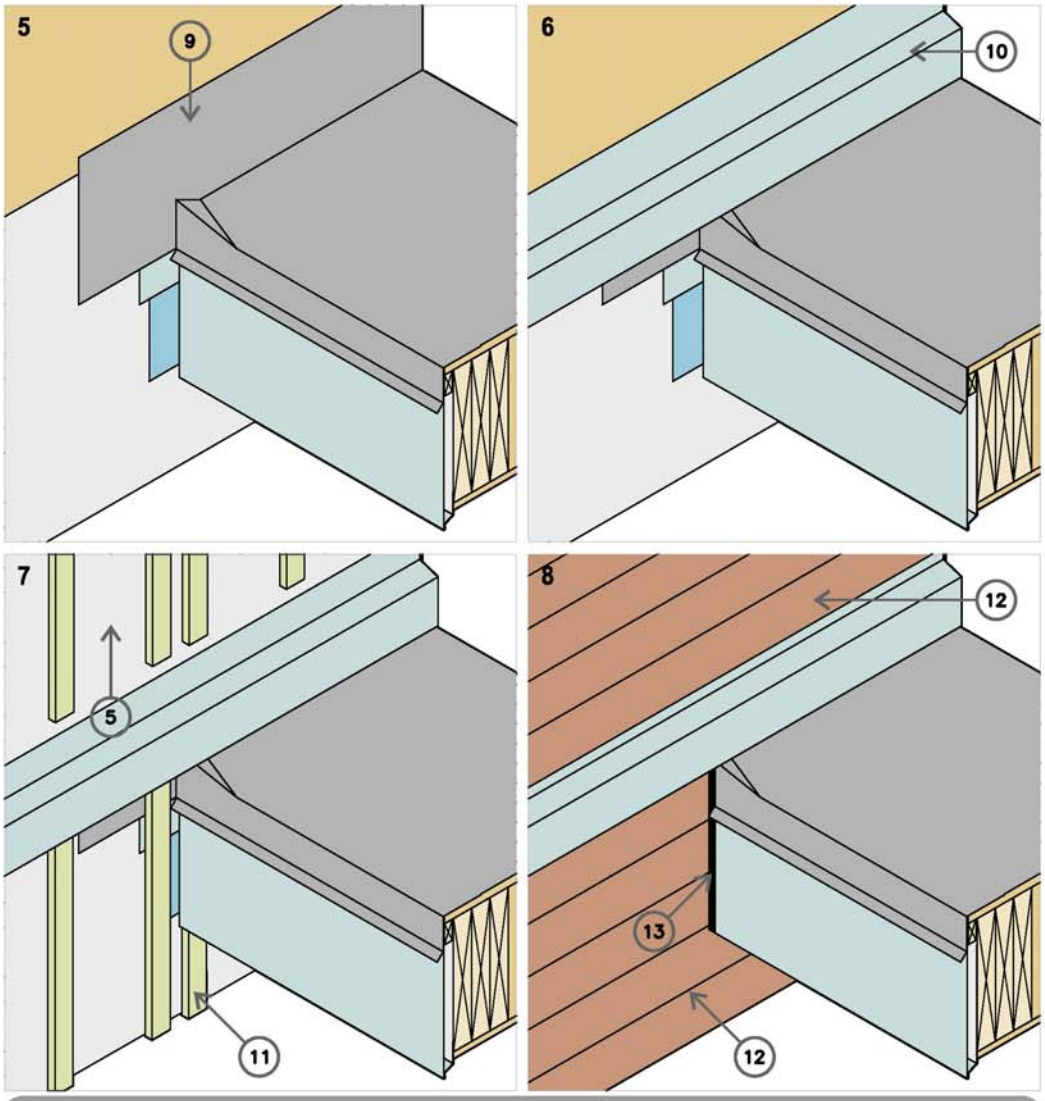

LEGEND

1. Wall framing and sheathing
2. Balcony framing and sheathing
3. Metal flashing
4. Self-adhered membrane
5. Vapor permeable WRB
6. Metal facia
7. Metal cricket saddle flashing
8. Metal edge flashing
9. Deck membrane - Reinforce @ transitions Sheet metal "L" transitions are often requried at deck/wall interface
10. Pre-finished Metal base of wall / cross cavity flashing
11. Wood strapping (p.t.)
12. Cladding
13. Sealant

BALCONY TO WALL SEQUENCE | DETAIL BD1-B 2

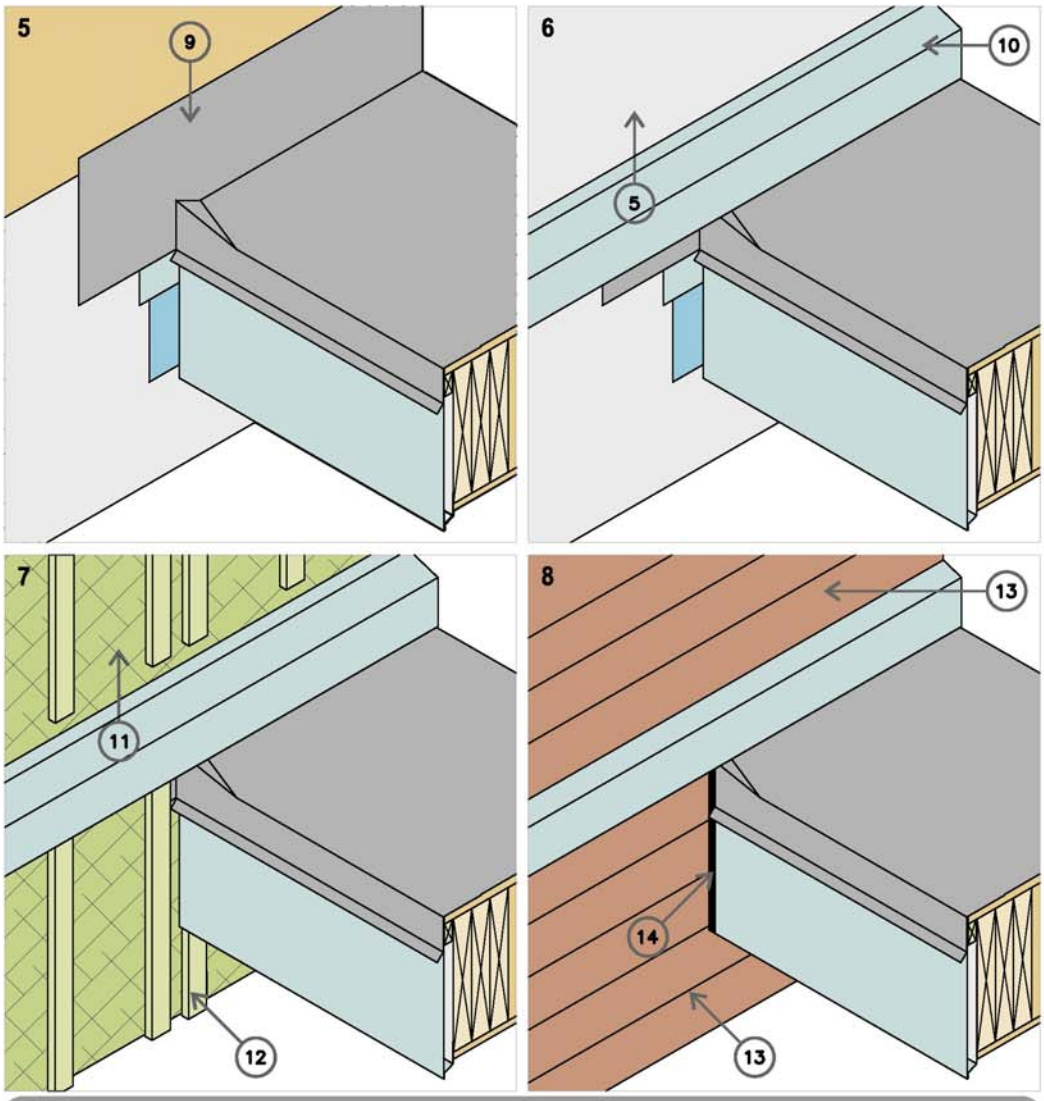

LEGEND

1. Wall framing and sheathing
2. Balcony framing and sheathing
3. Metal flashing
4. Self-adhered membrane
5. Vapor permeable WRB
6. Metal facia
7. Metal cricket saddle flashing
8. Metal edge flashing
9. Deck membrane - Reinforce @ transitions Sheet metal "L" transitions are often requried at deck/wall interface
10. Pre-finished Metal base of wall / cross cavity flashing
11. Semi rigid insulation
12. Wood strapping (p.t.)
13. Cladding
14. Sealant

BALCONY TO WALL SEQUENCE | DETAIL BD1-B 3&4

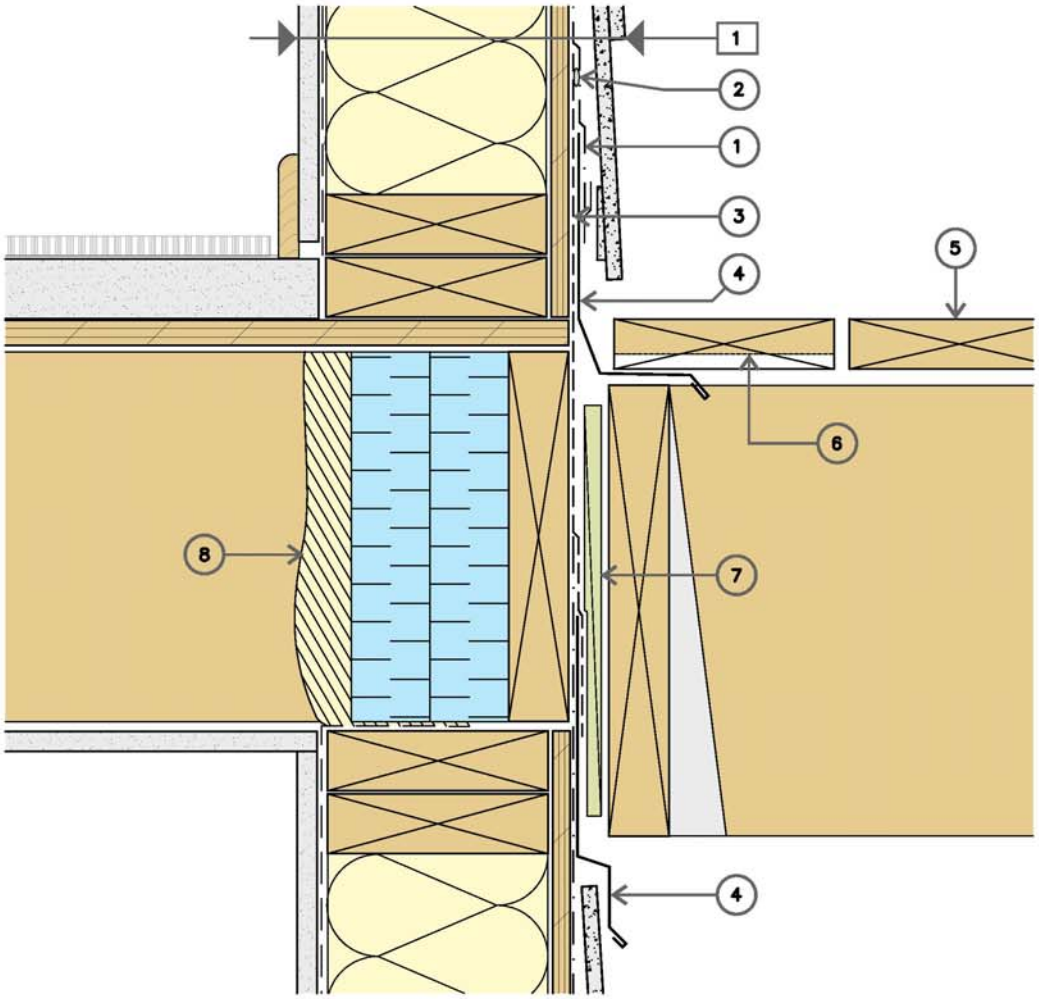

LEGEND

1 Wall Assembly
- Cladding
- Vapor permeable WRB
- Sheathing
- Wood framing with batt insulation
- Vapor retarder
- Gypsum board

1. Vapor permeable WRB
2. A/B Sealant
3. Self-adhered membrane
4. Pre-finished metal flashing
5. Decking
6. Kerf for drainage
7. Intermittent blocking (p.t.)
8. Extruded polystyrene insulation with spray-in-place foam at edges (Value to be considered by consultant on project-specific basis)

BALCONY TO WALL - FLOW THROUGH BALCONY | DETAIL BD3.1 1

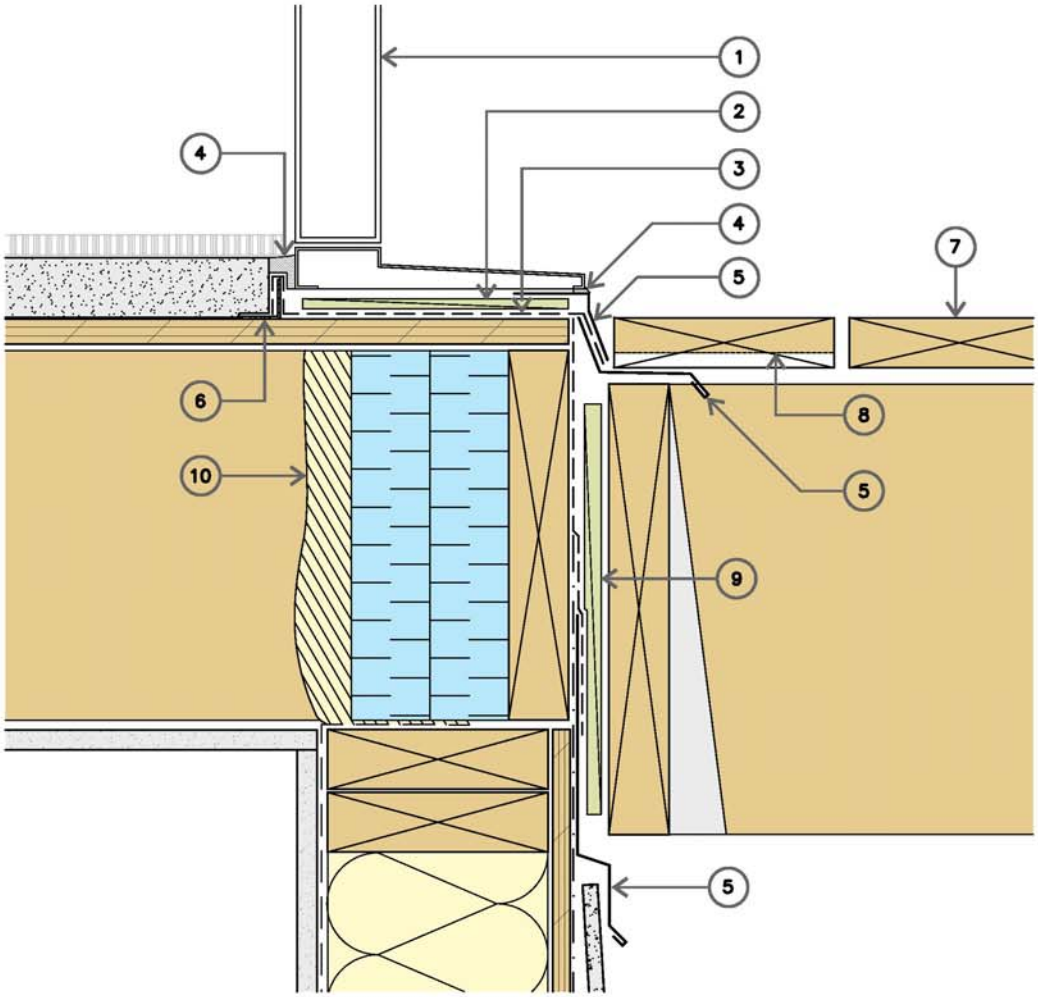

LEGEND

1. Door assembly
2. Intermittent shim
3. Foil-faced self-adhered membrane
4. Sealant
5. Pre-finished metal flashing
6. Metal back-dam angle
7. Decking
8. Kerf for drainage
9. Intermittent blocking (p.t.)
10. Extruded polystyrene insulation with spray-in-place foam at edges (Value to be considered by consultant on project-specific basis)

BALCONY DOOR SILL | DETAIL BD3.2 1

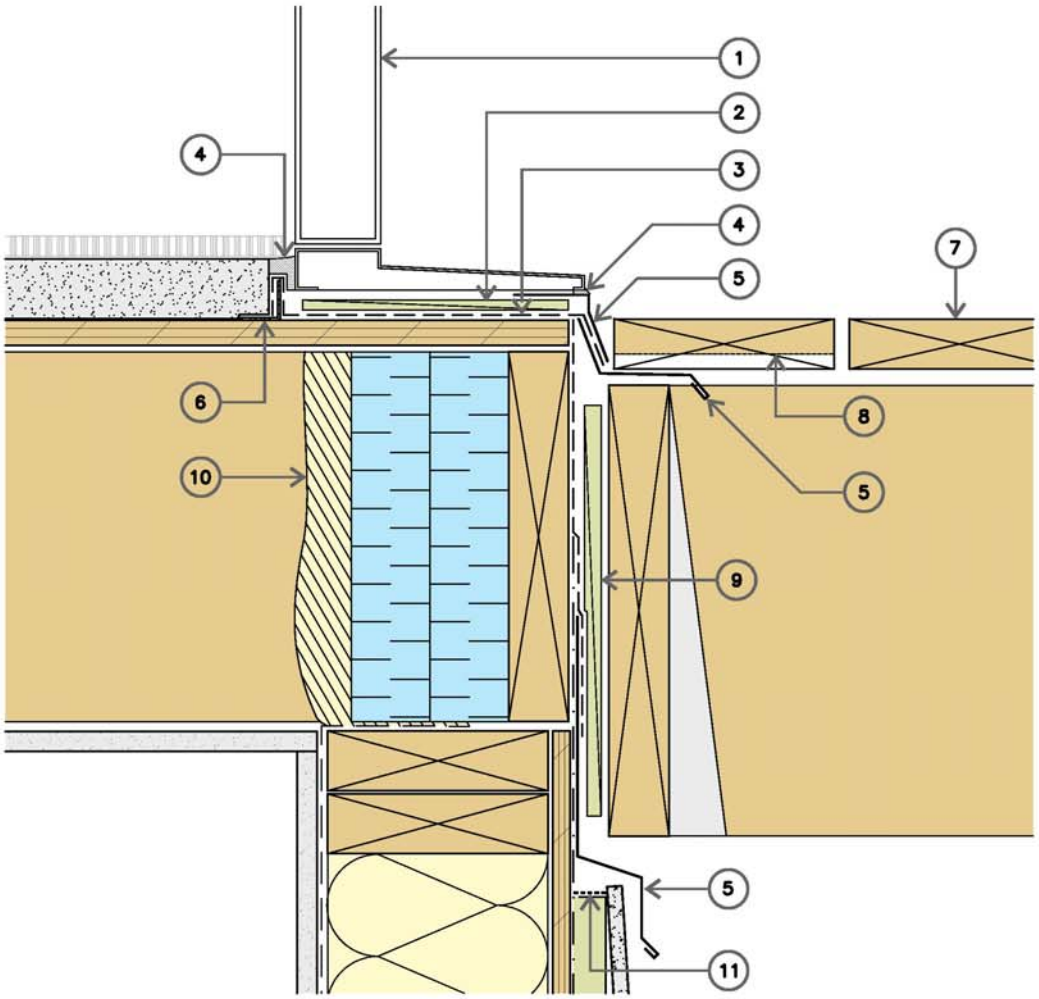

LEGEND

1. Door assembly
2. Intermittent shim
3. Foil-faced self-adhered membrane
4. Sealant
5. Pre-finished metal flashing
6. Metal back-dam angle
7. Decking
8. Kerf for drainage
9. Intermittent blocking (p.t.)
10. Extruded polystyrene insulation with spray-in-place foam at edges (Value to be considered by consultant on project-specific basis)
11. Insect screen

BALCONY DOOR SILL | DETAIL BD3.2 2

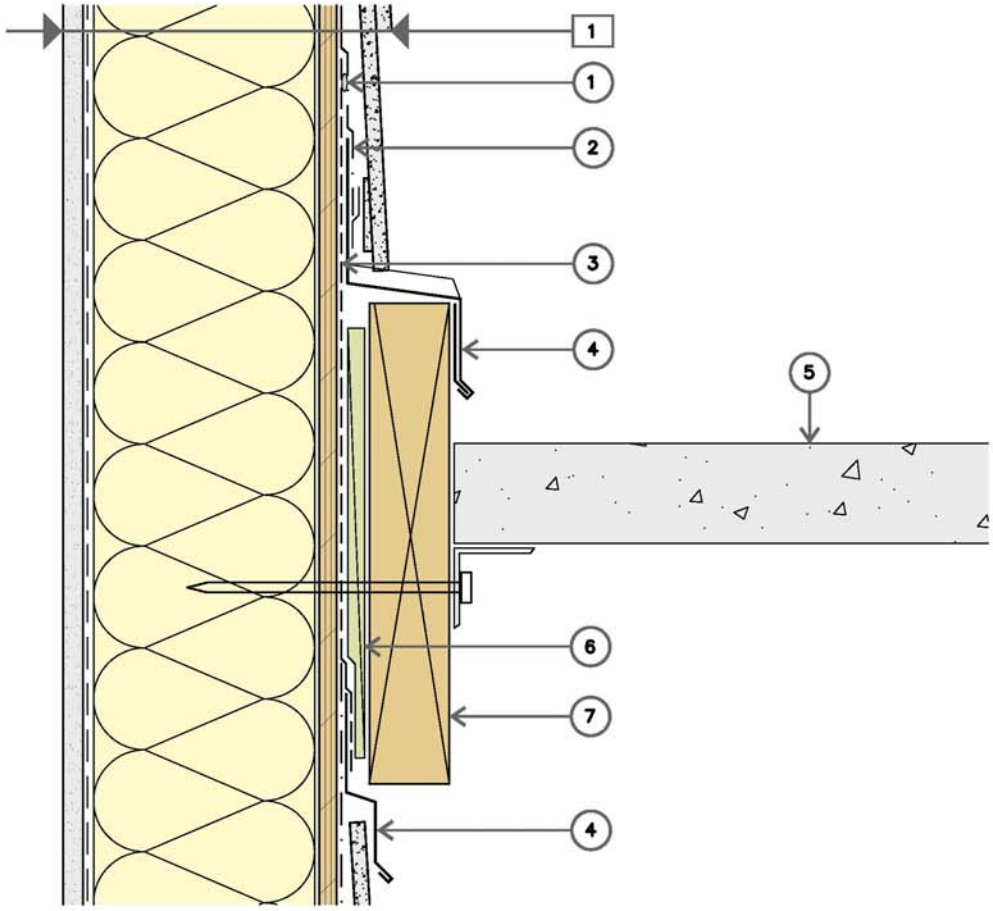

LEGEND

1 Wall Assembly
- Cladding
- Vapor permeable WRB
- Sheathing
- Wood framing with batt insulation
- Vapor retarder
- Gypsum board

1. A/B Sealant
2. Vapor permeable WRB
3. Self-adhered membrane
4. Pre-finished metal flashing
5. Stair tread
6. Intermittent blocking (p.t.)
7. Stair stringer / ledger

STAIR STRINGER/LEDGER | DETAIL BD3.3 1

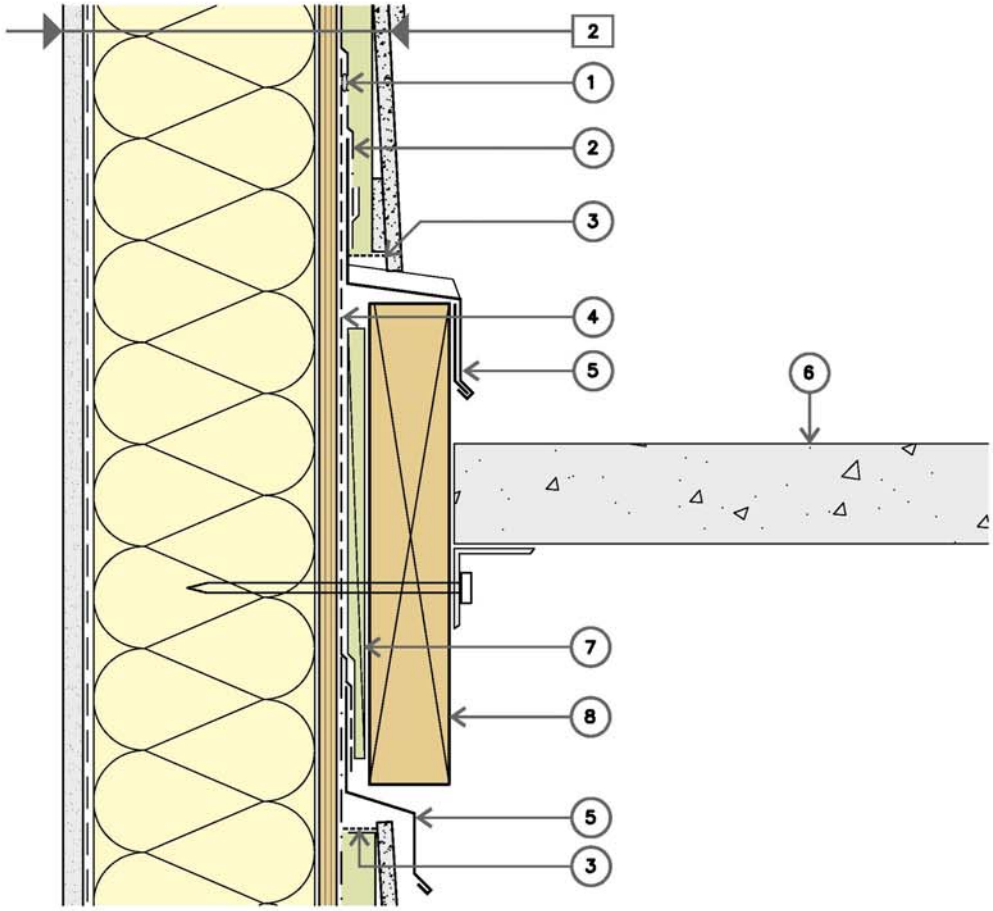

LEGEND

2 Wall Assembly
- Cladding
- Wood strapping (p.t.)
- Vapor permeable WRB
- Sheathing
- Wood framing with batt insulation
- Vapor retarder
- Gypsum board

1. A/B Sealant
2. Vapor permeable WRB
3. Insect screen
4. Self-adhered membrane
5. Pre-finished metal flashing
6. Stair tread
7. Intermittent blocking (p.t.)
8. Stair stringer / ledger

STAIR STRINGER/LEDGER | DETAIL BD3.3 2

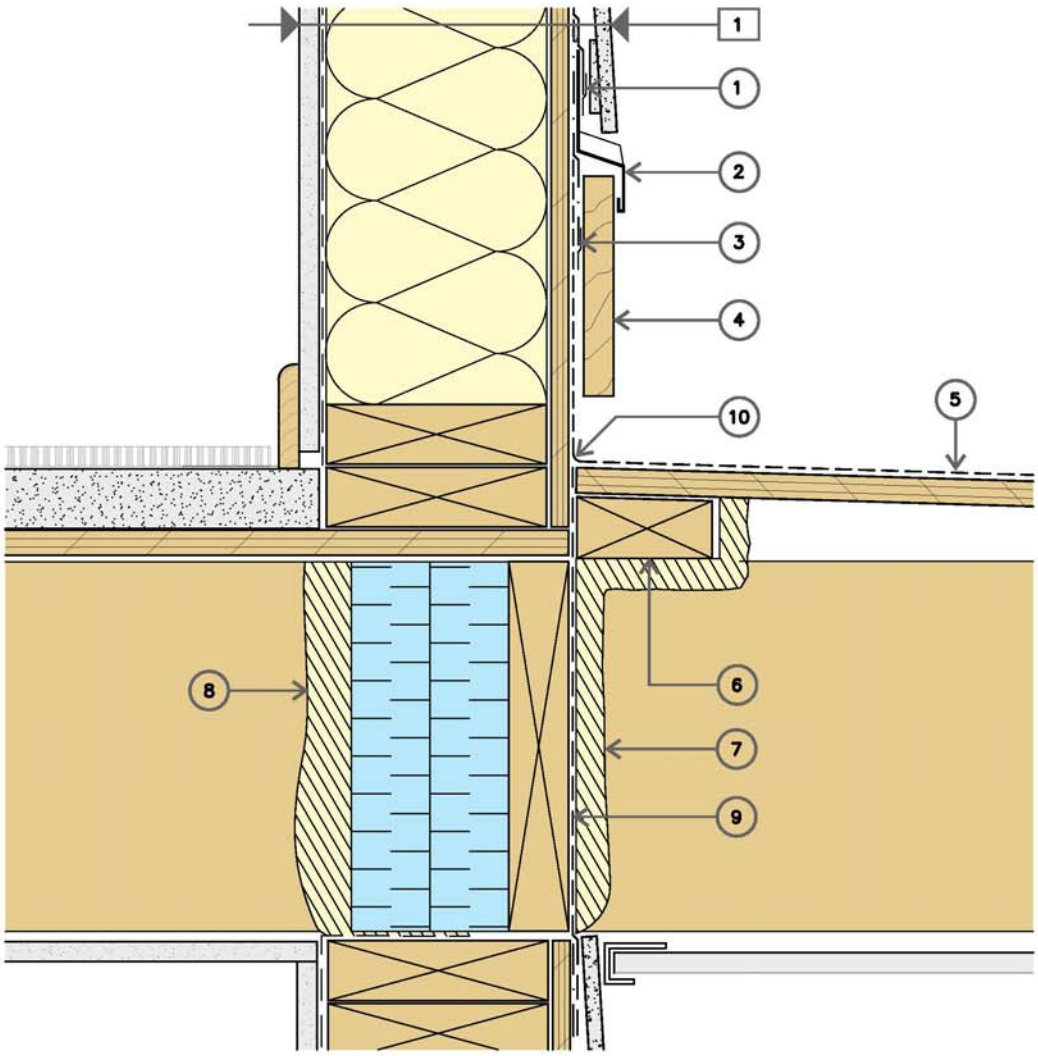

LEGEND

1 Wall Assembly
- Cladding
- Vapour permeable WRB
- Sheathing
- Wood framing with batt insulation
- Vapor retarder
- Gypsum board

1. Vapor permeable WRB lapped over and taped to flashing
2. Metal cladding transition flashing
3. A/B Tape
4. Trim board (p.t.)
5. Deck membrane - Reinforce @ transitions
6. Cross purlins to provide slope
7. Foam air seal over blocking between joists
8. Extruded polystyrene insulation with spray-in-place foam at edges (Value to be considered by consultant on project-specific basis)
9. Self-adhered membrane
10. Metal "L" flashing often required

DECK TO WALL - WATERPROOF DECK | DETAIL BD4 1

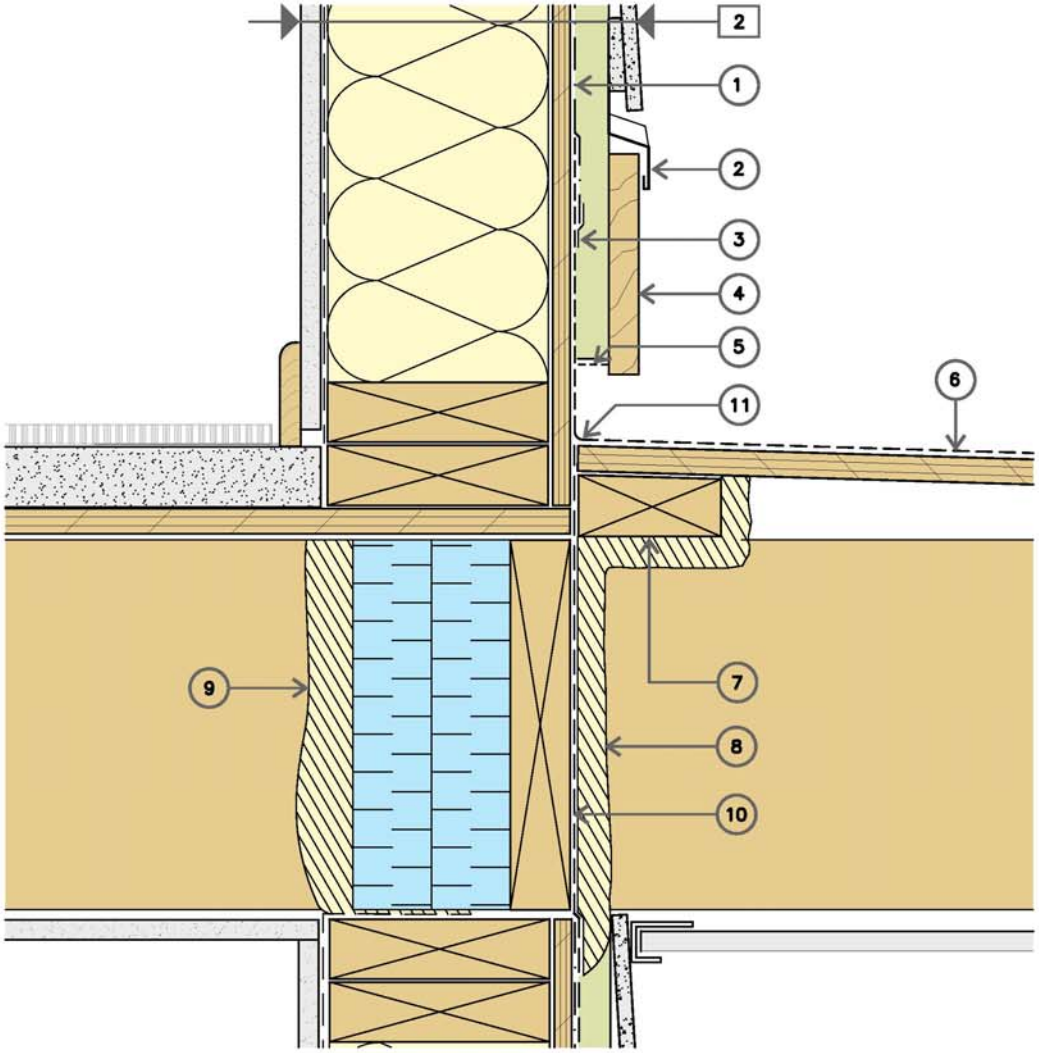

LEGEND

2 Wall Assembly
- Cladding
- Wood strapping (p.t.)
- Vapor permeable WRB
- Sheathing
- Wood framing with batt insulation
- Vapor retarder
- Gypsum board

1. WRB lapped over deck membrane
2. Metal cladding transition flashing
3. A/B Tape
4. Trim board (p.t.)
5. Insect screen
6. Deck membrane - Reinforce @ transitions
7. Cross purlins to provide slope
8. Foam air seal over blocking between joists
9. Extruded polystyrene insulation with spray-in-place foam at edges (Value to be considered by consultant on project-specific basis)
10. Self-adhered membrane
11. Metal "L" flashing often required

DECK TO WALL - WATERPROOF DECK | DETAIL BD4 2

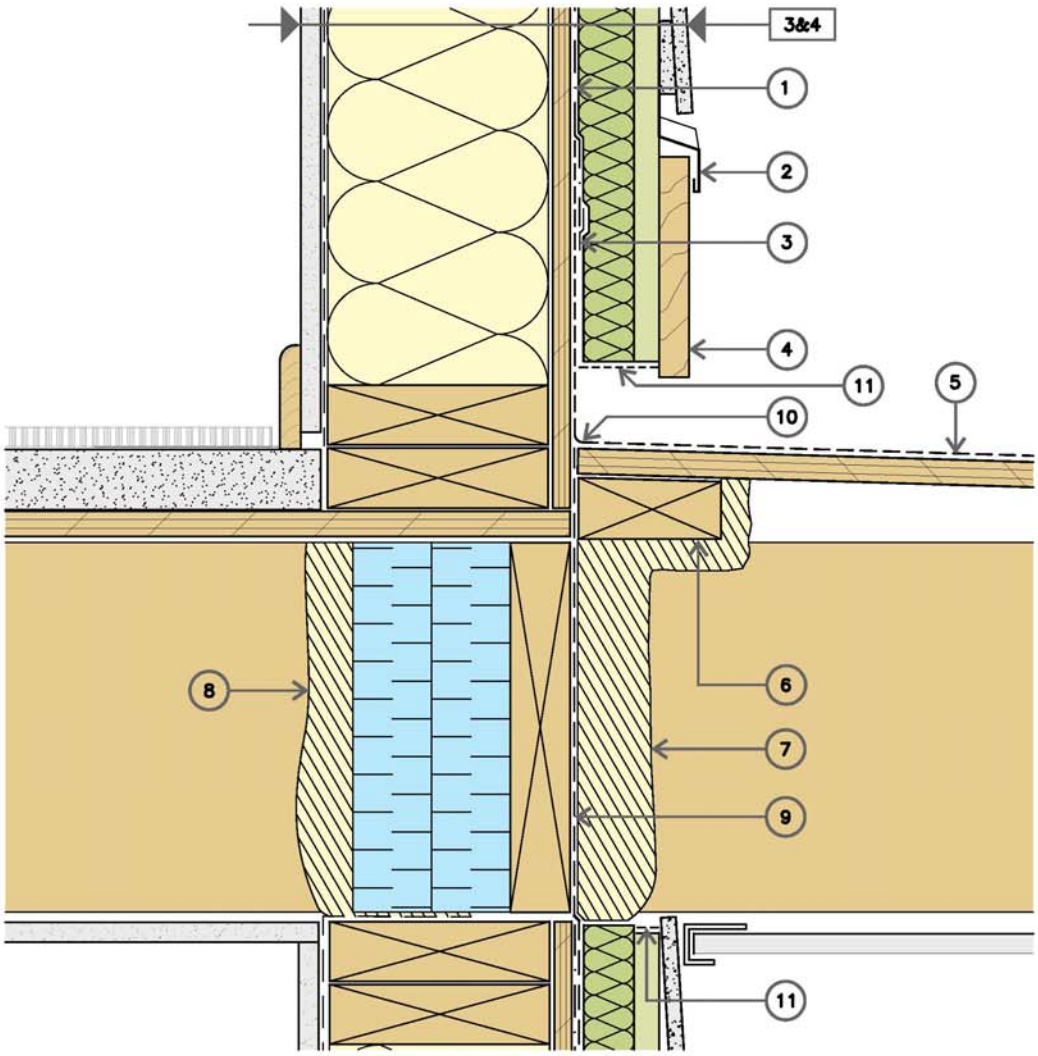

LEGEND

3&4 Wall Assembly
- Cladding
- Wood strapping (p.t.)
- Semi rigid insulation
- Vapor permeable WRB
- Sheathing
- Wood framing with batt insulation
- Vapor retarder
- Gypsum board

1. WRB lapped over deck membrane
2. Metal cladding transition flashing
3. A/B Tape
4. Trim board (p.t.)
5. Deck membrane - Reinforce @ transitions
6. Cross purlins to provide slope
7. Foam air seal over blocking between joists
8. Extruded polystyrene insulation with spray-in-place foam at edges (Value to be considered by consultant on project-specific basis)
9. Self-adhered membrane
10. Metal "L" flashing often required
11. Insect screen

DECK TO WALL - WATERPROOF DECK | DETAIL BD4 3&4

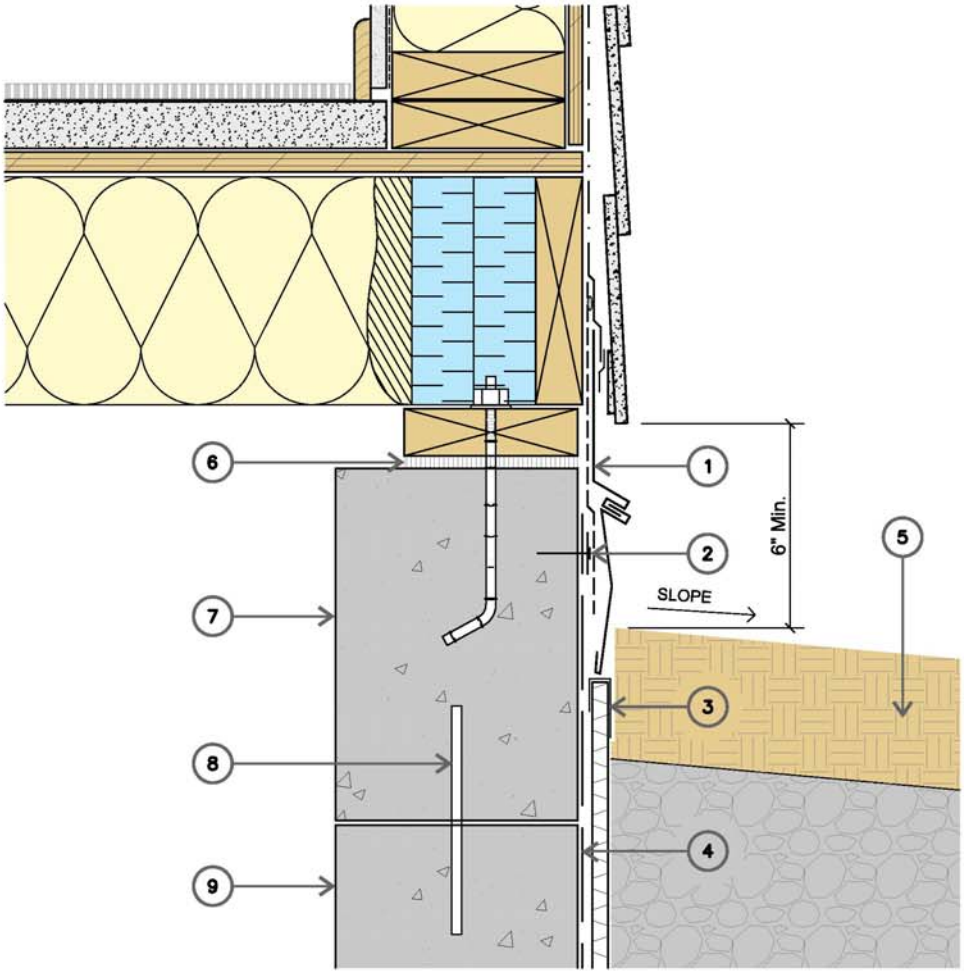

LEGEND

1. Two-piece pre-finished metal flashing
2. Waterproof membrane termination bar
3. Plastic drain composite with filter fabric wrapped over the top of the drain mat
4. Waterproof membrane
5. Backfill
6. Sill gasket
7. Concrete stem wall
8. Steel dowel
9. Existing concrete foundation wall

BURIED SILL PLATE - REFRAME | DETAIL BG3.1 1

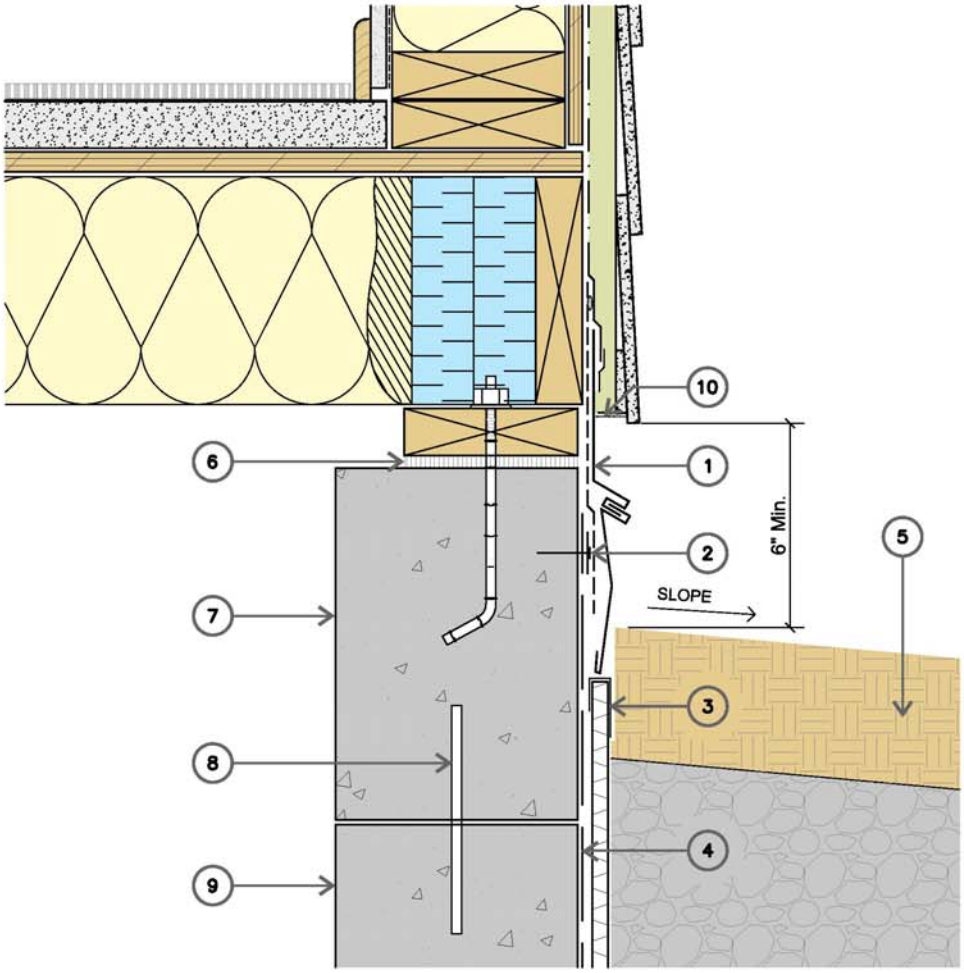

LEGEND

1. Two-piece pre-finished metal flashing
2. Waterproof membrane termination bar
3. Plastic drain composite with filter fabric wrapped over the top of the drain mat
4. Waterproof membrane
5. Backfill
6. Sill gasket
7. Concrete stem wall
8. Steel dowel
9. Existing concrete foundation wall
10. Insect screen

BURIED SILL PLATE - REFRAME | DETAIL BG3.1 2

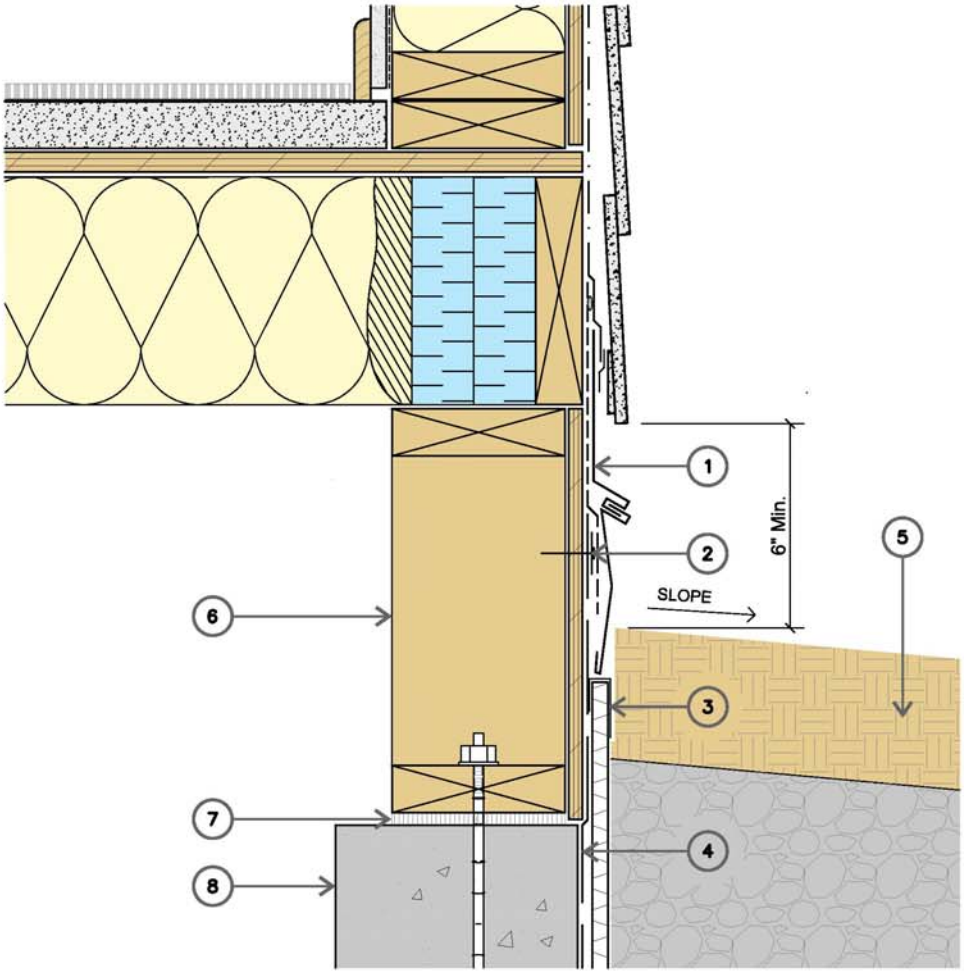

LEGEND

1. Two-piece pre-finished metal flashing
2. Waterproof membrane termination bar
3. Plastic drain composite with filter fabric wrapped over the top of the drain mat
4. Waterproof membrane
5. Backfill
6. Existing framing
7. Existing sill gasket
8. Existing concrete foundation wall

BURIED SILL PLATE - WATERPROOF & DRAIN | DETAIL BG3.2 1

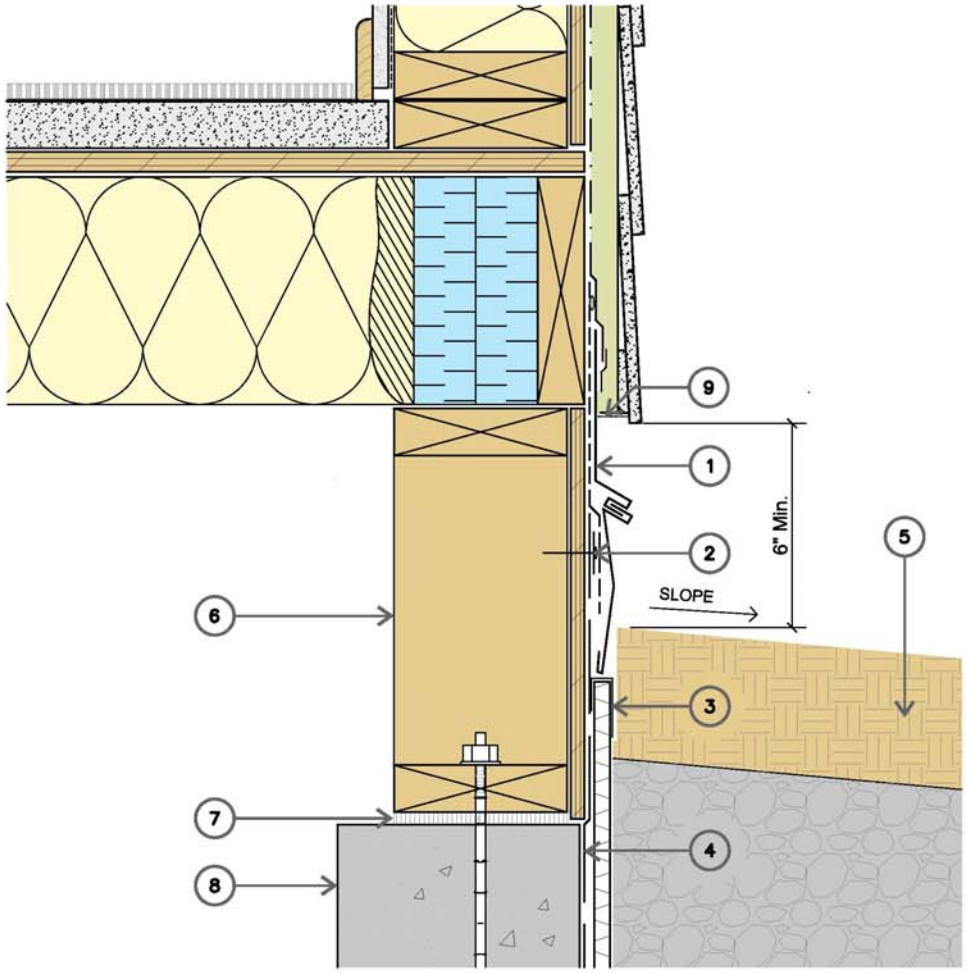

LEGEND

1. Two-piece pre-finished metal flashing
2. Waterproof membrane termination bar
3. Plastic drain composite with filter fabric wrapped over the top of the drain mat
4. Waterproof membrane
5. Backfill
6. Existing framing
7. Existing sill gasket
8. Existing concrete footing
9. Insect screen

BURIED SILL PLATE - WATERPROOF & DRAIN | DETAIL BG3.2 2

CHAPTER CONTENTS

5 BIDDING 5-1

5.1 Introduction 5-1
5.2 Implementation Approaches 5-1
5.3 Front-End Documents 5-3
5.4 The Bid Process 5-4
5.5 Costs 5-7

TABLE OF TABLES

Table 5-1 Relative Total Cost of Construction with Wall Assembly as Basis 5-10

TABLE OF FIGURES

Figure 5-1 Traditional Delivery Approach 5-1
Figure 5-2 CM – At-Risk Approach 5-2
Figure 5-3 CM – Advisor Approach.....5-2
Figure 5-4 Design-Build Approach.....5-2
Figure 5-5 Typical Rehabilitation Schedule 5-6
Figure 5-6 Distribution of Costs 5-8
Figure 5-7 Construction Costs by Element.....5-10
Figure 5-8 Construction Costs by Activity 5-10
Figure 5-9 Distribution of Material Costs.....5-11

THIS PAGE INTENTIONALLY LEFT BLANK

5 BIDDING

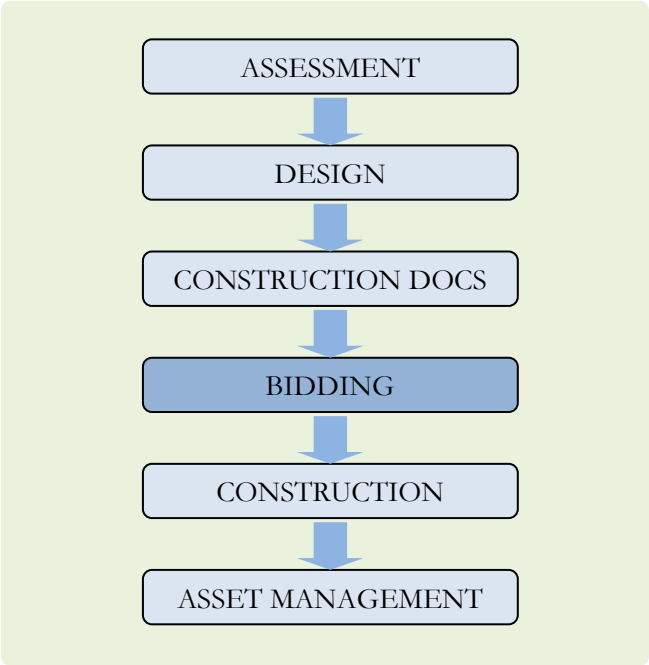

5.1 Introduction

This chapter presents some of the more common construction deliver methods. Although simplified, the basic contractual arrangements are presented here for clarity.

The consultant responsibilities during the bidding phase will typically remain consistent. The consultant is responsible for:

- Assembling thorough and accurate bid documents.
- Assisting and advising the owner in obtaining bids or negotiating proposals.
- Assisting and advising the owner in qualifying contractors (except in public bid scenarios)
- Assisting and advising the owner in preparing contracts for construction.
- Assisting and advising the owner in awarding contracts for construction.

5.2 Implementation Approaches

There are 3 common approaches that have evolved for the delivery of construction projects:

- Traditional delivery (design-bid-build)
- Construction-managed delivery
- Design-build delivery

The selection of an implementation method for a given rehabilitation project should be based on a number of factors, including:

- Experience and abilities of the consultant.
- Size of the project.
- Nature of the rehabilitation work.
- Number of sub-trades involved in the project.
- Availability of qualified and experienced trade contractors and general contractors.
- Ease of quality assurance with each approach.
- Relative costs of the alternate approaches.
- Other specific needs of the owner.

5.2.1 Traditional Delivery

The traditional approach begins with the consulting team preparing construction documents (drawings and specifications) that are then tendered to general contractors. The owner will contract directly with the general contractor to perform the construction work. The general contractor contracts independently with various trade contractors for specific components of the work. Figure -1 represents the relationships between the owner, consultant, and contractor. This is the more common approach for building enclosure rehabilitation work.

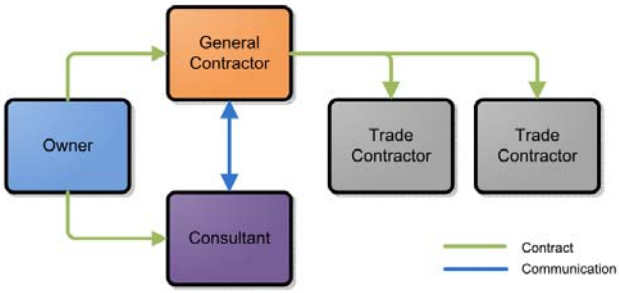

Figure 5-1 Traditional Delivery Approach

5.2.2 Construction-Managed Delivery

The second approach is termed a Construction-Managed (CM) approach. In its most fully developed form, the owner would retain a construction manager to guide the construction procurement process and provide input with respect to costs and other construction issues throughout the project. The construction management approach involves tendering the work directly to trade contractors and subsequently managing construction activities on site.

This approach has two basic forms:

- CM – At Risk
- CM – Advisor

The CM-At Risk scenario involves the consultant, a construction manager (usually a general contractor or a construction management firm), and trade contractors who contract with the construction manager (CM-At Risk).

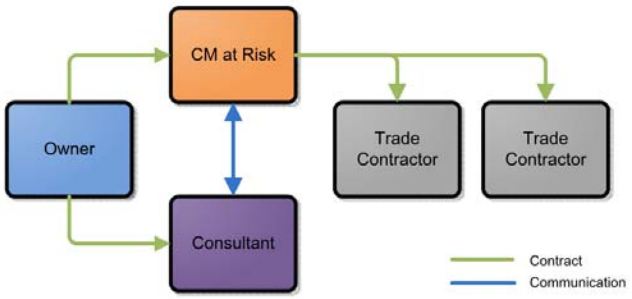

Figure 5-2 CM – At-Risk Approach

The CM-Advisor scenario involves the consultant, a construction manager (usually a general contractor, or a construction management firm), and trade contractors who would contract directly with the owner

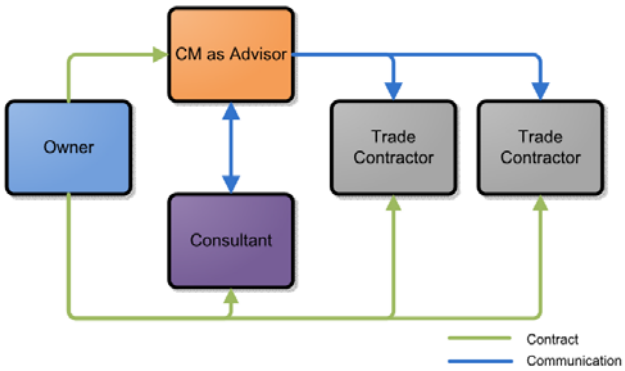

Figure 5-3 CM – Advisor Approach

5.2.3 Design-Build Delivery

Design-build is essentially a turnkey approach to project delivery. A contractor and consultant team provide the project delivery on a unified basis with a design-build contract between the owner and contractor. A separate contract exists between the contractor and consultant.

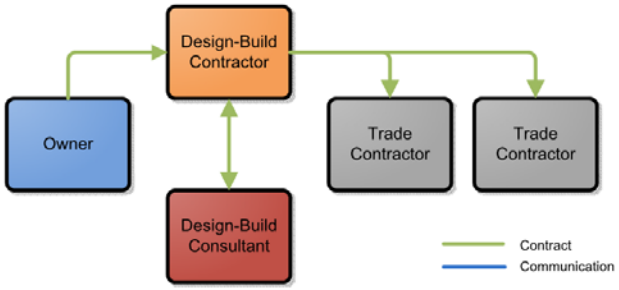

Figure 5-4 Design-Build Approach

5.2.4 Unknown Costs

In all 3 of the approaches discussed above, the contractor's role is to undertake the construction in accordance with the construction documents, usually for a stipulated price and within a reasonable and predefined schedule. Unfortunately, the nature of rehabilitation construction dictates that neither consultants nor contractors can completely determine the extent, severity, or cost of wood decay repair at the time of bidding. The amount of decay within the structure of the building can only be determined once the exterior walls are stripped and the structure is exposed. Estimates of

the time and materials should be included in the contract cost as a contingency to accommodate these unknowns. This estimate also provides for a level field during the bid process. Upon verification of the work necessary to repair the decay, the cost of the work and the schedule may need to be adjusted.

5.3 Front-End Documents

Chapter 4 discusses the general requirements and technical specification sections of the contract documents. In addition to those sections are the Division 00 bid and contract requirements sections. These sections are traditionally referred to as the "front end" of the specification book. The Construction Specifications Institute defines these sections as:

- 00 01 00 Bid Solicitation
- 00 02 00 Instructions to Bidders
- 00 03 00 Information Available to Bidders
- 00 04 00 Bid Forms and Supplements
- 00 05 00 Form of Agreement
- 00 06 00 Bonds and Certificates
- 00 07 00 General Conditions
- 00 08 00 Supplementary General Conditions
- 00 09 00 Addenda and Modifications

Although the front-end documents are often prepared in draft form by the consultant, they will eventually form part of the contract between owner and contractor and therefore should be reviewed by the owner's legal council to ensure that the owner's interests are appropriately represented.

Some specific aspects of sections 00 02 00 and 00 04 00 are discussed below.

00 02 00 Instructions to Bidders

The Instructions to Bidders section describes the bidding process. For rehabilitation projects they typically include the following:

- Bid invitation noting the time and location of bid submissions
- Bid opening procedures
- Description of project intent, time frame, nature of site and occupants, intent to phase work, etc.
- Definition of terms
- Substitutions of products
- Examination of site
- Bidder qualification requirements
- Bid enclosure requirements
- What the bid price is to include and not include, such as labor, material, taxes, contingencies, and adjustments
- Offer acceptance/rejection criteria
- Duration of offer for acceptance or rejection of offers
- Restrictions on contracting directly with residents
- Owner/contractor contract

00 04 00 Bid Forms and Supplements

The bid form is the offer made by the contractor to enter into an agreement with the owner for the price the contractor provides in the bid form. The bid form also provides an opportunity for contractors to confirm that they have received and are familiar with all of the bid documents and have enclosed all of the necessary submissions with their bids. Any unit pricing information required is also provided in the bid form.

5.3.1 Owner/Contractor Agreement

The owners may need assistance developing a contract between themselves and the contractor. This agreement should be included as part of the bidding documents so contractors clearly understand what type of agreement they would be entering into if their bid is successful.

There are a variety of forms of agreements that can be utilized to implement these approaches, with the most common being the American Institute of Architects document *A101-2007 Standard Form of Agreement Between Owner and Contractor (Stipulated Sum)* and corresponding *AIA A201-2007 General Conditions of the Contract*. It is this standard form of agreement that serves as the basis of further discussion in Chapter 6.

5.3.2 Insurance, Warrantees, Guarantees, and Bonding

Warrantees, guarantees, or bonding will need to be considered as part of the rehabilitation project. Although it is beyond the scope of this guide to explain these terms and the options available to the owner in detail, the task of educating the owner in this regard will to a limited extent fall to the consultants. It is recommended that the owner's legal counsel to assist in determining what requirements will ultimately be contained in the front-end documents.

Contractors are often required to demonstrate their ability to perform for various aspects of the work through certain performance guarantee vehicles, or bonds. The bonds have cost impacts to the project that may outweigh their usefulness, depending on the size of the project. Therefore, requirement for certain bonds should be weighed against their value to the owner. Common insurance, warrantee, guarantee, and bonding vehicles include:

- Bid bonds.
- Labor and material payment bonds.
- Performance bonds.
- Insurance provided by the general contractor.
- Warranty provided by contractor through AIA 201 (or similar) from of agreement.
- Consultant professional liability insurance (including the possibility of project-specific insurance).
- Product manufacturer's warrantees.

5.4 The Bid Process

This guide refers to the terms "bid" and "bidding". In fact, the bid process includes formal contractual agreements between the owner and the bidding contractors. Generally speaking, owners invite contractors to present a bid to perform work on a project. This process of submission is an acceptance of the owner's bid offer and construed as a freestanding contractual agreement (assuming the bid is compliant with the requirements) between the owner and contractor. One of the terms of this first contract is that the bidder is obliged to enter into a second contract (the construction contract) if they are awarded the bid. In this case the AIA A201 or similar form of agreement becomes the base document for that contract. The bid process is that in which the offers (contractor bids) are solicited, submitted, reviewed and selected.

The bidding process has legal consequences and there are a number of explicit and implied responsibilities imparted upon all participants. Owners should be aware that the bid process is not to be taken lightly and must be conducted under the direction of professionals familiar with the process. Owners should always seek advice or direction from their legal counsel with respect to bidding issues.

5.4.1 Bid Clarifications

As discussed in other sections of this guide, the overall experience and qualifications of the contractor are extremely important. Experience and qualifications should be clearly identified in the bidder requirements. To emphasize certain aspects of the work, clarify the owner's intent, and convey other important information to the bidders, a mandatory prebid conference on-site is extremely useful.

This personal contact with the bidders provides an invaluable opportunity to describe the existing conditions and restrictions associated with the site and help minimize misunderstandings that result in change order requests after the contract is awarded.

Any clarifications made at the site meeting should be documented in writing and distributed to all bidders. Similarly any questions posed to the consultant during the bid period that would impact design or cost should be done in writing with clarifications issued in writing to all bidders as addenda.

5.4.2 Selecting a Contractor

The owner's consultant is generally the best resource in identifying contractors that should be invited to submit a bid for the rehabilitation project. Contractors must be prequalified upon their ability to perform the

contemplated work. For public bid projects, prequalification must be determined by the bidder qualification requirements, rather than on the personal experiences of the consultant and owner.

The following represents a list of factors to consider in the prequalification process:

- The contractor's ability to effectively manage the work
- The contractor's ability to cooperate and work with the consultant
- The contractor's reputation for completing work on time and on budget
- The contractor's reputation for pricing change orders fairly and reasonably
- The contractor's proven expertise in rehabilitation construction
- The contractor's financial strength and capability

While it is customary to have contractors compete for work in a competitive process, price is not the only factor to consider in making the selection. Especially in rehabilitation work, value is often more important than the lowest price. Owners and consultants are cautioned that all factors to be considered in selecting a contractor by means of a formal bidding process must be fully disclosed to the contractors in the bid documents. The body of law regarding the bid process favors the low bidder unless these criteria, and the basis upon which they have been evaluated, have been clearly articulated in the bid documents. In the absence of clearly stated selection criteria, the low bidder may sue if they are not awarded the contract.

It may be appropriate to utilize a weighted bid award method to include the importance of non cost-related qualifications.

Typical selection criteria include the following:

- Price
- Schedule
- Strength of the specific superintendent to be assigned to the project
- The contractor's specified hourly rates, unit rates, alternate prices, or separate prices
- The contractor's presentation of cost-saving proposals
- Inclusion of all bid submittals (bonds, proof of suitable insurance coverage, etc.)
- The contractor's ability to present a project approach, experience, qualifications, and overall knowledge of the design intent.

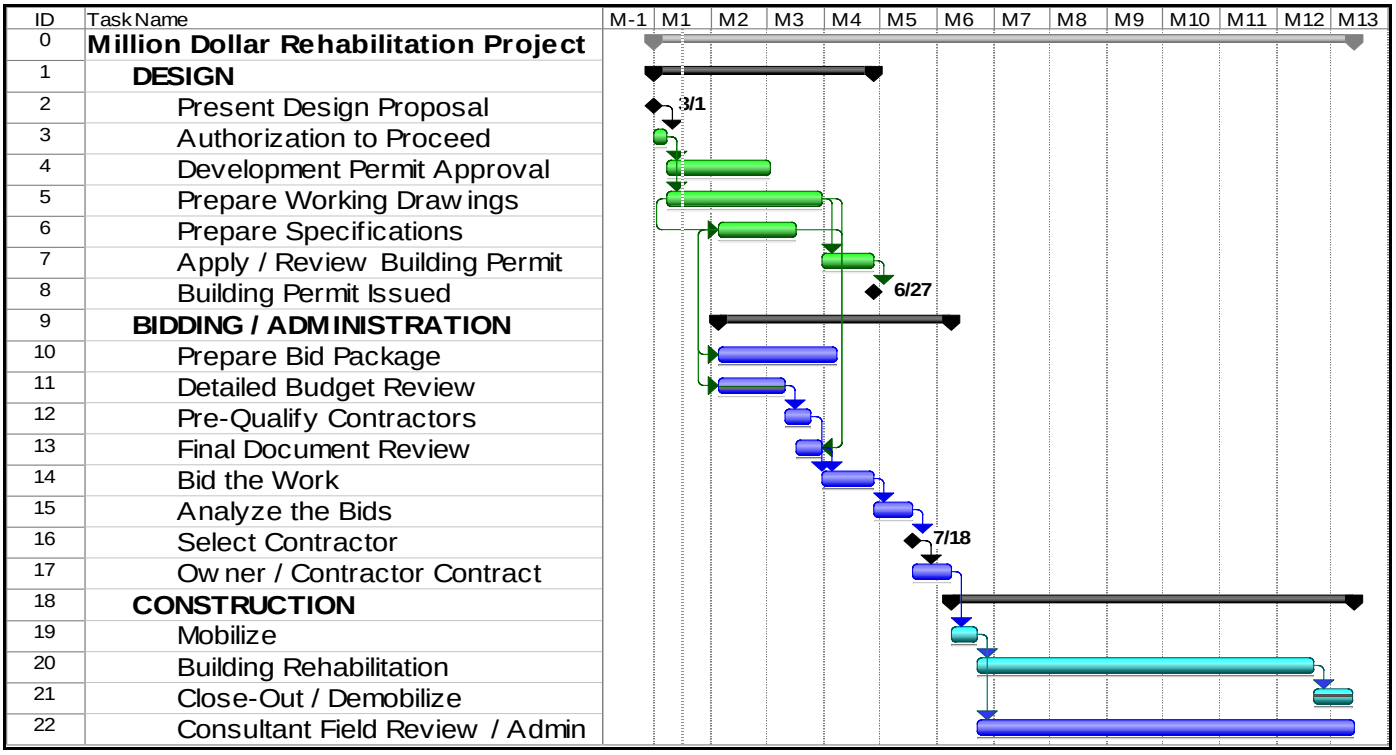

Figure 5-5 Typical Rehabilitation Schedule

5.4.3 Construction Schedule

The time required to complete the construction work represents only a portion of the time required for the entire rehabilitation process. In fact, the schedule begins once the owner decides to proceed with repairs. Owners must be aware that the total time frame for the rehabilitation process must make an allowance for preparing drawings and specifications, obtaining permits, prequalifying contractors (if it's not a public bid), bidding the work, finalizing a contract with the contractor, mobilizing the contractor, and the actual construction activity. Figure -5 shows a schedule for a typical rehabilitation project with a construction value of one million dollars. Note that project duration does not have a linear relationship with project value.

5.4.4 Permits

The work defined by the bid documents is a construction project and is subject to building permit requirements set forth by the municipality at the place of the work. Owners are required to submit a proper building permit application and pay the building permit fees required by the jurisdiction (regardless of whether or not the contractor is required to physically obtain such permits). The work required to prepare the permit documents and make the permit application is best performed by the owner's consultant and should be included as part of that consultant's scope of services. The time required to obtain a building permit varies from district to district and will often depend greatly on the extent of architectural modification to the building. When the process significantly changes the appearance of the building or the building is subject to historic review requirements, additional steps or permits are often required, including a land use review or approval by a historic preservation committee. Municipalities handle the permitting requirements differently from location to location. Some require formal amendment to the original development permit, while others accommodate approval through the building permit application. The schedule shown in Figure -5 identifies this aspect only as Apply/Review Building Permit. Determine specific municipal requirements for

development issues early in the process, as they have potential to be very time-consuming.

Apply for the building permit as soon as is practical in the design process (usually this can be done at the time the work is bid). In finalizing arrangements with the contractor, consider the timing for the receipt of the permit, since work cannot start until the permit is in hand. Consultants should verify if building permit fees are required and include the cost of the building permit in the overall project budget.

The contractor is best suited to obtain trade permits for incidental plumbing or electrical work and to arrange for associated municipal inspections. The cost, effort, and length of time required to obtain the trade permits is typically not significant; however, the bid documents should clearly identify the responsibility for obtaining them.

5.4.5 Owner Involvement

The owner can help the rehabilitation and bidding process by establishing an individual or small group of individuals who will act as liaison between the owner and the contractor, specifically for issues arising from the construction such as:

- Accessing resident units
- Providing notice to the owner
- Providing rapid approvals for issues
- Communicating requests for more significant decisions to the homeowners' association
- Coordinating site access and material storage locations
- Assisting in communicating with the remaining owners and occupants as work progresses

The owner should also consider areas for parking, site storage, site trailers, and portable toilets prior to the job bidding in order that additional street occupancy permits and temporary construction are added to the cost estimate of the work.

It is also important to understand that, depending on the extent of the rehabilitation, the landscaping may be virtually destroyed and a contingency for complete removal and/or replacement may need to be added to the project budget. Many multiunit residential complexes have relationships with landscapers and are typically well-served to arrange for the removal and replacement of landscaping elements separate from the rehabilitation contract.

The owner should fully understand the terms and conditions of contractor payment and the requirements for timely delivery of payment. Compliance with the contracted terms of payment will help the owner and contractor maintain a good relationship.

5.5 Costs

5.5.1 Realistic Project Budgets

In many ways, cost overruns or extended project schedules have more to do with unrealistic expectations and inadequate budgets than they do with unanticipated conditions. It is essential to assemble realistic project budgets that accurately reflect probable costs. When preparing a rehabilitation budget, it is pointless to be unrealistically optimistic and understate probable costs. This can result in owners committing themselves to a project that they are unable to pay for. It is equally irresponsible to be overly conservative and inflate budget numbers, which can result in owners delaying or not proceeding with necessary repairs. In preparing budgets that are realistic, it is important that the consultants include the following:

- Consultant fees
- Legal review fees
- Construction costs
- Construction-contingent costs for anticipated but unknown costs, like wood decay, mold, etc.
- Building permits
- Sales tax (if applicable)
- Other costs that may not strictly be part of the rehabilitation project, such as landscape repair,

additional property management work, additional security, etc.
- An owner contingency for unforeseen or unexpected problems
- Special inspection

Figure 5-6 graphically represents the cost distribution for a typical project budget where construction costs are anticipated to be in the order of one million dollars. The costs do not include consultant fees during the evaluation stage and assume a traditional project delivery model. As shown, sales tax is not a factor in Oregon .

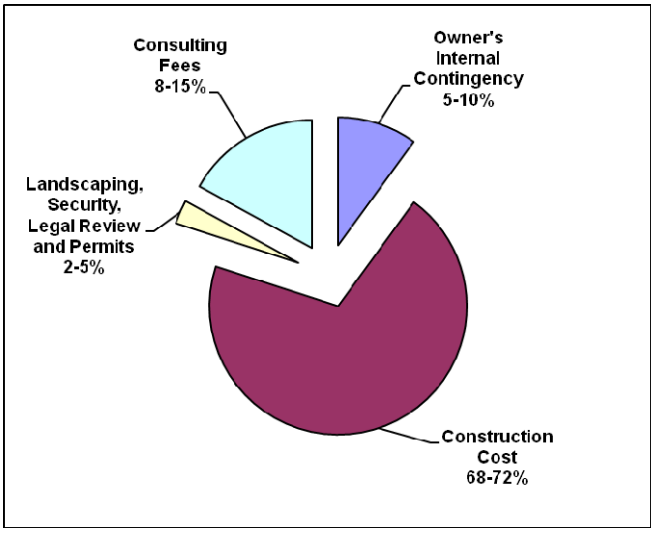

Figure 5-6 Distribution of Costs

There are many aspects of the construction costs that can be defined and estimated once the program is confirmed. Various contingencies are included in the project both by the owner and as part of the construction budget. The owner will carry an overall contingency for unforeseen project costs. The construction budget will also carry a contingency for wood decay and structural repairs and possibly other costs that are likely to occur.

The project cost estimates described in the following section include the construction contingency but typically do not include the owner's contingency. The owner's contingency should be set to cover the high side of the accuracy range indicated. Therefore, suggested owner contingency figures should be 40% at the condition assessment stage, 20% at the design report stage, and 5–10% at the prebid stage.

5.5.2 Budget Evaluation Stages

The items below address the milestones when the project budgets should be reevaluated, as well as the purpose and level of accuracy associated with each estimate.

Assessment Stage

At this stage in the rehabilitation project, the extent and severity of the problem is known in a general sense, and conceptual-level rehabilitation approaches have been identified. However, quantities are rough estimates, exact assemblies and details are not yet developed, and various phasing and implementation approaches are not yet established.

Estimates should be based on historic information from previous similar projects but considered accurate only to the ± 40% level. Estimates should include all project costs, not just construction costs.

These estimates are useful in alerting the owner to the overall magnitude of the rehabilitation project and in allowing owners to make decisions on proceeding to the next steps in the design of the rehabilitation. The accuracy of these estimates is not usually appropriate for determining actual budget values, since the program is not yet fully defined.

Design Stage

The project cost estimates that form part of the design stage will be based on more detailed development of the proposed assemblies, more accurate quantity take-offs, and much more thought given to phasing of the work and construction implementation. These construction cost estimates should be prepared with the assistance of a quantity surveyor, construction manager, or contractor familiar with remedial work.

Once decisions are made based on the alternatives, the project budget estimates are usually considered accurate to ± 20%.

These estimates can be used for overall project planning purposes (project estimate + 20% owner contingency).

Pre-Bid Stage

Near the completion of the construction documents stage, refine the project estimate based on the complete documents. It may be necessary to pay a quantity surveyor, construction manager, or contractor for assistance at this stage, and the project budget should include this cost. The contractor's review of the construction documents for budgeting purposes will also likely result in more general comments and questions from the contractor regarding those documents, in addition to possibly identifying cost-saving opportunities and assisting in developing a preliminary construction schedule and cash flow plan.

The construction cost estimate provided at this stage should be combined with other project costs to arrive at an overall project estimate accurate to within ± 5-10%.

Construction project bidding should not proceed without this estimate being complete and the owner ensuring that appropriate funding is in place. The detailed breakdown of this estimate will also form the basis for contractor bid evaluations. Note that the owner's overall project budget should be the project construction estimate plus a 5-10% owner contingency.

Construction Stage

The construction budget is established based on the accepted bid plus all construction and owner contingencies. In conjunction with the contractor's progress draws, a monthly analysis of the budget should be done to forecast costs. A cost forecast should look ahead to identify schedule changes or probable costs based on unknowns that have become clearer. By reviewing the budget monthly, there are fewer chances that big surprises will arise, and as the work is completed the certainty associated with the final project costs increases. The accuracy of the overall project budget estimate gradually improves from the ± 5-10% level.

5.5.3 Construction Cost

Construction costs are the most significant of all the costs that compose the overall project budget. To understand how various factors may influence construction costs, it is helpful to see how the construction cost portion of the overall project budget is developed. Figures -7 and -8 demonstrate how the construction costs for a typical wood-framed rehabilitation project are allocated. Note that structural repairs in Figure -8 refer to work required due to wood decay and interior finish work, as well as other framing work required due to deficiencies in the original construction. These structural costs can vary significantly, depending on the extent of damage to the building.

Using these typical cost spreads as the basis for discussion, the following sections explore how various factors may influence costs and discuss the significance of such impacts in terms of the overall construction budget. With a better understanding of these factors, consultants, owner groups, and contractors can make more informed decisions with respect to rehabilitation projects.

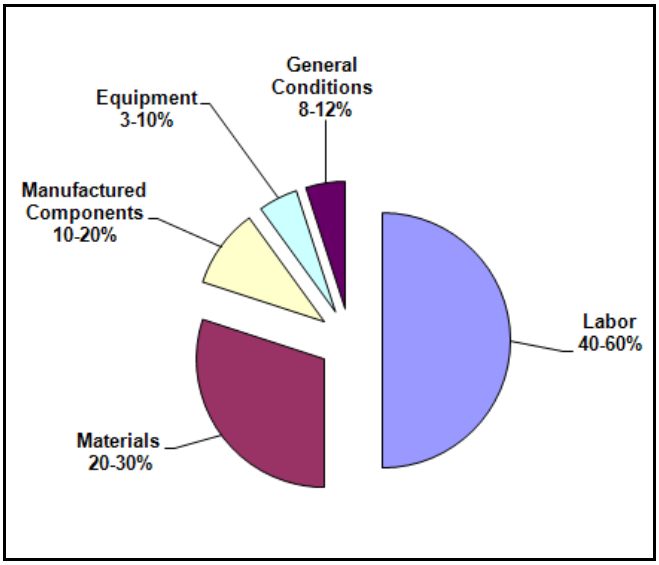

Figure 5-7 Construction Costs by Element

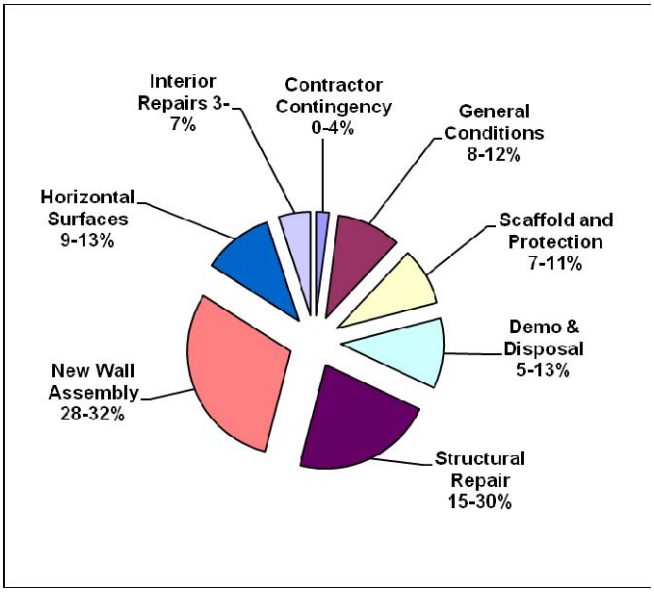

Figure 5-8 Construction Costs by Activity

5.5.4 Wall Assembly Costs

For comprehensive restoration projects, one of the fundamental decisions that the owner and consultant must make is selection of an appropriate wall assembly to replace the existing failed assembly. Earlier sections of this guide present various options in this regard. Through the early cost exercises, the consultant can develop a table that provides the relative total cost of construction as a function of each wall assembly. A minimum safe and code-compliant repair may be used to establish the base, or 100% cost. Then each alternative is priced as a percentage total of that normalized cost. Table -1 below shows a simplified approach, using just a few basic cladding options. Note that the values below are for illustration purposes only and do not represent actual industry costs for those assemblies.

Table 5-1 Relative Total Cost of Construction with Wall Assembly as Basis

Wall Type	Assembly Description	%
LS-1	Lap Siding – Concealed Barrier	100% (base)
LS-2	Lap Siding – Rainscreen (RS)	+5%
LS-3	Lap Siding – Exterior Insulated RS	+12%
MP-1	Metal Panel - Rainscreen	+15%
BV-1	Brick Veneer - Rainscreen	+52%

5.5.5 Choice of Materials

While building enclosure rehabilitation projects have a relatively predictable distribution of costs, the value of materials can vary significantly depending on the nature of a specific project.

Note that the bulk material costs (not including manufactured components such as windows) shown in Figure -7 typically represent 20% to 30% of the construction costs and are generally distributed in accordance with Figure -9.

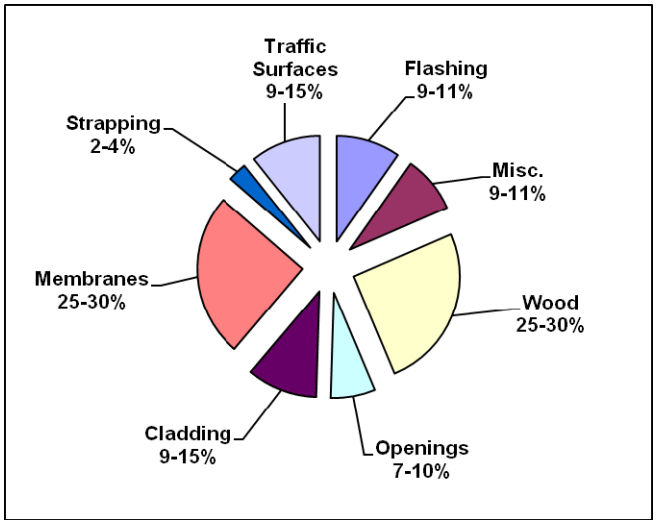

Figure 5-9 Distribution of Material Costs

Based upon this figure, we can see that a 20% cost savings in the value of wood or membranes (the more significant relative materials) would reduce the cost of work in the order of 1.8% (20% cost savings x 30% of material costs x 30% of total construction costs). In fact, a 10% savings on all materials would reduce the cost of work in the order of 2.5% (10% cost savings x 100% of material costs x 25% of total construction costs). It is therefore not likely that normal changes in material costs will result in significant changes to the overall cost of the work.

5.5.6 The Cost of Labor

Since labor costs can represent 40% to 60% of the construction cost, any gain in the labor efficiency results in the most substantial relative decrease in the overall cost of the rehabilitation. Unfortunately, enclosure rehabilitation almost always takes place on occupied buildings. This added complexity may restrict a contractor's ability to undertake the work in the most efficient manner possible. A contractor must be sensitive to the needs of the occupants and expend labor in ways that are not necessary in new construction. In order to obtain good pricing, the consultant and owner should make every effort to facilitate the construction process and provide every opportunity for the contractor to work as efficiently as possible.

CHAPTER CONTENTS

6 CONSTRUCTION 6-1

6.1 Introduction 6-1
6.2 Administration 6-2
6.3 Shop Drawings and Submittals 6-5
6.4 Quality Assurance.....6-5
6.5 Cost Tracking.....6-9
6.6 Closeout Requirements..... 6-11

OCCUPANT SAFETY APPENDIX 6-12

6.7 SAFETY MEASURES FOR BUILDING OCCUPANTS DURING CONSTRUCTION 6-12

TABLE OF FIGURES

Figure 6-1 Window Testing.....6-7
Figure 6-2 Window Test Flowchart.....6-8

THIS PAGE INTENTIONALLY LEFT BLANK

6 CONSTRUCTION

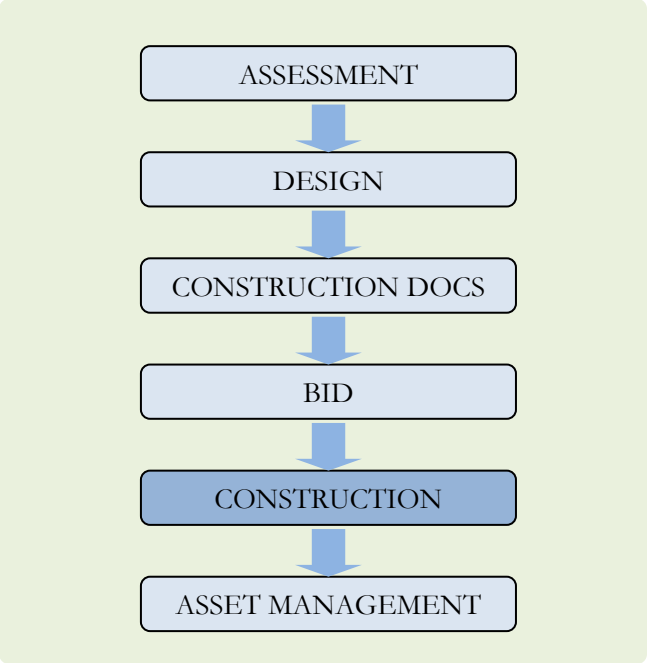

6.1 Introduction

Once the bidding process is complete and contractors are selected, the construction process begins. The consultant's role expands as defined in the consultant/owner agreement and the consultant fulfills two primary roles during construction. The first is to administer the contract and the second is to review the quality of the work. It is also possible that the consultant may be providing construction management services, depending on the selected implementation approach as discussed in Chapter 5. The consultant's primary responsibilities typically include the following:

- Contract administration
- Represent, advise, and consult with the owner
- Act on the owner's behalf while administering the contract
- Review contractor change order pricing
- Review construction progress and issue monthly certificates for payment
- Perform general field review of construction rehabilitation work for conformance with contract documents
- Provide construction clarification details

It is important for building owners who are not familiar with the design and construction process to understand the various roles and responsibilities in the contracts; between the owner and consultant, as well as between the owner and contractor(s). All types of construction contracts are used as agreements, however many projects use the American Institute of Architects (AIA) format. With regards to roles and responsibilities, the *AIA A201-2007 General Conditions of the Contract for Construction* states some commonly identified roles for the consultant:

- Section 4.2.2 - "The Architect will not be required to make exhaustive or continuous on-site inspections to check the quality or quantity of the Work. The Architect will not have control over, charge of, or responsibility for, the construction means, methods, techniques, sequences or procedures, or for the safety precautions and programs in connection with the Work, since these are solely the Contractor's rights and responsibilities under the Contract Documents, except as provided in Section 3.3.1."

- Section 4.2.3 - "The Architect will not be responsible for the Contractor's failure to perform the Work in accordance with the requirements of the Contract Documents. The Architect will not have control over or charge of and will not be responsible for acts or omissions of the Contractor, Subcontractors, or their agents or employees, or any other persons or entities performing portions of the Work."

Although the above two points are important, it is equally important to recognize that building enclosure rehabilitation work is a unique process that is not as familiar to many contractors as new construction. For this reason, the consultant should anticipate a more significant role during the construction field review than he or she may ordinarily anticipate. The consultant should bear in mind that, unlike other forms of construction, this effort is often being undertaken because of the prior failures made by others. As such, the project performance expectations are likely to be more stringent and the tolerance for even minor

deficiencies much lower. See section 7.4 below for further discussion.

6.2 Administration

6.2.1 Contract Administration

In addition to the role as administrator of the contract and having a responsibility to fairly interpret the contract documents, the consultant is the representative of the owner during construction. The consultant must therefore report to the owner regarding the progress and quality of the work and also provide advice to and consult with the owner regarding decisions required during construction. Some other requirements of the consultant associated with the contract administration role include:

- Interpreting the requirements of the contract documents.
- Providing interpretations, clarifications and supplemental instructions in written and graphic form to the contractor during construction.
- Reviewing contractor submittals and take appropriate actions.
- Carrying out the general review of the work as discussed in the previous section, along with using the authority to reject work that does not comply with the contract documents.
- Assigning cost values to the rejected work.
- Issuing monthly certificates for payments confirming the amounts owing to the contractor.
- Preparing change orders.
- Determining the date of substantial performance of the work.
- Ensuring closeout documentation is completed.
- Verifying and issuing certificate of final payment.

Project Insurance

Before construction begins, the contractor should issue the owner a certificate of insurance for the type of insurance and policy limits identified in the front-end portion of the specifications. Assuming the consultant has project management responsibilities within the scope of the contract, reviewing these certificates would be part of those responsibilities.

Due to laws enacted since 2009, insurers often do not provide third-party 30 day notice of insurance cancellation. Since this notification is no longer available, the owner should consider including language in the contractor's agreement that the contractor will notify the owner and consultant if their insurance has expired, been terminated, or is no longer valid in any way.

The consultant should recommend that the owner have his or her insurance agent review each certificate of insurance to confirm the coverage, endorsements, and exclusions are acceptable.

Owner-Controlled Insurance Policy

An Owner-Controlled Insurance Policy (OCIP), also called a "wrap-up" policy, is a single, project-specific insurance program purchased by the owner to cover the participants for their activities relating to the construction project. The project participants typically include contractors, consultants, and their respective subcontractors. For rehabilitation projects, an OCIP is typically used only on multimillion-dollar projects because the cost of the policy is significant. All participants are usually asked to reduce their cost by the amount they would have paid for their typical insurance coverage. However, the amount received from participants does not normally cover the premium for the policy.

The consultant should direct the owner to talk through options and risk management preferences with his or her insurance agent or legal council.

Contractor Monthly Billing Review

The consultant reviews the contractor's invoice each month and provides the owner with a certificate of payment identifying the amount the owner should pay the contractor. The owner/contractor agreement will address how the contractor is to appropriately bill for the work. The consultant should establish a clear expectation for what the contractor is to include with each monthly invoice. The requirements will depend on

the contract agreement, but some of the items may include:

- A preapproved Schedule of Values allocating the entire contract sum to the various portions of the work.
- A summary of all change orders showing percent complete. These approved change order amounts are often added at the bottom of the Schedule of Values prior to submission each month.
- A schedule that graphically identifies construction progress through the last day of the month being billed.
- A signed Progress Payment Release that provides a conditional waiver and release of lien.
- Any backup information required for time and material billings.

6.2.2 Project Meetings

Project Team Pre-Construction Meeting

After the contract is awarded, but before construction begins, a pre-construction meeting should be held with the project team. The owner's representative, the consultant, and the contractor should attend the meeting. The items to be discussed will vary depending on the nature and scope of the project but may include:

- Introduction of key personnel for the owner, consultant, and contractor.
- Clarification of communication channels, including that all communication between owners and contractor should be through the consultant.
- Exchange of emergency contact numbers for all parties.
- Formal approval to proceed with the work (if the contract has not been signed).
- Verification of site layout issues: site trailers, storage areas, temporary facilities, etc.
- Site-specific safety concerns and expectations.
- Discussion of procedural issues relating to contractor submittals.
- Establishment of the schedule for regular project meetings during construction.
- Review of the contractor's construction schedule.
- Review of the monthly progress payment procedure and responsibilities.
- Review of the process for resolution of issues identified as construction discrepancies by the consultant.
- Opportunity for each of the parties to articulate any concerns regarding the project.

The contractor may request at the pre-construction meeting or during construction that the owners provide evidence that sufficient funds are available to fulfill the owner's obligations under the contract.

Owner's Information Meeting Prior to Construction

If the building to be rehabilitated includes multiple residents or occupants, the contractor should coordinate an informational meeting with them should be set up prior to construction to set expectations for what those occupants are about to experience. The items to be discussed may include:

- Introduction of key personnel for the owner, consultant, and contractor.
- Safety and security procedures set up during the rehabilitation process (see appendix at the end of this chapter for a list of safety measures to review with owners).
- Contractor emergency contact numbers.
- Expectations of residents prior to construction on their unit.
- Unit access requirements.
- Abbreviated start-to-finish construction schedule.
- Communication plan for residents regarding construction progress.

Periodic Owner Meetings

Consistent meetings should be set up with the owner (or owner's representative), consultant, and contractor to review key items of interest for the project. The frequency of these meetings should be established before construction starts. Depending on the complexity of the rehabilitation or the availability of the owner, these meetings can be weekly, biweekly, or monthly; however, they should be on a consistent schedule. The agendas for these meetings typically include:

- Review of schedule.
- Review of quality issues.
- Review of costs and overall budget, including the contingency budget status.
- Any issues related to the relationship between the owner and occupants and the construction activity.
- Design clarifications.

It is common for the consultant to produce and distribute minutes for the project meetings. However, whether the contractor or the consultant prepares the minutes, it should be consistent throughout the project. The meeting minutes should include action items and completion dates. These meetings are commonly termed OAC (Owner, Architect, and Contractor) or OCC (Owner, Consultant, and Contractor).

Project Team Meetings

Biweekly or weekly project team meetings may or may not include the owner, but the intent is for the consultant and the contractor to resolve the technical details that will enable the contractor to proceed with the work. These may be held on a weekly basis or each time the consultant visits the site. The consultant should take minutes and distribute them to interested parties. These meetings are often combined or adjacent to the OAC meetings.

The contractor should also hold safety meetings weekly and the superintendent should take attendance and minutes.

6.2.3 Construction Schedule

The contractor should make an accurate overall project schedule available to the owner and consultant that addresses the construction progress from beginning to end of the project. In addition, the contractor would normally have a short-duration schedule or a "3-week look-ahead schedule" for detailed communication with the trade contractors. Both of these schedules should be reviewed during the periodic owners meetings.

6.2.4 Occupant Safety

Building occupants are often thrust into rehabilitation projects without a full appreciation of what they are about to experience. Living in a construction site presents many challenges, and occupant safety is particularly important. In order to promote occupant safety, it is imperative that occupants be aware of sensible safety practices. The appendix at the end of this chapter provides a summary of safety measures that should be presented to the occupants.

The contractor is responsible for insuring that the site is safe for both the workers and the building occupants.

6.2.5 Hazardous Substances

Mold

The presence of mold must be recognized by the consultant and the contractor and dealt with during the construction stage of a rehabilitation project. See prior sections of this guide for further discussion on mold.

Lead-Based Paint

When rehabilitation projects occur on buildings built before 1978, take special care to determine if lead-based paint will be disturbed during construction. Federal law requires contractors that disturb painted surfaces in homes, child care facilities, and schools built before 1978 to be certified and follow specific work practices to prevent lead contamination.

Asbestos

Follow the requirements of federal, state, and local agencies regarding asbestos. For buildings built prior to 1982, have an AHERA building inspector conduct a hazardous materials "good faith" survey of the areas to be renovated. A summary of the results of the asbestos survey should be posted at the work site.

6.2.6 Weekly Construction Updates From Contractor to Occupants

The consultant can help the flow of a project go more smoothly from the perspective the owners and the occupants by encouraging the contractor to communicate periodically with the residents. The frequency of the communication and the delivery methods will depend on the work being done. Some of the topics for communication may be:

- Scheduled work for the week
- Resident reminders
- Safety reminders

6.3 Shop Drawings and Submittals

Various submittals are required by the contract documents. These include samples of materials and components and shop drawings for some aspects of the work. Shop drawings are typically required for any manufactured components that must meet specified design criteria such as metal fabrications, metal roofing, or siding and glazed assemblies including windows, skylights and canopies.

It has been common for some window suppliers to provide simplified standard details that do not reflect the actual conditions for a particular project. Since one of the primary purposes for shop drawings is to confirm that a particular component is consistent with the overall design intent, it is important that shop drawings reflect the specifics of the project and therefore show the interface with other assemblies. Shop drawings not meeting specifications should be marked up by the consultant and returned for resubmission.

Prior to a supplier or trade contractor preparing shop drawings, the consultant, general contractor, and trade contractor should review the specific requirements for the submission at a project meeting. This meeting clarifies expectations for the shop drawings and review process and can resolve many technical issues prior to the production of the drawings.

Since, in many instances, two review cycles are required prior to approval of the drawings, considerable lead time is necessary. It is therefore important that the schedule anticipates the shop drawing review process.

6.4 Quality Assurance

There has historically been some misunderstanding regarding the role of the consultant in the quality assurance process during the construction stage. It is critical that the consultant explain to building owners the distinction between the consultant's and contractor's roles in delivering quality construction.

The consultant does not control or supervise the work of the contractor. It is the contractor who has responsibility for the means, methods, techniques, and procedures used in construction and the contractor who is to provide construction that is in general conformance with the intent of the contract documents. The consultant undertakes a general review, which involves examining and reporting on a representative sampling of the work. It is the contractor's responsibility to correct discrepancies the consultant notes, as well as ascertain that all similar occurrences of the discrepancy are identified and corrected.

The consultant does have a responsibility to interpret the contract documents impartially and must promptly issue clarifications and reports that document his or her observations made during construction review.

The consultant's responsibility under the consultant/owner agreement and the construction contract extends only to "general review" to determine "general conformity" with the contract documents. However, other documents and regulations may assign different and often greater responsibility. Letters of assurance may be required in certain jurisdictions, which require field review to ascertain that the work complies in all material respects with the plans and supporting documents for which the building permit was issued. Individual municipalities may require even greater levels of field review.

6.4.1 Field Review

Field review for rehabilitation construction is a key part of the quality assurance process and must be performed by the consultant. The field review effort must be coordinated among the consultant, general contractor, and trade contractors. A specific plan must be developed for this work that deals with the following:

- How are issues the consultant or contractor identified as discrepancies to be resolved?
- How are issues the construction documents do not address to be resolved?
- How are the resolutions to discrepancies tracked and who takes responsibility for completion of each item?
- What is the schedule for field review activities?
- Who is to receive copies of field review reports?
- How is information regarding discrepancies relayed to the trade contractors?

6.4.2 Deficiencies in Existing Construction

Consultants performing remedial work on an existing building have a responsibility to address certain deficiencies in the original construction that are uncovered during the work. The extent to which the existing building systems are to be reviewed for deficiencies in the original construction should be clarified with the owners. Typically this review is limited to systems that are directly impacted by the rehabilitation program: the building envelope, visible structural components, particular components of the plumbing and ventilation systems, and some fire and life safety systems.

Shoddy or substandard framing should be reframed to meet current code requirements. Examples include missing extra studs or blocking beneath point loads, missing framing hardware such as sill anchor bolts or joist hangers, and lack of adequate bearing for beams or joists at supports. Inadequate balcony guardrails and attachments is another common deficiency in existing construction. Additional framing support or upgrades may be required to support a new rainscreen wall system.

6.4.3 Mock-Ups and Testing

Mock-Ups

Mock-ups are an established and desirable part of the new building construction process. The use of mock-ups and testing is equally important in rehabilitation construction. Mock-ups are full-size construction samples of important or difficult assemblies and details that are intended to form part of the construction of the building. They can be created separately from the actual building (off-building mock-up) or they can be built to be incorporated into the final construction (on-building mock-up). They are usually done prior to construction or at the start of the work for typical details and during the construction for atypical details.

The purpose of the mock-up is to confirm and convey the design intent for typical and difficult interfaces. They are an important quality assurance measure because they:

- Define and establish materials and installation methods.
- Define and establish interface details with adjacent systems.
- Complete testing to confirm that the performance criteria defined in the construction documents are met.
- Provide direction to the material or component manufacturer and sub-trade installer with respect to standards, expectations, and quality.

The key to the successful use of mock-ups is to identify the scope, size, and location of mock-ups as much as possible during the design stage and to include a mechanism for requesting additional mock-ups should a difficult detailing situation arise during construction. Furthermore, the construction of mock-ups should be undertaken by the actual trade contractors who will be performing the construction of the building. Upon completion the mock-ups, they should be available as a reference of the standard expected for the balance of the envelope construction.

Testing

Testing has also become an accepted part of the construction process. Aside from the results of component testing, which can be requested prior to construction, on most projects there will be a need to test the installed assemblies to confirm performance of not just the assemblies but the interfaces between the assemblies. The specification documents must include wording to define the extent and nature of this testing on a building-specific basis.

Depending on the size and nature of the mock-ups, performance testing can be undertaken on them. Alternately, testing can be undertaken in the field on selected elements of the construction. Decisions with respect to number, location, and timing of tests need to be made on a project-by-project basis. Testing early in the project is desirable to minimize the cost of correcting problems. Testing should also be conducted throughout the project to help confirm continuity of the quality control efforts.

Figure 6-1 Window Testing

Windows and their integration into the wall assembly should be a primary focus of testing activity. This is equally true if new windows are being installed or if the existing windows are being retained. Testing of the existing windows provides confirmation of acceptable performance of the window assembly and/or identifies repair and maintenance activity that may be appropriate to prolong their useful service lives.

The Cost of Failure

One of the more common concerns between the owner and the contractor is clarity on which party is responsible for retesting in the event that the initial tests fail. This should be clearly stated in the project specifications, but a path for testing and retesting is helpful so that all parties are clear on the intent. Figure - 2 below shows one option for a flowchart of the mock-up testing procedures, retesting requirements, and associated quality control processes that may be required if continued failure pursues.

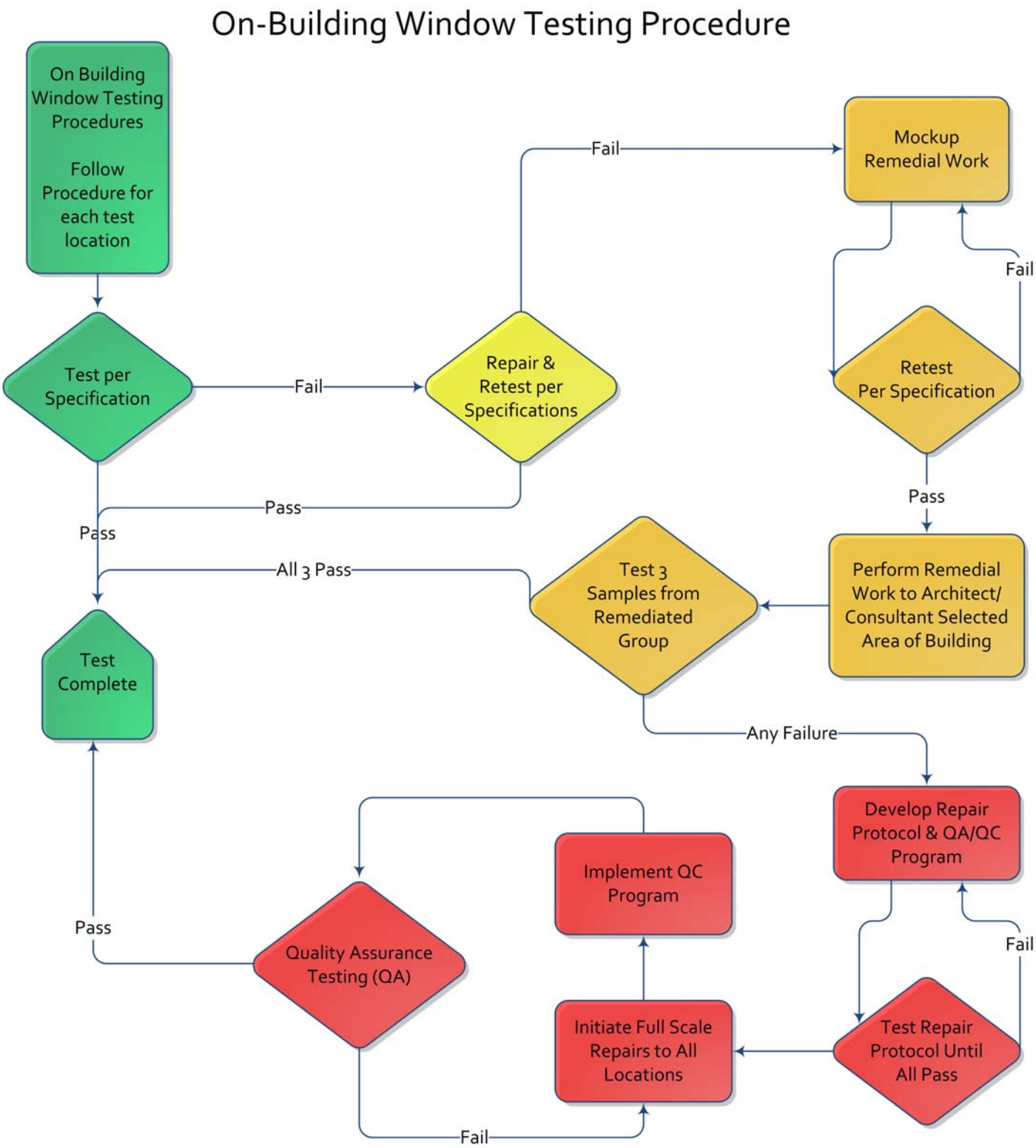

Figure 6-2 Window Test Flowchart

6.5 Cost Tracking

6.5.1 Contractor Change Orders

Although every effort should be made to fully document the nature and extent of the work in the contract documents, some changes during construction are inevitable. Changes may result from a number of causes including unforeseen site conditions, changes requested by the owner or required by municipal authorities, or the need to correct errors or omissions in the drawings or specifications.

Changes in the work, whether they are additions, deletions, or revisions, can only be initiated by the owner issuing a change order or a change directive through the consultant. Change orders and change directives must be signed by the owner.

Clearly Define the Change Order Process Between Owner, Contractor, and Consultant

Changes resulting in increases or decreases to the contract price must be dealt with fairly to all parties. Failure to do so can lead to bad relationships, disputes, and litigation. Owners and consultants must recognize that a contractor is entitled to recover the costs of a change (including the work itself), site overhead costs, office overhead costs, and an amount for profit. Contractors must be aware that owners are entitled to a fair credit for work not completed and that costs for extra work must be fair and justifiable.

Clauses dealing with changes are included in most contracts and, in general terms, they cover the following:

- Increases or decreases in work items already part of the contract
- Changes in the method of installation
- Changes in material selections
- Changes in the circumstances and conditions under which the work is undertaken
- Costs of removal and replacement of any unforeseen work not specifically covered in the bid documents, which cannot be measured or known at the time of bidding.

To minimize the changes to a fixed-price contract, the bid set of documents must include:

- A clear, precise, and defined scope of work.
- Specifications that are without ambiguous clauses and are customized for each project.
- Drawings that are to scale and that clearly show all relevant details.

Consultants must review contractor change quotations as soon as possible and encourage the owners to respond in a timely manner. Delayed decisions can affect the overall schedule and add cost. It is advisable for the consultant to have the contractor keep track of potential change orders that arise during the course of construction for discussion at weekly project team meetings.

6.5.2 Change Order Pricing Methods

In the preparation of the bidding and contract documents, the consultant prescribes methods of handling the cost of unforeseen work. The method of payment for extra work or changes, as well as the percentage of the contractor's fee for each change, must be clearly defined in the contract documents. All of the methods listed below have a place in determining the cost of unforeseen work:

- Payments based on a time and material basis
- Unit price method
- Lump sum fixed costs where a change can be clearly measured

Time and Material

The bid form must make provision for the contractor to include hourly rates of labor for each classification and to advise of the percentage fee that will be added to the net cost of materials and trade contractor invoices. The hourly labor rates should already include the contractor's labor burden cost and fee, so additional fees should not be charged to labor rates. It must be clear in the documents what these hourly rates include. For example: small tools, office overhead, profit, etc. If there is uncertainty as to what is or is not included due

to poorly worded clauses, misunderstandings and disputes may arise during the course of the contract.

Items not often dealt with are the added costs to the contract for site overhead, such as supervision, monthly rental of scaffolding, equipment, and site office telephone. These must be dealt with at the bid stage and are of particular importance when the contract time might be extended due to many change directives. Each relatively small change by itself may not add any significant cost, but when combined with many others the contract time will be extended, resulting in extra costs not covered by the hourly rates.

Unit Price

The bid form must make provision for the contractor to include unit rates for each type of unit price work in a similar manner to the time and material method described above. This method should be used when the type of work can be clearly defined, but not the quantity or extent. A good example is the installation of deck drains to relieve a ponding or a poor drainage situation on existing balconies. The specific drain type, substrate, and membrane may be described, but the exact location and number cannot be determined until each balcony is reviewed on site.

Using unit rates for the replacement of structural components of walls, floor joists, posts, beams, etc., should be avoided and time and materials methods used instead. Replacement of these components often includes other items of shoring, weather protection, and extensive repair of finishes that cannot be clearly defined by the contractor at the time of providing the unit prices in the bid. Unit rates for similar items of work can therefore vary as much as 1000% between different contractors, and the time the consultant and contractor spend preparing changes is considerable.

Fixed Price

This can be used when the extent of the extra work is clearly defined and measurable, often after a large section of the existing cladding has been removed. The contractor submits a lump sum price for the change to the consultant for review, negotiation, and recommendation to the owners for acceptance. The costing of the work and approval by the consultant occurs in its entirety as the work progresses, after the bid process. Contractors should be prepared to submit an itemized breakdown to justify the lump sum if required.

6.5.3 Contingency Allowances

The largest unknown factor in rehabilitation construction is the extent and resultant costs of carrying out structural repairs (of walls, floors, balconies, and support structures) and often the added cost of repairing associated finishes. In an effort to deal with the difficulty of changes and contract time extensions, some consultants have been including a specified number of contingency hours (or dollars) in the base contract with the contractor. These hours are expended by the contractor at the hourly rates identified on a unit rate sheet, which is made part of the contract. This total is then added to the balance of the contractor's bid price. In this way, costs of all bonds, insurance, and site overhead are included in the bid price and provide the contractor and owner with a better understanding of the overall scope of work, size, and value of a project. A further advantage of the inclusion of contingency hours is that the owners benefit from competitive pricing of all unforeseen work being included in the original fixed lump-sum bid.

Adjustments are made based on the hourly costs. Actual hours worked are compared to the contingency hours specified. If less, a credit is given; if more, they are paid for at the appropriate hourly rates.

The consultant should chose a reasonable amount of contingency hours based upon the knowledge gained during the investigation and on experience with similar projects.

Some buildings have been found in much poorer condition than could have been foreseen, placing an additional financial burden on the owners. Contractors

and consultants should keep a running estimate of all change orders carried out and regularly inform the owners of the projected estimated total cost. This will permit the owner to make provisions for extra funds or adjust the original scope of work to meet the owner's ability to pay.

If this method is used, the contractor should maintain daily worksheets identifying all work conducted, including all personnel and hours recorded for the time worked, as well as materials used. The consultant should review and sign worksheets at every site visit. This constant monitoring and ongoing agreement regarding the additional work will result in good assessment of the budget and minimize disputes during the review of the monthly progress draws.

6.5.4 Monthly Budget Forecasts

If the consultant has project management responsibilities as part of the contract, it is advisable that the consultant keep track of the entire project cost for the owner. This forecast may include the following items:

- A base contract amount for the contractor
- Change orders approved to date
- Pending changes
- Contingency allowances
- Consulting fees

The consultant should also prepare a final cost analysis at the completion of the project.

6.6 Closeout Requirements

6.6.1 List of Construction Deficiencies

Throughout the course of construction, the consultant should prepare site visit reports addressing deficiencies in construction that the contractor needs to repair. Copies of these reports are sent to the contractor and the owner. The contractor should repair the deficient work as soon as is practical and to the satisfaction of the consultant. As the consultant completes and reviews the repairs , he or she marks these deficiencies as complete on the list of deficiencies. At the completion of the project, the consultant may be required to prepare a final letter of approval that the rehabilitation work was done according to the contract documents. The jurisdiction issuing the construction rehabilitation permit may require this final letter of approval prior to providing a "final" signature on the permit.

6.6.2 Contractor Closeout Submittals

Toward the end of the construction process, the contractor will prepare a list of the closeout requirements identified on the contract drawings, specifications, and permit comments from the jurisdiction. The closeout submittals provide the owner with the proper information to manage the newly rehabilitated building properly. These items typically include:

- Warrantees and guarantees
- As-built drawings
- Updated lien releases from trade contractors
- Operations and maintenance manuals
- Bonding

6.6.3 Certificate of Completion & Final Payment

Upon completion of the project in accordance with the contract documents, the consultant will prepare the final approval letter and a certificate of completion.

The consultant will approve the contractor's final payment, unless there are any outstanding quality control issues for the contractor to complete. In those cases, the consultant identifies the value of the work remaining and typically withholds 150% of that value as deficiency retention until the work is completed.

OCCUPANT SAFETY APPENDIX

6.7 SAFETY MEASURES FOR BUILDING OCCUPANTS DURING CONSTRUCTION

Consultants should provide a list of basic safety precautions to owners. The list may include the following:

6.7.1 Scaffolding

In many cases, a scaffolding system is essential for access to the building exterior. Many workplace accidents are scaffolding-related.

- Do not walk under the scaffolding. Use access points as directed by the contractors, which are specifically designated for pedestrian traffic.
- Maintain a distance of 10 feet from any scaffolding, especially during work hours. Debris, tools, or equipment may fall from the scaffold.
- At no time are building occupants to climb the scaffolding. Sections may be in a stage of dismantling and not safe.
- Do not remove or adjust any component of the scaffolding. Scaffolding is quite often an engineered system and cannot be safely altered without approval of the design engineer.
- Do not allow other tenants, especially children, to play on or near the scaffolding.

6.7.2 Ladders

Ladders are a source of potential danger.

- Do not climb any ladder used on the site for construction purposes. It may not be secured from falling.
- Do not remove ladders or alter them in any way. A worker may not be aware that the ladder has been altered or left unsecured. It is a requirement of the OSHA regulations to restrain a ladder from falling.
- Maintain a distance of 10 feet from any ladder in case of falling debris.

6.7.3 Debris (loose, flying, falling)

Debris will be removed from the construction site on a continuous basis, but occasionally it will accumulate. It is always a hazard.

- Watch for falling and flying debris. As materials are removed from the building they are sometimes difficult to contain.
- Watch for wood or boards with protruding nails. If rusty nails break the skin, they can cause severe infection.
- Loose debris and materials can be a slipping and tripping hazard. Do not walk on or through accumulated construction debris.

6.7.4 Caution Tape and Signage

These are widely used on construction sites to warn people of potential dangers. Respect all caution tape and signage.

- Caution tape and/or signage will be used to cordon off a danger area for a variety of potential safety reasons.
- A normal route of entry or exit may be cordoned off with caution tape and/or signage to prevent access or egress. Use an alternate route.
- Do not remove caution tape or signage, even after workers have gone for the day. There may still be existing dangers such as tripping hazards, holes, or debris.
- Signage such as "Overhead Hazard" means just that. Beware of what is happening above.

6.7.5 Materials Storage Area

This is where construction materials used to repair the buildings are stored. Some may be hazardous materials, others may be stacked items.

- Do not allow children to play in material storage areas. Hazardous or poisonous materials may be in the storage area.
- Stacked materials such as lumber can sometimes fall, especially after being knocked or heavily jarred. Maintain a safe distance.
- Respect designated storage areas.

6.7.6 Tools and Equipment

Many tools and equipment will be used to repair the building. They can maim or injure if used by unqualified personnel.

- Do not use or borrow tools and/or equipment.
- If a tool or piece of equipment is inadvertently left unlocked after workers have left the construction site, turn it in to the building manager or the construction representative.

6.7.7 Walkways

Walkways will sometimes be rerouted to facilitate construction procedures. Walkways will be restored as soon as possible, but alternate routes are to be used in the interim.

- Do not use walkways cordoned off with signage or caution tape.
- Ensure that emergency exits and access routes are maintained throughout construction or alternate arrangements are implemented.

6.7.8 Waste Containers

Waste containers are necessary for removal of debris from the construction site. They will be present for the duration of the project.

- Do not climb into the waste container. There are nails, sharp wire, hazardous materials, and many other dangers present.
- Do not park in the immediate vicinity of the waste container. Materials and debris are routinely thrown into the container, sometimes missing it. Vehicles parked too close could get damaged.

6.7.9 Privacy

Privacy is a significant concern while construction proceeds on residential buildings. There are a few simple ways to maintain privacy. Keep drapes or blinds closed while work proceeds in your area of the building. There will be times when construction crews may require access into suites to do repairs on drywall and for touch-up painting. These times will be arranged with occupants in advance.

6.7.10 Security

The use of scaffolding will make it easier for people to access all parts of the building exterior.

- During the construction period occupants should be aware of an increased risk of criminal activity.
- Keep doors and windows locked at all times. If suspicious activities are observed, contact the construction representative for confirmation.
- Contact the police if circumstances warrant it.

6.7.11 Areas of Work

During the course of construction, all decks and balconies will likely be dismantled and restored.

- Do not explore these areas while they are under construction. Supporting members may have been removed and/or guardrails may be unfastened and not secure.

6.7.12 Insurance

Building owners should review the insurance provided by the contractor (under the terms of the contract) and consult with the building owner's insurance agent with respect to obtaining additional forms of insurance during the course of construction.

6.7.13 Special Needs

Identify any tenants with special needs that may be relevant to the contractor, such as those needing wheelchair access, those with sensitivity to dust, and those with other pertinent medical conditions or disabilities. It is also very important that children or adults with impaired judgment be closely supervised once construction work commences.

6.7.14 Emergency Accident Procedure

If there is a serious accident during construction, witnesses should follow the procedure outlined below.

A serious accident would be defined as one in which the injured person (worker or tenant) is unable to help himself or herself.

- Before going to the accident scene to help the injured person, assess the area to ensure it is safe.
- Call 911 and state the address.
- 911 will require a brief description of the accident. Tell the dispatcher what is known.
- Try to contact the site first aid attendant and project superintendent.
- If possible, go to the area where emergency crews will arrive and direct them to the accident scene, or have another person do this.

CHAPTER CONTENTS

7 BUILDING ENCLOSURE QUALITY ASSURANCE PROCESS..... 7-1

7.1 Roles 7-1
7.2 The Process 7-2
7.3 Building Enclosure Design Checklist.....7-5

TABLE OF TABLES

Table 7.1 Building Enclosure Design Checklist.....7-6

TABLE OF FIGURES

Figure 7-1 Enclosure Quality Assurance Process.....7-3

THIS PAGE INTENTIONALLY LEFT BLANK

7 BUILDING ENCLOSURE QUALITY ASSURANCE PROCESS

Previous chapters discussed the careful balance of risk and cost inherent in the decisions made in developing a rehabilitation program. The consultant plays an important role in identifying and describing the alternatives available for the rehabilitation process and the owner considers the risks and benefits and ultimately makes decisions regarding the rehabilitation program. There are further steps to minimize the risks associated with any of the selected options throughout the rehabilitation process. These steps are presented here as a framework for a quality assurance program. .

7.1 Roles

The roles of the design team members and the owner team members must be clear. In addition to the traditional team members, this quality assurance process presents a new role of a risk review consultant. The risk review consultant provides a third party perspective on the design, to aid the owner with risk assessment decisions. The following outlines the roles for the prime consultant, building enclosure consultant, owner, and the risk review consultant.

7.1.1 Prime Consultant

The prime consultant's main roles with respect to the building enclosure quality assurance process are to:

- Design in accordance with relevant codes and standards.
- Coordinate the work of subconsultants.
- Follow the design guideline (Chapter 3).
- Provide appropriate information to the risk review consultant.
- Address the risk review comments.

The owner and risk reviewer regard the set of construction documents submitted for review to be the collective effort of the design team for the building enclosure. Therefore, if both a prime consultant and a building envelope consultant (BEC) are involved in the project, it is important that the BEC's comments have been incorporated into the documents or any responses prior to submittal to the risk review consultant. Failure to do this may result in delays in the review process.

It is also important that the design and overall project schedule reflect the timing associated with undertaking the risk review and incorporate changes that may result from the risk review. Schedule delays and increased cost implications resulting from untimely changes to the documents may arise if this is overlooked.

Prior to submission of construction documents for review, the prime consultant should review his or her design in the context of the design guidelines contained in this guide. Proactively addressing variations from this guide can save time in addressing cycles of comments and responses in the review process.

Finally, there is an expectation that sufficient field review and testing, as well as tracking and resolution of deficiencies, will take place to ensure compliance with the construction documents.

7.1.2 Building Envelope Consultant (BEC)

On new construction projects the BEC typically provides specialist consulting to the prime consultant (usually, an architect) with respect to building enclosure performance issues and undertakes supplementary field review and testing during the construction phase.

On building enclosure rehabilitation projects, however, the BEC and the prime consultant are often the same entity. This may not be the case on larger projects where the project scope exceeds building enclosure rehabilitation.

If the BEC is independent of the prime consultant, they should be a fully integrated member of the design and construction team and be involved with the design at appropriate times so that the risk review is based on documents that reflect the BEC's input. The risk review

consultant will review only construction documents that have incorporated the BEC's comments, not BEC comments on design documents.

The BEC is expected to provide sufficient field review, testing and deficiency resolution and tracking services to supplement the prime consultant's services, such that collectively they can ensure general compliance with the construction documents. As the field of building enclosure science remains relatively young, there is often a disparity between the design intent and the contractor's experience constructing similarly designed repairs. This puts a greater emphasis on the field review role to help ensure quality and consistency of construction.

Although in rehabilitation projects the role of the prime consultant and the BEC are often combined, the overall role and expectations of the design team are the same.

7.1.3 Owner

The owner and/or funding agents (collectively referred to as the "owner" for simplicity) are not part of the design team. However, since they are accepting the performance risk, they must assure themselves that appropriate design and construction decisions are being made and that they are not exposed to inappropriate risk. In this context, the owner, through the risk review consultant, will be conducting independent reviews or checks on the design and construction process, as well as the completed construction. The owner will also rely upon reports prepared by the consultants throughout the design and construction process.

The owner's involvement in the design process does not relieve the members of the design and construction team of any of their obligation to meet their statutory responsibilities as well as the minimum design standards outlined in this guide and agreed to with the owner.

7.1.4 Risk Review Consultant

A key part of the process is to engage a third party risk review consultant. This third party should be experienced in building enclosure sciences. The risk review consultant is also not a part of the design team. This person's role is to provide information to the owner to assist in the evaluation of risk. When providing comments on the construction documents and in making observations in the field, the focus is on identifying areas of risk and the nature of that risk. Strictly speaking, the risk consultant does not have a role in developing solutions to address any concerns noted. However, the design team may want to explore possible solutions with the risk review consultant, who does have a responsibility to cooperate and help move the process forward in this regard.

7.2 The Process

The table that follows presents the various phases of the building enclosure quality assurance process and the roles that each entity plays. For simplicity, and to recognize that with many building enclosure rehabilitation projects the prime consultant and building enclosure consultant are the same entity, they are combined on the table and represented as the 'consultant'. For larger projects or new construction projects, reference the corollary guide, where the roles are separated for greater clarity.

The fact that rehabilitation projects deal with buildings that already exist means that there is typically limited scope for changing building form, and as a result there is may not be a need for a design concept meeting as presented in the table. However, for complicated or large projects, this may be required, and is therefore included for reference below.

Building Envelope Quality Assurance Process

RESPONSIBILITY

- ● Primary
- • Secondary
- ■ Consulted

PROJECT PHASES / Risk Review Tasks	Risk Review Consultant	Owner	Prime Consultant (and BEC if applicable)	Other Consultant
Pre-Project Planning & Schematic Design				
Provide Design Team with Quality Assurance/Risk Review Protocol		•		
Design Development				
Undertake Design Development Work		■	●	
Design Concept Meeting	■	•	●	
Construction Documents				
Prepare Construction Documents			●	
Conduct Initial Risk Review	●		■	
Respond to Initial Risk Review	■		●	
Follow-Up on Initial Risk Review	•		●	
Construction				
Conduct Field Review, Mock-Ups, and Field Testing			●	
Conduct Risk Review Site Visits	●		■	
Follow-Up on Site Visits and Submittals	•		●	
Prepare Building Envelope Maintenance and Renewals Plan			•	●
Post Construction				
Review Building Envelope Maintenance and Renewals Plan	●		■	■
Perform Post Construction Reviews	●	■	■	

Figure 7-1 Enclosure Quality Assurance Process

Provide Design Team with This Guide

Clearly, understanding the process and the design expectations is fundamental to the design team being able to integrate the process into the overall design program.

Undertake Design Development Work

The design development work proceeds based on the consultants' design concept, codes, standards, this guide and other industry guidelines in addition to any other owner requirements.

Design Concept Meeting

The focus of this meeting is on proposed building form and building enclosure assemblies. Addressing these issues early in the process will facilitate easier construction document preparation and review.

Prepare Construction Documents

The intent is that with this guide, the Figure 7-1 checklist in hand, and the design concept meeting completed, the preparation of construction documents can precede smoothly.

Conduct Initial Risk Review

The intent of this review is to evaluate building form, assembly, and detailing with respect to building envelope performance risk. The review should be complete within a reasonable time frame (10 business days), but cannot commence until the construction documents are at an appropriately advanced stage of development and incorporate any BEC's comments and have been delivered to the risk review consultant.

Respond to Initial Risk Review

The design team (prime consultant and BEC) will review the initial risk review comments and provide a written response to all of the issues raised. It is possible that some dialogue with the risk review consultant is appropriate prior to preparing the written response.

Follow Up on Initial Risk Review

The risk review consultant tracks all unresolved issues and will follow up with the prime consultant periodically if the issue remains unresolved. Note that it is the risk review consultant's responsibility to ensure that all design issues are resolved.

Undertake Field Review, Mock-Ups, & Field Testing

The prime consultant (and BEC if applicable) will undertake field review, direct and review mock-ups, and oversee field testing as part of his or her quality assurance efforts during construction. The risk review consultant will determine the requirements for submittal of the prime consultant's field review reports and test reports.

Conduct Risk Review Site Visits

The purpose of these visits to the construction site is to verify the effectiveness of the prime consultant's quality assurance procedures as well as to view the construction in progress. Site visits undertaken by the risk review consultant are generally intended to coincide with stages of construction where many of the building envelope assemblies are being constructed. The risk review consultant will provide the necessary information, including construction schedule and progress to facilitate site visits.

Follow up on Site Visits & Submittals

The risk review consultant tracks all unresolved issues he or she noted during the construction phase and will follow-up with the prime consultant periodically if the issue remains unresolved. Note, that the design and construction teams are responsible for ensuring that all issues are resolved.

Prepare Building Enclosure Maintenance & Renewals Plan

A maintenance plan should be prepared in general accordance with the procedures provided in this guide. It can be prepared by a combination of the parties

involved in the project or another agent, but it must be approved by the design team prior to submitting it to the risk review consultant for review.

Review Building Envelope Maintenance & Renewals Plan

This review focuses on ensuring that appropriate maintenance tasks have been identified for all elements of the building envelope, and in particular those components where performance may be sensitive to maintenance.

Undertake Post-Construction Reviews

The goal of these reviews is to confirm that there is no visual evidence of performance problems and that maintenance tasks are being undertaken.

7.3 Building Enclosure Design Checklist

The building enclosure design checklist provides the backbone of the quality assurance and risk review process. It is intended to provide guidance, while at the same time allowing design flexibility and cost-effectiveness. The checklist can be used prior to submission of the design documents for review, thereby minimizing the likelihood of issues arising as a result of the review.

The individual guidelines that specifically address water penetration control are generally applicable to medium and high exposure categories (unless noted otherwise). Less rigorous provisions to control rain penetration may be appropriate in lower-exposure situations.

The design guidelines presented here address moisture management performance issues only. They do not address many of the other functions and performance criteria which the building envelope must meet, such as acoustics, fire protection, and structural issues. The design team must address these issues and integrate design provisions with the moisture management-related provisions outlined in this guide.

The checklist is organized into the following sections:

- General Moisture Control Functions
- Construction Document Preparation
- Walls - General
- Walls - Above-grade, Poured-in-place Concrete
- Walls - Below-grade, Poured-in-place Concrete
- Windows & Doors
- Roofing, Podiums, Decks, & Balconies
- Building Enclosure – Ventilation Interaction
- Mock-ups, Testing, & Field Review
- Maintenance & Renewals Manual

Although not a requirement of the quality assurance process, the prime consultant may find it helpful to submit a copy of the checklist with the 'status' column completed along with the design documents to the risk review consultant. Some sections may not apply to all rehabilitation projects. When this is the case, the consultant may indicate as such with an N/A in the Status column. Similarly, the risk review consultant may wish to use the checklist as a framework for their review response and provide commentary reference notes in the 'status' column.

Table 7.1 Building Enclosure Design Checklist

Element	Guideline	Status
1. General Moisture Control Functions		
.1	Assess exposure conditions for walls, windows and doors. Rain penetration control is the most critical moisture control function. Assessment of exposure conditions is a key starting point to many design decisions with respect to water penetration control strategy associated with walls and windows.	
.2	For full enclosure rehabilitation projects, provide an intentional and continuous air barrier system within the exterior wall assemblies and integrate it with air barriers in other assemblies such as windows, roofs, foundation walls, etc.	
.3	Ensure that air barriers are structurally adequate (supported). For example, reliance on housewrap water-resistive barrier as the air barrier that spans large gaps (e.g. unsheathed areas or spaces between sheathing and framing) is not acceptable.	
.4	Provide appropriate levels of vapor permeability within wall assemblies to reflect interior and exterior design climatic conditions.	
.5	Control condensation and energy performance through the use of insulating material at appropriate locations within the assembly. Avoid thermal bridging in particular.	
.6	Utilize pressure-treated wood for structural elements and all other inaccessible wood located outside the water-resistive barrier. This also applies to wood framing in elements such as balcony columns and divider walls that are located outside the heated perimeter of the building. “Inaccessible” refers to wood elements that cannot be reached without removing an outer cladding.	
2. Construction Document Preparation		
.1	Provide details for all of the typical interfaces between assemblies. They should be sufficiently developed to illustrate the design intent.	
.2	Ensure that the details show the intent for the key atypical details.	
.3	Draw details at a scale that allows the design intent to be clearly illustrated and individual components, layers, and connections to be identified (¼ size minimum, ½ size for key or complicated details).	
.4	Draw details as isometrics if it is necessary in order to show the intent of the completed assembly.	
.5	Maintain continuity of the critical barriers at all interface details.	
3. Walls - General		
.1	Treat wall assemblies greater than 10º from the vertical as roofs.	
.2	Ensure that wall cladding is sufficiently durable to withstand damage from maintenance activities including access equipment such as ladders, swing stages and bosun’s chairs.	
.3	Design cladding and joints to accommodate daily and seasonal thermal movements without permanent deformation or cracking.	

Element	Guideline	Status
.4	Ensure that the water management strategy does not rely on exposed sealant joints or on excessive and unrealistic maintenance practices. Do not rely upon sealant that is exposed to direct exterior moisture, UV rays, or cyclic temperature movements greater than 40°F to function as a part of the water-resistive barrier in medium- or high-exposure situations. It can be used as part of the water-shedding surface or as part of the water-resistive barrier if not exposed and suitably durable products are used.	
.5	Ensure that drainage cavities for rainscreen walls are at least ½-inch deep (1 inch for brick veneer cavities). The cavities are to provide: › Clear drainage path and venting. › Protected fastener penetrations. › Noncompressible support to cladding and accessories. › Minimized bridging across the drainage cavity.	
.6	Provide clear paths in drainage cavities below all details and penetrations.	
.7	Provide a minimum 1:4 slope on all cross cavity or cladding transition flashing.	
.8	Use end dams on all cross-cavity flashing terminations (all cladding types including brick veneer) and at window sill and head flashing.	
.9	Design vent hoods so that water drips away from the building and so that screens can be maintained. Vent systems should be designed so that they can be tied into the building air barrier system.	
.10	Detail wall penetrations so that they are effectively integrated with all critical barriers.	
.11	Give special consideration to ventilation and assembly design in high interior humidity locations such as swimming pools and hot tubs to accommodate large the moisture sources.	
.12	Review the locations of bath and shower surrounds. Where they exist adjacent to exterior walls, consider special precautions to vent these spaces to the exterior.	
.13	Locate transitions between new and existing wall assemblies at protected locations such as under balconies or overhangs.	
4.	**Walls – Above-Grade, Poured-in-Place Concrete**	
.1	Reduce permeability of the concrete surface through the use of water-resistant coating.	
.2	Pressure wash and sack concrete surfaces prior to application of coating.	
.3	Routed out ½-inch by ½-inch all cracks that appear and seal them with caulking.	
.4	Randomly test concrete walls for water penetration resistance prior to the installation of interior finishes. Determine the extent of testing and retesting based on risk associated with building form and configuration as well as results of initial testing.	
.5	Install cut reglets at balcony returns to terminate liquid membrane and allow for transition of elastomeric coatings.	
.6	Place extruded polystyrene (XPS) insulation or spray-in-place polyurethane insulation in immediate contact with interior surface of concrete walls.	

Element	Guideline	Status
.7	If practical with the rehabilitation design, eliminate thermal breaks between the concrete and other conductive building components such as the steel studs and window frames.	
.8	Clamp self-adhesive vertical membrane terminations onto concrete substrates with a termination bar at sufficient spacing to ensure a seal with the concrete.	
5. Walls - Below-Grade Concrete		
.1	Understand the location of the water table. Consultation with a geotechnical engineer may be warranted if below-grade leakage exists.	
.2	Identify existing below-grade waterproofing and dampproofing and develop appropriate water management strategy (interior vs. excavated exterior). Identify risks and limitations of the design.	
.3	Prepare surfaces to receive dampproofing or waterproofing (if excavated) filling bug holes; removing nails, snap ties, and formwork; and filling holes with concrete or mastic as appropriate.	
.4	For below-grade interior rehabilitation when interior space is occupied, install rigid board insulation (one inch of extruded polystyrene) directly against the inside face of the concrete wall. Tape the insulation at all joints to prevent interior air from reaching the concrete wall. Seal all perimeters and penetrations through the rigid insulation with caulking or spray in place foam.	
.5	Use preservative-treated wood wherever wood framing is used within these wall assemblies, and set the bottom plate on a sill sealer gasket to serve as a capillary break. Fiberglass batt insulation can be installed in the stud cavities. Then install drywall over the wood framing with the bottom edge of drywall held 3/8” above the floor slab.	
.6	Drywall should be finished with vapor-permeable latex primer and paint. It is important to allow this wall assembly to dry to the interior, as drying to the exterior is not possible with below-grade walls of this type. Do not use low-permeability vapor barriers such as polyethylene, as they will limit the drying capacity of the assembly and may result in moisture entrapment.	
6. Windows & Doors		
.1	Where glazing is to be replaced, use windows and curtain wall assemblies only in vertical applications.	
.2	Only use horizontal-slider operable vents in widows in low- or no-exposure conditions. This reflects the generally poorer initial performance with respect to water penetration control, as well as the more significant decline in performance that is inherent with sliders.	
.3	Utilize end dams on all window head and sill flashing.	

Element	Guideline	Status
.4	Provide sub-sill drainage for all windows located in moderate- or high-exposure conditions. Sub-sill drainage provides another line of defense for the rain penetration control properties of the window, recognizing that window manufacturing and the in-service performance of windows will not be perfect. Any water that does manage to penetrate through the window sill will be intercepted and drained out of the enclosure at the sub-sill. Similarly, water that penetrates past the interface between the window and wall assemblies will tend to drop down and be intercepted by the sub-sill drainage. Evaluate variations in sub-sill drainage provisions (sloped sill, back dam configurations, etc.) on a case-by case-basis, reflecting exposure conditions.	
.5	Use wood windows and metal-clad wood windows only in low-exposure conditions. Wood windows are typically manufactured with solid sections, and this limits drainage potential through and around the frame. The metal cladding decreases the drying potential of the wood, and the frame is therefore more susceptible to decay from any water leakage that occurs as it becomes trapped by the metal cladding. Using mulled (coupled) joints with these window assemblies introduces a further element of risk. The joints are typically poorly detailed, relying completely on a face-sealed cap plate and butt joints with no sealant for waterproofing. The joints are therefore not well sealed at interfaces with other window components and will open up over time. In addition, the mulled joints make the entire composite window section less stiff, often giving the impression of not being adequate structurally (large deflections).	
.6	Create a rainscreen cavity in spandrel areas of window-wall assemblies that directs all water in the cavity to the exterior over a waterproof moisture barrier. Terminate the waterproofing moisture barrier on a vertical surface, to the exterior of and lapped over the moisture barrier for the element below.	
.7	Locate windows toward the interior portion of wall assemblies, when possible, to encourage "washing" of the window with interior heated air and to have thermal break aligned with the insulting layer in the wall. This maintains warmer temperatures at the surface of the window assembly. This window placement is also better from a water penetration control perspective, since the windows are somewhat protected when recessed.	

Element	Guideline	Status
.8	Review existing locations of doors with respect to an overhang ratio (projection to height) appropriate for the door style (see below). All measurements are taken from the exterior edge of the door threshold. The recommended values are below. Where these don't exist, use higher-performance doors, or add overhangs. Out-swing door:..... 1:4 min Sliding door: ..... 1:4 min In-swing door:..... 1:2 min Double-swing door: ..... 1:2 min Double slider: ..... 1:2 min Wood door:..... 1:2 min Out-swing press steel door: ..... 1:2 min Any door with less than a 1:2 overhang ratio (Out-swing door and sliding doors in the table above) should also meet the minimum water penetration test resistance requirements for windows located in the wall at that location and be verified through field testing. Overhang projection to jamb ratio of all doors should be 1:4 minimum. Exceptions to the above rules may also be made for outward opening high-performance doors with multipoint locking systems.	
.9	Thresholds to be raised a minimum of ½-inch above the exterior waterproofing surface. All surfaces adjacent to the threshold should slope away from door.	
.10	Where skylights are part of the rehabilitation work, no T-bar skylight systems should be used over occupied space. Skylights must be rainscreen design with a fully drained and vented rafter and purlin system.	
.11	Consider reuse of windows for rehabilitation projects when windows meet water penetration performance requirements appropriate for the exposure conditions and are verified through field testing.	
7.	**Roofing, Podiums, Decks, & Balconies**	
.1	Undertake reroofing design in accordance with NRCA minimum guidelines and standards set forth in current editions of the roofing manuals.	
.2	Locate cast planters and other exposed concrete elements over roof or deck membranes on an 8-inch-high cast concrete waterproofed curb. Provide blockouts in the curb for drainage as needed.	
.3	Use a root barrier approved by the membrane manufacturer for planters and pits (to contain roots and protect the waterproof membrane).	
.4	Install waterproofing or roofing membrane up and over the parapet walls.	
.5	Terminate roofing, podium, deck, and balcony membranes on a vertical surface.	
.6	Terminate roofing, podium, deck, and balcony membranes a minimum of 4" above the adjacent finished grade or surface.	
.7	Terminate roofing, podium, deck, and balcony membranes a minimum of 8" above the adjacent membrane surface.	
.8	Cover waterproofing (horizontal and vertical) and roofing (horizontal and sloped) membranes with a drainage mat, or otherwise allow to drain freely.	

Element	Guideline	Status
.9	Elevate pavers above membrane to provide drainage layer. Sand is not considered an acceptable drainage layer. Provide spacers between pavers to allow for drainage. Cut insulation, if used, to allow free drainage to drain.	
.10	Shingle lap wall membrane over roofing, podium, deck, or balcony membrane. Terminate membrane into a reglet and seal with a sealant joint or a double gumlip where no membrane exists above (exposed concrete wall) the membrane single gumlip termination can be used for fully adhered liquid membranes.	
.11	Install gutters after the adjacent wall cladding at locations where sloped roofs and external gutters terminate at a wall. Detail kick-out flashings to deflect water from the roof away from the gutter-to-wall interface.	
.12	Design snow and ice damming control measures for sloped roofs when appropriate. The specific measures can be very building- and climate-specific. Emphasis should be on: › Providing a passive system to prevent sliding. › Providing airtightness to reduce warming at the roof to wall interface. › Separation of the roof from the wall with high heel trusses to improve ventilation. › Raising membrane terminations above likely drift or damming locations: 2 meters (7 feet) minimum inside of line of exterior wall. › Avoiding locating pedestrian spaces below snow and ice flow paths off of roofs. › Raising moisture-susceptible features (window sills) above likely drift locations.	
.13	Provide a minimum 1:6 slope on all cap flashing.	
.14	When remediation allows, design all roofs, decks, balconies, and walkways to slope both the wearing surface and the waterproof membrane away from door thresholds and toward drainage points.	
.15	Provide crickets at all penetrations greater than 12 inches (300mm) in width.	
.16	Where original construction relies upon sheet metal scuppers as primary drainage mechanisms, consider adding clamped membrane floor drains or using direct runoff from the drip edges as the primary drainage mechanism for roofs, podiums, deck, and balcony surfaces.	
.17	Clearly mark drain locations on concrete pavers and in planters so that they are easily accessible for maintenance.	
.18	On conventional roofs (exposed membranes), protect traffic paths with additional wearing surface.	
.19	Do not utilize the metal flashing as the water-resistive barrier except in low-exposure situations. Metal flashing is generally intended to shed the majority of the water and protect a waterproof membrane below.	
.20	Provide a concrete perimeter curb and membrane which extends 4 inches above the upper slab surface for sandwich slab systems.	
.21	Use concealed fasteners for metal roofing systems.	
.22	Fully reinforce all fluid-applied balcony waterproofing membrane installed on wood substrate.	
.23	Install crickets on all balcony/eyebrow corners to divert water flow away from adjacent walls or windows.	

Element	Guideline	Status
.24	Where new framing is used, accommodate frame shrinkage particularly at slopes on balcony surfaces and cladding transitions.	
.25	Attach railings to vertical wall surface or vertical edge of balcony (face-mounted), rather than to horizontal surface mounts.	
8.	**Building Enclosure - Ventilation Interaction**	
.1	Consider redirection of heating so that heat is directed to and reaches the exterior walls.	
.2	Ideally, meet ventilation requirements on an individual dwelling unit basis. This means that each dwelling unit is provided with an independent ventilation system with supply and exhaust directly to the dwelling unit without passing through any other interior spaces.	
.3	Where other interior spaces of a building (corridors, for example) are utilized to deliver supply ventilation air to individual dwelling units, balancing, pressurization, and interior air quality IAQ should be verified.	
.4	Use energy efficient, low noise source exhaust fans (<1.0 sonnes), or remote in-line fans to encourage proper use and discourage occupant tampering.	
.5	Locate/detail ventilation air intakes so that they are not readily blocked by occupants or located close to any exhausts.	
.6	Undertake evaluation of the ventilation system in connection with any comprehensive rehabilitation program. Improvements to envelope assemblies (increased airtightness) have potential to emphasize inadequacies in the mechanical ventilation system leading to increased condensation potential. Some items described above are not feasible with rehabilitation but should be considered for evaluation of functionality.	
9.	**Mock-ups, Testing, & Field Review**	
.1	Develop a plan for mock-ups and testing and describe requirements within the construction documents.	
10.	**Maintenance & Renewals Manuals**	
.1	Prepare/review a maintenance and renewals manual.	

CHAPTER CONTENTS

8 MAINTENANCE, RENEWAL & RESERVE 8-1

8.1 Maintenance & Renewal Overview 8-1
8.2 Design Considerations.....8-2
8.3 Why Maintain? 8-4
8.4 Maintenance Planning.....8-5
8.5 Renewal Planning 8-6
8.6 Maintenance & Renewals Plans - Key Components.....8-5
8.7 Managing Maintenance & Renewals Plans - Key Roles 8-10
8.8 Managing Maintenance & Renewals Plans - Processes 8-11
8.9 Deferred Maintenance 8-13
8.10 Reserve Studies 8-14

TABLE OF TABLES

Table 8-1 Sample Maintenance Table 8-6
Table 8-2 Sample Initial Renewals Plan.....8-5

TABLE OF FIGURES

Figure 8-1 30-Year Life Cycle Costs.....8-1
Figure 8-2 Difficult access for suspended-access equipment. 8-3
Figure 8-3 Plan for access to building perimeter. 8-3
Figure 8-4 Maintenance and impact on service life..8-4
Figure 8-5 Maintenance and Impact on Service Life.....8-10
Figure 8-6 Logistical Process - Maintenance and Renewals Plan Implementation.....8-12
Figure 8-7 Financial Process - Maintenance & Renewals Plan Implementation.....8-13

THIS PAGE INTENTIONALLY LEFT BLANK

8 MAINTENANCE, RENEWAL & RESERVE

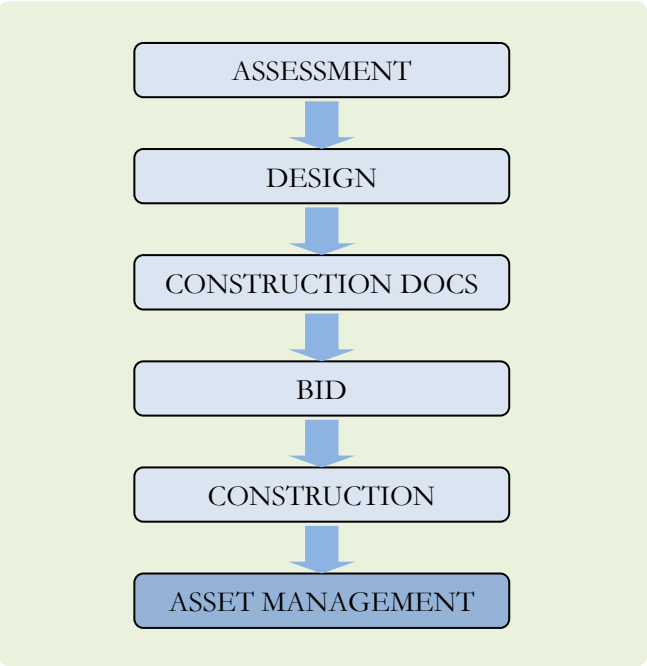

8.1 Maintenance & Renewal Overview

Over the life span of a multiunit residential building, money is expended in 4 fundamental ways:

- **Initial Construction**: This includes the initial cost of constructing the facility, including professional and permit fees, and equipment that is an integral part of the building.

- **Operations and Maintenance**: This includes all costs associated with the day-to-day operation of the facility including building maintenance, custodial services, utilities, landscape and grounds maintenance, security, and other physical plant costs. Examples of routine maintenance activities for the enclosure would include cleaning debris from roof drains and inspecting and repairing exterior sealant.

- **Renewal**: Renewals include all expenditures to replace worn-out components of a facility and are usually for items with life cycles in excess of one year. For example, a roof replacement is expensive but is likely to be required only every 15 to 25 years.

- **Adaptation**: This includes all expenditures required to adapt or add to the building to meet the evolving needs of the users and to address new legislative requirements and standards. An example of this would be retrofitting to meet new fire safety requirements in a multiunit residential building.

The first category, initial construction, represents a one-time expense. The second category, operations and maintenance, while representing a significant part of the building owner's ongoing cash flow, should be relatively predictable and would not change significantly from year to year. (Operations and maintenance costs should still be reviewed so that tasks and expenditures optimize the building's life cycle costs.) The renewals and adaptation costs, on the other hand, are generally large and occur sporadically throughout the life of the facility.

The figure below provides an overview of the relative size of these costs over a significant part of the life span of a building and also includes fees paid to consultants to manage and oversee those work efforts.

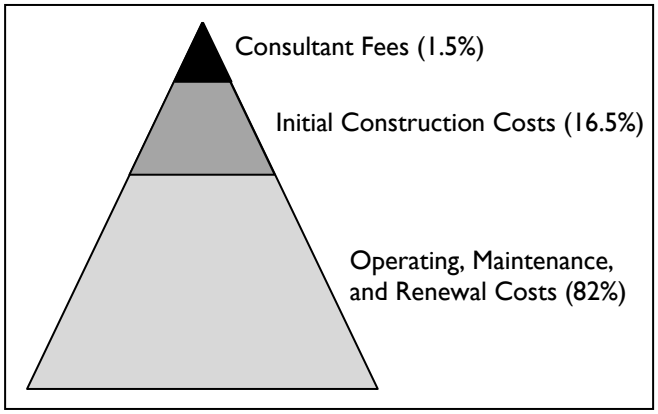

Figure 8-1 30-Year Life Cycle Costs

The figure above illustrates that most of the money expended on a building is spent after the initial construction. Unfortunately, in the case of many residential buildings, the responsibility for the costs of operations, maintenance, renewals, and adaptation are handed over to a different owner group after

construction. In addition, there is often pressure to minimize initial construction costs. These factors remove much of the built-in incentive to optimize life cycle costs that may exist if the developer was also the long-term owner.

The building enclosure is the single most costly system requiring maintenance and renewals during the service life of a typical multiunit residential building. The building enclosure can be complicated, difficult to access, and require specialized skills to maintain. The combination of the high cost and specialized nature of the building enclosure dictates that a plan is needed and that it should be prepared by those knowledgeable regarding the materials, components, and assemblies used.

It is also clear that achieving durable construction and responsible operations, maintenance, and renewals expenditures requires good decision-making during the design and construction phase. A logical extension of this focus during the initial design and construction is for the design team to provide guidance regarding maintenance and renewals so that the owners of the building can continue to manage their building with durability and long-term performance in mind.

8.2 Design Considerations

The consideration of maintenance and renewals issues in the design of the building enclosure for low- to mid-rise, multiunit residential buildings leads to a focus on several issues related to expected service life of materials, components, and assemblies and to accessing the work.

Materials that are difficult to maintain because they are not readily accessible should be selected for longer services lives. For example, structural components are generally hidden behind finishes and are expensive to access for maintenance and therefore should typically not require any maintenance or renewals over the life of the building. It is critical, therefore, that the structure is protected from moisture sources and is durable enough to withstand its environment. Below-grade waterproofing is similarly difficult to access, and therefore membrane selection should be robust, and drainage provisions should ensure that the membrane is not subjected to hydrostatic forces.

For materials and components that are readily accessible, long service lives are less critical. Exterior paint finishes, wood trim boards, and shingles are readily accessible and can therefore have lower service life expectations. However, even when readily accessible, other considerations such as optimizing maintenance costs may dictate material choices with longer service lives. Sealants and finishes are the items typically requiring the most frequent maintenance and renewals activity for the building enclosure. Therefore, utilizing more durable materials can cut down on overall costs considerably. Higher-quality paints and silicone sealants are usually only marginally more expensive than the minimum acceptable solution but can add a lot of value over the life of the building.

The relative service lives of materials utilized within building enclosure assemblies also need consideration. Construction that results in components further from the surface requiring maintenance or renewals more frequently than components closer to the surface of an assembly is flawed. For example, the selection of a flange window assembly that is likely to require replacement in 20 years, where the flange is located behind a 50-year brick veneer cladding, is a poor choice. The brick will need to be removed prematurely in order to address the renewal needs of the window. A more appropriate choice may be a box frame window (without a flange) that will allow removal without disrupting the brick veneer. Alternatively, window perimeter details that incorporate removable trim around the window will facilitate renewal of the window component.

8.2.1 Mid-Rise, Wood-Framed Considerations

As buildings get taller, the components and cladding assemblies have higher levels of exposure to wind and rain load. This impacts the exposure of building components to the weathering effects. Degradation of

coatings, wood trim, and sealant may require an increased level of review and maintenance. The possible greater differential of movement between the cladding and wood structure in these taller buildings, due to wood frame shrinkage, also impacts the performance of joints and interfaces between materials requiring review and maintenance.

Mid-rise buildings are of a height to which ladder access is generally not possible. It becomes necessary to consider access methods that are more common for high-rise buildings, such as suspended-access equipment (swing-stages and bosun's chairs). Alternately, boom lifts can be used to access upper areas of taller buildings.

If suspended-access equipment is intended, then an appropriate roof anchoring system must be installed, and the logistics of moving swing-stages around the building perimeter must be worked out. Highly articulated building features (such as roof overhangs, balconies, and steps in building section) can make this type of access difficult.

Figure 8-2 Difficult access for suspended-access equipment.

Highly articulated roofline makes provision of roof anchors and use of suspended-access equipment difficult.

If boom lifts are to be relied on, access provisions must be planned at the design stage. Parking garage roof slabs must accommodate the vehicle loads, and hard and soft landscape features must allow for movement of the portable lift equipment around the perimeter of the building.

Figure 8-3 Plan for access to building perimeter.

If boom lifts are to be used, capacity of parking garage roof slab and hard and soft landscaping features are critical considerations.

Another example of elements that must be accessed for the purpose of maintenance is dryer vents. They require periodic cleaning due to lint build-up at least once per

year and sometime at greater frequency. The implications of not cleaning dryer vents can be significant, not only in terms of dryer operation, but in terms of enclosure performance and fire safety. Plugged dryer vents can cause back pressure, which can result in warm moist air being forced into the exterior wall assembly. Locating vents where they are readily accessible (on balconies, or at centralized shafts exiting through the roof) will facilitate regular cleaning. However, these exhaust locations can create problems associated with the condensation of exhaust air on colder components of the building enclosure if not discharged to a space where the air is very quickly mixed with outdoor air.

Replacement of insulating glass units (IGU) is typically required every 10 to 25 years over the life of a building. While this work can be done from the exterior, the access setup costs to replace one piece of glazing from the exterior can be very high. Therefore, the use of windows that are glazed from the interior is generally preferable.

8.3 Why Maintain?

The building enclosure requires maintenance and care in operation to achieve its full service life. While the process of gradual deterioration of the building enclosure is inevitable, the speed at which it proceeds can be controlled through the decisions and actions of the owner.

For a building that has been well designed, constructed, and maintained, the elements of the building enclosure are expected to last full, relatively predictable service lives. The condition of elements of the building enclosure deteriorates over time as a result of a variety of factors, such as: weather (sun, rain, wind, snow, or ice), and wear and tear (daily use by occupants of the building). The building enclosure is required to withstand a myriad of forces that impact on the long-term performance of the materials that constitute the building assets. If these forces are left unchecked without the necessary and sufficient intervention from the owners, the risk of unexpected failure may increase and the assets may need to be replaced on a schedule that is contrary to the owner's objectives.

Without adequate maintenance, the building assets will deteriorate faster and their service life may be diminished. The figure below**Error! Reference source not found.** conceptually illustrates the impact that maintenance has on the service life of elements of the building enclosure.

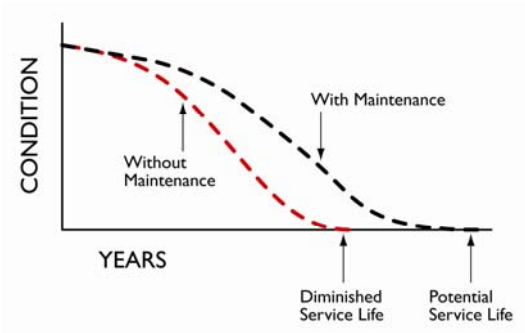

Figure 8-4 Maintenance and impact on service life

A Maintenance and Renewals Plan can best be developed by those most familiar with the building. Therefore, the design team should develop the initial building enclosure Maintenance and Renewals Plan for the eventual owners. This plan should form part of the project completion package and, in addition to the Maintenance and Renewals Plan, it should consist of materials and component manufacturer maintenance information, warranties, and record drawings.

The contents of a Maintenance and Renewals Plan are not standardized or mandated within the property management field or industry. The content is generally best left to the judgment of the design and construction team. However, it will be necessary for the owners to augment or update the content of the initial manual as new or additional information becomes available once the building is placed in service.

It is common for the building's property manager to assume the responsibility for implementing the Maintenance and Renewals Plan. However, increasingly

there is recognition that this role is complex and requires particular knowledge and skills to be undertaken effectively. "Steward" is a term used to represent the party that is responsible for safeguarding the Maintenance and Renewals Plan and for overall coordination, management, and supervision of the maintenance activities. This more complex "steward" role could be fulfilled by a consultant or others who have the necessary expertise.

Over the life of a building, the appearance, performance, and costs of the building enclosure (and indeed all systems that compose the building) are dependent on the implementation of effective maintenance and renewals. This is not a trivial task and requires the owner group to commit to a process of information gathering, planning, funding, and updating on an ongoing basis.

The following sections provide a discussion of the development of a maintenance plan and a renewal plan for the enclosure assemblies. Similar plans could be developed for the entire building and integrated into one overall plan. Maintenance plans and renewals plans are very dependent on each other.

Poor maintenance could mean higher renewal costs or earlier replacement expenditures than would have been required if a more responsible maintenance plan had been developed. It is for this reason that it is critical to update both the maintenance plan and the renewals plan on a regular basis, usually every 2 to 3 years.

8.4 Maintenance Planning

Maintenance of the building enclosure will help to ensure that components and assemblies fulfill their intended functions and realize their intended service lives. A maintenance plan will substantiate the need for resource allocation (work efforts or funding) to preserve the building assets. Failure to maintain can result in unnecessary damage to enclosure components and assemblies, including interior finishes, and reduce the structural capabilities of the enclosure assembly.

Maintenance planning involves describing inspection and maintenance tasks along with establishing schedules for undertaking the tasks. The maintenance plan developed is unique for each building and must reflect the functional characteristics of each enclosure assembly. For example, this guide discourages the use of face-sealed wall assemblies and the reliance on sealant to control exterior moisture sources. The sensitivity of these assemblies to moisture means that they are very dependent on maintenance and renewal activities. The maintenance plan for such an assembly will, therefore, be quite different from a plan designed for a rainscreen wall assembly, which places little reliance on sealant to fulfill its intended functions. The sealant in a face-sealed assembly would require frequent inspection and maintenance (once per year), while the rainscreen assembly may only require inspection and repairs every other year and sealant replacement every ten to fifteen years.

A maintenance plan for some typical assemblies and components of a wood-framed building is provided in Table 8-1.

Table 8-1 Sample Maintenance Table

Component	Recommendation	Time Frame
Wood Siding	Inspect finish on wood siding for evidence of staining, discoloration, fading, chalking, or peeling. Maintenance activities could include repairs to items, creating concentration of water leading to staining, localized refinishing, or cleaning.	Bi-annual
Sealant	Inspect sealant for cracking, loss of adhesion, or bulging. Maintenance work may include replacement of sealant at some locations or addressing excessive joint movements through modification of a detail.	Annual
Windows & Doors	Inspect hardware and weather stripping. Adjust to ensure good operation and fit.	Annual
Exhaust Vents	Inspect exhaust vent screens for lint collection. Clean as required.	Semi-annual

The maintenance plan must reflect the competence of the individual undertaking the inspection of the component. For example, more specific guidance in the form of checklists and resulting actions would be required if a property manager or an untrained resident of the building undertakes the inspection, whereas very little guidance would be required for a professional who is regularly involved in the design, construction, and maintenance of building enclosure assemblies. Ideally, a customized checklist and resulting action list should be created for each building.

Inspection and maintenance activities may trigger renewal activities that will lead to changes to the renewals plan. For example, if frequent hardware adjustment is noted for windows, it may make sense to plan for earlier replacement of the hardware with less maintenance-intensive hardware.

The maintenance plan may also include operational guidance associated with components. In particular, the building's mechanical ventilation system should be addressed, because it can have a significant impact on the performance of the enclosure assemblies. Cleaning the exhaust vents as shown in Table 8-1 is one such example. Another might be to include instructions on when to use the bathroom and kitchen exhaust fans, or instructions on how to keep the interior relative humidity below critical levels. If repeated inspections identify humidity-related damage, this may prompt a recommendation to install humidistat controls on exhaust fans.

8.5 Renewal Planning

During the service life of a building, planning for renewal activities will identify the timing, cost, and nature of the activity, as well as renewal activities required due to premature deterioration of a component. At the time of initial construction, however, the plan will be largely based on theoretical or textbook knowledge of the usual life expectancies of various components and assemblies.

A renewals plan should consider all elements of the building enclosure. Once the renewal needs have been identified, a funding plan can be established. Having a plan of this type allows for the gradual accumulation of the required funding through monthly or yearly contributions and eliminates the hardship and potential surprise of unplanned expenditures. It is usually considered adequate to plan for renewal expenditures that are likely to occur over the next 20 or 30 years. Forecasting beyond that time frame is difficult, and it is unlikely that building owners will start to save for expenditures that will come up later than that.

A renewals plan identifies needs. A Reserve Fund Study (RFS) identifies funding levels to meet the renewal needs. It is becoming common practice to combine these two tasks into an Engineered Reserve Fund or Capital Planning Study done by a qualified group of professionals. The preparation of this type of study involves the same kind of expertise that provided the original design and specification of the assemblies.

Table 8-2 Sample Initial Renewals Plan

Item	Recommendation	Time Until Renewal	Renewal Cost
Roof	Replace roof and associated perimeter flashing.	20 years	$100,000
Stucco Wall Assembly	Clean and paint wall.	10 years	$30,000
Stucco Wall Assembly	Replace sealants at window perimeters.	5 years	$6,000
Windows	Replace insulating glass units.	Phased – to be done as units fail over 10 years, beginning in year 15	$2,000 per year
Doors	Replace door hardware.	10 years	$3,000

At the time of the original construction, the renewals plan is usually summarized in a tabular form similar to the one shown above. The entries provided are examples of what could be incorporated into such a plan. The plan can be made much more detailed if desired. For example, it could include component and material specifications for each renewal recommendation.

As discussed earlier in this chapter, the renewal requirements are very dependent on the maintenance activities as well as the quality of the original design and construction. For this reason, renewal plans should be updated periodically, usually every 2 to 3 years. At these times, the condition of each component can be assessed and the timing and cost of the renewal activities can be adjusted to reflect the actual service condition.

8.6 Maintenance & Renewals Plans - Key Components

As described above, a maintenance plan describes what to do, and when, for maintenance. In this case, the cost is often accounted for in a maintenance or operating budget. A renewal plan establishes activities associated with renewal or replacement, timelines, and the costs often associated with Capital Reserve Plans. The two types of plans, however, are closely linked and can be addressed as stand-alone documents or consolidated into a single planning tool.

A Maintenance Plan (and/or a Renewals Plan) is a checklist of activities organized into summary reports, timeline schedules, and checklists that provide the framework for planning and management of short- and long-term maintenance and renewals activities. The framework will ensure the required tasks are executed in an integrated and cost-effective manner.

In simple terms, the plans identify what needs to be done, provide recommendations on how and where to conduct the work, and when to undertake each task. The plans should include the following key elements:

- **Asset Inventory** - This tool lists the assets associated with the building enclosure, the location of each asset, a brief description, and the asset's current, anticipated, and remaining service life. The inventory should include a photographic example of each asset. Following is an example from a building asset inventory.

Figure 8-5 Maintenance and Impact on Service Life

- **Maintenance and Renewal Plan Timeline** - A timeline tool that lays out the future maintenance and/or renewal events (typically over a 20- or 30-year window) in a fashion that allows the manual steward and building owner to look forward and plan for upcoming maintenance or renewal tasks. A Maintenance and Renewals Plan schedule should classify and consolidate tasks and cycles of activities to allow efficient use of resources and expenditures over the established planning horizon.

- **Annual Maintenance Schedule and Task Checklist** - The checklist tool allows for the manual steward to plan, track, and record information regarding maintenance and renewal work for each year.

- **Forms and Reports -** A series of forms used to record inspections completed, adjustments, or changes required or made to the maintenance and renewal plan, service providers, and work costs.

- **Service Providers and Agreements -** A current list of qualified service providers or maintenance contractors qualified to provide maintenance and renewal work along with any established service contracts.

8.7 Managing Maintenance & Renewals Plans - Key Roles

Depending on the facility and property management arrangement, there are a number of key roles that are important in providing adequate oversight and implementation of a maintenance plan or renewal plan.

8.7.1 The Steward

Selection of a qualified steward of the Maintenance and Renewals Plans is critical to effective maintenance of the building. "Steward" is a term used to describe the party that is responsible for safeguarding the Maintenance and Renewals Plan, and for overall coordination, management, and supervision of the maintenance activities. The steward is essentially the timekeeper and the gatekeeper of the maintenance program. The role of steward might be assigned to a property or facility manager, a building engineer, or other persons.

Depending on the facility management arrangement and staffing methods, the steward must understand the capabilities and level of expertise that the in-house maintenance staff possesses. The steward must know when to outsource necessary expertise to complete the maintenance and renewal tasking defined in the plans.

8.7.2 Role of the Owner

The owner group must take an active role in establishing and implementing Maintenance and Renewals Plan policies. In accordance with these policies, the owner is responsible for financial planning that includes the provision of adequate maintenance budgets and capital or reserve funding to support the needs of these plans.

The owner group will be required to review materials submitted by the steward to deliberate the merits of different courses of action and to choose prudent planning or alternate approaches. The owner is required to oversee and approve any changes or modifications made to the building.

It is also necessary to confirm the steward's implementation of the plans and to participate in periodic reviews of the building assets. The owner must also ensure that updates to the Maintenance and Renewals Plan are made.

The extent of responsibilities of the owner varies depending on the ownership arrangement and the roles and responsibilities of the property or facility managers and the steward.

8.7.3 Qualified Consultants, Contractors, and Service Providers

Multifamily residential buildings and the associated construction assemblies are more complex than single-family homes. Establishing a team of trusted and qualified service providers is important in implementing the intent of a maintenance plan or renewal plan.

As mentioned previously, the steward must understand the capabilities and level of expertise that the in-house maintenance staff possesses. The steward must know when to outsource the necessary expertise to complete the maintenance and renewal tasking defined in the plans.

The steward must therefore identify qualified service providers to conduct the specialized maintenance tasks that are identified in the manual. For example, a qualified roof contractor should be retained to perform recommended roof maintenance rather than the in-house handyman.

Continuity from year to year—as well as the quality, level and type of service provided—should be considered when choosing service providers and establishing contracts or service agreements for maintenance contracts.

Similarly, a working relationship should be established with qualified consultants who can provide assistance associated with various inspection services that are described in the maintenance plan.

With respect to renewal work, it is often appropriate to prepare a detailed bid package for distribution to prequalified contractors. To ensure the best result, research should be conducted into each contractor's capabilities, qualifications, financial stability, and insurance coverage for the type of work to be undertaken.

8.8 Managing Maintenance & Renewals Plans - Processes

Managing the program entails activities such as management and oversight of the process, planning tasks, recoding activities completed, cost estimating and tracking, financial planning, and updating the manual(s).

8.8.1 Logistical Processes

The logistical processes associated with successful Maintenance and Renewals Plans includes establishing the plan, scheduling activities, execution of work, record keeping, reporting, and follow-up review. These processes are often overseen by the steward.

Figure 8-6 provides a visual summary of the process. The key steps in the logistical process are described below.

- **Build the Team:** Identify key contact persons within the owner's team for exchange of information and communication. Identify qualified service providers, contractors, and consultants with skills specific to each type of work identified in the plans. Establish contracts and service agreements with the qualified service providers to perform maintenance and renewal tasks.

- **Coordinate Activities:** The steward reviews, coordinates and schedules the maintenance and renewal activities as described in the maintenance plan and renewals plan.

- **Carry out the Work:** Under direction of the steward, the identified service providers or maintenance staff carriy out the recommended maintenance and renewals tasks.

- **Record Keeping:** All recommended maintenance and renewals task activities are logged to demonstrate the maintenance and renewals work that has been completed. This can be then used as a basis for reporting to owners, stakeholders, lenders, and warranty providers. This record keeping also provides a reference for future planning or adjustments to the existing plan.

- **Update and Review:** During the first few years of the building's life, little is known about the actual in-service performance. As maintenance work and inspections are undertaken, information is gained regarding the actual performance and needs of the building. As a result of the steward's observations and input from contractors and service providers, the manual should be updated periodically. This update should typically be planned for every 2 to 3 years. In addition, it is advisable to update the plans if any upgrades, adaptations, or major changes are made to systems or components of the building.

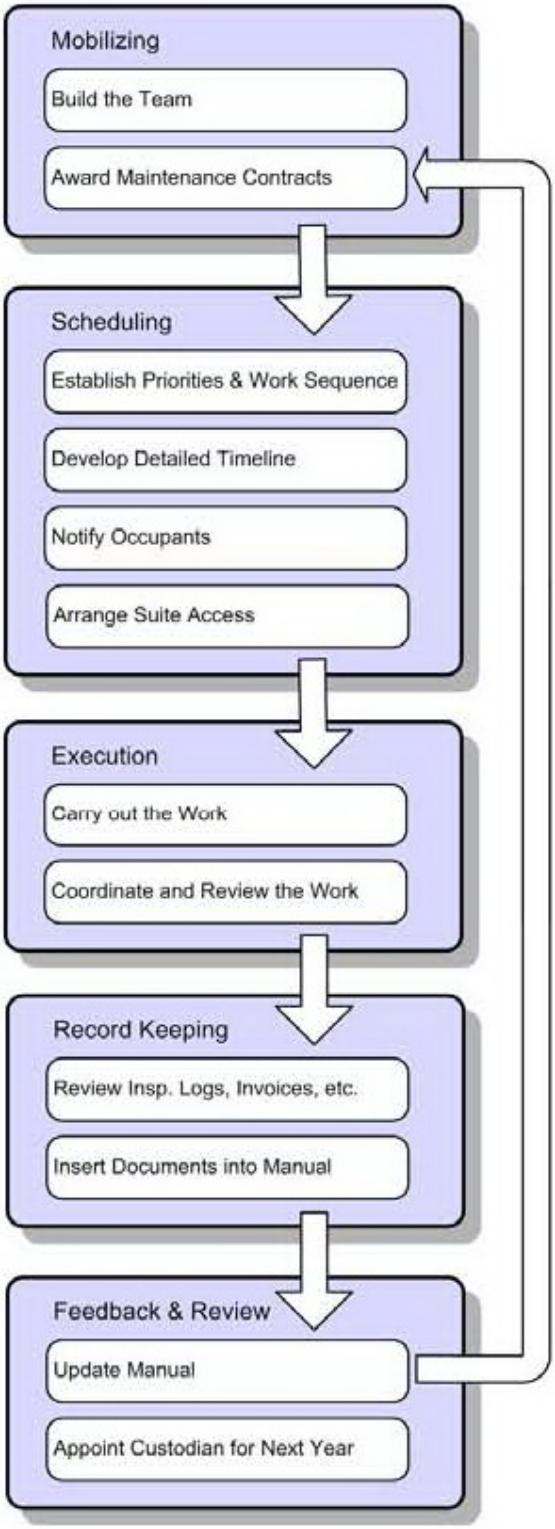

Figure 8-6 Logistical Process - Maintenance and Renewals Plan Implementation

8.8.2 Financial Processes

The steward, in joint efforts with operation managers or property managers must also conduct several financial tasks in implementing the maintenance plan and renewals plan.

The financial process comprises 3 main activities: estimating, budgeting, and financing. The following flowchart provides a visual representation of the sequence of steps in the financial process:

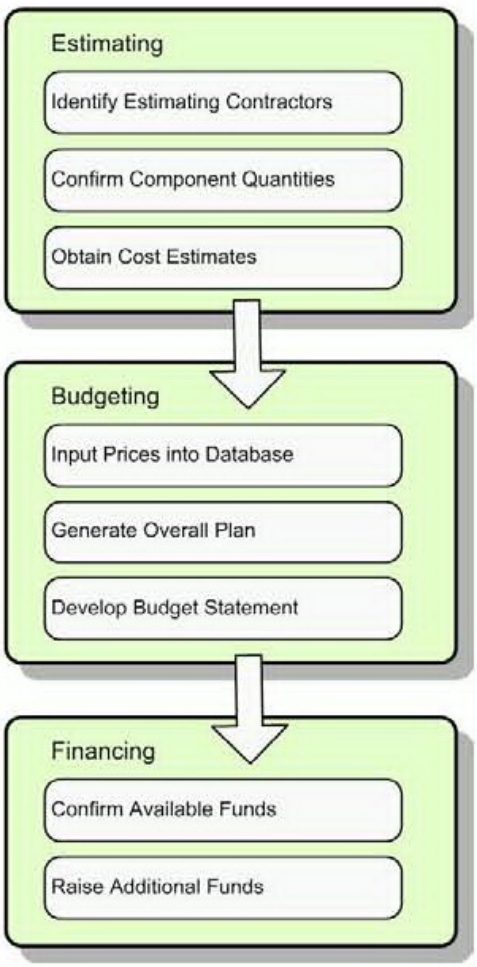

Figure 8-7 Financial Process - Maintenance & Renewals Plan Implementation

The intent of this process is to track costs of the maintenance work to update operating and maintenance budgets with new information in preparation for the next financial planning cycle. Recording of renewals costs is necessary in maintaining and updating capital planning or reserve fund tools that may be in use.

8.9 Deferred Maintenance

Deferred maintenance is any maintenance (or repair) work that has been postponed to a later time. The decision to defer maintenance may be made because of insufficient funds, disagreement on priorities, different standards of care, poor management, or acceptable failure states.

If maintenance is deferred, the owner group can be exposed to the following potential risks:

- **Accelerated Deterioration:** Assets that are not properly maintained will deteriorate faster than those that do not receive routine maintenance. This may result in premature failure or reduced service life.
- **Increased Incidence of Disruption:** Gradual breakdown of performance or failure may introduce discomfort or disruption to the occupants.
- **Compromised Aesthetic Appearances:** Decline in appearances can result in a loss in property value or marketability.
- **Decline of Warranty Coverage:** Failure to properly maintain assets may result in declined warranty coverage in event of a claim.
- **Additional Costs:** Assets that are allowed to deteriorate prematurely may result in the need for early replacement or additional expenses associated with corrections. Early replacement can translate to significant additional costs to the owner.
- **Asset Value:** Declining asset condition or appearance and lack of maintenance records or management can affect property values and resale value.

The owners must ensure that any deferred or backlog maintenance is closely monitored, and its impact on the

owner's finances, legal risk, and operational efficiencies are fully understood.

8.10 Reserve Studies

A reserve study is a companion document and natural extension to the Maintenance and Reserve Plan. The asset definitions and task lists generated as part of the Maintenance and Reserve Plans can be harmonized with and incorporated into a reserve study. This method ensures that changes, adjustments, updates or revisions made to the maintenance or renewal plan will be easily reconciled in the reserve study.

A reserve study is a long-range financial planning tool that establishes projected costs for capital replacement and defines reserve fund requirements for a building over a given planning horizon. Initially the assets are assigned service life projections. Replacement costs are then defined to establish baseline aggregate capital replacement and major future maintenance costs. This baseline cost analysis is then used to established regular financial contribution levels that can accommodate future renewal expenditures.

The primary intents of a reserve plan are to:

- Establish life cycle parameters and replacement cost projections that include escalation factors so that accurate predictions regarding renewal work and associated costs can be made.
- Provide a planning tool that demonstrates financial continuity and accountability for current and future building owners.
- Provide financial guidance so that the owner can make prudent and informed decisions regarding necessary financial allocations for future renewal activities.
- Assist the owner in meeting fiduciary duties relative to long-term management.

The Foundation for Community Association Research provides a number of documents that have generally been adopted by reserve study professionals, property managers, and homeowners' associations as guides for reserve studies. The Association of Professional Reserve Analysts has also adopted these same guidelines as part of their governing documents.

8.10.1 Components of a Reserve Study

A reserve study is made up of two main categories of analysis. The physical analysis is the examination of the physical assets, or building components, that are included in the study. It includes the assets' current condition, service life estimation, and replacement valuation. The financial analysis includes the assembly of cost and financial information including previous reserve fund contribution levels, the reserve fund balance, recommended escalation factors, costs of major maintenance and renewal events, and the planning horizon.

The information collected in the physical and financial analysis is rendered down to establish a yearly reserve fund contribution level or rate, along with projected reserve income and expenses over the established planning horizon.

A reserve study should include the following information assembled into a report format:

- A summary of the building, including the occupancy type, number of units, physical description, and summary of the current reserve fund balance.
- The year for which the study has been prepared.
- An asset or component inventory, complete with description, quantities, current age, anticipated service life and remaining useful life, and current replacement costs.
- A service life report showing the projected replacement year for each component.
- A description of the methods used in calculating the reserve fund and the funding plan.
- Sources used to obtain component repair or replacement costs estimates.

- A description of the level of service to which the reserve study was prepared.

- A recommended funding plan(s) that shows a projection of the reserve starting balance, recommended or identified reserve funding contributions, projected reserve expenses, and the projected ending reserve fund balance for the defined planning horizon (typically 20 to 30 years).

8.10.2 Funding Models

Once the physical and financial analysis is complete, the owner must establish a funding goal and define a strategy for funding the future replacement costs. A funding model establishes a level of funding over the planning horizon and shows the yearly renewal expenditures and yearly closing balance. A number of funding methods and models can be considered.

- **Full Funding** – The goal of the full funding strategy is to attain and maintain the reserve cash balance at or near 100% of the required replacement reserve value.

- **Threshold Funding** – This method establishes a funding goal of keeping the reserve balance above a certain dollar amount or percent of the fully funded value. Depending on the threshold, this is typically less conservative than fully funded.

- **Statutory Funding** – This funding method is based on local statues and typically accounts for a specific minimum amount of reserve as required by legislation or governing statues.

- **Baseline Funding** – The goal of the baseline funding method is to keep the reserve cash balance above zero. While each individual reserve account may not be fully funded, the reserve balance does not drop below zero. This method often requires or relies upon special assessments to augment the reserve funding in order to finance the required work.

The level of funding chosen by an owner for the reserve fund is influenced by a number of factors. In order for the study to be useful and meaningful and to avoid having it dismissed as being unrealistic in its expectations, the owner must first establish priorities. The following are some key factors that an owner must consider when establishing a reserve funding level:

- **Special Assessments or Additional Capital Contributions**: - An owner may wish to establish his or her tolerance for the risk of cash contributions or special assessments and define criteria that will meet his or her goals. Lower funding levels result in higher risk for additional contributions beyond the yearly reserve contribution, while higher funding levels result in a reduced risk for additional cash contributions.

- **Financially Manageable**: An owner will need to identify a funding level or yearly allocation that is manageable and tolerable.

- **Closing Balance**: The planning window is a "moving target" with regular reserve fund updates necessary and an ever-changing list of renewal events. As a result, a sound funding model should include a reasonable closing balance at the end of the planning window to provide funding continuity moving forward in the future.

- **Percentage of Full Funding**: The percentage of full funding is an indicator that a higher or lower level of funding has been chosen in planning. The percentage of full funding is an indicator of overall health, risk, and financial planning.

The challenge for any owner is to find an appropriate yearly allocation or funding level that matches the owner's tolerance for risk without becoming excessively taxing.

A reserve plan is not a static document and must be updated periodically to reflect work that has been done, work that has been deferred, the floating timeline, and changes in economic factors (inflation and replacement costs, etc.). Some jurisdictions recommend a reserve study be updated on a yearly basis. As a baseline guide, the reserve study should be revised or updated on a 2- to 3-year cycle.

Key Visual Symptoms of Deficiencies

Visual Symptom	Possible Causes and Implications	Photographic Reference
Stains or fungal growth on wall cladding	Possible Causes: Excessive exterior wetting Lack of drying capacity Leakage through failed coping Leakage through adjacent details Possible Implications: Moisture behind cladding Damage to underlying structure	
Mold, stains, or wetting on interior drywall finishes	Possible Causes: Leakage from exterior Lack of ventilation High interior humidity Condensation Possible Implications: Concealed damage Allergen exposure (mold spores)	
Staining of walls near grade level	Possible Causes: High grade at walls Sprinklers that wet walls Landscaped low areas that collect water Site walkways that bury walls Possible Implications: Water leakage to interior / crawl space Damage to sill plates Damage to other concealed structure	

Visual Symptom	Possible Causes and Implications	Photographic Reference
Uneven, bulging, warped cladding Back-sloped flashings	Possible Causes: Wood frame shrinkage Possible Implications: Moisture behind cladding Excessive wetting Structural insufficiency	
Deteriorated wood trim around windows, belly-bands, corner boards, or similar	Possible Causes: Excessive wetting Poor drying capacity Improper material preparation (unprimed wood) Improper material use Flashing failures Sealant Failures Possible Implications: Moisture behind cladding Deteriorated materials	
Warped, misaligned, broken, or otherwise compromised window frames (broken frame in adjacent photograph)	Possible Causes: Wood frame shrinkage Damage during storage or construction Abuse Possible Implications: Water leakage Deteriorated materials Air leakage	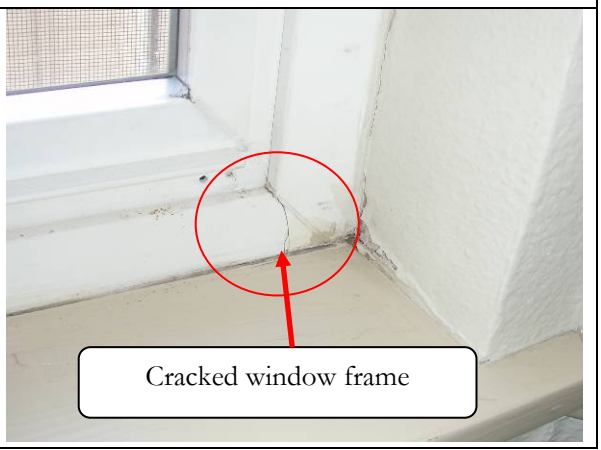

Visual Symptom	Possible Causes and Implications	Photographic Reference
Stains below gutter-to-wall or other similar wall interfaces (parapets, partition walls, etc.)	Possible Causes: Blocked downspout Undersized drain area Improper flashing Lack of deflection flashings at roof Possible Implications: Water leakage behind cladding Damage to underlying materials	
Blisters, wrinkles, or bubbles in low-sloped roofing membranes	Possible Causes: Improper installation Building movement Thermal cycling Possible Implications: Roof membrane failure Wall base flashing failure Penetration failure Water leakage	
Extensive complex architectural details, especially complex roof lines and wall intersections	Possible Causes: Design Possible Implications: Lack of sufficient or appropriately installed underlayment flashings Poor drainage	

Visual Symptom	Possible Causes and Implications	Photographic Reference
Sealant failure	Possible Causes: Improper installation Lack of maintenance Inappropriate sealant geometry Substandard sealant quality Possible Implications: Water leakage behind cladding Air leakage	
Stained soffits below balconies or pop-out bays	Possible Causes: Membrane failure Base flashing deficiencies Lack of drip edge flashings Poor exhaust vent discharge through soffit Possible Implications: Moisture behind adjacent cladding Air leakage into soffit Material damage Structural damage	
Cracking on stucco or EIFS cladding	Possible Causes: Unanticipated building movement Lack of expansion/contraction control Possible Implications: Water leakage behind cladding Aesthetic concerns	

Visual Symptom	Possible Causes and Implications	Photographic Reference
Towels or buckets on window or door sills	Possible Implications: Interior water leakage or condensation Air leakage	

Table 2B-1 Commonly Problematic Details

ROOFS

ROOFS		
REF#	**Detail Description**	**Common Contribution to Moisture Problems**
R1	Menbrane Patches	Patches often debond and allow water to reach below the roof membrane.
R2	Surface-Mounted Flashings	Face sealants deteriorate and water reaches behind surface-mounted flashings.
R3	Exposed Fasteners on Flashings and Copings	Exposed fasteners provide direct water leakage paths, which are commonly detered by use of sealants. These sealants debond frequenctly and require significant maintenance.
R4	Penetration Flashings (e.g. vent stacks)	Preformed or field-formed flashing boots and their related top edge terminations are common leak areas. Often, relative movement between the roof and the penetration can tear the membrane base flashing.
R5	Roof Drains	Membrane terminations into drain clamp rings often fail when water backup occurs. Clamp rings should be tight and caulked. Some drains do not include clamp rings and rely on embedded glues and seals. These are common failure points.
R6	Blisters, Wrinkles, and Bubbles	On exposed low-sloped roof membranes, blisters or other similar conditions are often associated with deficient installation techniques. These blisters may be water-filled or air-filled, depending on their nature. Membrane irregularities reduce the lifespan of the membrane, are subject to early failure, and are symtomatic of failure.
R7	Excessive Moss Growth	On sloped shingle or tile roofing, undermaintained moss growth will reduce the lifespan of the material and can often lead to premature degredation and failure.
R8	Thermal Expansion and Contraction	Especially with long runs of metal flashing, thermal movement can tear open joints or fracture sheet metal. This can lead to water intrusion at fasteners, joints, etc.
R9	Lack of Underlayment at Copings	Sheet metal copings typically allow some degree of water leakage through the joints. Especially where standing seams are not used, a lack of membrane underlayment is a common contributor to water leakage with the parapet or wall below.
R10	Membrane Shrinkage	Often specific to EPDM membranes, shrinkage can cause "tenting" at inside corners, which can lead to membrane failure. Of particular note is when this occurs below sharp-edged pavers.
R11	Gutter Kickout Flashing	Where gutters terminate at rising walls, stepped rake flashing should terminate with a shaped flashing to direct water into the gutter, rather than allowing water to drain into or onto the building wall below.
R12	Roof-to-Wall Flashing	Where roof eaves intersect with walls, properly lapped and intergrated weather barrier underlayment is critical to preventing water on the roof from entering behind wall cladding.
R13	Blow-Off	Windblown shingles or ballast should be noted for maintenance reasons. On shingled roofs, blow-off can damage the underlayment.
R14	Stepped Parapet Interfaces	Where parapets change elevation, it is common to see a lack of underlayment saddle flashing.
R15	Chimney Interface at Roof	Often not flashed correctly, stepped rake flashing, kickout flashings, and uphill diverters often result in water leakage.

WALLS

Walls		
REF# / Figure	Detail Description	Common Contribution to Moisture Problems
	Generic	
W1	Sealant Material	Sealants deteriorate and require regular maintenance. Lower quality materials (acrylics, some urethanes, blends) can crack or craze within the first few years of service (as early as 2 to 5), which will lead to failure and subsequent leakage. Sealants fail either by adhesive or cohesive mechanism or by chemical breakdown and reversion.
W2	Sealant Geometry	Sealants installed into small (<1/4 inch) gaps will likely fail prematurely due to lack of proper geometry. One very common location for this to occur is at trim to window joints. Sealants should be reviewed for joint design, joint sizing, joint spacing, and joint backing.
W3	Back-Sloped Flashings	Back-sloped flashings allow ponding and can direct water behind cladding.
W4	Unprimed Wood Trim	Unprimed wood trim will deteriorate prematurely due to water wicking, especially white wood species.
W5	Dryer Vent Details	Vents must be air-sealed to ducts and properly flashed to weather barrier. Air leakage from dryers into wall cavities often causes severe deterioration of underlying materials.
W6	Gaps or Cracks in Cladding	Gaps or cracks in the cladding allow water infiltration.
W7	Plumbing and Other Miscellaneous Penetrations	Improper flashing at the weather barrier allows water infiltration.
W8	Planter-to-Wall Interface	Planters adjacent to building walls are often not well-flashed, especially where concrete planter walls abut the building wall. Planters may also be sprinklered, which can add to regular wetting of the building elements.
W9	Guardrail-to-Wall Interface	Fastener penetrations, rail interuption of siding, and lack of membrane flashing allow water ingress
W10	Partition Wall-to-Building Wall Interface	Unit partition walls are often not appropriately flashed at the building wall interface, and especially where the wall cap terminates at the building wall. Lack of or inadequate flashing allows water ingress.
W11	Pop-Out Bays	Window bays are often extended beyond roof overhangs and subsequently are subject to more wetting. Further, various framing techniques often allow bay walls to move independantly of the main building wall, putting stress on interface detailing. Bays often include a significant area of glazing.
W12	Above-Grade Foundation Flashing	Termination of wall clading to foundation flashing often allows water ingress to sill plates.
W13	At-Grade Cladding Termination	Sheathing is often left exposed at the underside of cladding and can become deteriorated from rain or sprlinkler bounce-back.
W14	Scuppers	Scupper drains through parapet walls are often not integrated with weather barrier and can leak into wall cavity.
W15	Horizontal Architectural Elements	Belly bands, sloped brick, and other similar horizontal elements often trap water in the drainage plane if cross-cavity flashings do not exist or are not properly integrated.

Walls (cont)		
REF#	**Detail Description**	**Common Contribution to Moisture Problems**
	Generic	
W16	Material Transitions	Any time two cladding materials interface, there is the increased potential of leakage due to flashing discontinuity, increased number of fasteners, etc.
W17	Horizontal Flashings Interuppted by Vertical Trim	Especially at corner boards, horizontal belly-band, or similar flashings that terminate at vertical trim often lack end dams and allow water to reach behind trim and deteriorate underlying materials.
W18	Pot Shelves	At windows and doors, pot shelf details result in almost horizontal walls that collect water and deteriorate weather barriers below. These should be detailed to be like roofs.
	Lap Siding	
W19	Warped Boards	Warped boards can either be indicative of poor installation or framing, which can lead to water intrusion, or can be resultant of water intrusion from above that is causing damage from behind.
W20	Unbacked Butt Joints	Butt joints in lap siding require backing or caulk to prevent water intrusion.
W21	Overdriven / Underdriven Fasteners	Can cause pop off of panels, wind blowoff, or other siding damage.
W22	Unprimed Back of Siding	Unprimed wood can deteriorate from the back side, or in the case of cedar, take on water that can cause paint blistering on the surfaces (especially on south elevations with sun exposure).
W23	Improper Fasteners	Use of non corrosion-resistant fasteners can lead to corrosion and attachment failure.
W24	Siding Butted Directly to Windows	Where a trim element is not used, lap siding butted to window frames is often associated with failed sealant joints and excessive water intrusion at jambs.
	Board and Panel Siding	
W25	Direct Applied Over Weather Barrier	Board siding directly applied over weather barrier does not allow adequate drainage, and minor leakage can deteriorate underlying materials quickly. Also, condensation behind board siding is common, as the board does not allow any ventilation between it and the weather barrier.
W26	Butt Joints (or Battens)	Board joints are difficult to seal and often are sources of water ingress. Battens often cover the joint but do not protect well from water intrusion.
W27	Lack of 'Z' Flashing at Horizontal Joints	'Z' Flashings are required by most board manufacturers and are critical at limiting water ingress at horizontal joints.
	Cement Plaster (Stucco)	
W28	Horizontal Control Joint Butt	Especially at outside corners, joints in stucco accessories are common water entry points.
W29	Vertical Joints Interupted by Horizontal Joints	Vertical control joints should bypass horizontal ones (unless horizontal elements are through-wall expansion style with flashing). Horizontal interuption of vertical crack control accessories trap water and can direct it to the interior.
W30	Excessive Cracking	Stucco is prone to cracking, but excessive cracking allows water ingress. This can be especially problematic at re-entrant corners at windows or other penetrations.
W31	Corrosion of Metal Accessories	Metal corrosion can lead to cracking, debonding, and other failure of stucco cladding. Corrossion is a common sign of excessive water ingress (and may also be due to a corrosive enviornment, i.e. - saline exposure).

Walls (cont)		
REF# / Figure	**Detail Description**	**Common Contribution to Moisture Problems**
	Metal Siding	
W32	Dissimilar Metals	Flashings, Fasteners, Siding, etc. Where dissimilar metals contact, galvanic reactions can cause corrosion.
W33	Open Joints	Unless soldered or welded, metal siding typically has many open joints at corners, miters, laps, joints, etc. These openings are difficult to seal and often admit water.
W34	Lack of Expansion / Contraction Control	Metal moves with temperature much differently than the wood framing and requires care.
	Masonry Veneer	
W35	Clay Masonry (Brick) Growth	In older buildings, brick growth can cause significant shifts of cladding, resulting in cracking and subsequent water intrusion (or structural failure). Review of vertical expansion joints often provides good indication of growth or shift.
W36	Concrete Masonry Shrinkage	Concrete masonry shrinks over time and can cause cracking in mortar joints or masonry units.
W37	Grout Degredation	Grout can loosen and degrade with weathering and age. Older buildings may require pointing work to prevent further degredation, which can be both a structural and water intrusion concern.
W38	Through-Wall Flashings	Flashings should exist above windows (lintels), over horizontal protruding elements, and over other shifts in the vertical wall plane. Flashings require appropriate lapping (min. 6 inches with sealant) or joinery (flat lock seam, etc.). Lack of appropriate joinery will admit water behind flashings. Lack of end dams at flashings allow water to run behind cladding and into the wall cavity.
W39	Lack of Weeps	Masonry veneer bases should always include weeps (above flashing lines) to allow water to exit. Blocked cavities (mortar droppings) or weep tubes can allow backup of water.
	Vinyl Siding	
W40	Open Joints	Vinyl siding is typically loose fit and "zipped" together. Joinery allows significant amount of water behind it, especially at end closures, lineal stops, etc. Joints near windows or other wall penetrations should be carefully inspected to determine the extend to which water is entering.
W41	Hard-Nailed Siding	Vinyl siding requires ability to "float" over the backup. When nails are set too tight, this prevents movement. This also occurs where nails are set away from predrilled, slotted holes.
W41	Material Movement	Vinyl has a high coefficient of thermal expansion/contraction and commonly moves significantly with temparature shifts, resulting in applied stresses to sealant joints, which can lead to sealant failure.

WINDOWS AND DOORS

Windows and Doors		
REF # / Figure	**Detail Description**	**Common Contribution to Moisture Problems**
WD1	Lack of Head Flashing	Head flashings direct water from within the cavity away from the top of the window and also limit water on the face of the cladding from dripping directly onto the window frames. Head flashings without end dams can direct water within the cavity onto the jamb and can result in water intrusion.
WD2	Lack of Sub-Sill Flashing	Sub-sill flashings should extend below the window frame and include upturned end and back dams. A lack of sub-sill flashing is the most common cause of water intrusion at windows and doors.
WD3	Flush Thresholds on Doors	Doors with accessible compliant thresholds often admit water either between the sash and threshold or below the threshold, where flashings are often missing. Even where thresholds are not flush, this is the most commonly problematic detail with doors.
WD4	Lack of Flashing at Door Jambs	Like windows, door flashings should extend to the inboard at rough openings. Due to framing schedules, this often is overlooked.
WD5	Below Operable End of Horizontal Sliders	Horizontal sliders retain water in the sliding track and often do not effectively weep this water to the exterior.
WD6	Below Vertical Field Mulled Windows	Field mulling often results in incomplete flashing and incomplete weep/drainage paths. Water accumulation and leakage at the base and below vertical mullions is common.
WD7	Below Horizontal Mullions	Where horizontal mullions separate two window units (or door with transom above), water often accumulates in unwept mullions and leaks to the jamb side.
WD8	Bathroom Windows	Water from condensation or showers often leaks through window sills within bathroom areas.
WD9	Mitered Corners	Aluminum and fiberglass windows rely on sealants at mitered corners. These often leak over time as windows shift and rack. Vinyl windows have welded corners, which can often crack with age.
WD10	Warped Vinyl and Broken Spring Balance	Vinyl windows will warp and sag with age and temperature fluctuation. Warped frames become difficult to operate and can lead to broken spring balances.
WD11	Tightly Butted Trim	Window trim that is tightly butted to the frame will often prevent expansion and contraction and put excessive stress on the frame, causing further cracking, breaking, and difficulty with operation.
WD12	Lack of Air Seal	Lack of air seal can result in significant air leakage and moisture movement between window frames and wall framing. Lack of insulation at these gaps can result in condensation forming around window frames in colder climates.
WD13	Worn, Torn, or Missing Gaskets or Seals	Gaskets, tapes, and seals are often the final barrier to water and air leakage at windows. Especially with lower-end residential line windows, these weather seals need regular inspection, maintenance, and replacement.
WD14	Wood Rot	Wood rot often results in excessive water intrusion.
WD15	Metal-Clad Wood	Joints in metal cladding allow water ingress between the wood frame and metal cladding, which can result in early degredation of the wood frame and sash members.

BALCONIES AND DECKS

Balconies and Decks		
REF# / Figure	**Detail Description**	**Common Contribution to Moisture Problems**
BD1	Saddles at Deck-to-Wall Transitions	One of the most problematic details on wood-framed buildings, these transitions require careful saddle flashing, both at the cladding plane and at the weather barrier plane. Lack of transitional detailing causes water to reach behind cladding and deteriorate the building materials there.
BD2	Cantilevered Support Members	In conjuction with the above, cantilevered support members that penetrate the wall plane create additional detailing difficulties that often result in water migrating back through the member penetration.
BD3	Ledger Flashing	Lack of adequate ledger flashing allows water to migrate behind the cladding. This is especially problematic at door thresholds.
BD4	Fluid-Applied Deck Membranes	Fluid-applied membranes are subject to incredible stresses at plywood deck joints, wall transitions, and edge detailing. In addition, mechanical damage from patio furniture and foot traffic exposes these membranes to extreme conditions. All material transitions should be reinforced (e.g., edge metal, joints, etc.).
BD5	Top Rail-to-Wall Interface	Often ineffectively flashed, this penetration is a common water intrusion point.

AT- AND BELOW-GRADE

At- and Below-Grade		
REF# / Figure	**Detail Description**	**Common Contribution to Moisture Problems**
BG1	Siding at Grade	Siding often becomes burried by grade change at planting areas. This will damage siding and underlying materials. Water tends to wick up gypsum and plywood sheathing that is exposed to the underside of siding.
BG2	Foundation Waterproofing Termination	Often terminated below grade, foundation waterproofing can become damaged at its top edge termination. Lack of termination bars exacerbate this problem.
BG3	Stepped Foundations and Burried Sill Plates	Framed walls at stepped foundations can become burried below concrete flatwork. Sill plates below concrete flatwork will deteriorate with wetting. This also commonly occurs at recessed entries, where accessible-compliant flatwork is sloped to meet door thresholds and burries both sill plates and often the base of the siding.
BG4	Horizontal Waterproofing Termination	Where horizontal waterproofing exists (plaza decks, etc.), vertical upturned terminations are often incomplete, especially at door thresholds, garage doors, etc.
BG5	Inadequate Footing Drainage	Inadequate footing drainage can cause leakage into below-grade basements through cracked foundation walls.

Figure 2B-1 Commonly Problematic Details – Graphic References

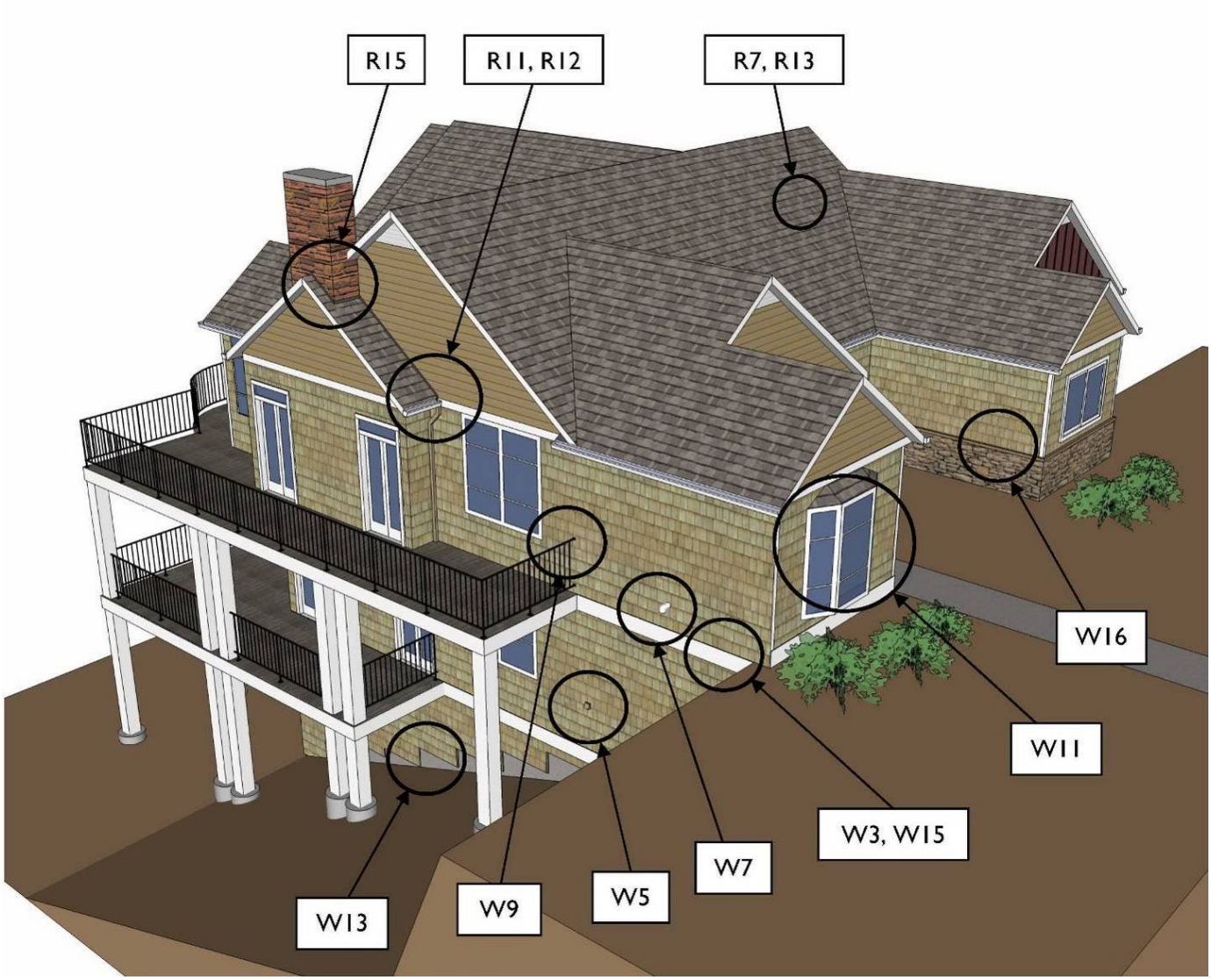

Figure 2B-2 Commonly Problematic Details – Graphic References

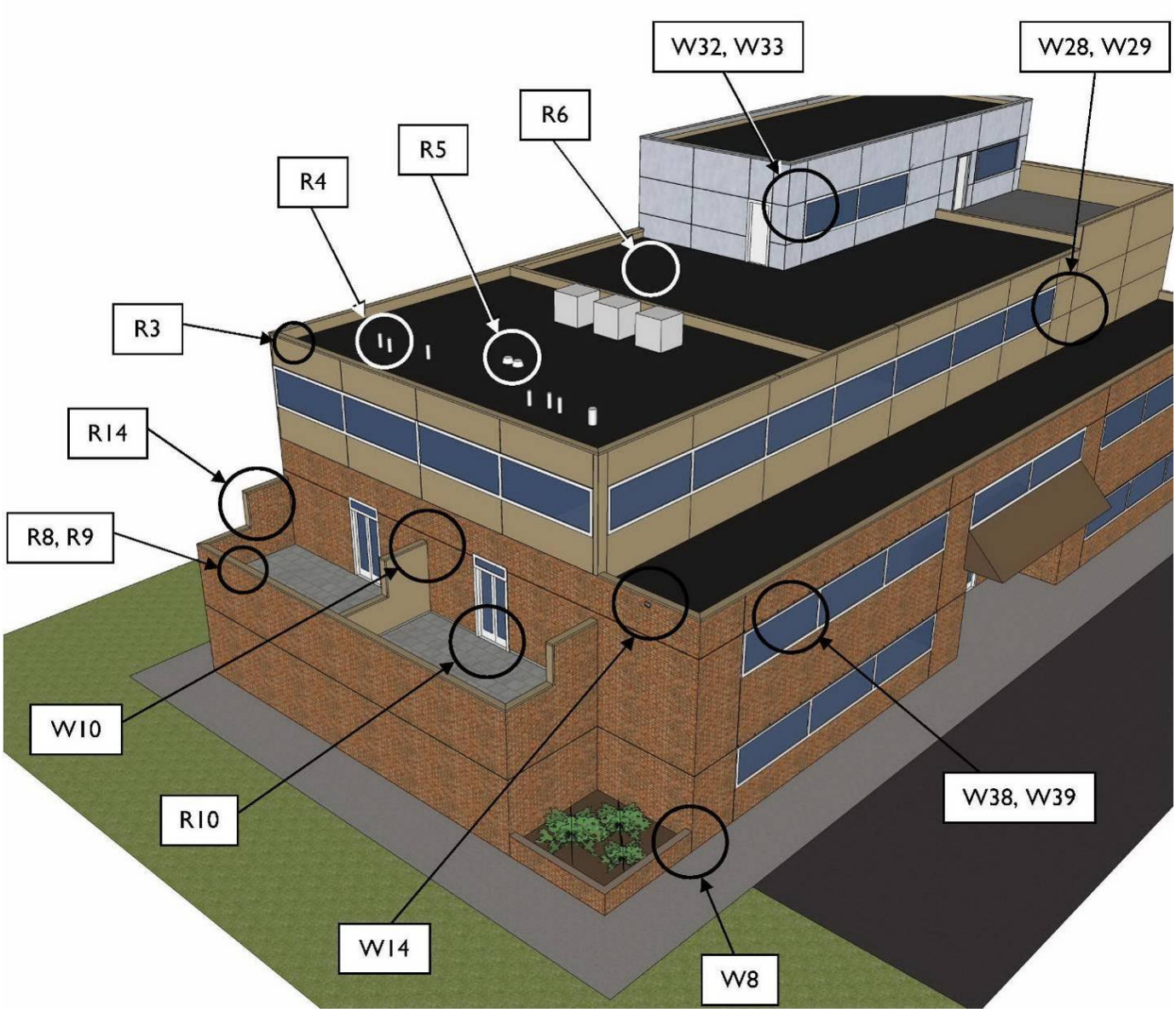

Figure 2B-3 Commonly Problematic Details – Graphic References

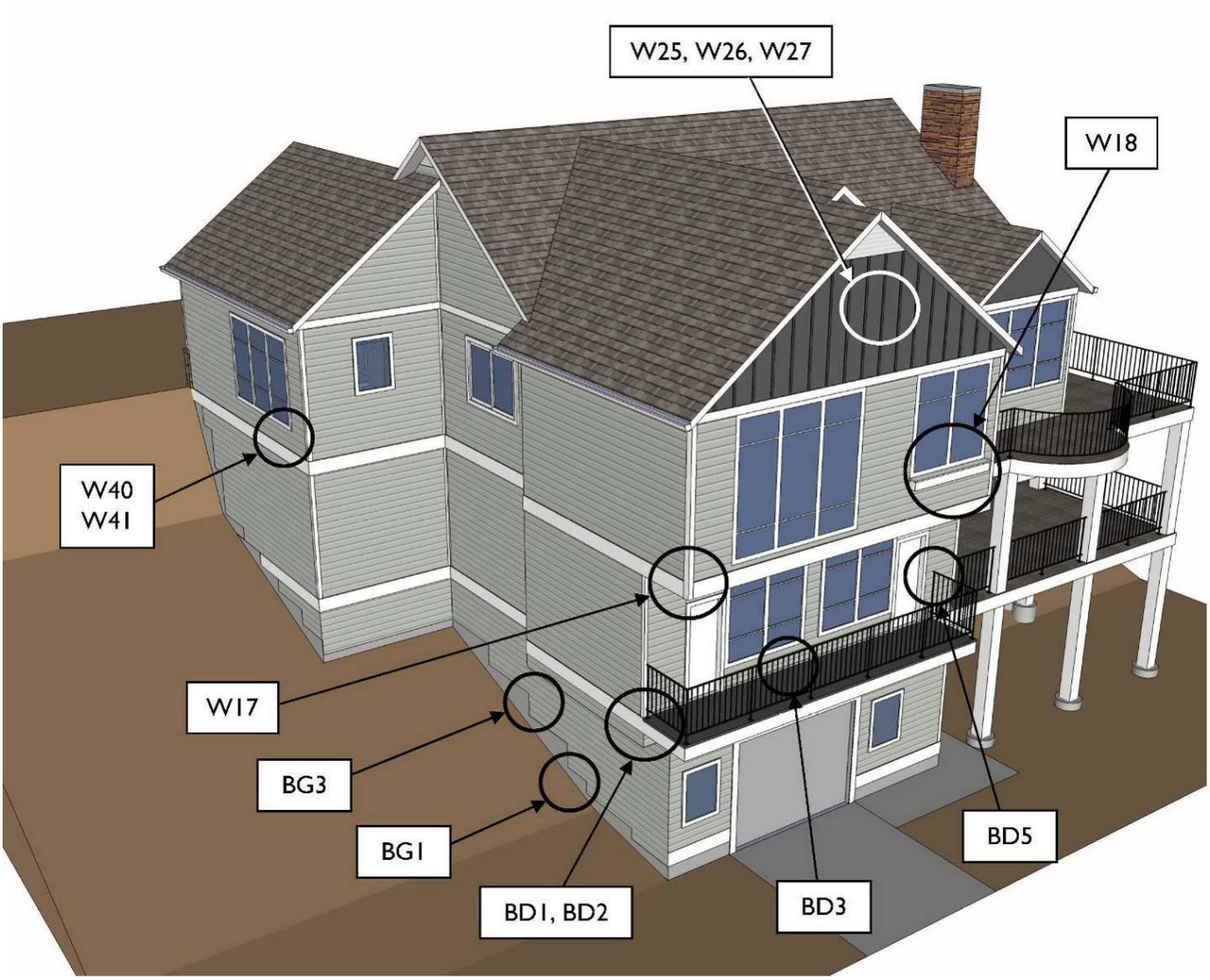

Figure 2B-4 Commonly Problematic Details – Graphic References

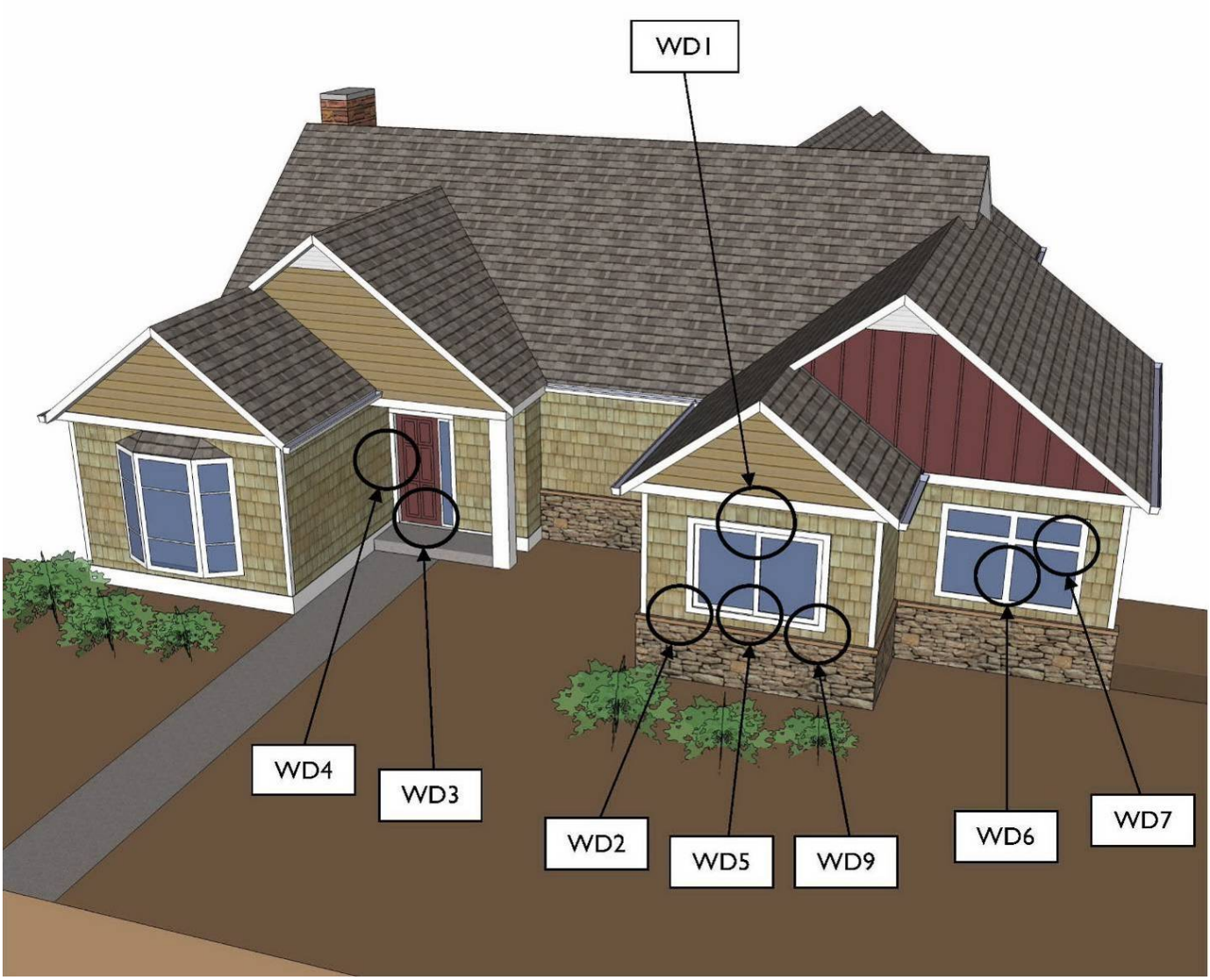

(W1) Sealant Condition

(W3) Back Sloped Flashings

(W4) Unprimed Wood

(W5) Poor Dryer Vent Details

(W10) Partition Wall at Building

(W14) Scuppers

(W15) Horizontal Architectural Elements

(W17) Interrupted Horizontal Flashings

(W17) Interrupted Horizontal Flashings

(W24) Siding Butted at Window Jambs

(W29) Horiz. Joints through Vert. Joints in Stucco

(W35) Clay Masonry (Brick) Growth

(W37) Grout Degradation

(W39) Lack of Weeps

(WD2) Lack of Sill Flashing

(WD4) Lack of Door Jamb Flashing

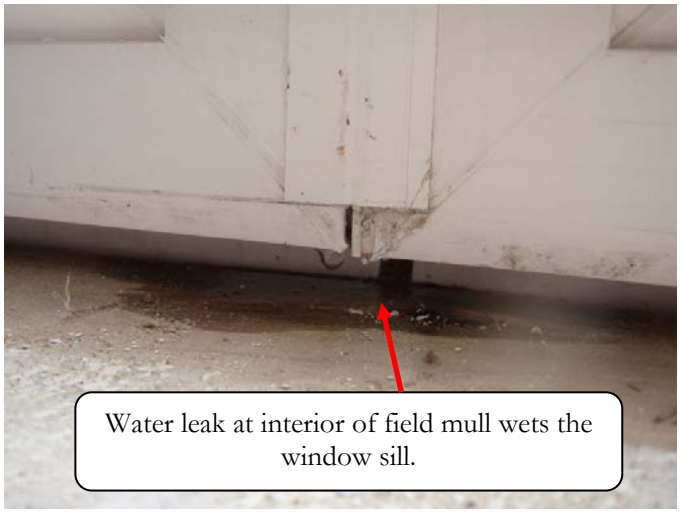

(WD6) Field Mulled Windows

(WD9) Mitered Corners

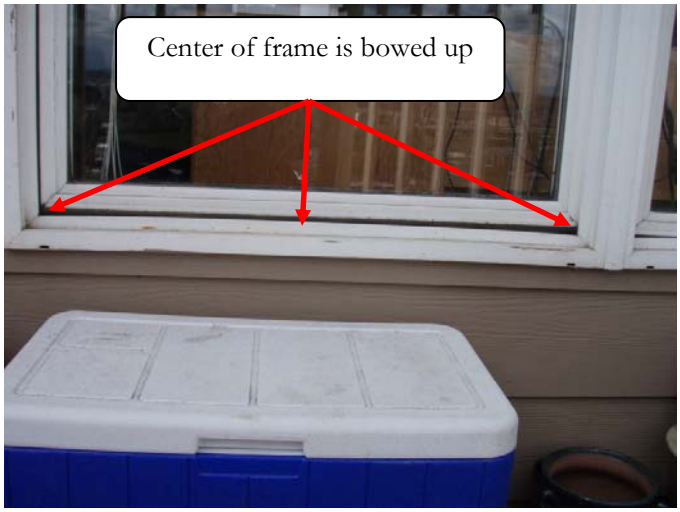

(WD10) Warped Vinyl, Broken Balances

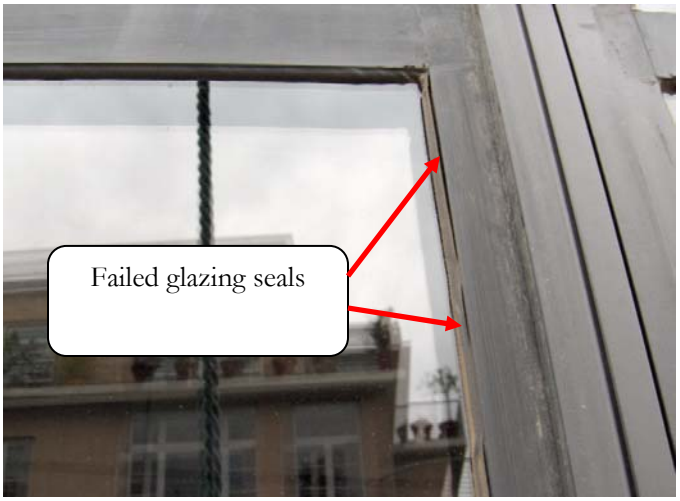

(WD13) Worn, Torn, Missing Gaskets or Seals

(WD15) Metal Clad Wood

(BD1) Deck to Wall Saddle Flashing

(BD3) Ledger Flashing

(BG1) Siding at Grade

(BG3) Buried Sill Plate at Foundation

Building Name –Unit Survey

The maintenance plan for the building recommends periodic review of the building enclosure (which includes roof, walls, windows, exterior doors, decks, etc.). To assist in the review, this questionnaire is being distributed to each owner. When completed, please return to:

_____ of _____ by _____

Unit No.: _____ **Owner's Name:** _____ **Phone No.:** _____

Insert Project Specific Notes Here

Please select the box (unless noted otherwise in a given question) corresponding with the appropriate location or fill in the answers as required.

					Bath			Bed					
	Living Rm.	Dining Rm.	Solarium	Kitchen	Main	1	2	Master	1	2	3	4	Other
1. What direction do the exterior walls of your Unit face?													
North ☐ East ☐ South ☐ West ☐													
2. Do you have any water leakage in any of the following areas?													
a) Walls	☐	☐	☐	☐	☐	☐	☐	☐	☐	☐	☐	☐	☐
b) Ceilings	☐	☐	☐	☐	☐	☐	☐	☐	☐	☐	☐	☐	☐
c) Window sills	☐	☐	☐	☐	☐	☐	☐	☐	☐	☐	☐	☐	☐
d) Floors	☐	☐	☐	☐	☐	☐	☐	☐	☐	☐	☐	☐	☐
3. Do the leaks identified in #2 appear only when it rains? Yes ☐ No ☐													
4. Are you having any problems with windows?													
a) Water leaks?	☐	☐	☐	☐	☐	☐	☐	☐	☐	☐	☐	☐	☐
b) Air leaks?	☐	☐	☐	☐	☐	☐	☐	☐	☐	☐	☐	☐	☐
c) Condensation, fogging or icing?	☐	☐	☐	☐	☐	☐	☐	☐	☐	☐	☐	☐	☐
d) Sealant squeeze-out?	☐	☐	☐	☐	☐	☐	☐	☐	☐	☐	☐	☐	☐
e) Broken glass?	☐	☐	☐	☐	☐	☐	☐	☐	☐	☐	☐	☐	☐
f) Operation or difficulty closing or locking?	☐	☐	☐	☐	☐	☐	☐	☐	☐	☐	☐	☐	☐
g) Misalignment?	☐	☐	☐	☐	☐	☐	☐	☐	☐	☐	☐	☐	☐
h) Frame finish?	☐	☐	☐	☐	☐	☐	☐	☐	☐	☐	☐	☐	☐
i) Wind noises, rattles?	☐	☐	☐	☐	☐	☐	☐	☐	☐	☐	☐	☐	☐
j) Unsealed gaps between window frame and wall or ceiling?	☐	☐	☐	☐	☐	☐	☐	☐	☐	☐	☐	☐	☐
k) Other	☐	☐	☐	☐	☐	☐	☐	☐	☐	☐	☐	☐	☐
5. Do the leaks identified in #4a appear only when it rains? Yes ☐ No ☐													
6. Are you having any problems with exterior doors?													
a) Water leaks?	☐	☐	☐	☐	☐	☐	☐	☐	☐	☐	☐	☐	☐
b) Air leaks?	☐	☐	☐	☐	☐	☐	☐	☐	☐	☐	☐	☐	☐
c) Condensation, fogging or icing (at doors with windows)?	☐	☐	☐	☐	☐	☐	☐	☐	☐	☐	☐	☐	☐
d) Sealant squeeze-out?	☐	☐	☐	☐	☐	☐	☐	☐	☐	☐	☐	☐	☐
e) Broken glass (at doors with windows)?	☐	☐	☐	☐	☐	☐	☐	☐	☐	☐	☐	☐	☐
f) Operation or difficulty closing or locking?	☐	☐	☐	☐	☐	☐	☐	☐	☐	☐	☐	☐	☐
g) Misalignment?	☐	☐	☐	☐	☐	☐	☐	☐	☐	☐	☐	☐	☐
h) Frame finish?	☐	☐	☐	☐	☐	☐	☐	☐	☐	☐	☐	☐	☐
i) Wind noises, rattles?	☐	☐	☐	☐	☐	☐	☐	☐	☐	☐	☐	☐	☐
j) Unsealed gaps between window frame and wall or ceiling?	☐	☐	☐	☐	☐	☐	☐	☐	☐	☐	☐	☐	☐
k) Other	☐	☐	☐	☐	☐	☐	☐	☐	☐	☐	☐	☐	☐

Please select the box (unless noted otherwise in a given question) corresponding with the appropriate location or fill in the answers as required.	Living Rm.	Dining Rm.	Solarium	Kitchen	Bath Main	Bath 1	Bath 2	Bed Master	Bed 1	Bed 2	Bed 3	Bed 4	Other
7. Do the leaks identified in #6a appear only when it rains? Yes ☐ No ☐													
8. Is any wall unusually cold in cold weather? If so, where?	☐	☐	☐	☐	☐	☐	☐	☐	☐	☐	☐	☐	☐
9. Does cold air penetrate into your unit? If so, where?	☐	☐	☐	☐	☐	☐	☐	☐	☐	☐	☐	☐	☐
10. Do you have black mildew? (walls, ceilings or other)	☐	☐	☐	☐	☐	☐	☐	☐	☐	☐	☐	☐	☐
11. Do you have any humidifiers? If yes, please indicate location.	☐	☐	☐	☐	☐	☐	☐	☐	☐	☐	☐	☐	☐
12. Do you notice any unusual odors in your unit (e.g. paint, smoke acrid smells)?	☐	☐	☐	☐	☐	☐	☐	☐	☐	☐	☐	☐	☐

Location:
Description:
Comments:

13. Are there ceiling or wall cracks in your unit?													

Width: Hairline = H Credit Card Thickness = C Wider = W inches
Comments:

14. Do you have any other comments?
Comments: