East Fork Irrigation District

System Improvement Plan

Prepared for: East Fork Irrigation District
Prepared by: Mark Wharry

June 2015 | KPFF Project #314222

DRAFT 3

kpff

KPFF'S COMMITMENT TO SUSTAINABILITY

As a member of the US Green Building Council, a sustaining member of Oregon Natural Step, and a member of the Sustainable Products Purchasers Coalition, KPFF is committed to the practice of sustainable design and the use of sustainable materials in our work.

When hardcopy reports are provided by KPFF, they are prepared using recycled and recyclable materials, reflecting KPFF's commitment to using sustainable practices and methods in all of our products.

Table of Contents

Section 1 - Introduction 6
Purpose of System Improvement Plan 6
Scope of Services and Organization of System Improvement Plan Report 6
Acknowledgments 7
Section 2 – Study Area 8
District Area & Land Use 8
District Surface Water Diversion Rights 9
General District Topography 9
Section 3 – General Narrative of Existing Irrigation System 10
East Fork Hood River Intake 10
Sediment Settling 11
Fish Screening & Bypass Returns 12
Main Canal Transmission System 12
Distribution Center (Two Main Laterals) 13
Dukes Valley Lateral Canal 13
Central Lateral Pipeline 14
Eastside Lateral Canal 15
Pressure Regulation & Air Venting 15
Overflows (Return Flows) to River 15
Section 4 – Irrigation System Water Demands 16
Tabulation of District Water Users 16
Irrigation Rates & Summary of Distribution Flows 16
EFID Irrigation System Overflows 19
Section 5 – Water Supply 21
Water Source 21
Reliability of Supply 21
Water Quality 22
Section 6 – Recommended Conveyance & Distribution Improvements 23
Dukes Valley Lateral Canal Piping 23

Eastside Lateral Canal Piping 24
Main Canal Piping 28
Christopher Ditch Piping 30
Highline Lateral Ditch Piping 30
Piping Sub-Laterals 30
Sand Trap Bypass Improvements 31
Sand Trap Sediment Settling Improvements 32
Proposed District System Improvements Preliminary Cost Estimates 33
System Improvements Implementation Prioritization 34
Section 7 – Telemetry Monitoring and Control Improvements 35
Initial Telemetry Sites & Phasing 35
Instrumentation Inputs 38
Actuation / Control Outputs 40
Telemetry System Preliminary Programming Objectives 40
Telephone Service Availability at Initial Telemetry Sites 41
Telemetry Hardware Platform Options 42
Software Analysis 43
Section 8 – Water Storage Improvements 45
Section 9 – Hydroelectric Analysis 46
Background 46
Central Lateral Pipeline Neal Creek Site 46
Dukes Valley Pipeline Odell Creek Site 47
Main Canal Site 49
Potential Hydroelectric Feasibility Issues 50
Permitting and Environmental Analyses 50
Section 10 – Water Conservation 52
Canal Infiltration and Evaporation 52
Evaporation 53
Significant Overflows 54
Minor Overflows 58

Water Conservation Summary 58
References 59

Tables and Figures

Figure 2-1: East Fork Irrigation District Area 8
Figure 2-2: EFID Water Rights 9
Figure 2-3: EFID System Elevations 9
Figure 3-1: New River Intake Headworks (Constructed 2013) 10
Figure 3-2: Sluice canal 11
Figure 3-3: A concrete settling bay 11
Figure 3-4: Typical Particle Sizes in Glacial Runoff (Haritashya et al., 2010) 12
Figure 3-5: Coanda Fish Screens 12
Figure 3-6: Bypass Return 12
Figure 3-7: Main Canal silt settling basin 13
Figure 3-8: Main Canal at Gage Station 13
Figure 3-9: Distribution Center with Traveling Screen 13
Figure 3-10: Dukes Valley Cameron Hill Water Box 14
Figure 3-11: Dukes Valley 24-inch Pipe Daylight 14
Figure 3-12: Central Lateral chipping line box 14
Figure 3-13: Central Lateral water box 3 14
Figure 3-14: Eastside Canal @ Swyers Drive 15
Figure 3-15: Water Box 4 15
Figure 4-1: Historical EFID Irrigation Flow Rates 17
Figure 4-2: OWRD Gage Station 14114000 EFID Average Daily Irrigation Flow Graph 17
Figure 4-3: Main Canal Diversions 18
Figure 4-4: Central Lateral Diversions 18
Figure 4-5: Dukes Valley Lateral Diversions 19
Figure 4-6: Eastside Lateral Canal Diversions 19
Figure 4-7: Inventory of District Overflows 20
Figure 6-1: Concrete Water Box Stilling Reservoir Diagram 23
Figure 6-2: Dukes Valley Pipeline Improvements Schematic 24
Figure 6-3: Eastside Lateral Pipeline Improvements – Option 1 25
Figure 6-4: Eastside Lateral Pipeline Improvements – Option 2 26
Figure 6-5: Eastside Lateral Pipeline Improvements – Option 3 28
Figure 6-6: Main Canal Pipeline Improvements 29
Figure 6-7: Sub-Lateral Piping 31
Figure 6-8: New Proposed Sediment Settling Basin 33
Figure 6-9: Existing Settling Basins 33

Figure 6-10: Proposed New Settling Basins (After Canal Piping) 33
Figure 6-11: Proposed New Settling Basins (After Canal Piping) 34
Figure 6-12: Project Prioritization Criteria 34
Figure 7-1: Basic Telemetry Sites 35
Figure 7-2: Headworks Site 36
Figure 7-3: Sand Trap Settling Bays 36
Figure 7-4: Sand Trap Bypass Weir 36
Figure 7-5: Christopher Water Box Location 36
Figure 7-6: Central Distribution Site 36
Figure 7-7: Cameron Hill Water Box 36
Figure 7-8: Dukes Valley Water Box 37
Figure 7-9: Central Lateral Water Box 1 37
Figure 7-10: Central Lateral Water Box 4 37
Figure 7-11: Main Canal USGS Gage Station 37
Figure 7-12: Preliminary Phase 1 and Phase 2 Instrumentation Inputs 38
Figure 7-13: Preliminary Phase 3 (Overflows) Instrumentation Inputs 39
Figure 7-14: Preliminary Phase 4 (Metering) Instrumentation Inputs 39
Figure 7-15: Preliminary Actuation Control Outputs 40
Figure 7-16: Century Link Telephone Service 42
Figure 7-17: Telemetry System Cost Estimates 44
Figure 9-1: Central Lateral Pipeline Flow 46
Figure 9-2: Central Lateral Pipeline Hydroelectric Parameters 47
Figure 9-3: Dukes Valley Lateral Pipeline Flow 48
Figure 9-4: Dukes Valley Lateral Pipeline Hydroelectric Parameters 48
Figure 9-5: Main Canal Pipeline Hydro Flow 49
Figure 9-6: Main Canal Pipeline Hydroelectric Parameters 49
Figure 10-1: Canal Infiltration Area Geometry 52
Figure 10-2: Canal Infiltration 53
Figure 10-3: Canal Evaporation Area Geometry 53
Figure 10-4: Bureau of Reclamation Evaporation Rates for Hood River 53
Figure 10-5: Canal Evaporation 54
Figure 10-6: MHID Overflow 54
Figure 10-7: Neal Overflow External Weir 55
Figure 10-8: Kennedy Overflow External Weir 55
Figure 10-9: Wilson Box Overflow 55
Figure 10-10: Dethman Ridge (DeGroot) Overflow Weir 55
Figure 10-11: Marsh-Chamberlin Overflow Weir 56
Figure 10-12: Chamberlin Overflow 56
Figure 10-13: Highline Overflow 56
Figure 10-14: Loop Line (Lage) Overflow 56

Figure 10-15: Thomsen Line Overflow 57
Figure 10-16: Whiskey Creek Overflow 57
Figure 10-17: Significant Overflow Summary 58
Figure 10-18: Water Conservation SummaryOverflow Summary 58

Appendices

Appendix 1

District Water Rights

Appendix 2

Tabulation of Water Users

Appendix 3

District Transmission Canal Pipeline Maps

Appendix 4

District Overflow Maps

Appendix 5

Preliminary Drawings

Appendix 6

Preliminary Cost Estimates

Appendix 7

Telemetry System Vendor Data & Cost Estimates

Appendix 8

Century Link Proximity to Proposed Telemetry Sites

Appendix 9 (Not included in Draft 3 Submittal)

Infiltration & Overflow Field Measurement (FCI)

Appendix 10 (Not included in Draft 3 Submittal)

EFID Potential Storage Improvements

Hood River Basin Surface Water Storage Feasibility Assessment

Appendix 11

Vendor Data Sheets

Section 1 - Introduction

Purpose of System Improvement Plan

The East Fork Irrigation District, located on the east side of Hood River Valley beginning just south of the community of Mount Hood north to the Columbia River and east of Hood River, was originally developed around 1900. The conveyance systems consisted primarily of open earth canals with simple water box turn-outs to irrigate agricultural property. Since that time, the District has made various improvements to pipe certain sections of the canal system, add fish screening and silt settling facilities, improve the river intake structure, provide fish passage and install pressure regulator and air venting systems.

The majority of the system, however, is still open channel earthen canals and some undetermined amount of diverted water is currently lost to infiltration and evaporation. In addition, the overall District has nearly 1,000 feet of topographic relief throughout the irrigated area and transmission of water in open channels required the use of multiple return flow 'spills' throughout the system to maintain steady water supply to the District patrons. The District has a desire to investigate opportunities for water conservation and to develop a prioritized list of improvements to update the District infrastructure to take advantage of new technology. The overall goal of the system improvement plan is as follows:

A. Ensure dependable irrigation water supply to existing and future District customers.
B. Develop preliminary estimates for piping main open canal sections of the District to realize water conservation and improve flow control.
C. Evaluate concepts for the installation of automated telemetry flow monitoring and control at key points throughout the District to maximize water use efficiency.
D. Develop a priority system for future construction of capital improvements based on parameters such as water conservation, stream flow impacts and operating costs.

Scope of Services and Organization of System Improvement Plan Report

East Fork Irrigation District (EFID) retained KPFF Consulting Engineers (KPFF) to prepare a District System Improvement Plan in November 2014. The scope of work included the following major elements:

A. Review of existing conditions including field visits and documentation of existing canal systems. To the extent available, reference documentation and drawings were reviewed as well as records of existing water rights. Various treatment facilities were also observed including stream diversion and fish passage, silt settling and fish screening, and canal settling basins.
B. From the observation field work, an overview of the existing system was developed. This included a schematic of the EFID distribution system, tabulation of water flows, determination of rough topography of main canals and a narrative of the general EFID system and treatment facilities.
C. The third task included an evaluation of a proposed telemetry monitoring and control system. A list of basic monitoring sites was developed along with a control schematic for key points throughout the District. Vendor options were examined and preliminary implementation cost estimates were developed.
D. A list of potential improvement projects was developed and preliminary planning level cost estimates were included. Proposed capital improvements included main canal piping projects, potential additional sediment facilities, bypass upgrades, and storage.

The documentation of the existing EFID system and evaluation of potential future improvements was documented in the published System Improvement Plan report. Various elements were addressed in report sections as follows:

A. Introduction narrative and brief description of study area (Sections 1-2).
B. Description of existing irrigation system and current water use (Sections 3-4).
C. Recommended District capital improvements (Section 5).
D. Review of telemetry monitoring and control options (Section 6).
E. Feasibility of hydroelectric facilities (from previous report) at several District sites (Section 7).
F. Estimates of water conservation opportunities (Section 8).

Acknowledgments

This report would not have been possible without the valuable assistance of the EFID staff. In particular, John Buckley, District Manager, and Brian Nakamura, Board Chair greatly assisted with providing timely District operational information and technical review and direction.

The EFID Water Rights Specialist, Cindy Sheppard, provided extensive District water flow information, distribution spreadsheets, acreage breakdowns and diversion locations that greatly assisted in the overall documentation of the EFID District system.

The development of the Master Plan report was funded by the Confederated Tribes of Warm Springs (CTWS) and by grant funding from the Oregon Water Resources Department Water Conservation, Storage and Reuse Program. Joe McCanna, Fisheries Biologist with CTWS and Cindy Thieman, Coordinator with the Hood River Watershed Group greatly assisted with the development of the System Improvement Plan Report scope and direction.

Section 2 – Study Area

District Area & Land Use

The East Fork Irrigation District is located along the east side of the Hood River Valley north of Mount Hood. The District was created to provide irrigation water to approximately 9,600 acres of commercial agricultural growers. Figure 2-1 below shows the general area for this system improvement plan. Although there continues be residential land development through the Hood River Valley, the predominant land use today remains agricultural. Most of the commercial agriculture within the District consists of fruit growing operations including winter pears, apples, wine grapes, cherries and berries. Additional agricultural land use activities include raising livestock and production of feed crops such as hay and alfalfa.

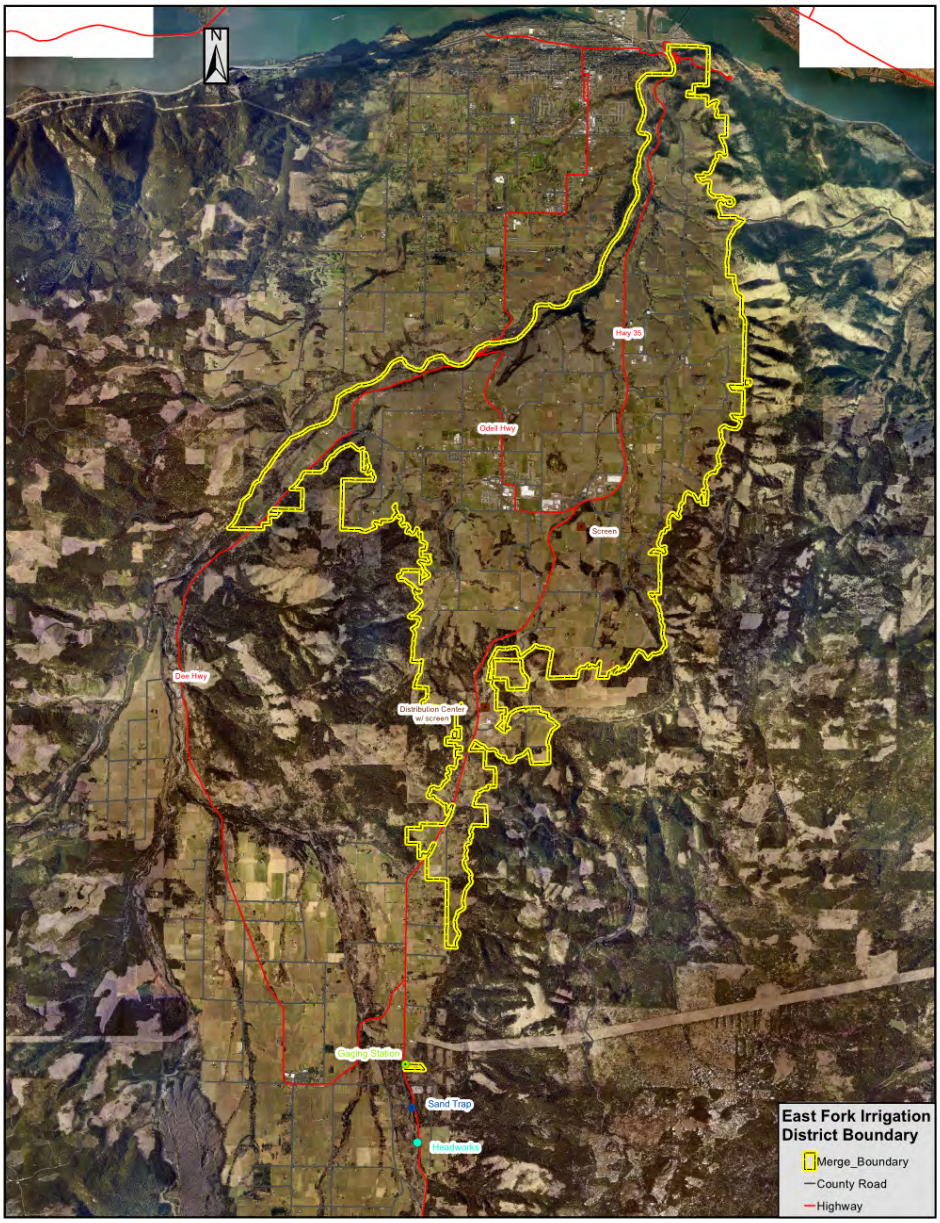

Figure 2-1: East Fork Irrigation District Area

District Surface Water Diversion Rights

As the District has grown, there have been subsequent small water rights and permits issued over the last 50 years as shown in Figure 2-2 below. The District's certificates authorize a maximum diversion of 120 cfs.

Water Right Certificate/Permit	Number	Diversion Flow	Priority Date
Certificate	81340	106.550 CFS	November 25, 1895
(Inchoate Rights)		0.250 CFS	
Certificate	80929	5.990 CFS	March 13, 1964
Certificate	80928	1.100 CFS	August 13, 1965
Certificate	80927	0.710 CFS	October 26, 1966
Certificate	80926	0.310 CFS	June 14, 1967
Certificate	84803	5.060 CFS	August 8, 1977
Certificate	84802	0.125 CFS	February 3, 1982
		120.095 CFS	

Figure 2-2: EFID Water Rights

General District Topography

As mentioned previously, there is significant elevation drop from the south)end of the District down to the lower end of the open canals. Figure 2-3 below illustrates the various elevations of open canal points.

Location	Elevation	Vertical Drop from Headworks
Diversion Headworks	1721.0	
Sand Trap & Fish Screens	1675.0	46'
Main Canal Christopher/Bowcut Water Box	1624.0	97'
Main Canal Traveling Screen Box	1575.0	146'
Central Lateral Water Box 1	1545.0	176'
Central Lateral Water Box 2	1244.0	477'
Central Lateral Water Box 3	1080.0	641'
Eastside Canal Begin (Water Box 4)	950.0	771'
Eastside Canal Whiskey Creek Water Box	925.0	796'
Dukes Valley Cameron Hill Water Box	1574.0	147'
Dukes Valley Pipe Daylight (Odell Creek)	1100.0	621'
Dukes Valley Highline Lateral Water Box	1070.0	651'

Figure 2-3: EFID System Elevations

Section 3 – General Narrative of Existing Irrigation System

East Fork Hood River Intake

The irrigation water for the District is supplied by a single surface water diversion off the East Fork of the Hood River at approximately River Mile 7. For many decades, the diversion structure was a simple bank wingwall structure with a single timber headgate. During the irrigation season, water was impounded within the river by building up a rock "push-up" dam each season and creating a forebay at the diversion headgate. The original aging headgate facility was constructed in the early 1900s and had a number of issues associated with it.

A. The aging headgate had reached the end of its useful life and was in jeopardy of failing during high flows.

B. Operation of the large timber headgate was problematic for protecting fish early in the season when the District was diverting a small amount of flow.

C. The configuration of the headgate structure to the river exacerbated entrainment of silt and sediment into the diverted water.

D. The construction of the push-up dam required equipment to work in the river each year and constituted a barrier to fish passage during low water years.

In 2013, the District re-constructed the entire diversion structure to address these issues. See Figure 3-1 below.

Figure 3-1: New River Intake Headworks (Constructed 2013)

The new headworks facility incorporates the following features:

A. Construction of a new operable diversion facility across the river. Obermeyer inflatable bladder control gates were installed on a concrete apron spanning the river that can be raised in the summer during the irrigation season to create a forebay. This eliminates the need for the District to put earth moving equipment in the river. During the winter, the control gates can be lowered allowing the river to flow normally and providing capacity to pass large flood flows.

B. To provide fish passage during times when the control gates are raised, a vertical slot fishway was included with the project. The fish ladder was designed to NMFH juvenile fish passage criteria and allows silt and sediment to pass through the system unimpeded.

C. The original headgate structure was completely replaced with a new set of headgates to divert water into the EFID system. Four smaller stainless steel slide gates (48-inch square) were provided in lieu of the single large 10 foot wide timber slide gates. These gates were configured at 90 degrees to the river flow and were raised up off the bottom of the concrete apron to minimize silt entrainment into the District. The gates are designed for future installation of motor actuators to allow automation and telemetry control.

Sediment Settling

The diverted water from the East Fork of the Hood River is glacial melt runoff from Mount Hood and is subject to extensive entrainment of glacial till (sand and silt). Dealing with sand and silt has historically been a major issue facing the District. At times during high-sediment periods, the District must manually flush or remove sediment from these primary settling locations and in years past, the District has had to deal with thousands of yards of stockpiled sand and silt.

Once the water enters the EFID irrigation distribution systems, there are numerous locations where the District attempts to remove sediment by gravity settlement. The primary sand and silt settling location is the main 'sand trap' facility located approximately half a mile downstream from the river intake. At this location, there are actually two facilities that capture the heavier sand particles: a wide section of the sluice canal and a subsequent concrete structure with five partitioned settling bays. See Figures 3-2 and 3-3 below.

Figure 3-2: Sluice canal

Figure 3-3: A concrete settling bay

There is no reliable data on the exact concentration of glacial till constituents in the water. Early in the irrigation season, the water can be relatively clear. Late in the summer, however, particularly during low-water years, the water can be heavily laden with sand and silt. Based on data presented in the Hood River Basin Conservation Assessment, average monthly turbidity measurements at the EFID diversion (measured as part of the Hood River production program Review in 2003) ranged from 19.2 NTU (nephelometric turbidity units) in March to a high of 133.8 NTU in July.

Courser particles in the East Fork of Hood River glacial water, however, such as fine and medium sand are too large to be picked up as part of the NTU measurements. Typical sediment distribution in glacial runoff is often represented by a gradient of particle sizes from clay to course sand as shown in the table below.

Particle Type	Particle Size (mm)	Percent by Weight
Clay	<0.002	7%
Fine Silt	0.002 – 0.006	12%
Medium Silt	0.006 – 0.02	27%
Course Silt	0.02 – 0.06	30%
Fine Sand	0.06 – 0.2	17%
Medium Sand	0.2 – 0.6	7%

Figure 3-4: Typical Particle Sizes in Glacial Runoff (Haritashya et al., 2010)

The existing sand settling facility is sized to settle the larger sand particles. The bays are 12 feet wide, have a varying depth from 4 to 10 feet and provide approximately 6,800 cubic feet of settling water volume. At peak flow, the District can run approximately 32 cfs through each bay providing a residence time of a little nearly four minutes. This residence time is adequate for settling medium sand and a large percentage of the fine sand. The silt and clay particles, however, require much longer residence times for removal and currently pass through the system into the District canals.

Fish Screening & Bypass Returns

At the end of each of the sediment settling bays, a 12-foot wide Coanda screen provides fish screening for the EFID diverted water. These screens were originally constructed in 1996 as part of the overall sand trap project and are installed in a reverse-inclined configuration. Water passes over the top of the screen and diverted flow falls through the screens and continues on to the EFID system (see Figure 2-4 below).

Figure 3-5: Coanda Fish Screens

Figure 3-6: Bypass Return

Any debris in the water caught by the screens is carried off the toe of the screen face by the high velocity flow. This is combined with the sediment flushing water from the sand settling bays and is bypassed back to the river. Each screen is approximately 12 feet wide and 4 feet high. At full flow, EFID diverts 10-20 cfs of bypass flow to carry sediment and debris back to river (Figure 3-5 above).

Main Canal Transmission System

Once the diverted water passes through the sand trap/fish screen facility, it enters the open canal irrigation distribution system within the district. The first conveyance canal, Main Canal, conveys the full diverted EFID flow approximately 6 miles from the sand trap facility along the east side of the upper Hood River

Valley to a 'Distribution Center' location near the Mt. Hood Forest Products wood products mill site. At this point, the conveyance system splits into two sub-laterals: Central Lateral Pipeline and Dukes. Figures 3-6 and 3-7 below illustrate the Main Canal at the gage station and settling pit.

Valley Canal. Respective flows for these sub-laterals is outlined in Section 4.

Figure 3-7: Main Canal silt settling basin

Figure 3-8: Main Canal at Gage Station

Distribution Center (Two Main Laterals)

At the Distribution Center, the water is screened again through a traveling screen facility before diversion into the sub-laterals. The Central Lateral open canal system was recently converted from open canal to piped system over a four year period (2006-2010). This central lateral also conveys water for a third sub-lateral system, the Eastside Canal. These traveling screens were installed in 2007 to remove debris picked up by the water during its travel in the open Main Canal before entering the Central Lateral pipeline. There is currently also an overflow at this point to balance flow irregularities and spill excess water to the Neal Creek drainage.

Figure 3-9: Distribution Center with Traveling Screen

Dukes Valley Lateral Canal

The Dukes Valley lateral canal conveys approximately 24 cfs from the Main Canal Distribution Center over to the west side of the District. The canal runs under Highway 35 and enters a 4,000-foot long 24-inch pipeline through the Cameron Hill water box shown in Figure 3-9 below. This pipeline conveys the water to a 400-foot lower elevation and discharges to the Dukes Valley canal at an open pipe daylight pit which forms the beginning of the canal as shown in Figure 3-10.

Figure 3-10: Dukes Valley Cameron Hill Water Box

Figure 3-11: Dukes Valley 24-inch Pipe Daylight

Once the pipeline daylights into Dukes Valley, the canal proceeds along the west side of the valley approximately 3.78 miles. The canal terminates at the final water box diversion for the Chamberlin Pressure Line and the small Highline Lateral canal west of the community of Odell near Gilhouley Road. During its course, the lateral has turnouts for various individual irrigators as well as major diversions that serve multiple patrons such as the Cameron Hill, Sheirbon Hill, Cherry Hill and Chamberlin pipelines. These diversions are tabulated on the EFID system schematic and are described in more detail in Section 5.

Central Lateral Pipeline

The central lateral also extends from the Distribution Center along the upper southern edge of Willow Flat for approximately 2.8 miles. This open canal was converted to a low pressure pipeline system in 2010 and, in addition to the 46 cfs it conveys for the Central Lateral irrigation demand, the system also conveys an additional 41 cfs for the third major District lateral; the Eastside canal.

There are private irrigation turnouts throughout the distance of this line as well as major diversion pipelines such as Winklebleck, Gilkerson, Bietler, Chipping Line, Oana and Allison lines. The details regarding location and flow information for these major diversions are discussed in Section 4 of this report. Exhibit 3-11 below shows a typical valve turnout box for the Chipping Line diversion.

Figure 3-12: Central Lateral chipping line box

Figure 3-13: Central Lateral water box 3

At the terminus of the Central Lateral low pressure pipeline, a 30-inch steel high pressure pipeline conveys this Eastside lateral flow down approximately 600 feet to the beginning of the Eastside canal. There is a

series of water boxes along this 600 foot drop to dissipate the energy and prevent pressure build-up in the pipeline. Figure 3-12 above illustrates one of these water boxes (Water Box #3) along the pipe route.

Eastside Lateral Canal

The Eastside lateral canal extends from Water Box #4 (terminus of the high pressure 30" steel conveyance pipeline from the Central Lateral) along the east side of lower Hood River valley for a distance of 5.9 miles. This is an open canal system with private irrigation turnouts throughout the distance of this line as well as major diversion pipelines such as Rasmussen, Mathieson, Crag Rat, Loop Line, Dethman Swyers, Thomsen and Paasch lines. The details regarding location and flow information for these major diversions are discussed in Section 4 of this report.

Figure 3-14: Eastside Canal @ Swyers Drive

Figure 3-15: Water Box 4

Pressure Regulation & Air Venting

As mentioned in the earlier Section 2 of this report, there is significant topographic relief and elevation drop within the distribution system of the District. The main river intake elevation is at 1721.0 feet and some of the lower irrigation properties in the system near Hood River are at approximate elevation 300.0 feet. The total elevation drop throughout the District is over 1,400 feet.

This topographic relief has contributed to numerous locations where pressure relief and air relief facilities are required. In a number of isolated locations, the District has installed air relief valves at high points in the pipelines to provide proper air venting. In addition, Cla-Val pressure regulating valves (PRV's) have been installed to reduce high pipe line pressures.

Overflows (Return Flows) to River

Because the District is predominantly an open canal system, excess flow overflows are required. Individual growers can vary the water flow including turning water on and off out of the canal system throughout the day. The District currently monitors water use as closely as possible, but it cannot exactly match flow demand on an instantaneous basis. At each open canal flow, or at pipeline locations where the irrigation water enters a gravity distribution box, overflow spill lines are required to prevent excess unused flow from overtopping the system.

There are approximately 60 locations throughout the District. These overflow locations are plumbed to convey excess water back to the river or associated natural drainage. These overflow locations are tabulated in Section 4.

Section 4 – Irrigation System Water Demands

Tabulation of District Water Users

The East Fork Irrigation District comprises approximately 1,100 patrons irrigating a total of 9,529 acres. The predominant land use is agricultural fruit crops including winter pears, apples, cherries, wine grapes and berries. The individual agricultural operations vary greatly in size from less than one acre to several hundred acres.

EFID maintains a database of the District patrons in ARC GIS. Fundamental information for each water user has been cataloged into the database including the following elements:

A. Lateral Diversion
B. Diversion (or Turn Out) Pipe Size
C. Valve Number
D. Customer Name
E. Property Address
F. Irrigation Acres
G. Legal Parcel Number
H. Irrigation Flow Delivery Rate (based on 4.49 gpm/acre delivery rate)

The overall tabulation of the water users was provided by EFID and used as the base inventory to establish acreages and flows for each main canal lateral and major sub-laterals. A copy of the water users tabulation is included in Appendix 2.

Irrigation Rates & Summary of Distribution Flows

The original water rights for the District are based on a *"Diversion Rate"* of 5.62 gpm/acre. For a total irrigated District acreage of 9,529 acres, this Total Diversion Rate of 5.62 gpm/acre equals 119.3 cfs (approximately 120 cfs) diverted from the East Fork of the Hood River.

Note, however, that the District is obligated to deliver a "Delivery Rate" of 4.49 gpm/acre. Using the same total acreage of 9,529 irrigated acres, the District is obligated to deliver 95.33 cfs to patrons. The remaining excess flow is programmed for normal losses inherent in the distribution system including conveyance, infiltration, evaporation, and overflows.

The District has very little metering data on actual historical water use within the District. Oregon Water Resources Department currently operates a gaging station (USGS Gage No.: 14114000) within the upstream end of the main canal just downstream of the sediment settling basin and the fish screens. Although the data is not continuous, the gage has been in place since 1925. The exhibits below tabulate average accepted flow into the district over a 25 year period from 1965 to 1990. There is a gap in the historical data from 1991 to 2009. Then data is available for two recent years 2010 and 2011. For comparison purposes, this data is also shown in graph below.

In addition to the current water users, there is a waiting list of water rights applicants in the District. This waiting list appears in Appendix 1 and represents approximately 260 acres of additional water rights applications. At a diversion rate of 5.62 gpm/acre, these applicants represent 3.25 cfs or less than 3% of the overall District irrigation flow.

EFID TYPICAL IRRIGATION RATES				
Irrigation Season	Average Daily Flow 1965-1990	Peak Flow 1965-1990	Average Daily Flow 2010-2011	Peak Flow 2010-2011
March	30.0	54.0	22.9	28.0
April	39.0	84.0	28.5	39.0
May	69.5	130.0	40.6	48.0
June	111.1	143.0	65.2	109.0
July	125.7	148.0	108.9	116.0
August	122.1	141.0	111.8	117.0
September	85.4	142.0	78.6	108.0
October	52.7	98.0	19.5	29.0

Figure 4-1: Historical EFID Irrigation Flow Rates

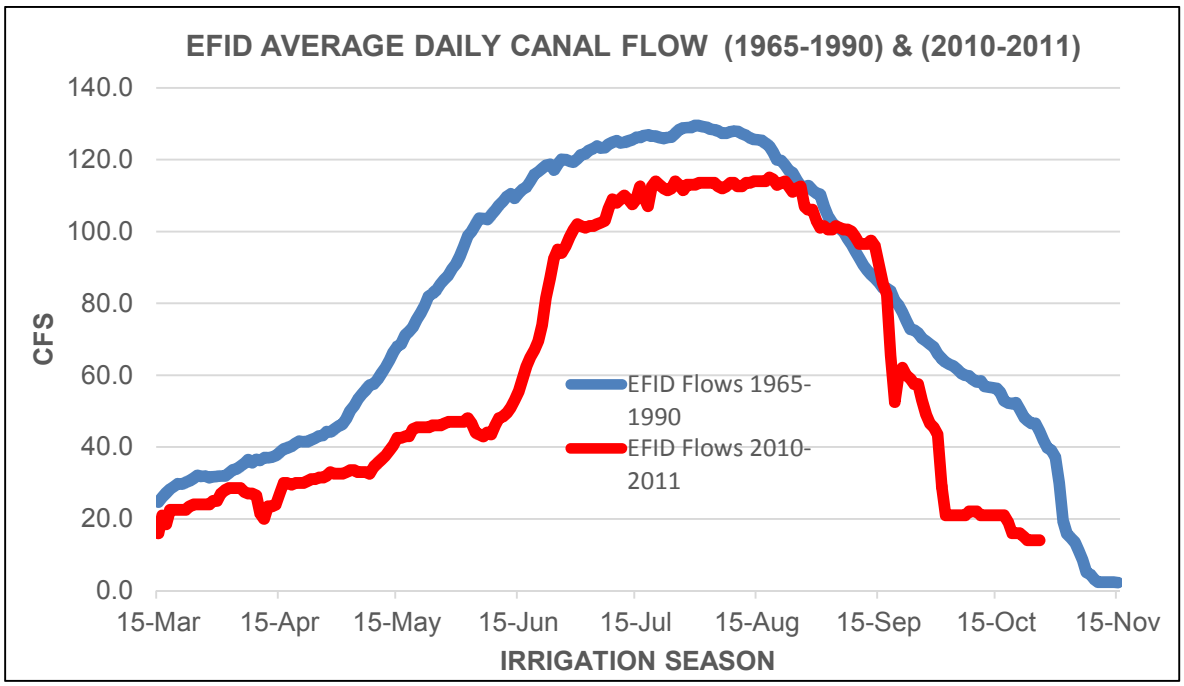

Figure 4-2: OWRD Gage Station 14114000 EFID Average Daily Irrigation Flow Graph

The District distribution configuration is separated into four basic main laterals as follows:

A. Main Canal (MC): Open canal section from the sand trap to the traveling screen box.

B. Central Lateral (CL): Pipeline section from the traveling screen box to the beginning of the Eastside Canal.

C. Duke Valley Lateral (DV): Open canal section (with one pipe line portion) from the traveling screen box to the end of the Dukes Valley canal at the Highline lateral take off.

D. Eastside Lateral (ES): Open canal section from end of Central Lateral to the end of the Eastside canal at the Whiskey Creek lateral take off.

Flows for these main canals and the associated major sub-laterals are tabulated in the table below. Corresponding acreages and peak flows for each sub-lateral are also included. The flows are based on a fundamental programmed irrigation rate determined by the original EFID water right of 5.62 gpm per acre.

MAIN CANAL (MC)					
Location	Northing	Easting	Elevation	Acres (AC)	Flow (CFS)
Headworks	45.5093	121.5645	1721.0	n/a	n/a
Sand Trap	45.5154	121.5660	1674.75	n/a	n/a
Main Canal Diversions	n/a	n/a	n/a	407.30	5.10
Mt Hood ID (West)	45.5235	121.5682	1654.0	n/a	
Mt Hood ID (East)	45.5235	121.5678	1654.0	n/a	
Fisher Line	45.5644	121.5518	1641.0	27.55	0.34
Bowcut Water Box	45.5797	121.5526	1624.0	71.50	0.90
Christopher Water Box	45.5797	121.5526	1624.0	156.70	1.96
Traveling Screen Water Box	45.5885	121.5482	1575.0	n/a	n/a
MC Subtotals				**663.05**	**8.30**

Figure 4-3: Main Canal Diversions

CENTRAL LATERAL (CL)					
Location	Northing	Easting	Elevation	Acres (AC)	Flow (CFS)
Traveling Screen Water Box	45.5885	121.5482	1575.0	n/a	n/a
Central Lateral Diversions	n/a	n/a	n/a	403.45	5.05
Winklebleck Line	45.5946	121.5502	1573.0	92.60	1.06
Gilkerson Line	45.5963	121.5473	1573.0	70.50	0.88
Bietler Line	45.5970	121.5471	1573.0	57.00	0.71
Peters Moe Stewart Wang Line	45.5995	121.5421	1571.0	131.75	1.65
Chipping Line	45.5995	121.5412	1570.0	629.10	7.88
Oanna Diversion	45.5981	121.5298	1560.0	2013.35	25.21
Allison Line	45.5967	121.5218	1550.0	155.20	1.94
Blaine Sheppard Auxiliary Line	45.5973	121.5159	1545.0	105.50	1.32
Water Box #1 – 30” Valve	45.5973	121.5159	1545.0	n/a	n/a
Water Box #2 – Sherrard Line	45.6006	121.5137	1244.0	n/a	n/a
Water Box #3 – Eastside Line	45.6061	121.5076	1080.0	38.70	0.48
Water Box #4	45.6123	121.5073	950.0	n/a	n/a
CL Subtotals				**3697.15**	**46.26**

Figure 4-4: Central Lateral Diversions

DUKES VALLEY CANAL (DV)					
Location	Northing	Easting	Elevation	Acres (AC)	Flow (CFS)
Traveling Screen Water Box	45.5885	121.5482	1575.0	n/a	n/a
Dukes Valley Canal Diversions	n/a	n/a	n/a	307.75	3.85
Cameron Hill Water Box	45.5910	121.5529	1574.0	100.80	1.26
Dukes Valley Pipe Daylight	45.5969	121.5652	1100.0	n/a	n/a
Sheirbon Hill Diversion Line	45.6255	121.5720	1075.0	106.95	1.34
Marsh Chamberlin Diversion	45.6300	121.5748	1071.0	431.05	5.40
Chamberlin Pressure Line	45.6300	121.5748	1071.0	509.05	6.37
Highline Ditch Water Box	45.6299	121.5758	1070.0	449.50	5.63
DV Subtotals				**1905.10**	**23.85**

Figure 4-5: Dukes Valley Lateral Diversions

EASTSIDE CANAL (ES)					
Location	Northing	Easting	Elevation	Acres (AC)	Flow (CFS)
Water Box #4	45.6123	121.5073	950.0	n/a	n/a
Eastside Canal Diversions	n/a	n/a	n/a	991.90	12.42
Rasmussen Line	45.6316	121.4910	943.0	315.15	3.95
Mathieson Line	45.6450	121.4864	935.0	72.20	0.90
Crag Rat Line	45.6490	121.4887	933.0	127.30	1.59
Loop Line	45.6558	121.4876	929.0	791.20	9.91
Paasch Line	45.6676	121.4868	925.0	170.55	2.14
Thomsen Line	45.6658	121.4875	925.0	151.10	1.89
Dethman Swyers Line	45.6641	121.4863	926.0	145.05	1.82
Water Box Whiskey Creek Line	45.6740	121.4859	925.0	499.33	6.25
ES Subtotals				**3263.78**	**40.87**
Totals				**9529.08**	**119.28**

Figure 4-6: Eastside Lateral Canal Diversions

EFID Irrigation System Overflows

The District operates a series of overflow spills located at the various terminus points of the main laterals and along landowner diversions. As more and more of the open canals and ditches are piped, these various overflows can be eliminated. An inventory tabulation of the overflows appears in Figure 4-7 below. Aerial maps of the overflow locations appear in the appendix.

During the field work for the System Improvements Plan, the majority of the overflows were investigated. Estimates of flows were developed based on measurements of overflow weir boxes. A tabulation of overflow quantities is presented in Section 10 under Water Conservation.

EFID OVERFLOWS		
No.	Location/Name	Lateral
1	MHID Screened Box	MC
2	MHID Water Box	MC
3	Christopher Ditch	MC
4	Mooney	MC
5	Neal Creek Lateral	MC
6	Winklebleck Line	CL
7	Gilkerson Line	CL
8	Beitler Line	CL
9	Stewart Line	CL
10	Douglas Butte Box	CL
11	Chipping Line - Evans	CL
12	Kennedy Box	CL
13	Wilson Box	CL
14	Alex Lo Line	CL
15	Yasui Line	CL
16	Nunamaker Line	CL
17	Neufeldt Line	CL
18	Dethman Ridge Line - Goe	CL
19	Dethman Ridge Line - DeGroot	CL
20	Dethman Ridge Line - Webster	CL
21	Dethman Ridge Line - Gilkerson	CL
22	Allison Line	CL
23	Cameron Hill	DV
24	Cameron Hill	DV
25	Cherry Hill Line	DV
26	Sheirbon Hill Line	DV
27	Sweet Line	DV
28	Sweet Line	DV
29	Marsh Chamberlin Line	DV
30	Wy'east School Line	DV

EFID OVERFLOWS		
No.	Location/Name	Lateral
31	Wy'east School Line - Castaneda	DV
32	Wy'east School Line	DV
33	Summit Road Line	DV
34	Chamberlin Line	DV
35	Ackerman Hill Line - Moe	DV
36	Ackerman Hill Line - Benedict	DV
37	Ackerman Hill Line - Sohler	DV
38	Shute Road Line	DV
39	Rock Acres Line	DV
40	Highline Canal	DV
41	Highline Ditch - Kohllepel	DV
42	Highline Ditch	DV
43	Rasmussen Line - Evans	ES
44	Crag Rat Line	ES
45	Crag Rat Line - Byers	ES
46	Loopline - Lage	ES
47	Loopline	ES
48	Eastside Canal - Lage	ES
49	Dethman Swyers Line	ES
50	Paasch Line	ES
51	Kelly Line	ES
52	Thomsen Line	ES
53	Whiskey Creek Box	ES
54	Lariza Line	ES
55	Hukari Line	ES
56	Kroeger Line	ES
57	Sheppard Line	ES
58	Carey Water Box	ES

Figure 4-7: Inventory of District Overflows

Section 5 – Water Supply

Water Source

The District diverts water during the summer irrigation season through a new recently constructed diversion facility on the East Fork of the Hood River. Obermeyer (inflatable bladder) control gates are raised in the river to create a forebay and river is diverted into the canal system. There are a number of issues associated with the existing water source including the following:

A. The District currently has no storage capability and is completely dependent on the daily live flows within the river for supply during the irrigation season. The ability to provide water storage during winter and spring high runoff flows would augment supply reliability during peak irrigation demand periods.

B. This daily live flow dependency leaves the District patrons vulnerable to inadequate water availability situations during low flow periods or years of drought conditions.

C. The District can divert much of the river during the late summer months (July & August). This is the period when the river flows are the lowest and the District irrigation demand is at its peak. During dry years, the District has experienced periods when it could not divert its full water right.

D. The East Fork of the Hood River is fed by glacial melt from Mount Hood. During late summer periods, there are often high levels of silt and sand in the water from the alluvial slopes of the lower glaciers. This sediment clogs sprinklers and control valves. Opportunities for the patrons to utilize high efficiency sprinkler systems are lost due to these high silt and sand concentrations in the source water.

E. The District has implemented canal piping projects to conserve water and improve reliability of supply. Canal piping, however, does not alleviate sediment problems and will not overcome supply and reliability deficiencies.

F. It is expected that impacts of global warming will exacerbate sediment entrainment problems in Mount Hood runoff with the further retreat of glaciers on the mountain. This would further limit conservation opportunities through high efficiency sprinkler and irrigation systems.

Reliability of Supply

The Hood River drains a watershed on the eastern flank of Mount Hood. River flows vary seasonally, with peak flows occurring in late spring. River flows during peak irrigation season, however, are at their lowest levels. These naturally occurring low river levels limit the amount of water that can be diverted and delivered to District patrons for their irrigation needs. Reduced crop production reduces economic benefit to the County.

Variability in river flow and related limitations on water availability bring focus on conservation and storage as potential methods for improving reliability of supply. Conservation opportunities exist through canal piping/lining projects and the installation of high efficiency sprinkler systems. The District recently completed a large scale piping project that converted approximately 3 miles of open canal into a large diameter low-head pipeline. It is estimated that this project potentially reduced seepage losses in that length of canal approximately 1-2 cfs or about 1% of the total amount of diverted water.

This length of canal that was converted to pipeline represents approximately 10% of the District's overall length of open canal. Remaining potential piping projects could provide an additional 10% of conservation.

Conservation can also be achieved through automated sprinkler systems. Automation is based on climate control capability, accounting for temperature, humidity and soil moisture conditions. These factors determine when a sprinkler system operates and for how long. Small nozzles can also be used to better concentrate irrigation water to specific areas without overspray. Although nozzle configurations can help conserve water and improve supply reliability, they are subject to water quality issues and are limited accordingly.

Water Quality

As mentioned in the sections above, spring and summer river runoff periods carry substantial quantities of silt and sand in the water. Sediment transport in the river has required construction of sediment settling basins throughout the District. These settling basins are necessary to reduce sediment influx into the District water delivery system.

While the settling basins help remove the heavier particles, they do not settle out the fine silts and sediment problems that are increasing and becoming more chronic. These problems correlate to reductions in the glacial ice on the flanks of Mount Hood and may also reflect effects of changing climate patterns. Retreating glacial ice exposes more areas of loose and unstable silt, sand and gravels in the higher mountain areas of the watershed that were previously covered with ice. This loss of ice, which helped stabilize these materials, results in erosion and sediment transport in the glacial runoff water.

Watersheds in the Cascade Mountain Range are revealing more and more erosion, sediment transport and aggregation of sediments in streams originating in the mountain areas. In some cases, aggregation has resulted in substantial changes to the streambeds, leading to increased flood risk. These changes have been linked to changing climate patterns including warming and more intense rainfall. Increased sedimentation and silt transport in the Hood River suggests that the District could be faced with serious water supply issues in the future.

Section 6 – Recommended Conveyance & Distribution Improvements

Dukes Valley Lateral Canal Piping

The piping concept developed for the Dukes Valley Lateral is a gravity piping concept. The short open canal segment between the central traveling screen site and the Cameron Hill water box would be piped with a 42-inch gravity HDPE pipeline to convey the entire lateral flow. The existing steep gravity segment of 24-inch steel pipeline from the Cameron Hill water box down to the lower canal water box on along Bryant Drive would be left in place. Then the remaining 3.78 miles of gravity canal would be converted to HDPE gravity pipeline. The basic components of the project are listed below.

A. Install 42-inch HDPE gravity pipeline within the existing canal alignment from the central traveling screen site to the Cameron Hill water box (approximately 900 linear feet).

B. Remove the existing Cameron Hill water box and provide an enlarged water box at the same location at the entrance to the existing 24-inch steel pipeline. This water box would be equipped with a 42-inch slide gate valve to control flow to the lateral based on water usage measured at the lower water box.

C. Leave the existing 24-inch steel pipeline in place. This existing pipeline is approximately 4,000 linear feet and maximum travel is estimated at approximately 10 minutes. Changes in flow initiated by the Cameron Hill water box slide gate valve will not be seen at this lower water box for this 10 minute period.

D. At the 24-inch pipe daylight along Bryant Drive, a new enlarged water box would be provided that would form the gravity head box for the remainder of the Dukes Valley pipeline. The water box would be sized to accommodate fluctuations in flow and the corresponding 10 minute supply pipeline delay time described above. This water box would be sized at approximately 20 feet wide x 40 long with a 15 inch water level fluctuation allowance. Assuming a 5% flow variation of around 1 cfs, this water box size will provide 1,000 cf of reservoir time or approximately 15 minutes of storage. An emergency spill to Odell Creek would be required in the event the storage allowance is exceeded by flow variation. See the preliminary diagram shown in Figure 6-1 below.

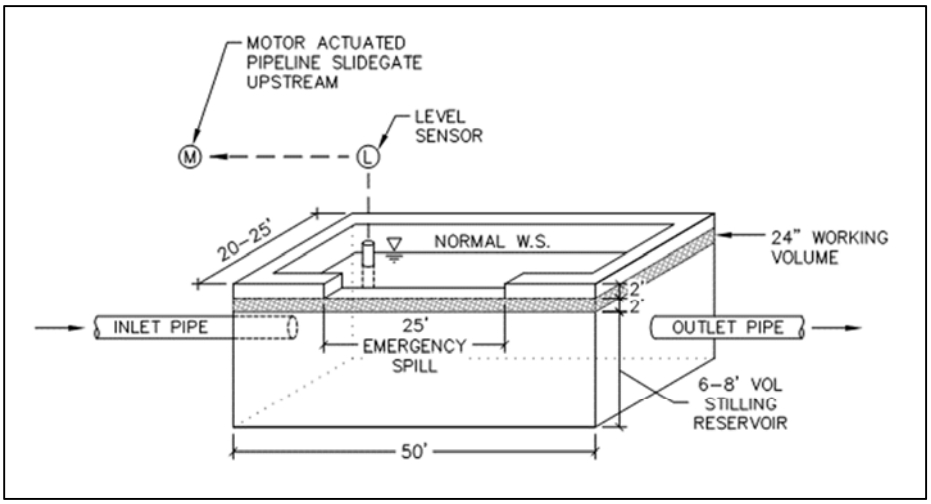

Figure 6-1: Concrete Water Box Stilling Reservoir Diagram

E. A water surface level sensor would be provided in this lower Bryant Drive water box to monitor water usage in the pipeline. Telemetry control would be provided to the Cameron Hill water box slide gate control valve to match water usage.

F. The remaining lower portion of the Dukes Valley open canal would be converted to a single gravity pipeline system (approximately 20,000 linear feet). The pipe diameter would reduce gradually as flow is diverted out of the system as follows:
   - 36 inch diameter: beginning canal section from Bryant Drive water box to the Marsh-Chamberlin diversion.
   - 30 inch diameter: from the Marsh-Chamberlin diversion to the Chamberlin pressure line diversion (Highline Lateral water box).

G. Remaining Highline Lateral: see section below on Highline Lateral Ditch Piping.

H. The proposed pipeline and control improvements for the Dukes Valley lateral are shown schematically in Exhibit 6-2 below in red. Complete drawings are included in Appendix 5.

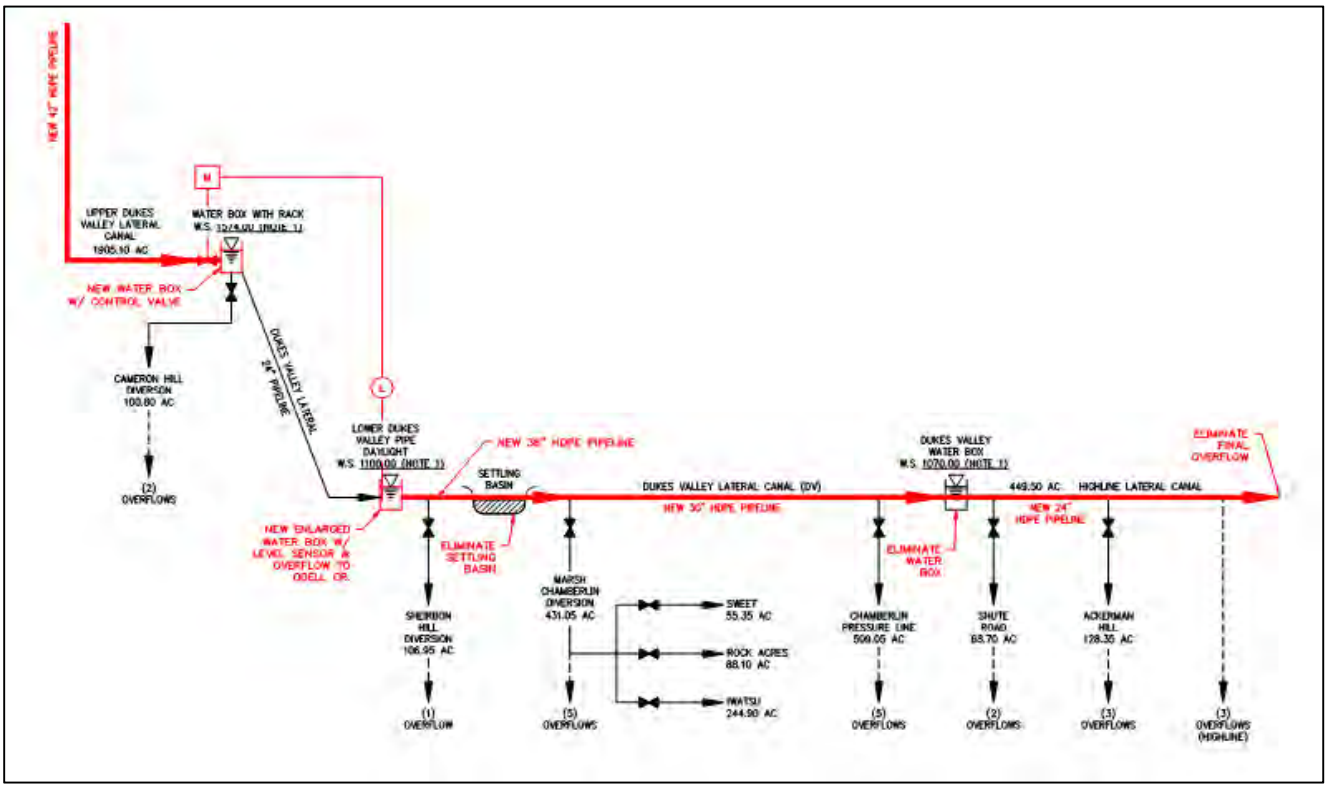

Figure 6-2: Dukes Valley Pipeline Improvements Schematic

Eastside Lateral Canal Piping

Three piping concepts were developed for the Eastside Lateral canal. Option 1 would provide a gravity low-head pipeline system for the Eastside Canal similar to the concept described above for the Dukes Valley canal. Option 2 would develop a pressurized system for the lower piped segment by installing a pressure reducing valve (PRV) assembly a portion of the way downs the existing 30-inch steep steel pipeline. Option 3 would configure the starting water box at a high elevation to provide a low-pressure pipeline system. The three options are described below.

Eastside Lateral Canal Piping – Option 1 (Gravity (Low Head) Pipeline)

The existing steep gravity segment of 30-inch steel pipeline from Water Box #1 down to Water Box #4 near Swyers Drive would be left in place. Then the remaining 5.9 miles of gravity canal would be converted to HDPE gravity pipeline. The basic components of the project are listed below.

A. Leave the existing 30-inch steel pipeline in place. This existing pipeline is approximately 7,500 linear feet and maximum travel is estimated at approximately 15 minutes. Changes in flow initiated by the Water Box #1 slide gate valve will not be seen at this lower water box for this 15 minute period.

B. The existing Water Box #4 would demolished and the 30-inch pipeline would be extended from the current Water Box #4 location to a new enlarged Water Box #4 near Swyers Drive.

C. This new enlarged Water Box #4 would form the gravity head box for the remainder of the Eastside pipeline. The water box would be sized to accommodate fluctuations in flow and the 15 minute pipeline delay time described above. This water box would be sized at approximately 20 feet wide x 50 feet long with an 18 inch water level fluctuation allowance. Assuming a 5% flow variation of around 2 cfs, the water box would provide 1,500 cf of reservoir time or approximately 15 minutes of storage. An emergency spill to Neal Creek would be required in the event the storage allowance is exceeded by flow variation.

D. A water surface level sensor would be provided in this new lower Water Box #4 to monitor water usage in the lower Eastside pipeline. Telemetry control would be provided to the Water Box #1 slide gate control valve to match water usage.

E. The remaining lower portion of the Eastside open canal would be converted to a single gravity pipeline system (approximately 31,000 linear feet). The pipe diameter would reduce gradually as flow is diverted out of the system as follows:
- 54 inch diameter: beginning canal section from Swyers Drive to the Loop Line diversion.
- 48 inch diameter: from the Loop Line Diversion to the canal end at the Whiskey Creek diversion.

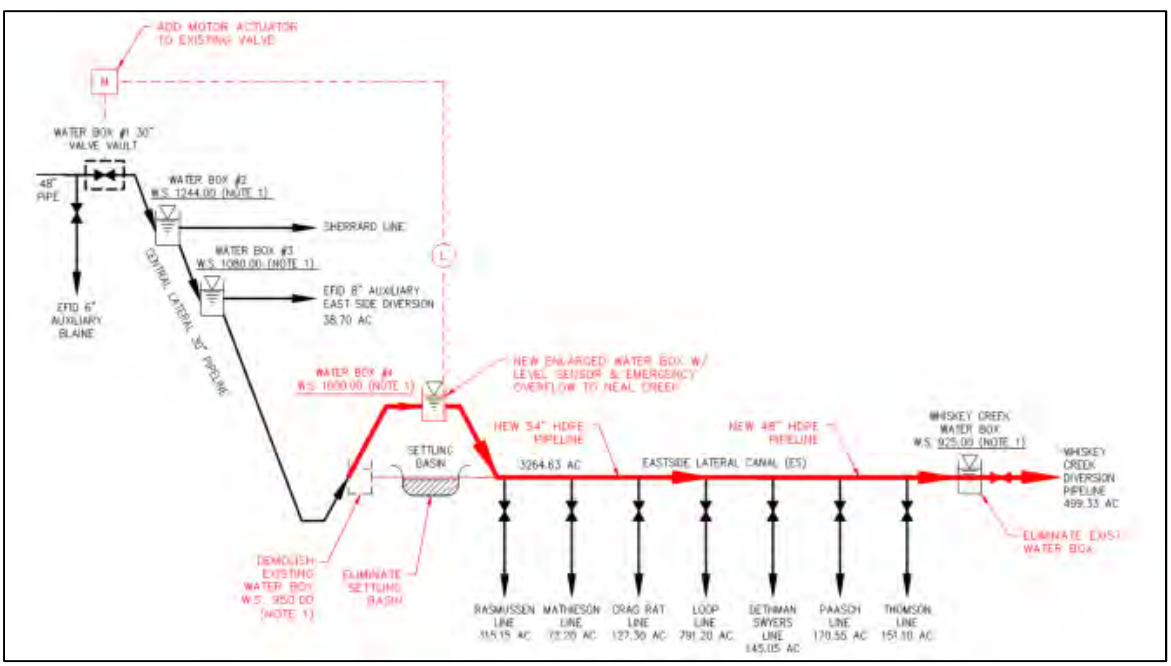

Figure 6-3: Eastside Lateral Pipeline Improvements – Option 1

The proposed pipeline and control improvements for Option 1 of the Eastside lateral are shown schematically in Exhibit 6-3 above in red. Complete drawings are included in Appendix 5.

Eastside Lateral Canal Piping – Option 2 (Pressurized Single Pipeline)

Option 2 for piping the Eastside Lateral canal is similar to Option 1, but would create a pressurized piping system by pressurizing the existing 30-inch conveyance pipe and installing a pressure reducing valve (PRV) station a portion of the way down the hill. The existing steep gravity segment of 30 inch steel pipeline from Water Box #1 down to Water Box #4 near Swyers Drive would be left in place, but would be pressurized. The water boxes would be removed and the remaining 5.9 miles of gravity canal would be converted to HDPE pressure pipeline. The basic components of the project are listed below.

A. Leave the existing 30-inch steel pipeline in place. Water Boxes #2, #3 and #4 would be removed and the pipeline segments connected to form a single continuous pipeline.

B. A new pressure reducing valve assembly would be installed at a key elevation location between the existing Water #2 and Water Box #3 locations. This assembly would reduce the pipeline pressure from 200 psi to 20 psi. This would translate to approximately 80 psi down at the canal level.

C. The remaining lower portion of the Eastside open canal would be converted to a single pressurized pipeline system (approximately 31,000 linear feet). The pipe diameter would reduce gradually as flow is diverted out of the system as follows:

- 42 inch diameter: beginning canal section from Swyers Drive to the Loop Line diversion.
- 36 inch diameter: from the Loop Line Diversion to the end of the canal at the Whiskey Creek diversion.

D. The proposed pipeline and control improvements for Option 2 of the Eastside lateral are shown schematically in Exhibit 6-4 below in red. Complete drawings are included in Appendix 5.

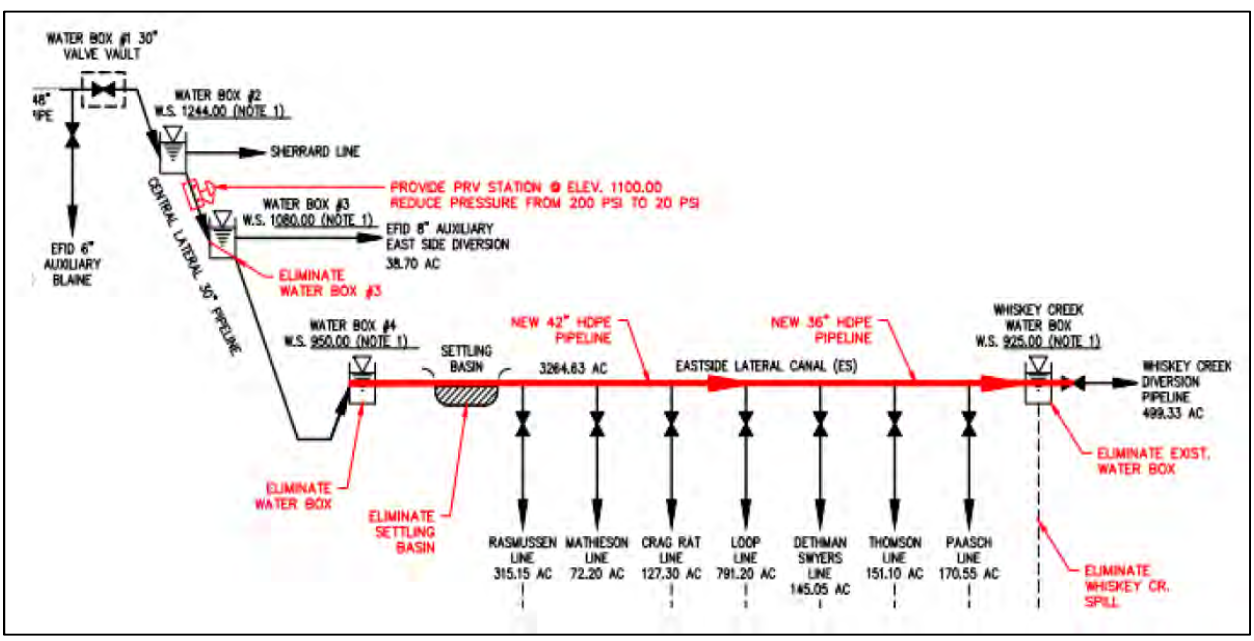

Figure 6-4: Eastside Lateral Pipeline Improvements – Option 2

Eastside Lateral Canal Piping – Option 3 (Low Head Pressurized)

Option 3 for piping the Eastside Lateral canal is similar to Option 1, but would create slightly higher starting pressure in the lateral pipeline. The 30-inch conveyance pipe which feeds Water Box 4 would be extended further uphill above the existing canal elevation approximately 50 vertical feet. This would create a low-head pressurized piping system by establishing the starting head of the new lateral pipeline at about 20 psi. The existing steep gravity segment of 30-inch steel pipeline from Water Box #1 down to Water Box #4 near Swyers Drive would be left in place. The basic components of the project are listed below.

A. Leave the existing 30-inch steel pipeline in place. This existing pipeline is approximately 7,500 linear feet and maximum travel is estimated at approximately 15 minutes. Changes in flow initiated by the Water Box #1 slide gate valve will not be seen at this lower water box for this 15 minute period.

B. The existing Water Box #4 would demolished and the 30-inch pipeline would be extended from the current Water Box #4 location to a new enlarged Water Box #4 near Swyers Drive. This new water box would be located at approximately 50 feet higher elevation.

C. This new enlarged Water Box #4 would form the gravity head box for the remainder of the Eastside pipeline. The water box would be sized to accommodate fluctuations in flow and the corresponding 15 minute supply pipeline delay time described above. This water box would be sized at approximately 20 feet wide x 50 long with an 18 inch water level fluctuation allowance. Assuming a 5% flow variation of around 2 cfs, this water box size will provide 1,500 cf of reservoir time or approximately 15 minutes of storage. An emergency spill to Neal Creek would be required in the event the storage allowance is exceeded by flow variation. This water box would be very similar in configuration to the water box described for the Dukes Valley Lateral. See Figure 6-1 previously.

D. A water surface level sensor would be provided in this new lower Water Box #4 to monitor water usage in the lower Eastside pipeline. Telemetry control would be provided to the Water Box #1 slide gate control valve to match water usage.

E. The remaining lower portion of the Eastside open canal would be converted to a single pipe low head pressure system (approximately 31,000 linear feet). The pipe line would start out with a static head of approximately 20 psi. At the downstream end, the static head would be approximately 30 psi. During peak design irrigation flow, a portion of this available static head would be consumed by pressure losses in the pipeline. The pipe diameters would reduce gradually as flow is diverted out of the system. Initial preliminary pipe sizing was developed as follows:

- Upper Section: 48 inch diameter beginning at the canal section from Swyers Drive to the Loop Line diversion.
- Lower Section: 36 inch diameter from the Loop Line Diversion to the end of the canal at the Whiskey Creek diversion.

F. The proposed pipeline and control improvements for Option 3 of the Eastside Lateral are shown schematically in Exhibit 6-5 below in red.

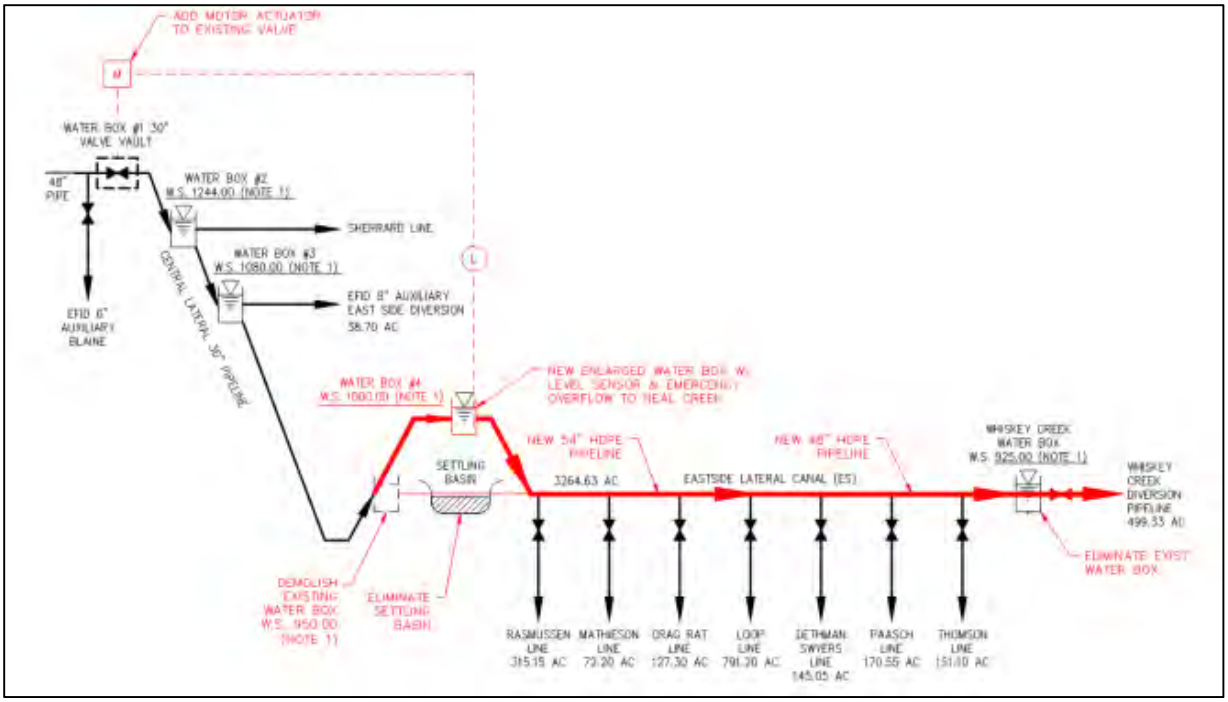

Figure 6-5: Eastside Lateral Pipeline Improvements – Option 3

Main Canal Piping

Duel-Pipeline Concept

The piping concept developed for the Main Canal is a duel pipe gravity piping concept. There are a number of reasons for selecting a duel-pipe scheme in lieu of one large conveyance pipeline. First, the main canal experiences a flow range from as low as 30 cfs early in the season to a peak flow of 120 cfs by late summer. During period of lower flow, a single pipe can be used to keep scouring velocities up inside the pipeline. Secondly, although the Main Canal experiences the highest flows (120 cfs), there are relatively few diversions off the Main Canal (around 8 cfs). The Main Canal essentially acts as a conveyance to the central area of the District.

Atmospheric Break at Travelling Screen Distribution Box Location

In addition to the duel-pipeline concept, another key decision made during the analysis of the System Improvement Plan is that the Main Canal system would also remain a gravity system. Due to the overall topography of the District and the pressure rating of a number of significant piping runs already in place (namely the Central Lateral pipeline), it is not feasible to pressurize the EFID system all the way from the sand trap down to the lower uses near Pine Grove. There will always need to be a hydraulic atmospheric break at the central distribution location where the traveling screens are currently located.

Water Control Box at Christopher Ditch Water Box

Establishing an open atmosphere water box at the Central Distribution Travelling Screens location means that the potential will always exist for emergency spills at that location due to potential changes in irrigation demand. In order to minimize the response time to flow changes, the proposed concept for piping the Main Canalentails a new water control box immediately upstream of the travelling screen

location at the Christopher Ditch Water Box. Automated slide gate valves located at this new water box would respond to changes in flow measured at the Travelling Screens water box. The basic components of the Main Canal pipeline project are listed below.

A. Install duel low head / gravity HDPE pipelines (63 inch and 54 inch diameters) within the existing canal alignment from the sand trap down to the Christopher Ditch Water Box (approximately 28,275 linear feet).

B. Remove the existing Christopher Ditch water box and provide an enlarged water box at the same location. This water box would be equipped with heavy duty slide gate valves for each pipeline to control flow to the lateral based on water usage measured at the travelling Screens Central Distribution site.

C. Complete the duel-pipe conveyance system from the Christopher Ditch Water Box to the Travelling Screen Central Distribution box (approximately 4,000 linear feet).

D. At the Travelling Screen Central Distribution box, a new enlarged water box or storage basin would be provided that would form the gravity head box for the remainder of the District system. This basin box would be sized to accommodate fluctuations in flow and the corresponding 15 minute supply pipeline delay time from the control valves at the Christopher Ditch Water Box. Assuming a 5% flow variation of around 5 cfs, this storage basin would need to be sized to provide around 5,000 cf of reservoir time or approximately 15 minutes of storage. An emergency spill to Neal Creek would be required in the event the storage allowance is exceeded by flow variation.

E. A water surface level sensor would be provided in this Travelling Screen Center Distribution Box to monitor water usage in the downstream pipeline. Telemetry control would be provided to the Christopher Ditch water box slide gate control valves to match water usage.

F. The proposed pipeline and control improvements for the Dukes Valley lateral are shown schematically in Exhibit 6-6 below in red.

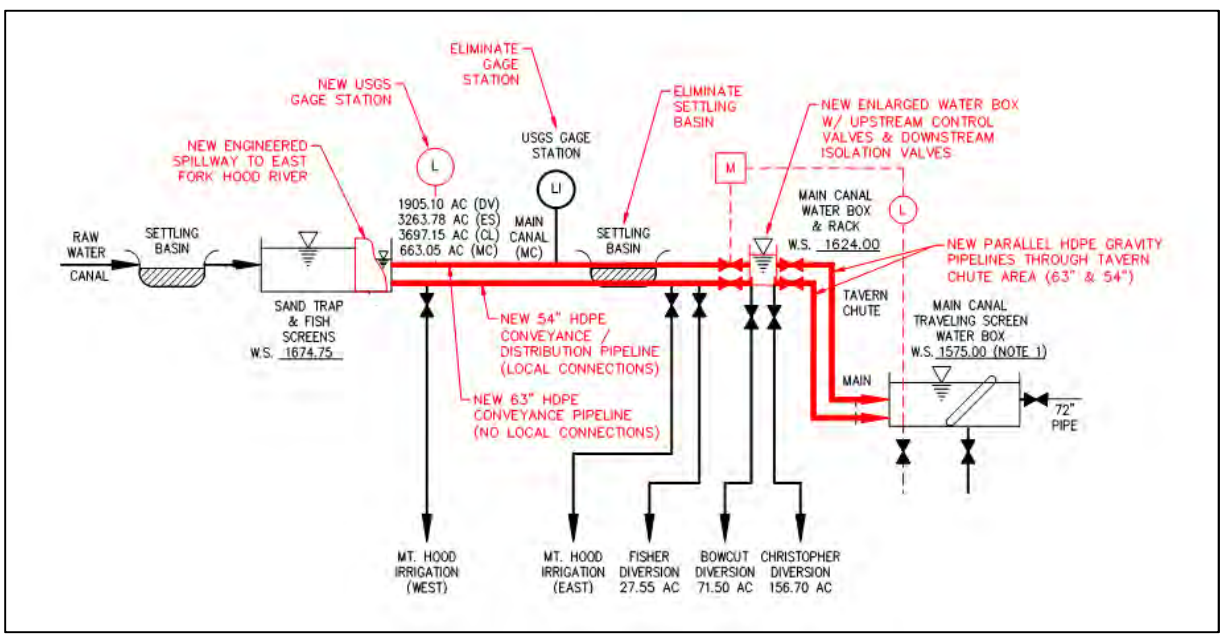

Figure 6-6: Main Canal Pipeline Improvements

Christopher Ditch Piping

At the time of this report, piping improvements for the Christopher Ditch are already underway. This small ditch system is currently being upgraded with a 15-inch pressurized pipeline system to convey approximately 2 cfs of irrigation flow to District patrons along Neal Creek and Upper Booth Hill Roads. The project is being constructed in two phases. Phase 1 was constructed during the late fall of 2014. This portion consisted of low-head 15-inch pressure-rated PVC piping installed within the existing ditch alignment.

The Phase 2 portion is currently in design and is scheduled to be constructed during the summer of 2015. It will be a pressurized system of various pipe sizes that will complete the hook-ups of irrigators along Neal Creek Road and will reduce the current need to divert water down Neal Creek.

Highline Lateral Ditch Piping

The Highline Lateral Ditch is a diversion ditch that begins at the end of the Dukes Valley Lateral. It irrigates approximately 449 acres (including the Shute Road and Ackerman Hill diversions). This acreage equates to a calculated flow requirement for this sublateral of around 5.6 cfs. The total ditch length is approximately 13,400 linear feet.

Preliminary elevation measurements have been inconsistent and have shown the total elevation drop for the ditch from beginning to end ranges from 30-50 feet. The total drop will need to be confirmed in order to confirm an appropriate pipeline pipe size. Using a guideline pipeline flow velocity of around 4 fps, it is anticipated a pipeline system for the Highline Lateral would begin at around a 18 inch diameter and could reduce to a 12 inch diameter approximately 50% down the ditch.

Piping Sub-Laterals

In addition to developing piping concepts for the major open canal segments, an evaluation of the sub-lateral systems was also performed. Many of these sub-laterals are either open ditch or in need of re-piping due to pressure requirements once the main laterals are piped.

The following Figure 6-7 is a preliminary list of the sub-lateral piping improvement projects. This summary is preliminary and is based on consultation with EFID staff. Exact distances and piping condition has not been vetted in the field. Preliminary construction costs have been estimated for these piping projects and are summarized in the section below.

EFID SUB-LATERAL PIPING PROJECTS (PRELIMINARY DATA)					
No.	Sub-Lateral	System	Piping (lf)	Approximate Pipe Size (based on 5 fps)	PRV Assemblies (ea)
1	Christopher	Main Canal	(in progress)		n/a
2	Mooney	Main Canal	3,000		n/a
3	Cameron Hill	Dukes Valley	1,500	6”	n/a
4	Cherry Hill	Dukes Valley	1,200	3”	1
5	Sheirbon Hill	Dukes Valley	8,000	6”	1
6	Sweet Line	Dukes Valley	1,500	4”	1
7	Rock Acres	Dukes Valley	1,000	4”	0
8	Wheeler Road	Dukes Valley	0	6”	1
9	Marsh-Chamberlin	Dukes Valley	13,000	18”	2
10	Ackerman Hill	Dukes Valley	(in progress)	8”	n/a
11	Shute Road (new line to Summit)	Dukes Valley	1,500		1
12	Highline	Dukes Valley	(see below)		
13	Winklebleck	Central Lateral	10,000	6”	2
14	Gilkerson	Central Lateral	5,000	6”	2
15	Bietler	Central Lateral	8,000	6”	2
16	PMSW	Central Lateral	0	8”	1
17	Chipping Line	Central Lateral	25,000	16”	3
18	Oana	Central Lateral	30,000	24”	4-5
19	Allison	Central Lateral	4,500	8”	1
20	Rasmussen	Eastside Canal	2,000	12”	1
21	Craig Rat	Eastside Canal	10,000	8”	1
22	Loop	Eastside Canal	0	16”	2
23	Dethman Swyers	Eastside Canal	0	8”	2
24	Paasch	Eastside Canal	1,500	8”	1
25	Thomson	Eastside Canal	1,000	8”	1
26	Lariza	Eastside Canal (Whiskey Creek)	2,000	6”	1
27	Panorama Point	Eastside Canal (Whiskey Creek)	2,000	2”	1
28	Hukari	Eastside Canal (Whiskey Creek)	0	4”	1
29	Tiffeny	Eastside Canal (Whiskey Creek)	10,000	2”	2

Figure 6-7: Sub-Lateral Piping

Sand Trap Bypass Improvements

A general infrastructure project to improve the existing sediment sluicing and bypass facilities at the existing sand trap, along with some general pipe replacements, has been discussed and envisioned by the District for a number of years since the sand trap facility was first completed. The general components of the project are listed as follows:

A. Provide improved hydraulic bypass downwell and pipe return for bypass flows (including debris, fish and sediment) back to the river. The new improvements would incorporate improved hydraulics to minimize potential injury or delay for any fish entrained in the bypass flow.

B. Configuration of a new sediment sluicing system that would allow the District to take a settling bay offline and flush sediment if necessary without impacting the hydraulic operation of the overall sand trap accepted flow to the District.

C. Replacement of the two existing 36-inch overflow HDPE pipe lines immediately upstream of the sand trap facility. These pipe lines were originally constructed with N-12 corrugated HDPE material and have exhibited excessive leaking at the pipe joints over the years.

D. Replacement of the five short transport pipe segments connecting the sand trap bays to the raw intake water forebay. These pipe lines were originally constructed with N-12 corrugated HDPE material and have exhibited excessive leaking at the pipe joints over the years.

Sand Trap Bypass Improvements – Option 1 (External Sluicing Manifold)

Two options were developed to incorporate a new sediment sluicing system as part of the overall bypass improvements project. Option 1 (Sheet C-8 in Appendix 5) provides an exterior retrofit pipe manifold system that would separate sluicing flows outside the screen toe pool. Sediment would be separated and continually sluiced using this dedicated manifold system. Sluicing flows would rejoin the normal bypass flows at the downstream end of the downwell just before entering the return pipe to the river.

Sand Trap Bypass Improvements – Option 2 (Internal Sluicing Manifold)

The second sediment sluice option (Sheet C-9 in Appendix 5) would retrofit the existing sand trap bays to provide an interior sluicing manifold pipe. A new 24-inch ductile iron pipe would be installed on the slab bottom at the downstream ends of the settling bays. The dividing concrete walls would be core drilled to accommodate the manifold and 24-inch sluicing slide gate valves would be provided for sluicing each bay. Sluicing flows would be routed to one of the 36-inch overflow pipes in lieu of the bypass river return pipe.

Sand Trap Sediment Settling Improvements

In addition to the main sand and sediment settling facility, there are also various small settling basins at the beginning of each of the main lateral open canals (Main, Dukes Valley and Eastside). These canal sediment basins will be eliminated as the canals are piped. In addition, the District continues to struggle with sediment removal in their diverted water and additional sediment settling capacity would be a big benefit. For these reason, a concept was developed to provide an enlarged sediment settling basin.

This proposed basin (shown on Sheet C-7 in Appendix 5) would be located immediately downstream of the existing sand trap facility. The existing canal would be left in place around the new reservoir to provide a bypass in the event the settling reservoir is taken off line. See Figure 6-8 below. This new basin would provide added removal ability to replace the small open canal settling basins. In addition, the enlarged reservoir would provide enough residence time to attempt to remove some of the courser silt materials that are not settled out in the smaller existing facilities. See Figures 6-9 and 6-10 for a comparison current and proposed residence times for sediment settling facilities.

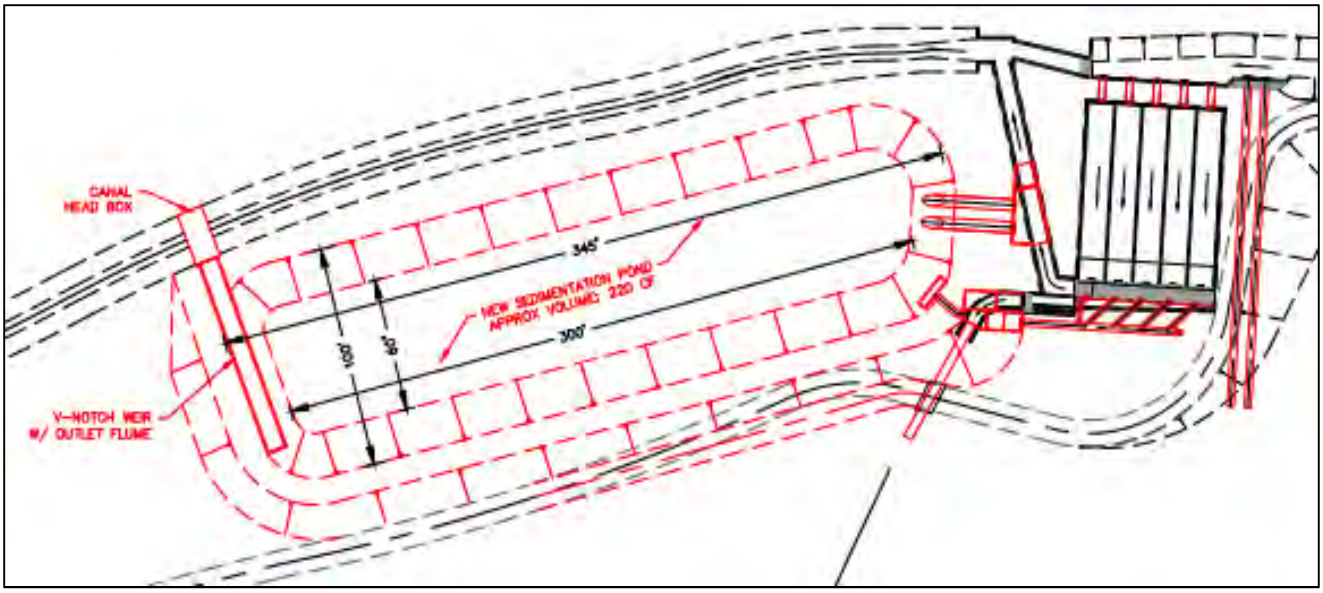

Figure 6-8: New Proposed Sediment Settling Basin

Settling Facility	Approx Vol. (cf)	Flow (cfs)	Res. Time (min)	Media Settled
Existing Raw Water Canal	36,000	135	4.4	Fine Sand
Existing Sand Trap Bays	29,000	135	3.6	Fine Sand
Exist. Main Canal Settling Basin	42,000	120	5.8	Fine Sand
Misc. Lateral Settling Basins	15,000	120	2.0	Fine Sand
			15.8	

Figure 6-9: Existing Settling Basins

Settling Facility	Approx Vol. (cf)	Flow (cfs)	Res. Time (min)	Media Settled
Existing Raw Water Canal	36,000	135	4.4	Fine Sand
Existing Sand Trap Bays	29,000	135	3.6	Fine Sand
New Sand Trap Sediment Basin	225,000	120	31.3	Course Silt
			39.3	

Figure 6-10: Proposed New Settling Basins (After Canal Piping)

Proposed District System Improvements Preliminary Cost Estimates

Preliminary construction cost estimates were developed for the various proposed District improvement projects. This estimates should be considered conceptual and for approximately project ranking only. The estimates were developed on a unit cost basis in 2015 dollars and do not include any escalation to future dates. Project estimate totals are summarized in Figure 6-11 below. Estimate back-up sheets are included in Appendix 6.

	Approximate Estimated Construction Cost
Dukes Valley Lateral Canal Piping	$5,251,750
Eastside Lateral Canal Piping – Option 3	$10,462,550
Main Canal Piping	$22,388,013
Highline Lateral Piping	$914,810
Sand Trap Bypass Improvements – Option 2	$335,465
Sand Trap Settlement Settling Improvements	$695,500
Piping Sub-Laterals (Total)	$4,632,420
PRV Sub-Laterals (Total)	$226,850

Figure 6-11: Proposed New Settling Basins (After Canal Piping)

System Improvements Implementation Prioritization

The District improvement projects outlined above were prioritized based on a simple prioritization tool summarized below.

No	Prioritization Criteria	Priority Metric	Maximum Possible Points	Point Scoring
1	Construction Cost per CFS	($/CFS)	20	Lowest cost project receives 20 points. Remaining projects receive proportional point score based on proportional cost.
2	Maintenance Savings per CFS	($/CFS)	20	Highest maintenance cost savings project receives 20 points. Remaining projects receive proportional point score based on proportional savings.
3	Water Conservation Per CFS	% (CFS/CFS)	20	Highest percentage water conservation percentage receives 20 points. Remaining projects receive proportional score based proportional percent conservation.
4	Returning Flow to River	Eliminating Downstream Spill First	20	Longest return flow river distance downstream from diversion receives highest point score. Remaining projects receive proportional scores.
5	Operational Improvements	Subjective	20	Subjective score based on operational benefits: settling sediment, improved flushing to eliminate current practice of drawing down canal, etc.
			100	

Figure 6-12: Project Prioritization Criteria

The prioritization of projects is not yet completed. This section will be provided in a future draft of this report.

Section 7 – Telemetry Monitoring and Control Improvements

Initial Telemetry Sites & Phasing

In coordination with reported EFID operations and practices, a preliminary list of potential telemetry sites was developed as shown in the Figure 7-1 below. The selection of initial telemetry is fundamentally based on the immediate control needs as well as basic operational needs as future District piping improvements are constructed. The development of a comprehensive telemetry SCADA system is conceived to be constructed in phases. For the purposes of planning and estimating in this System Development Plan, the following phases were established.

A. Phase 1: Existing Facilities – provide basic operational logic connectivity at key points in the District to control functions in the existing configuration.

B. Phase 2: Proposed New Piping Improvements – provide operational logic connectivity for proposed new canal piping and sediment settling projects.

C. Phase 3: Overflows – provide level sensors to measure weir overflows. (These would gradually be phased out as the District system is piped.)

D. Phase 4: Metering – provide measurement and data logging at key distribution nodes throughout the District.

The following selection of proposed sites and instrumentation is targeted for Phases 1 and 2 only. Further development of the telemetry system for Phase 3 and 4 needs is beyond the scope of this Plan.

No.	Site	Location	Northing	Easting	Elevation	Power	Telephone
1	Main Headworks	Highway 35	45.5093	121.5647	1721.0	Exist	1,200’
2	Sand Trap Fish Screens	Toll Bridge Road	45.5154	121.5660	1674.0	1,000’	1,000’
3	Christopher Box	Highway 35	45.5797	121.5526	1630.0	100’	100’
4	CL Distribution (Screens)	Highway 35	45.5885	121.5529	1575.0	Exist	Exist
5	Cameron Hill	Highway 35	45.5910	121.5529	1574.0	800’	1,500’
6	Lower Dukes Valley Box	Central Vale Road	45.5969	121.5652	1100.0	200’	200’
7	Central Lateral Box 1	Furrow Drive	45.5974	121.5158	1541.0		1,100’
8	Central Lateral Box 4	Swyers Driver	45.6135	121.5057	950.0	100’	100’
9	USGS Gage Station	Highway 35	45.5235	121.5679	1653.0	100’	100’

Figure 7-1: Basic Telemetry Sites

A brief description and photograph figures of each of the sites is listed below.

1. Main Headworks

Main river intake site. Immediate telemetry needs here include forebay measurement and position monitoring of the headworks' intake slidegates. Ultimately this site could employ motor actuators on the valves with the potential for manual or automated remote operation.

Figure 7-2: Headworks Site

2. Main Headworks

Main river intake site. Immediate telemetry needs here include forebay measurement and position monitoring of the headworks' intake slidegates.

Figure 7-3: Sand Trap Settling Bays

Figure 7-4: Sand Trap Bypass Weir

Ultimately this site could employ motor actuators on the valves with the potential for manual or automated remote operation.

3. Christopher Water Box

Along Highway 35, this new enlarged water box location would control the main downstream flow control slidegate valves for the future main canal pipelines. This location is considered a Phase 2 telemetry site.

Figure 7-5: Christopher Water Box Location

4. Central Lateral Distribution Site (Travelling Screens)

The main distribution site would have a number of telemetry opportunities including monitoring overflows to Neal Creek, measurement of the travelling screens forebay and tailwater and remote slidegate operation.

Figure 7-6: Central Distribution Site

5. Cameron Hill Water Box

The Cameron Hill water box is considered a Phase 2 site. Automated controls at this location would actuate a new flow control valve to match demand in the Dukes Valley lateral once the canal is piped.

Figure 7-7: Cameron Hill Water Box

6. Lower Dukes Valley Water Box

The beginning of the Dukes Valley canal is the planned location for a future water control box. As described in the proposed improvements section above, when the canal is piped, a large surge basin would be installed at this beginning site to monitor flow and measure water level in the box. This is also a Phase 2 site.

Figure 7-8: Dukes Valley Water Box

7. Central Lateral Water Box 1

The Central Lateral Water Box 1 is a Phase 2 site. Proposed improvements at this location would involve installation of a motor actuator on the existing knife gate valve and remote automated control to match demand in the Eastside Lateral once the canal is piped.

Figure 7-9: Central Lateral Water Box 1

8. Central Lateral Water Box 4

The beginning of the Eastside canal is the planned location for a future water control box. As described in the proposed improvements section above, when the canal is piped, a large surge basin would be installed at this beginning site to monitor flow and measure water level in the box. This is also a Phase 2 site.

Figure 7-10: Central Lateral Water Box 4

9. USGS Gage Station

As an informational input, the existing USGS canal gage station could be added to the SCADA system. This would be Phase 1 site and would be removed in the future once the Main Canal is piped.

Figure 7-11: Main Canal USGS Gage Station

Using these basic sites and the future infrastructure District improvement concepts developed in the previous section, a preliminary list of telemetry inputs was developed as summarized in Figure 7-12 below.

Instrumentation Inputs

The East Fork Irrigation District currently has no remote telemetry or automated systems. All water measurements and controls are made manually and require constant ditch monitoring and observation of key node points in the canal system by District personnel. During a series of work sessions with the District, a preliminary list of instrumentation was developed as shown in Figure 7-12. Input from these sites would provide the fundamental dashboard that would give the District a real time picture of current water use and necessary adjustments. As noted above, this list is focused on Phase 1 and 2 improvements only.

PHASE 1 & 2 PRELIMINARY INSTRUMENTATION (INPUTS)						
Site	Location	Instrmt.	Function	Data Logging	1	2
Headworks	River Forebay WS	Level	Measure forebay water surface	•	•	
Head works	Intake Slidegate	Position	Monitor slidegate #1 position		•	
Headworks	Intake Slidegate	Position	Monitor slidegate #2 position		•	
Headworks	Intake Slidegate	Position	Monitor slidegate #3 position		•	
Headworks	Intake Slidegate	Position	Monitor slidegate #4 position		•	
Headworks	Obermeyer Gate	Position	Monitor gate #2 weir elevation		•	
Sand trap	EFID Slidegate	Position	Monitor district main valve		•	
Sand trap	Bypass Downwell	Level	Measure bypass water surface	•	•	
Sand trap	Settling Pond WS	Level	Measure settling pond WS	•		•
USGS Gage	Main Gage WS	Level	Correlate WS level to flow		•	
Christopher WB	MC Slidegate	Position	Monitor slidegate #1 position			•
Christopher WB	MC Slidegate	Position	Monitor slidegate #2 position			•
CL Distribution	Screen Forebay	Level	Monitor WS (plugged screen)		•	
CL Distribution	Screen Tailwater	Level	Monitor WS (plugged screen)		•	
CL Distribution	Screen Motor	Alarm	Motor run trouble alarm		•	
CL Water Box 1	Slidegate	Position	Monitor slidegate position			•
Cameron Hill WB	Slidegate	Position	Monitor slidegate position			•
Lower DV WB	Water Surface	Level	Monitor water surface			•
CL Water Box 4	Water Surface	Level	Monitor water surface			•

Figure 7-12: Preliminary Phase 1 and Phase 2 Instrumentation Inputs

During the development of this report, it had not been established if there was benefit in attempting to monitor overflows from the irrigation system. While the data would be useful in management of the District, the overflows will in theory be gradually eliminated as the open canal systems are piped. The cost-

benefit of expending resources to install telemetry has not been explored, but a preliminary list of major overflow sites (identified as a group as Phase 3) is listed in Figure 7-13 below.

PHASE 3 PRELIMINARY INSTRUMENTATION (INPUTS) (OVERFLOWS)				
Site	Location	Instrmt.	Function	Data Logging
Sand trap	Bypass Downwell	Level	(already included in Phase 1)	•
CL Distribution	Neal Creek Overflow Weir	Level	(already included in Phase 1)	•
Dethman Ridge (DeGroot)	Overflow Weir	Level	Monitor overflows to Neal Creek	•
Marsh Chamberlin	Overflow Weir	Level	Monitor overflows Odell Creek	•
Chamberlin	Overflow Weir	Level	Monitor overflows to Odell Creek	•
Loopline Lage	Overflow Weir	Level	Monitor overflows to Hood River	•
Whiskey Creek Box	Overflow Weir	Level	Monitor overflows to Whiskey Creek.	•

Figure 7-13: Preliminary Phase 3 (Overflows) Instrumentation Inputs

As a final planning exercise, the notion of developing some level of flow metering throughout the District was discussed with EFID personnel. As a future Phase 4 plan, a preliminary list of major metering points was developed and is summarized below in Figure 7-14.

PHASE 4 PRELIMINARY INSTRUMENTATION (INPUTS) (METERING)				
Site	Location	Instrmt.	Function	Data Logging
Sand trap	MC Pipeline 1	Meter	Measure/record flow.	•
Sand trap	MC Pipeline 2	Meter	Measure/record flow.	•
CL Distribution	Central Lateral Pipeline	Meter	Measure/record flow.	•
Central Lateral	Chipping Line Diversion	Meter	Measure/record flow.	•
Central Lateral	Oana Line Diversion	Meter	Monitor/record flow.	•
CL Distribution	Dukes Valley Lateral	Meter	Measure/record flow.	•
Dukes Valley	Marsh Chamberlin	Meter	Measure/record flow.	•
Eastside	Loop Line Flow Meter	Meter	Measure/record flow.	•
CL Water Box #4	Eastside Flow Meter	Meter	Measure/record flow.	•
Eastside	Rasmussen Line	Meter	Measure/record flow.	•

Figure 7-14: Preliminary Phase 4 (Metering) Instrumentation Inputs

Actuation / Control Outputs

Once the input listing was developed, a preliminary list of control outputs could be determined. Figure 7-15 below summarizes the early concepts discussed with EFID personnel.

PRELIMINARY ACTUATION/CONTROLS (OUTPUTS)						
Site	Location	Device	Operation	Input	1	2
Headworks	Intake Slidegate #1	Motor Actuator	Automated	Water surface level sensor @ Sedimentation Basin	•	
Headworks	Intake Slidegate #2	Motor Actuator	Manual		•	
Headworks	Intake Slidegate #3	Motor Actuator	Manual		•	
Headworks	Intake Slidegate #4	Motor Actuator	Manual		•	
Christopher WB	CL Pipeline Slidegate 1	Motor Actuator	Automated	Water surface level sensor @ Traveling Screen		•
Christopher WB	CL Pipeline Slidegate 2	Motor Actuator	Manual			•
CL Water Box 1	Water Box 1 Slidegate	Motor Actuator	Automated	Water surface level sensor @ Water Box 4		•
Cameron Hill WB	Cameron Hill WB Slidegate	Motor Actuator	Automated	Water surface level sensor @ Lower DV Water Box		•

Figure 7-15: Preliminary Actuation Control Outputs

Telemetry System Preliminary Programming Objectives

During the development of the SIP, District staff were consulted regarding their preliminary plans and objectives for a new telemetry system. The following is a concept level list of initial system objectives.

A. System to be a standard configuration common for local vendors or contractors to service.

B. System should be an “off the shelf” software like Wonderware or Rockwell, not customized program.

C. System should be able to start small and add onto in the future. In addition to potentially adding devices, additional sites may be added over time.

D. Preliminary observation and analyses of the sites indicates radio reception is poor. Telephone service has been researched and is feasible for nominal cost at all the Phase 1 sites (9 sites). System should incorporate standard telephone lines for data communication.

E. Cell reception is challenging at a number of sites and reliability would not be as good as telephone.

F. System needs to be able to accommodate implications if power or telephone service is interrupted.

G. System needs ability for remote access, both for users (lap tops or phone app) and service providers (program troubleshooting).

H. The proposed district improvements are discrete operations for each of the three main laterals. There may be benefit to considering a "decentralized" system in lieu of a centralized one.

I. System should likely consider PLC's at each site that could be added onto in the future.

J. System needs to anticipate the need for data-logging, although it is limited and only at a few sites.

K. The District has limited computer IT support. A new system's general human interface should be very straightforward.

L. At several of the key sites, security cameras may be desired. System selection should at least consider if this could be included or would it need to be a separate system.

Telephone Service Availability at Initial Telemetry Sites

The initial list of telemetry sites was researched with Dirk Pritchett at Century Link in Hood River to confirm the feasibility of telephone service at the sites. Based on the locations, Century Link developed an analysis of feasibility and utility service cost to provide phone service to each site. Hardline telephone service is available at all of the sites for a reasonable nominal cost. The analysis is summarized in Figure 7-16 below. The utility cost estimates listed in the table represent the CenturyLink fee to provide service only. Any additional costs the EFID would bear for earthwork, utility trenching and restoration is not reflected.

No.	Site Name	Site Location	Telephone Service	Utility Cost
1	Main Headworks	Highway 35	Nearest telco 1,200 lf at Smullin Drive pedestal (032306-9012 IPID#2140). Follow HREC aerial power lead majority crossing private property.	$2,195.00
2	Sand trap Fish Screens	Toll Bridge Road	Nearest telco 1,000 lf at Highway 35 access point pole (032300-8 IPID#1095). Bury along access road private property.	$2,195.00
3	Christopher Box	Highway 35	Nearest telco 100 lf at Pinemont Drive & Highway 35 intersection access point pedestal (060000-9063 IPID#4424). Bury to pedestal within public ROW.	NC
4	CL Distribution (Screens)	Highway 35	Nearest telco at Highway 35 access road access point pedestal (060000-9004 IPID#3978). Bury along access road private property.	$687.50
5	Cameron Hill	Highway 35	Nearest telco 1,500 lf at Highway 35 access point pedestal (066000-9002 IPD#15976). Follow HREC aerial power lead 594 lf in public ROW. Bury 907 lf along private access road.	$1,983.50
6	Lower Dukes Valley Box	Central Vale Road	Nearest telco 200 lf at Central Vale Road access point pedestal (070000-9051 IPID#3745). Bury to pedestal within public ROW.	NC
7	Central Lateral Box 1	Furrow Drive	Nearest telco 1,100 at Furrow Road access point pedestal (040827-9002 IPID#4375). Bury along access road private property.	$2,420.00

No.	Site Name	Site Location	Telephone Service	Utility Cost
8	Central Lateral Box 4	Swyers Driver	Nearest telco 100 lf at Swyers Drive access point pedestal (044503-9003 IPDI#4557). Bury to pedestal within public ROW.	NC
9	USGS Gage Station	Highway 35	Nearest telco 100 lf at Highway 34 & Toll Bridge Road intersection access point pole (032300-18 IPID#2494). Aerial span to pole within public ROW.	NC
				$9,481.00

Figure 7-16: Century Link Telephone Service

Telemetry Hardware Platform Options

Based on the above initial programming and objectives, DC Engineering was retained to investigate potential SCADA platforms and provide recommendations for system selection. Multiple options are available for the equipment at each remote monitoring and control site. Some sites will be monitoring only and will have a very small number of inputs. Other sites will be both monitoring and control and have more inputs. Below are alternative approaches to the hardware required to provide the system functionality.

<u>Alternative No. 1 – Allen Bradley MicroLogix PLC Panel at Each Site</u>

Install an Allen Bradley MicroLogix PLC panel at each site. This alternative allows for monitoring or control at any site and keeps all sites consistent. It would provide EFID with a lot of versatility for future expansion, including addition of devices at various sites or the potential to add new sites.

Advantages:

A. The AB MicroLogix platform is very robust and widely used, requiring very little maintenance, and because of install base a large number of technicians are familiar with the platform.
B. With a PLC at each site, system control can be maintained even during network outages.
C. Reduced program development time and cost at system startup.
D. System is easily customizable, offering analog, digital and specialty modules.
E. Full support for standard EtherNet/IP networks.

Disadvantages:

A. Higher cost due to having a controller at each site.
B. The MicroLogix line of PLCs has been out a number of years and newer products with additional capabilities are available. AB fully supports the MicroLogix line currently.
C. Providing full PLC panels at each site would require longer installation time.

<u>Alternative No. 2 – Central Allen Bradley CompactLogix PLC at District Office with I/O at Each Remote Site</u>

A slightly less costly alternative would be to install an AB CompactLogix PLC with distributed I/O at each site. This would provide a very powerful central PLC that would both monitor and control all of the remote sites.

Advantages:

A. The AB CompactLogix platform is very robust and widely used, requiring very little maintenance, and because of install base a large number of technicians are familiar with the platform.

B. Reduced program development time and cost at system startup.
C. System is easily customizable, offering analog, digital and specialty modules.
D. Full support for standard EtherNet/IP networks.

Disadvantages:

A. Less versatility for future expansion as the I/O at the remote sites is "dumb." I/O that does not have a local processor for control functions.
B. With a central PLC, if the network connection to the central PLC goes down, control of the whole system is lost.

Alternative No. 3 – Micro800 PLC Panels at Each Site

Installation of Allen Bradley Micro800 PLC system control panels at each site. This is the most cost effective solution that would still offer good future expansion capabilities.

Advantages:

A. Less costly than MicroLogix and CompactLogix PLC's but still offer much of the same versatility.
B. With a PLC at each site, system control can be maintained even during network outages.
C. Due to the low cost of the controller each site can have very similar and standard setup.
D. Sites with fewer I/O points could be equipped with the smaller 820 controllers, which offer up to 20 points. Larger sites could be equipped with the Micro850 controllers which offer 24 or 48 points, and have the ability to add I/O expansion to support up to 132 points if needed.
E. Controllers are capable of data-logging, remote access, and communication via Ethernet/IP.

Disadvantages:

A. Not as many options for modules as a MicroLogix or CompactLogix systems offer.
B. Less widely used system, so fewer trained technicians.
C. Programming software is not as capable as others for complex control routines.

Software Analysis

To meet the system requirement of standard Supervisory Control and Data Acquisition (SCADA) system software for a telemetry project like this, a few vendors have very quality solutions. The two main vendors that would give very robust and flexible solutions that many programmers are familiar with and able to work on are WonderWare and Rockwell Software. Both vendors offer HMI software that can easily communicate with all three of the alternative hardware solutions.

This solution would include either WonderWare InTouch HMI software, or Rockwell FactoryTalk View SE HMI software. This software would be installed on a local PC at the district office, and would have an operator workstation with computer monitor displaying system status. Alarm notification software would also be installed on this PC and will be configured to notify operators on a priority schedule. Notifications can be either phone calls or emails.

Data logging is fairly limited and will be setup as local data logging through the HMI software, and will not include a separate historian as they add a significant cost. The HMI software will also include a component that will web enable the HMI, allowing operators to remotely access and interact with the system through secure web connected devices such as laptops and tablets.

DC Engineering performed a radio path study and due to the terrain and locations of the sites, we have determined that the terrain is not ideal for radio communication. The study showed that there is virtually no line-of-sight between locations, making reliable communication via radios almost impossible without the additional cost of adding antenna towers.

For many of the same reasons that radio communication is not ideal for the terrain, cellular communication would have the same issue of unreliability due to poor signal at most of the sites.

The best solution for communication between sites would be to run a phone line from the nearest existing service to each of the remote sites. The additional cost of installing and maintaining these phone lines would offset the significant costs of antenna towers or possible communication failures due to unreliable signal via cell phone or radio. A drawback to the phone line system is the monthly phone line fees.

System Recommendations & Cost Estimates

DC Engineering has reviewed and evaluated the various hardware, software, and communications devices to meet the telemetry system requirements. For the hardware solution, we recommend alternative number 3 – Allen Bradley Micro800 PLC panels at each site. Alternative 3 is a very cost effective solution that maintains high reliability and flexibility with expandable controllers at every site.

For the SCADA software solution, both WonderWare and Rockwell Software are very comparable. Due to Rockwell Software being an Allen Bradley product and the PLCs also being Allen Bradley, we recommend using the Rockwell Software. This will allow very easy and tight integration between the remote sites and the central SCADA system. Many system integrators are familiar with this software and will be able to implement and make changes to the system in the future.

The communications with the remote sites are a key component of this project. Our analysis of the site layouts clearly shows that radios and cell phone systems will be very unreliable. Research into phone line availability shows that all sites can be reached with phone service. Phone lines will allow installing remote access modems to give dial in access to each of the PLCs. Utilizing the hardwired phone connections will give the best possible communications reliability.

Cost estimate summaries have been developed for each option and are presented in Figure 7-17 below.

TELEMETRY SYSTEMS PRELIMINARY COST ESTIMATES					
Option	Hardware & Instruments	Panels	Installation	Design	Subtotal
1	35,790	8,100	6,840	20,000	70,730
2	39,580	8,100	6,840	20,000	74,520
3	31,170	8,100	6,840	20,000	66,110

Figure 7-17: Telemetry System Cost Estimates

Section 8 – Water Storage Improvements

This section currently being developed by Watershed Professionals Network (WPB)

Section 9 – Hydroelectric Analysis

Background

In late 2007, Hood River County initiated a hydroelectric study of 13 pre-identified sites around the county. These sites were all identified based on previous municipal water and irrigation water pipelines that were already in place as well as open canal sites where penstocks might be installed. Two of the sites identified in the study were within the East Fork Irrigation District system. These were identified as follows:

Central Lateral Pipeline (Neal Creek) Site

The proposed site is located where an existing 30-inch high pressure steel pipeline was already in place and a FERC 'conduit exemption' licensing process could be utilized.

Dukes Valley Pipeline (Odell Creek) Site

The proposed site is located where an existing 24-inch high pressure steel pipeline was already in place and a FERC 'conduit exemption' licensing process could be utilized.

Winzler & Kelly was retained to compile the hydroelectric study and these two sites were evaluated for feasibility and payback period as part of the work. A summary of the findings is presented in the sections below.

In addition, in 2013 the District commissioned a Hood River Basin Water Conservation Assessment. A brief hydropower analysis was included by Watershed Professionals Network LLC who were engaged to develop the assessment. As part of their work, Watershed Professionals preliminarily evaluated a potential third hydro power site on the Main Canal of the District near the Tavern Chute location. A brief summary of their findings is also presented below.

Central Lateral Pipeline Neal Creek Site

Approximately 6 miles down the District's open canal system, there is a major lateral called the Central Lateral pipeline. A seasonal peak flow of approximately 80 CFS enters this piped lateral. Roughly 50% of that flow is diverted to water users along the pipeline, but at the end of the lateral a newly constructed 30-inch high pressure steel pipeline conveys the remaining 40 CFS to a lower (Eastside) lateral in the District. This canal system is approximately 600 feet lower in elevation. The basic water flow in the pipeline throughout the irrigation season used for the analysis is shown in the graph below.

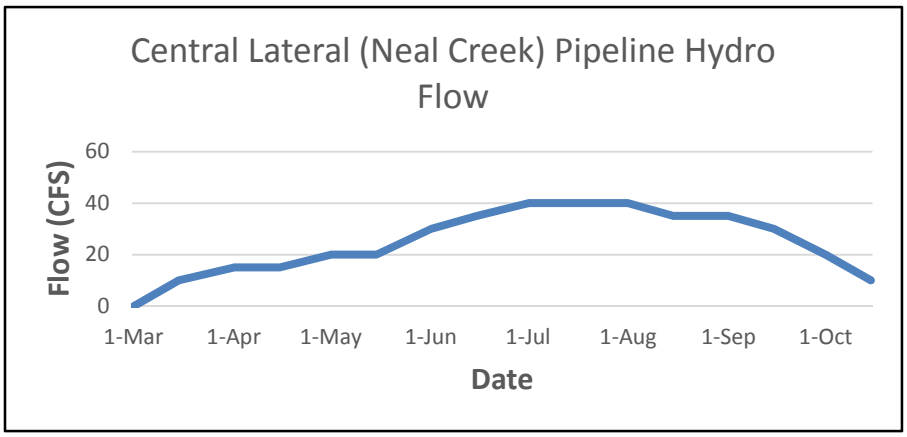

Figure 9-1: Central Lateral Pipeline Flow

Source: Hood River County Hydroelectric Study of 13 Sites, February 2008

The proposal for a new small scale hydroelectric plant at the Neal Creek site would include installing a new turbine onto the existing 30-inch pipeline. The District would propose to operate the hydro facility as a "secondary use". The primary use irrigation peak flows and seasonal diversion pattern would remain unchanged. The basic preliminary project parameters are listed below.

EFID Neal Creek Sherrard Drive Potential Hydroelectric Site	
Existing Penstock Diameter	30 inch (existing)
Penstock Length	3,000 linear feet
Static Hydraulic Head	435 feet
Peak Flow	40 cfs
Average Flow	25 cfs (during 8 month irrigation season)
Approximate Peak Power Production	1160 KW
Approximate Annual Power Production	4,620,000 KWH
Estimated Project Capital Cost	$3,418,800 (2010 dollars)
Estimated Project Indirect Cost	$688,100 (2010 dollars)
Estimated Annual Operating Cost	$50,000 (2010 dollars)
Estimated Annual Revenue	$257,783 (2010 dollars)
Payback Period (w/ no fund assistance)	20 years
Payback Period (W/ ETO/ODE fund assistance)	12 years
FERC License	Conduit Exemption
District Water Rights	Certificated

Figure 9-2: Central Lateral Pipeline Hydroelectric Parameters
Source: Hood River County Hydroelectric Study of 13 Sites, February 2008

Based on the results of the report, the study team did not find any immediate fatal flaws with the proposed site. There were several issues identified in the report that needed to be resolved before the feasibility of the project could be assured. These issues are described in Subsection "Potential Hydroelectric Feasibility Issues" below.

Dukes Valley Pipeline Odell Creek Site

In addition to the Central Lateral pipeline described above, there is another major lateral approximately 6 miles down the District's open canal system called the Dukes Valley Lateral. A seasonal peak flow of approximately 22 CFS enters a 24-inch high pressure steel pipeline and is conveyed to the Dukes Valley open canal system approximately 460 lower in elevation. The basic water flow in the pipeline throughout the irrigation season is shown in the graph below.

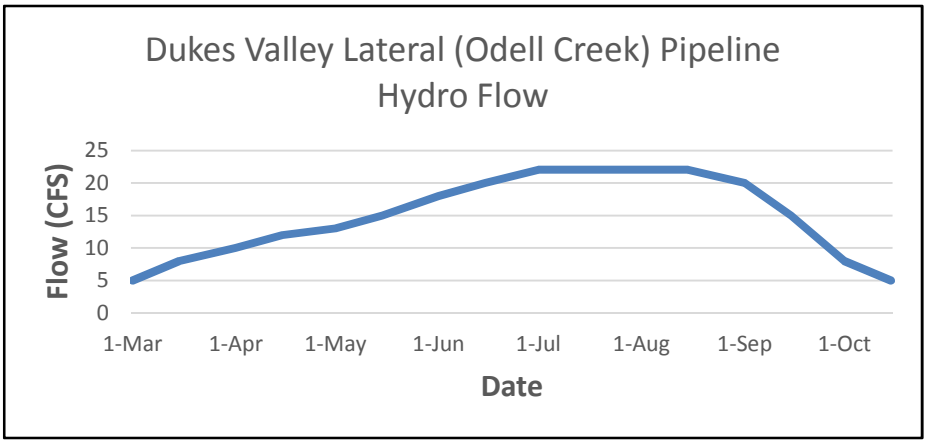

Figure 9-3: Dukes Valley Lateral Pipeline Flow
Source: Hood River County Hydroelectric Study of 13 Sites, February 2008

The proposal for a new small scale hydroelectric plant at the Dukes Valley site would include installing a new turbine onto the existing 24-inch pipeline at the discharge to the canal. The District would propose to operate the hydro facility as a "secondary use". The primary use irrigation peak flows and seasonal diversion pattern would remain unchanged. The basic preliminary project parameters are listed below.

EFID Dukes Valley Potential Hydroelectric Site	
Existing Penstock Diameter	24 inch (existing)
Penstock Length	4,000 linear feet
Static Hydraulic Head	460 feet
Peak Flow	22 cfs
Average Flow	14 cfs (during 8 month irrigation season)
Approximate Peak Power Production	630 KW
Approximate Annual Power Production	2,489,000 KWH
Estimated Project Capital Cost	$1,866,900 (2010 dollars)
Estimated Project Indirect Cost	$667,100 (2010 dollars)
Estimated Annual Operating Cost	$50,000 (2010 dollars)
Estimated Annual Revenue	$138,909 (2010 dollars)
Payback Period (w/ no fund assistance)	40+ years
Payback Period (W/ ETO/ODE fund assistance)	17 years
FERC License	Conduit Exemption
District Water Rights	Certificated

Figure 9-4: Dukes Valley Lateral Pipeline Hydroelectric Parameters
Source: Hood River County Hydroelectric Study of 13 Sites, February 2008

Based on the results of the report, the study team did not find any immediate fatal flaws with the proposed site. There were several issue identified in the report that needed to be resolved before the feasibility of the project could be assured. These issues are described in Subsection "Potential Hydroelectric Feasibility Issues" below.

Main Canal Site

The Hood River Basin Water Conservation Assessment also conducted a preliminary evaluation of potential hydropower generation on the Main Canal. In particular, a site just upstream of the Distribution Center at the Tavern Chute on the west side of Highway 35 was considered. The basic water flow in the pipeline throughout the irrigation season is shown in the graph below.

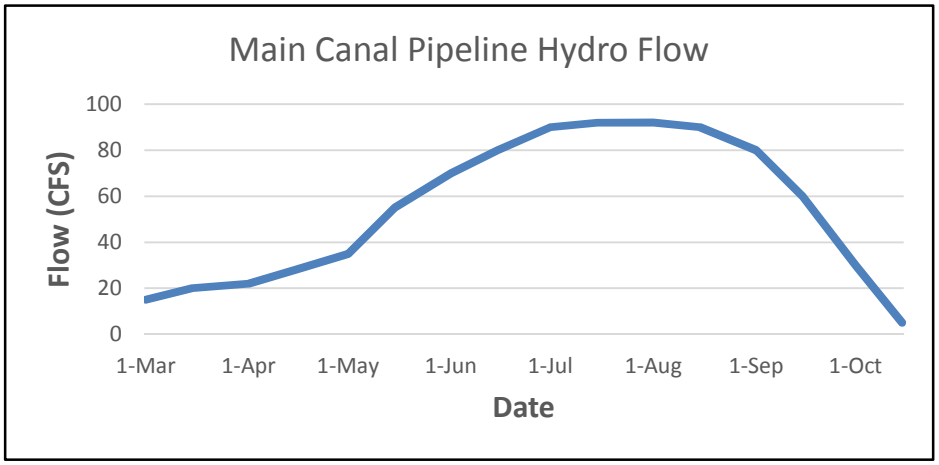

Figure 9-5: Main Canal Pipeline Hydro Flow

Based on an available head of 32 feet (if the main canal was piped, available static head would be closer to 100 feet), the basic project results are tabulated below.

EFID Neal Creek Sherrard Drive Potential Hydroelectric Site	
Existing Penstock Diameter	New penstock needed at Tavern Chute
Penstock Length	250 linear feet
Static Hydraulic Head	32 feet
Peak Flow	90 cfs
Average Flow	50 cfs (during 8 month irrigation season)
Approximate Peak Power Production	200 KW
Estimated Project Capital Cost	$650,000 (not including penstock)
Estimated Annual Operating Cost	$5,000
Estimated Annual Revenue	$37,834

Figure 9-6: Main Canal Pipeline Hydroelectric Parameters
Source: Hood River Basin Conservation Assessment, 2014

Based on the results of the report, the study team did not find any immediate fatal flaws with the proposed site. There were several issue identified in the report that needed to be resolved before the feasibility of the project could be assured. These issues are described in the next subsection.

Potential Hydroelectric Feasibility Issues

The existing Coanda fish screens at the District's main intake have not been officially approved by NOAA Fisheries. Based on preliminary discussions with Larry Swenson at NMFS, EFID will at least need to demonstrate that the Coanda screen is suitable. This may be able to be demonstrated by the previously conducted tests of the screen after it was installed, however additional tests could be required by NMFS. The District may also be required to improve the existing fish screen bypass system and/or to evaluate fish delay in the raw water canal and sandtrap upstream of the screens.

The proposed sites examined for hydro power production were selected based on hydraulic factors. In all cases, these sites are not located on property currently owned by the District. Reasonable land costs have been included as part of the initial capital costs for the hydroelectric facility, but it is assumed that the District will be able to acquire the land or obtain easements for these projects.

In order for pressure reducing bypass valving to be feasible for a proposed hydroelectric facility, EFID may need to construct facilities to further reduce silt and sediment levels in the water. A proposed silt settling facility is already under consideration by the District and would have other benefits besides the hydro issues. Therefore, the cost for land acquisition and construction of the facility was not considered as part of the hydroelectric project development costs. The facility is considered necessary, however, to allow the hydro project to proceed.

In the case of the Dukes Valley site, it is assumed that the 24-inch welded steel pipe is in suitable condition for penstock pressure application. No capital cost was included in the hydroelectric feasibility analysis for replacement of the pipeline. If needed, the additional could significantly affect the payback period. A pipeline wall thickness testing inspection would be needed.

The development of hydroelectric facilities in these pipelines could affect how the District currently handles return spill flows back to Neal Creek and Odell Creek. The ability to return spill flows may be in conflict with other water conservation goals currently being pursued by the District. This issue would need to be investigated further in consultation with reviewing agencies.

Permitting and Environmental Analyses

Based on the conclusions presented in the Hood River County Hydroelectric Study, the permitting and natural resource consultation requirements are summarized below.

A. The District will have to apply for secondary hydroelectric water rights per HB 2785 Expedited Hydroelectric process.

B. A FERC Conduit Exemption application (in the case of the Central Lateral and Dukes Valley sites) with the appropriate natural resource consultation requirements will need to be prepared.

C. Consultation would be needed to determine Agency acceptance of minor spill water to Neal Creek and Odell Creek. Mitigation improvements may be needed to improve turbidity.

D. Consultation will be needed to determine if NMFS and/or ODFW would require improvements or testing for the existing Coanda screen and sandtrap facility. A biological delay test procedure will likely be required on the existing entrance works including the headworks, acceptance canal, sand trap, fish screen and bypass return channel.

E. An evaluation of previous full scale biological testing data collected in 1997 for the Coanda fish screen would be needed.

F. A threatened and endangered wildlife survey and plant survey will likely be required.

G. A wetland delineation and in-water work permit (Corps of Engineers Section 404 Permit and DSL Removal/Fill Permit) will be required if wetlands are identified or a stream crossing is envisioned.

H. Consultation with SHPO and appropriate Native American tribes as well as an archeology survey would likely be required in areas where ground disturbance occurs.

Section 10 – Water Conservation

Canal Infiltration and Evaporation

Infiltration can be a significant contributor to water losses in open canal systems. In order to develop preliminary estimates of reasonable infiltration losses in the EFID system, the general geometry of each of the primary open canal systems was developed. This geometry is tabulated in Figure 10-1 below.

Canal	Length	Nominal Canal Infiltration Width	Total SF
Main	6.28 miles	16’	530,534
Dukes Valley	3.78 miles	12’	239,500
East Side	5.90 miles	14’	436,128
Totals	**15.96 miles**		**1,206,162**

Figure 10-1: Canal Infiltration Area Geometry

Examination of the Soil Survey of Hood River County, published by the Soil Conservation Service (now the Natural Resource Conservation Service, NRCS) in 1981 identified that the general soil profiles in the areas of the valley occupied by the canals are silty loams. Specific soils types are listed below:

A. Bins Bindle Series
B. Culbertson Series
C. Bald Series
D. Oak Grove Series

The soil survey lists generic permeability rates of 0.2 to 0.6 in/hour for all of these silty loam soil profiles. A more recent publication of Soil Quality Indicators by NRCS lists a range of steady infiltration rates for loams ranging from 0.2 to 0.4 in/hour. It also lists infiltration rates for clays at 0.04-0.20 in/hr. From construction experience, it is known that there can be significant clay content in the general loam profiles of the Hood River Valley. For this reason, a conservative value of 0.3 in/hour for loam infiltration was selected for these preliminary estimates.

$$\text{Infiltration Rate (i)} = \frac{(0.3\ \text{in/hr})}{(3{,}600\ \text{sec/hr}) \times (12\ \text{in/ft})} = 0.0000069\ \text{ft/sec}$$

Calculated infiltration rates appear in Figure 10-2 below. Please note that these estimates are very preliminary and are based on published general infiltration rates. No geotechnical field work has been performed and soil infiltration rates can vary widely by orders of magnitude and can drastically affect the conclusions. Furthermore, this analysis does not take into account localized irregularities in the canal soil profile. If a canal traverses a section of sandy or rocky soil, a much higher amount of water can be lost to infiltration in a short distance. Conversely, if clay content is higher than expected in these typical loam profiles, infiltration rates could be significantly less. For development of more reliable estimates, geotechnical field work and testing should be completed to verify these results.

Canal	Canal (sf)	Infiltration Rate (ft/sec)	Total Infiltration Flows
Main	530,534	0.0000069	3.66 cfs
Dukes Valley	239,500	0.0000069	1.65 cfs
Eastside	436,128	0.0000069	3.01 cfs
Totals	**1,206,162**		**8.32 cfs**

Figure 10-2: Canal Infiltration

Evaporation

Evaporation of the primary open canal systems was also preliminarily estimated to determine potential impact to water losses. Again, the surface area of the canal segments was estimated based on an average of discrete field measurements at various sections in the canals. The surface area geometry is tabulated in Figure 10-3 below.

Canal	Length	Evaporation Width	Total SF
Main	6.28 miles	10’	331,584
Dukes Valley	3.78 miles	7’	139,708
East Side	5.90 miles	8’	249,216
Totals	**15.96 miles**		**720,508**

Figure 10-3: Canal Evaporation Area Geometry

Evapotranspiration rates for the Hood River Valley were obtained from the US Department of Interior Bureau of Reclamation Pacific Northwest Region for the Hood River AgriMet Station. The evaporation values are in inches and represent monthly averages over a period from 1987 to 2010.

Station	Jan	Feb	Mar	Apr	May	Jun	July	Aug	Sep	Oct	Nov	Dec	Total
Hood River	0.44	0.94	2.19	3.69	5.81	7.23	8.58	7.17	4.57	2.07	0.63	0.37	43.68

Figure 10-4: Bureau of Reclamation Evaporation Rates for Hood River

Using these average values, the total evaporation over the approximate seven month water diversion season (March through September) is 39.24 inches or an average of 5.6 in/month. This corresponds to a calculated evaporation rate as shown below. Calculated evaporation canal losses appear in Figure 10-5 below.

$$\text{Evaporation Rate (e)} = \frac{(5.6\ \text{in/mo})}{(720\ \text{hrs/mo}) \times 3600\ \text{sec/hr}) \times (12\ \text{in/ft})} = 0.00000018\ \text{ft/sec}$$

Canal	Canal (sf)	Evaporation Rate (ft/sec)	Total Evaporation Flows
Main	331,584	0.00000018	0.06 cfs
Dukes Valley	139,708	0.00000018	0.03 cfs
East Side	249,216	0.00000018	0.04 cfs
Totals	**1,037,626**		**0.13 cfs**

Figure 10-5: Canal Evaporation

Significant Overflows

As listed in Section 4 of this report, the District currently has approximately 60 overflow throughout the irrigation distribution system. The majority of these overflows are configured as weirs. In an open canal system, operational overflows are necessary to balance the flow in the canals with the actual water used by the irrigators. As fluctuations in demand occur, the overflows act as spills directing unused water back to the river. The District makes every effort to match the flow in their canals with patron demand, but it is impossible to match it exactly and at any given time, some portion of water is spilled back to the river.

The actual flow from these locations fluctuates widely depending on seasonal timing and weather. Quantifying the flows at these overflow points is highly variable and, to date, there has not been any direct measurement of how much flow is unused. As part of this System Improvement Plan, a preliminary assessment was made of the overflow quantities. Of the 60 overflows, approximately a dozen represent the majority of the flow. These were categorized as "significant overflows" and were evaluated in the field over a period of several months. The basic configuration of these significant overflows is tabulated below.

A. MHID West Screened Box
Overflow No: 1
Lateral: Main Canal
Configuration: 8" pipe submerged 4'.
Operated typically approximately 25% open.

Figure 10-6: MHID Overflow

B. MHID East Screened Box
Overflow No: 2
Lateral: Main Canal
Configuration: 8" pipe submerged 4'.
Operated typically approximately 25% open.

C. Neal Creek Lateral Overflow
Overflow No: 5
Lateral: Main Canal
Internal weir length: 4’-3”
External weir length: 8’-2”
Operated typically with 3” water overflow depth.
(Note: some of this flow is intentional for water users on Neal Creek Road. This demand will be eliminated with the completion of the Christopher Ditch pipeline project.)

Figure 10-7: Neal Overflow External Weir

D. Kennedy Box Overflow
Overflow No: 12
Lateral: Central Lateral
Overflow weir length: 30”
Operated typically with 1½” water overflow depth.

Figure 10-8: Kennedy Overflow External Weir

E. Wilson Box
Overflow No: 19
Lateral: Central Lateral
Overflow weir length: 8’-0”
Operated typically with 1½” water overflow depth.

Figure 10-9: Wilson Box Overflow

F. Dethman Ridge (DeGroot) Overflow
Overflow No: 19
Lateral: Central Lateral
Overflow weir length: 8’-0”
Operated typically with 1½” water overflow depth.

Figure 10-10: Dethman Ridge (DeGroot) Overflow Weir

G. Marsh Chamberlin Overflow
Overflow No: 29
Lateral: Dukes Valley
Overflow weir length: 26”
Operated typically with 3” water overflow depth.

Figure 10-11: Marsh-Chamberlin Overflow Weir

H. Chamberlin Line Overflow
Overflow No: 34
Lateral: Dukes Valley
Overflow weir length: 17½ ”
Operated typically with 3” water overflow depth.

Figure 10-12: Chamberlin Overflow

I. Highline Ditch Overflow
Overflow No: 42
Lateral: Dukes Valley
Overflow weir length: 36”
Rock weir, flow variable
Operated typically with 1”-2” overflow depth.

Figure 10-13: Highline Overflow

J. Loop Line (Lage) Overflow
Overflow No: 46
Lateral: Eastside Lateral
Overflow weir length: 7’-0”
Operated typically with 2” overflow depth.

Figure 10-14: Loop Line (Lage) Overflow

K. Thomsen Line Overflow
Overflow No: 52
Lateral: Eastside Lateral
Overflow weir length: 30”
Operated typically with 1½ overflow depth.

Figure 10-15: Thomsen Line Overflow

L. Whiskey Creek Water Box Overflow
Overflow No: 53
Lateral: Eastside Lateral
Overflow weir length: 6’-9”
Operated typically with 1½ overflow depth
(Note: inclined screen configuration with high water velocity. Field measurement approximately 4 fps.)

Figure 10-16: Whiskey Creek Overflow

Figure 10-17 below summarizes the field results and documents an “average flow” for these significant overflow sites.

SIGNIFICANT OVERFLOW SUMMARY						
No.	Overflow Site	Weir (4/27/15)	Flow (4/27/15)	Weir ( )	Weir ( )	Average Flow
1	MHID West Box	n/a	0.50			
2	MHID East Box	n/a	0.50			
5A	Neal Creek-Internal	3”	1.91			
5B	Neal Creek-External	3”	3.67			
12	Kennedy Box	1½”	0.42			
13	Wilson Box	2”	0.29			
19	Dethman Ridge	1½”	1.52			
29	Marsh-Chamberlin	3”	0.98			
34	Chamberlin Line	3½”	0.80			
42	Highline Ditch	1”	0.35			
46	Loop Line – Lage	2”	1.75			
52	Thomsen Line	1½”	0.45			

SIGNIFICANT OVERFLOW SUMMARY						
No.	Overflow Site	Weir (4/27/15)	Flow (4/27/15)	Weir ( )	Weir ( )	Average Flow
53	Whiskey Creek	1½"	3.38			
			16.52			

Figure 10-17: Significant Overflow Summary

Minor Overflows

In addition to the significant overflows summarized above, there are approximately 46 additional smaller overflows that operate in the District on small sub-laterals. The District is currently actively piping these sub-laterals every year. As these systems are converted to pipelines, these small overflows are gradually eliminated. Field work was not performed to quantify overflow amounts from this group of small overflows. For the purposes of summarizing total water usage (and opportunities for water conservation), an allowance 25% of the total significant overflow quantity was assigned to these minor overflows based on estimates from the District.

Infiltration & Overflow Field Measurements (FCA)

This section currently being developed by FCA.

Water Conservation Summary

Based on the calculations and field work described above, Figure 10-18 below summarizes the total water "system losses" for the existing East Fork Irrigation District canal system.

WATER CONSERVATION SUMMARY					
System Lateral	Calculated Infiltration	Calculated Evaporation	Significant Overflows	Minor Overflow	Subtotals
Main Canal	3.66	0.06	6.33	1.58	11.63
Dukes Valley Canal	1.65	0.03	2.13	0.53	4.34
Central Lateral	0.00	0.00	2.23	0.56	2.79
Eastside Lateral	3.01	0.04	5.58	1.40	10.03
Subtotals	**8.32**	**0.13**	**16.27**	**4.07**	**28.79**

Figure 10-18: Water Conservation SummaryOverflow Summary

References

A. *Hood River Basin Water Conservation Assessment*, August, 2013. Prepared by Watershed Professionals Network LLC.

B. *Hood River Basin Surface Water Storage Feasibility Assessment*, June, 2014. Prepared by Watershed Professionals Network LLC for Oregon Water Resource Department & Hood River County Water Planning Group.

C. *EFID Diversion Headworks Preliminary Engineering Study*, March 2009. Prepared by Winzler & Kelly Consulting Engineers.

D. Hood River County Hydroelectric Study of 13 Proposed Generation Sites, February 2008. Prepared by Winzler & Kelly Consulting Engineers.

E. Water Management & Conservation Plan, March 2011. Prepared by East Fork Irrigation District.

F. Soil Survey Hood River County Area, USDA Soil Conservation Service, 1981.

Appendix 1

District Water Rights

STATE OF OREGON

COUNTY OF HOOD RIVER

CERTIFICATE OF WATER RIGHT

THIS CERTIFICATE ISSUED TO

EAST FORK IRRIGATION DISTRICT
P.O. BOX 162
ODELL, OREGON 97044

This certificate confirms the right to use the waters of EAST FORK HOOD RIVER, a tributary of the HOOD RIVER, for IRRIGATION of 8,526.52 acres.

This right was confirmed by decree of the Circuit Court of the State of Oregon for Hood River County. The decree is of record at Salem, in the Order Record of the Water Resources Director, in Volume 17, at page 333. The date of priority is November 25, 1895.

The amount of water to which this right is entitled is limited to an amount actually beneficially used and shall not exceed 106.55 cubic feet per second (cfs) or the equivalent in case of rotation, measured at the point of diversion from the source.

This certificate does not include rights inchoate under Transfer Applications T-9129, T-9609 and T-9804 as described in Tables 1, 2 and 3. The inchoate rights allow for the use of not more than 0.25 cfs for irrigation of 20.25 acres

The point of diversion is located as follows:

TWP	RNG	MER	SEC	¼ ¼	LOT	LOCATION
1 S	10 E	WM	4	NW SW	1	3750 feet South and 430 feet East from the NW corner of Section 4

A description of the place of use to which this right is appurtenant is as follows:

NOTICE OF RIGHT TO PETITION FOR RECONSIDERATION OR JUDICIAL REVIEW
This is an order other than a contested case. This order is subject to judicial review under ORS 183.484. Any petition for judicial review of the order must be filed within the 60 day time period specified by ORS 183.484(2).

IRRIGATION										
TWP		RNG		MER	SEC	¼ ¼		LOT	DLC	ACRES
2	N	10	E	WM	14	NW	SW			0.80
2	N	10	E	WM	14	SW	SW			10.20
2	N	10	E	WM	14	SE	SW			30.80
2	N	10	E	WM	14	NE	SE			31.60
2	N	10	E	WM	14	NW	SE			35.50
2	N	10	E	WM	14	SW	SE			36.50
2	N	10	E	WM	14	SE	SE			38.00
2	N	10	E	WM	15	NE	SE			0.40
2	N	10	E	WM	15	SW	SE			10.60
2	N	10	E	WM	15	SE	SE			33.20
2	N	10	E	WM	16	SW	SE			4.00
2	N	10	E	WM	16	SE	SE			0.60
2	N	10	E	WM	20	NE	SE			12.20
2	N	10	E	WM	20	SW	SE			13.20
2	N	10	E	WM	20	SE	SE			25.80
2	N	10	E	WM	21	NE	NE			15.60
2	N	10	E	WM	21	NW	NE			20.60
2	N	10	E	WM	21	SW	NE			39.50
2	N	10	E	WM	21	SE	NE			38.00
2	N	10	E	WM	21	NE	NW			3.40
2	N	10	E	WM	21	SW	NW			12.80
2	N	10	E	WM	21	SE	NW			22.40
2	N	10	E	WM	21	NE	SW			18.50
2	N	10	E	WM	21	NW	SW			37.40
2	N	10	E	WM	21	SW	SW			12.40
2	N	10	E	WM	21	SE	SW			22.50
2	N	10	E	WM	21	NE	SE			39.80
2	N	10	E	WM	21	NW	SE			38.50
2	N	10	E	WM	21	SW	SE			34.00
2	N	10	E	WM	21	SE	SE			39.00
2	N	10	E	WM	22	NE	NE			26.00
2	N	10	E	WM	22	NW	NE			38.80
2	N	10	E	WM	22	SW	NE			36.40
2	N	10	E	WM	22	SE	NE			29.80
2	N	10	E	WM	22	NE	NW			33.20
2	N	10	E	WM	22	NW	NW			30.20
2	N	10	E	WM	22	SW	NW			39.80
2	N	10	E	WM	22	SE	NW			38.00
2	N	10	E	WM	22	NE	SW			36.60
2	N	10	E	WM	22	NW	SW			39.40
2	N	10	E	WM	22	SW	SW			38.40
2	N	10	E	WM	22	SE	SW			38.00
2	N	10	E	WM	22	NE	SE			38.20
2	N	10	E	WM	22	NW	SE			33.80
2	N	10	E	WM	22	SW	SE			38.40
2	N	10	E	WM	22	SE	SE			38.80
2	N	10	E	WM	23	NE	NE			41.40
2	N	10	E	WM	23	NW	NE			41.20

IRRIGATION										
TWP		RNG		MER	SEC	¼ ¼		LOT	DLC	ACRES
2	N	10	E	WM	26	NW	NW			26.98
2	N	10	E	WM	26	SW	NW			6.71
2	N	10	E	WM	26	SE	NW			24.28
2	N	10	E	WM	26	SW	SW			12.80
2	N	10	E	WM	26	SE	SW			36.60
2	N	10	E	WM	26	NE	SE			13.70
2	N	10	E	WM	26	SW	SE			31.80
2	N	10	E	WM	26	SE	SE			24.60
2	N	10	E	WM	27	NE	NE			10.60
2	N	10	E	WM	27	NW	NE			21.50
2	N	10	E	WM	27	SW	NE			6.00
2	N	10	E	WM	27	SE	NE			5.00
2	N	10	E	WM	27	NE	NW			8.00
2	N	10	E	WM	27	NW	NW			24.60
2	N	10	E	WM	27	SW	NW			26.40
2	N	10	E	WM	27	SE	NW			14.40
2	N	10	E	WM	27	NE	SW			11.80
2	N	10	E	WM	27	NW	SW			22.00
2	N	10	E	WM	27	SW	SW			7.60
2	N	10	E	WM	27	SE	SW			16.60
2	N	10	E	WM	27	NE	SE			33.10
2	N	10	E	WM	27	NW	SE			38.70
2	N	10	E	WM	27	SW	SE			30.80
2	N	10	E	WM	27	SE	SE			30.00
2	N	10	E	WM	28	NE	NE			31.50
2	N	10	E	WM	28	NW	NE			34.00
2	N	10	E	WM	28	SW	NE			29.40
2	N	10	E	WM	28	SE	NE			31.40
2	N	10	E	WM	28	NE	NW			6.40
2	N	10	E	WM	28	NE	SE			13.20
2	N	10	E	WM	28	NW	SE			24.00
2	N	10	E	WM	28	SW	SE			11.80
2	N	10	E	WM	28	SE	SE			11.20
2	N	10	E	WM	29	NE	NE			2.70
2	N	10	E	WM	29	NW	NE			28.60
2	N	10	E	WM	29	SW	NE			1.00
2	N	10	E	WM	29	NE	NW			6.80
2	N	10	E	WM	29	SE	NW			19.60
2	N	10	E	WM	29	NW	SW			7.80
2	N	10	E	WM	29	SW	SW			1.40
2	N	10	E	WM	30	NE	SE			6.80
2	N	10	E	WM	30	SE	SE			6.00
2	N	10	E	WM	33	NE	SE			0.10
2	N	10	E	WM	34	NE	NE			25.80
2	N	10	E	WM	34	NW	NE			37.40
2	N	10	E	WM	34	SE	NE			37.50
2	N	10	E	WM	34	SE	NE			32.90
2	N	10	E	WM	34	NE	NW			13.70

IRRIGATION										
TWP		RNG		MER	SEC	¼ ¼		LOT	DLC	ACRES
2	N	11	E	WM	6	NE	SW			22.80
2	N	11	E	WM	6	NW	SW			37.00
2	N	11	E	WM	6	SW	SW			32.00
2	N	11	E	WM	6	SE	SW			33.40
2	N	11	E	WM	6	NW	SE			1.00
2	N	11	E	WM	6	SW	SE			10.40
2	N	11	E	WM	7	NE	NE			9.20
2	N	11	E	WM	7	NW	NE			18.60
2	N	11	E	WM	7	SW	NE			36.90
2	N	11	E	WM	7	SE	NE			7.60
2	N	11	E	WM	7	NE	NW			36.40
2	N	11	E	WM	7	NW	NW			38.60
2	N	11	E	WM	7	SW	NW			39.80
2	N	11	E	WM	7	SE	NW			40.00
2	N	11	E	WM	7	NE	SW			39.80
2	N	11	E	WM	7	NW	SW			38.00
2	N	11	E	WM	7	SW	SW			38.40
2	N	11	E	WM	7	SE	SW			38.80
2	N	11	E	WM	7	NE	SE			5.40
2	N	11	E	WM	7	NW	SE			40.00
2	N	11	E	WM	7	SW	SE			39.00
2	N	11	E	WM	7	SE	SE			3.40
2	N	11	E	WM	18	NE	NE			24.60
2	N	11	E	WM	18	NW	NE			30.80
2	N	11	E	WM	18	SW	NE			26.60
2	N	11	E	WM	18	SE	NE			23.20
2	N	11	E	WM	18	NE	NW			38.20
2	N	11	E	WM	18	NW	NW			39.80
2	N	11	E	WM	18	SW	NW			35.80
2	N	11	E	WM	18	SE	NW			38.80
2	N	11	E	WM	18	NE	SW			38.40
2	N	11	E	WM	18	NW	SW			38.80
2	N	11	E	WM	18	SW	SW			35.00
2	N	11	E	WM	18	SE	SW			34.80
2	N	11	E	WM	18	NE	SE			27.00
2	N	11	E	WM	18	NW	SE			39.20
2	N	11	E	WM	18	SW	SE			37.40
2	N	11	E	WM	18	SE	SE			28.20
2	N	11	E	WM	19	NE	NE			3.40
2	N	11	E	WM	19	NW	NE			32.60
2	N	11	E	WM	19	SW	NE			33.40
2	N	11	E	WM	19	SE	NE			2.80
2	N	11	E	WM	19	NE	NW			25.40
2	N	11	E	WM	19	NW	NW			33.40
2	N	11	E	WM	19	SW	NW			33.00
2	N	11	E	WM	19	SE	NW			33.10
2	N	11	E	WM	19	NE	SW			21.60
2	N	11	E	WM	19	NW	SW			36.40

IRRIGATION										
TWP		RNG		MER	SEC	¼	¼	LOT	DLC	ACRES
1	N	10	E	WM	3	SW	SW			5.80
1	N	10	E	WM	3	NW	SE	10		8.60
1	N	10	E	WM	3	SE	SE	16		0.60
1	N	10	E	WM	10	NE	NE	1		1.40
1	N	10	E	WM	10	NW	NE	2		14.00
1	N	10	E	WM	10	SE	NE	8		7.82
1	N	10	E	WM	10	NE	NW	4		25.80
1	N	10	E	WM	10	NW	NW	4		3.90
1	N	10	E	WM	10	SW	NW	5		0.50
1	N	10	E	WM	10	SE	NW	6		0.10
1	N	10	E	WM	10	NE	SE	9		8.10
1	N	10	E	WM	10	SW	SE	15		0.90
1	N	10	E	WM	10	SE	SE	16		2.60
1	N	10	E	WM	11	SW	NE			28.40
1	N	10	E	WM	11	SE	NE			5.20
1	N	10	E	WM	11	SE	NW			6.40
1	N	10	E	WM	11	NE	SW			1.00
1	N	10	E	WM	11	SW	SW			3.00
1	N	10	E	WM	11	SE	SW			13.40
1	N	10	E	WM	11	NE	SE			6.40
1	N	10	E	WM	11	NW	SE			38.70
1	N	10	E	WM	15	NE	NE	1		28.80
1	N	10	E	WM	15	NW	NE	2		6.80
1	N	10	E	WM	15	SW	NE	7		15.60
1	N	10	E	WM	15	SE	NE	8		15.50
1	N	10	E	WM	15	SE	NW	6		6.60
1	N	10	E	WM	15	SE	SW	14		32.00
1	N	10	E	WM	15	NE	SE	9		3.70
1	N	10	E	WM	15	NW	SE	10		10.50
1	N	10	E	WM	15	SW	SE	15		27.20
1	N	10	E	WM	15	SE	SE	16		2.60
1	N	10	E	WM	22	NW	NE	2		26.20
1	N	10	E	WM	22	SW	NE	7		1.00
1	N	10	E	WM	22	NE	NW	3		24.20
1	N	10	E	WM	22	SE	NW	6		27.10
1	N	10	E	WM	22	NW	SE	10		19.20
1	N	10	E	WM	22	SW	SE	15		10.00
1	N	10	E	WM	27	NW	NE	2		16.60
1	N	11	E	WM	6	NW	NW	4		2.00
1	N	11	E	WM	6	SW	NW	5		1.10
									Total:	8526.52

This certificate confirms the Department's determination of satisfactory proof for completion of the changes authorized by orders of the Director approving Transfer Applications: 1) T-8107, recorded in Special Order Volume 53, Page 275; 2) T-8649, recorded in Special Order Volume 55, Page 103; and 3) T-8993, recorded in Special Order Volume 56, Page 192. This certificate also confirms the loss of right for 0.75 acres under T-8933 for which the authorized changes were not completed as described in Special Order Volume 64, Page 200.

TABLE 3: T-9804 INCHOATE RIGHTS										
TWP	RNG	MER	SEC	¼ ¼		LOT	DLC	TL	AC	USER
2 N	10 E	W.M.	26	SE	NW			2417	0.03	EDWARDS
2 N	10 E	W.M.	26	SE	NW			2418	0.05	RODRIGUEZ
2 N	10 E	W.M.	26	SE	NW			2419	0.04	HEDGES
2 N	10 E	W.M.	26	SE	NW			2420	0.05	RIVERA
2 N	10 E	W.M.	26	SE	NW			2421	0.02	MURO
2 N	10 E	W.M.	26	SE	NW			2422	0.05	JIMENEZ
2 N	10 E	W.M.	26	SE	NW				0.73	CEDAR DRIVE
2 N	10 E	W.M.	26	SE	NW				0.83	TAMARACK ROAD
2 N	10 E	W.M.	26	SE	NW				0.15	PONDEROSA ROAD
								Total:	5.95	

The issuance of this superseding certificate does not confirm the status of the water right in regard to the provisions of ORS 540.610 pertaining to forfeiture or abandonment.

The right to the use of the water for the above purposes is restricted to beneficial use on the lands or place of use described and is subject to all other conditions and limitations contained in the decree.

Issued: July 5, 2005

For Phillip C. Ward, Director
Oregon Water Resources Department

Recorded in State Record of Water Right Certificates numbered 81340.

STATE OF OREGON

COUNTY OF HOOD RIVER

CERTIFICATE OF WATER RIGHT

THIS CERTIFICATE ISSUED TO

EAST FORK IRRIGATION DISTRICT
P.O. BOX 162
ODELL, OREGON 97044

confirms the right to use the waters of the EAST FORK HOOD RIVER, a tributary of HOOD RIVER, for IRRIGATION OF 25.0 ACRES.

This right was perfected under Permit 32685. The date of priority is JUNE 14, 1967. The amount of water to which this right is entitled is limited to an amount actually beneficially used and shall not exceed 0.31 CUBIC FOOT PER SECOND, or its equivalent in case of rotation, measured at the point of diversion from the source.

The point of diversion is located as follows:

NW 1/4 SW 1/4, SECTION 4, TOWNSHIP 1 SOUTH, RANGE 10 EAST, W.M.; 3750 FEET SOUTH AND 430 FEET EAST FROM THE NW CORNER OF SECTION 4.

The amount of water used for irrigation, together with the amount secured under any other right existing for the same lands, is limited to ONE-EIGHTIETH of one cubic foot per second per acre, or its equivalent for each acre irrigated and shall be further limited to a diversion of not to exceed 3.0 acre-feet per acre for each acre irrigated during the irrigation season of each year.

In processing the application towards issuance of the permit, it appears that a clerical error was inadvertently made in limiting the duty of water to not exceed 1/80th of one cubic foot per second of water per acre and 4.0 acre-feet per acre. In the issuance of this certificate, the duty of water has been corrected to 1/80th cubic foot per second per acre and 3.0 acre-feet per acre of water, for each acre irrigated during the irrigation season of each year, in keeping with the customary policy and determination this office setting the proper maximum limits of the right.

This is a final order in other than contested case. This order is subject to judicial review under ORS 183.484. Any petition for judicial review of the order must be filed within the 60 days of the date of service.

43728.SB

Certificate Number 80926

The use shall conform to such reasonable rotation system as may be ordered by the proper state officer.

A description of the place of use to which this right is appurtenant is as follows:

Township	Range	Section	1/4,1/4	Tax Lot	Acres	Landowner
1 North	10 East	10 (D)	SE SE	1800	2.0	Nicholson, Lyle G Trust
1 North	10 East	10 (D)	SE SE	1900	0.5	Green, Katherine
1 North	10 East	10 (D)	SE SE	1902	0.5	Snyder, Richard & Ronda
1 North	10 East	10 (D)	SE SE	2001	1.2	Bullock, William L & Kathy A
1 North	10 East	10 (D)	SE SE	2100	1.0	Haun, J Franz & J Anne
1 North	10 East	10 (D)	SE SE	2200	0.4	Wiley, Donald B & Rose
2 North	10 East	1	SE SE	1800	1.8	Thomsen, V Robert & Elizabeth
2 North	10 East	13 (D)	NW SE	800	0.1	Mariscal, Santos A & Celia D
2 North	10 East	36	NE SW	2100	11.5	Yasui, R Thomas
2 North	10 East	36	NE SW	2200	1.8	Jacobsen, Carl A E & Jeanine
2 North	10 East	36	NW SW	2200	3.2	Jacobsen, Carl A E & Jeanine
2 North	10 East	36	NW SW	2400	0.5	Jacobsen, Carl A E & Jeanine
2 North	10 East	36	SW SW	2600	0.5	Peters, Harrison & Charlotte

The right to the use of the water for the above purpose is restricted to beneficial use on the lands or place of use described. The use confirmed herein may be made only at times when sufficient water is available to satisfy all prior rights, including rights for maintaining instream flows.

Issued August 25, 2004.

Dwight Stroh for

Phillip C. Ward, Acting Director
Water Resources Department

Recorded in State Record of Water Right Certificates Number 80926.

43728.SB

STATE OF OREGON

COUNTY OF HOOD RIVER

CERTIFICATE OF WATER RIGHT

THIS CERTIFICATE ISSUED TO

EAST FORK IRRIGATION DISTRICT
P. O. BOX 162
ODELL, OREGON 97044

confirms the right to use the waters of the EAST FORK HOOD RIVER, a tributary of HOOD RIVER, for IRRIGATION OF 57.0 ACRES.

This right was perfected under Permit 32101. The date of priority is OCTOBER 26, 1966. The amount of water to which this right is entitled is limited to an amount actually beneficially used and shall not exceed 0.71 CUBIC FOOT PER SECOND, or its equivalent in case of rotation, measured at the point of diversion from the source.

The point of diversion is located as follows:

NW 1/4 SW 1/4, SECTION 4, TOWNSHIP 1 SOUTH, RANGE 10 EAST, W.M.; 3750 FEET SOUTH AND 430 FEET EAST FROM THE NW CORNER OF SECTION 4.

The amount of water used for irrigation, together with the amount secured under any other right existing for the same lands, is limited to ONE-EIGHTIETH of one cubic foot per second per acre, or its equivalent for each acre irrigated and shall be further limited to a diversion of not to exceed 3.0 acre-feet per acre for each acre irrigated during the irrigation season of each year.

In processing the application towards issuance of the permit, it appears that a clerical error was inadvertently made in limiting the duty of water to not exceed 1/80th of one cubic foot per second of water per acre and 4.0 acre-feet per acre. In the issuance of this certificate, the duty of water has been corrected to 1/80th cubic foot per second per acre and 3.0 acre-feet per acre of water, for each acre irrigated during the irrigation season of each year. In keeping with the customary policy and determination this office setting the proper maximum limits of the right.

This is a final order in other than contested case. This order is subject to judicial review under ORS 183.484. Any petition for judicial review of the order must be filed within the 60 days of the date of service.

42968.SB

Certificate Number 80927

The use shall conform to such reasonable rotation system as may be ordered by the proper state officer.

A description of the place of use to which this right is appurtenant is as follows:

Township	Range	Section	1/4,1/4	Tax Lot	Acres	Landowner
1 North	10 East	1	NW SW	1300	1.2	Collins, Cynthia
1 North	10 East	1	SW SW	1600	2.1	Jette, Fredrick W & Mary J
1 North	10 East	1	SW SW	1700	2.8	Jette, Fredrick W & Mary J
1 North	10 East	2	SW NE	600	1.2	Endow, Aya
1 North	10 East	2	NE NW	1001	0.45	Peters, Harrison & Charlotte D
1 North	10 East	2	SE NW	1001	0.05	Peters, Harrison & Charlotte D
1 North	10 East	2	NW NW	1100	4.5	King Orchards
1 North	10 East	2	SW NW	1201	0.5	Smith, Irvine R & Sherril J
1 North	10 East	2	SW NW	1400	0.8	Kaplan, David Alan
1 North	10 East	2	SW NW	1401	1.0	Walker, Donald W. & Joan K
1 North	10 East	2	SE NW	1600	1.3	D & P Orchards, Inc
1 North	10 East	2	SE NW	1700	1.0	Wolfe, Stephen V & Carol J
1 North	10 East	2	SW SW	1804	1.6	Hanel, William W & Barbara M
1 North	10 East	3	NE SE	2600	0.8	Cathey, Richard & Anne
1 North	10 East	3	NE SE	2603	1.0	Walker, Christopher & Elaine M
1 North	10 East	3	NE SE	2701	1.5	Johnson, Vernon F. & Kristi D
1 North	10 East	3	SE SE	3100	3.0	Hanel, Kathleen M
1 North	10 East	3	SE SE	3200	1.8	Hanel, Kathleen M
1 North	10 East	14	NW NW	300	7.0	Zeman, Michael L. & Nilsa N
1 North	10 East	22	SW NE	500	0.5	Reed, Jess D & Brown, Sheila A
1 North	10 East	22	SW NE	501	1.0	Lewis, Jimmie A & Janet M
1 North	10 East	22	SW NE	502	1.0	Staley, Ralph & Sharon L
1 North	10 East	22	SW NE	504	1.0	Byrne, James & Marjorie
1 North	10 East	22	SW NE	505	0.25	Mears, Mark J & Jodie R

Township	Range	Section	1/4,1/4	Tax Lot	Acres	Landowner
1 North	10 East	22	SW NE	506	0.25	Mears, Mark J & Jodie R
1 North	10 East	22	SW NE	507	1.0	Wadman, Mark B & Rebecca L
2 North	10 East	12	SE NE	400	3.0	Paasch, David A & Tedi Rae
2 North	10 East	21	SW SW	4100	0.1	Delpha A King Estate
2 North	10 East	21	SW SW	4700	0.5	Sommerville, Janet A
2 North	10 East	21	SW SW	4900	0.1	Arnold, Frank B & Gloria W
2 North	10 East	21	SW SE	5802	0.2	Sims, James E
2 North	10 East	21	NW SE	6101	0.2	Picking, Bradford G & Vicki L
2 North	10 East	27	NW NW	4400	0.9	Sheirbon, Joseph C
2 North	10 East	27	SW NW	4700	1.0	Sheirbon, Joseph C
2 North	10 East	27	NW SW	6100	1.0	Sheirbon, Joseph C
2 North	10 East	28	NW NE	2000	0.5	Sheirbon, Joseph C
2 North	10 East	28	NE SE	4000	1.8	Glacier Ranch, Inc
2 North	10 East	35	SW NE	500	3.2	Tamura Orchards, Inc
2 North	10 East	36(DC)	SW SE	700	0.6	Berquist, Lisa M
2 North	10 East	36(DC)	SW SE	800	0.3	Berquist, Lisa M
2 North	11 East	7	NE NW	1100	1.2	Laraway & Sons, Inc
2 North	11 East	7	NE NW	1200	1.8	Laraway & Sons, Inc
2 North	11 East	20	NW NW	1300	2.0	Guth, Ronald G & Margaret M

The right to the use of the water for the above purpose is restricted to beneficial use on the lands or place of use described. The use confirmed herein may be made only at times when sufficient water is available to satisfy all prior rights, including rights for maintaining instream flows.

Issued August 25, 2004.

Phillip C. Ward, Acting Director
Water Resources Department

Recorded in State Record of Water Right Certificates Number 80927.

42968.SB

STATE OF OREGON

COUNTY OF HOOD RIVER

CERTIFICATE OF WATER RIGHT

THIS CERTIFICATE ISSUED TO

EAST FORK IRRIGATION DISTRICT
P. O. BOX 162
ODELL, OREGON 97044

confirms the right to use the waters of the EAST FORK HOOD RIVER, a tributary of HOOD RIVER, for IRRIGATION OF 89.0 ACRES.

This right was perfected under Permit 30825. The date of priority is AUGUST 13, 1965. The amount of water to which this right is entitled is limited to an amount actually beneficially used and shall not exceed 1.1 CUBIC FEET PER SECOND, or its equivalent in case of rotation, measured at the point of diversion from the source.

The point of diversion is located as follows:

NW 1/4 SW 1/4, SECTION 4, TOWNSHIP 1 SOUTH, RANGE 10 EAST, W.M.; 3750 FEET SOUTH AND 430 FEET EAST FROM THE NW CORNER OF SECTION 4.

The amount of water used for irrigation, together with the amount secured under any other right existing for the same lands, is limited to ONE-EIGHTIETH of one cubic foot per second per acre, or its equivalent for each acre irrigated and shall be further limited to a diversion of not to exceed 3.0 acre-feet per acre for each acre irrigated during the irrigation season of each year.

In processing the application towards issuance of the permit, it appears that a clerical error was inadvertently made in limiting the duty of water to not exceed 1/80th of one cubic foot per second of water per acre and 4.0 acre-feet per acre. In the issuance of this certificate, the duty of water has been corrected to 1/80th cubic foot per second per acre and 3.0 acre-feet per acre of water, for each acre irrigated during the irrigation season of each year, in keeping with the customary policy and determination this office setting the proper maximum limits of the right.

This is a final order in other than contested case. This order is subject to judicial review under ORS 183.484. Any petition for judicial review of the order must be filed within the 60 days of the date of service.

41228.SB

Certificate Number 80928

The use shall conform to such reasonable rotation system as may be ordered by the proper state officer.

A description of the place of use to which this right is appurtenant is as follows:

Township	Range	Section	1/4,1/4	Tax Lot	Acres	Landowner
1 North	10 East	10	NE NE	100	2.9	Hanel Field LLC
1 North	10 East	10	NE NE	200	3.5	Hanel, William & Barbara
1 North	10 East	10	NE NE	201	0.6	Caldwell, B E & Gilona F
1 North	10 East	11	NW NW	301	1.0	Hanel, William & Barbara
1 North	10 East	11	NE SW	1300	11.0	Howard, Richard
1 North	10 East	11	NW SW	1301	4.0	Mt Hood Forest Products, LLC
1 North	10 East	11	NE SW	1304	2.0	Vieira, Lisa & Matthew
1 North	10 East	11	NE SW	1305	0.5	Vieira, Lisa & Matthew
1 North	10 East	11	NE SW	1307	7.0	Miller, Steven R & Rita
1 North	10 East	11(BD)	SE NW	100	1.3	Rausch, Gerd B
1 North	10 East	11(BD)	SE NW	400	1.0	Remer, Phillip L
1 North	10 East	11(BD)	SE NW	500	2.0	Gray, Randal & Wendy-Thompson
1 North	10 East	11(BD)	SE NW	800	1.5	Jacoby, Lawrence & Susan
1 North	10 East	11(BD)	SE NW	1000	0.35	Wells Fargo Home Mortgage, Inc
1 North	10 East	11(BD)	SE NW	1100	0.65	Garvin, Gary & Virginia
2 North	10 East	23	SW NW	1806	0.1	Stewart, Robert W. & Kimberly L
2 North	10 East	23	NW SW	1806	0.4	Stewart, Robert W. & Kimberly L
2 North	10 East	23	NW SW	2002	0.3	Chestnut, Donna Kay Williams
2 North	10 East	23	SW SW	2100	2.5	Udelius Orchards, Inc
2 North	10 East	23	SW SE	3500	0.3	Masiker, Clarence M. & Phyllis
2 North	10 East	23	SW SE	3600	0.3	Stone, Norman K & Jean M
2 North	10 East	24	SE NW	2500	2.0	Roy Webster Orchards
2 North	10 East	24	SE NW	2501	1.0	Hughes, Carl E
2 North	10 East	24	SW SE	3800	0.5	Kirby, Roy L & Wright, Mary Ann
2 North	10 East	24	SE SE	4403	4.85	Viewmont Orchards, LLC

Township	Range	Section	1/4,1/4	Tax Lot	Acres	Landowner
2 North	10 East	25 (C)	SW SW	1000	18.4	Hinman, Dale A
2 North	10 East	27 (D)	NE SE	203	0.2	Lewis, Dale J & Della R
2 North	10 East	34	NW NW	1500	1.0	Franks, Clarence F & Kathleen
2 North	10 East	34	SW NW	1500	1.9	Franks, Clarence F & Kathleen
2 North	10 East	34	SW SW	3200	0.8	Smith, Calvin L
2 North	10 East	35	SW NE	400	1.5	Yasui, Inc
2 North	10 East	35	NW NE	1000	1.5	D & P Orchards, Inc
2 North	10 East	35	NE NW	1400	0.9	Stohland, Marjorie Aileen
2 North	10 East	35	NE NW	1500	1.25	D & P Orchards, Inc
2 North	10 East	35	NE SW	2100	1.0	Yasui, Inc
2 North	10 East	35	NW SW	2500	1.3	Huang, Wen-Yang
2 North	10 East	35	SW SW	2600	1.1	Huang, Wen-Yang
2 North	10 East	35	SE SW	2900	2.0	Yasui, Inc
2 North	10 East	35	NW SE	3900	0.4	Walls, Timothy W & Carolyn A
2 North	10 East	35	NE SE	4200	1.2	Yasui, Inc
2 North	10 East	35	SE SE	4400	1.3	Packer, Wilma L
2 North	10 East	35	SE SE	4500	1.0	Packer, Wilma L
3 North	11 East	31	NW SW	2400	0.7	Nelson, William W

The right to the use of the water for the above purpose is restricted to beneficial use on the lands or place of use described. The use confirmed herein may be made only at times when sufficient water is available to satisfy all prior rights, including rights for maintaining instream flows.

Issued August 25, 2004.

Dwight Fred for

Phillip C. Ward, Acting Director
Water Resources Department

Recorded in State Record of Water Right Certificates Number 80928.

41228.SB

STATE OF OREGON

COUNTY OF HOOD RIVER

CERTIFICATE OF WATER RIGHT

THIS CERTIFICATE ISSUED TO

EAST FORK IRRIGATION DISTRICT
P.O. BOX 162
ODELL, OREGON 97044

confirms the right to use the waters of the EAST FORK HOOD RIVER, a tributary of HOOD RIVER, for IRRIGATION OF 478.8 ACRES.

This right was perfected under Permit 29617. The date of priority is MARCH 13, 1964. The amount of water to which this right is entitled is limited to an amount actually beneficially used and shall not exceed 5.99 CUBIC FEET PER SECOND, or its equivalent in case of rotation, measured at the point of diversion from the source.

The point of diversion is located as follows:

NW 1/4 SW 1/4, SECTION 4, TOWNSHIP 1 SOUTH, RANGE 10 EAST, W.M.; 3750 FEET SOUTH AND 430 FEET EAST FROM THE NW CORNER OF SECTION 4.

The amount of water used for irrigation, together with the amount secured under any other right existing for the same lands, is limited to ONE-EIGHTIETH of one cubic foot per second per acre, or its equivalent for each acre irrigated and shall be further limited to a diversion of not to exceed 3.0 acre-feet per acre for each acre irrigated during the irrigation season of each year.

In processing the application towards issuance of the permit, it appears that a clerical error was inadvertently made in limiting the duty of water to not exceed 1/80th of one cubic foot per second of water per acre and 4.0 acre-feet per acre. In the issuance of this certificate, the duty of water has been corrected to 1/80th cubic foot per second per acre and 3.0 acre-feet per acre of water for each acre irrigated during the irrigation season of each year, in keeping with the customary policy and determination this office setting the proper maximum limits of the right.

The use shall conform to such reasonable rotation system as may be ordered by the proper state officer.

This is a final order in other than contested case. This order is subject to judicial review under ORS 183.484. Any petition for judicial review of the order must be filed within the 60 days of the date of service.

39634.SB

Certificate Number 80929

A description of the place of use to which this right is appurtenant is as follows:

Township	Range	Section	1/4,1/4	Tax Lot	Acres	Landowner
1 North	10 East	1	SE NW	800	5.5	Mallon, James & Shirley
1 North	10 East	1	NE SW	1000	0.2	Mallon, James & Shirley
1 North	10 East	1	NW SE	2300	9.4	Peters, Anthony C & Harrison
1 North	10 East	1	SW SE	2300	2.8	Peters, Anthony C & Harrison
1 North	10 East	1	NW SE	2400	5.5	Nakamura, Brian & Mittan, Marla
1 North	10 East	1	SW SE	2400	1.0	Nakamura, Brian & Mittan, Marla
1 North	10 East	2	SE NW	1600	15.0	D & P Orchards, Inc
1 North	10 East	2	SE SW	1800	8.4	Pessl, H Michael
1 North	10 East	2	NW SW	1806	0.6	Wy'east Vineyards, Ltd
1 North	10 East	2	SW SW	1806	1.4	Wy'east Vineyards, Ltd
1 North	10 East	3	SW NE	500	3.6	Sheirbon, Joseph W Jr
1 North	10 East	3	SE NE	700	3.1	Burris, Betty Anita
1 North	10 East	3	NE SW	1700	12.1	Ortman, Thomas L & Kay E
1 North	10 East	3	NE SW	1800	5.9	Ortman, Thomas L & Kay E
1 North	10 East	3	NW SW	2100	2.2	Bryant, John C
1 North	10 East	3	SW SW	2100	1.3	Bryant, John C
1 North	10 East	3	SE NE	2602	1.2	Weseman, Charles E & Christine
1 North	10 East	3	NE SE	2602	3.8	Weseman, Charles E & Christine
1 North	10 East	10	NW SE	900	1.8	Dennis, Edwin J & Susan E
1 North	10 East	10	NW SE	901	0.8	Gosson, James & Gail
1 North	10 East	10	NW SE	902	0.3	Coerper, Walter & Jodi S
1 North	10 East	10	NW SE	903	3.2	Dennis, Edwin J & Susan E
1 North	10 East	10	SW SE	1000	2.0	Monaghan, Patrick
1 North	10 East	10	SW SE	1100	1.0	Stewart, Robert W & Kimberly L
1 North	10 East	11	SE SW	1600	1.0	Smith, Donald L & Mary A
1 North	10 East	11	SW SE	1603	0.3	Smith, Donald L & Mary A

1 North	10 East	11	SW SE	1700	1.1	Sharkey, Lynn & Carolyn L
1 North	10 East	11	SE SE	1700	0.7	Sharkey, Lynn & Carolyn L
1 North	10 East	11	SW SE	1702	0.9	Bales, Donald L
1 North	10 East	11	SW SE	1703	1.0	Keller, Jack R & Mary
1 North	10 East	11	SW SE	1705	0.5	Smith, Terry & Jennifer
1 North	10 East	11	SW SE	1707	9.5	Smith, Terry & Jennifer
1 North	10 East	11	SE SE	1707	0.5	Smith, Terry & Jennifer
1 North	10 East	15	SW SW	1300	3.0	Parton, Dexter & Lois
1 North	10 East	15	SW SW	1400	0.45	Hall, Charles W & Margaret
1 North	10 East	15	SW SW	1401	1.75	Jenkins, David B & Sharon E
1 North	10 East	15	SW SW	1402	3.2	Stoltz, John R & Charlene M
1 North	10 East	15	SW SW	1403	4.0	Jenkins, David B & Sharon E
1 North	10 East	15	SW SW	1404	0.45	Jenkins, David B & Sharon E
1 North	10 East	15	SW SW	1405	1.2	Stoltz, John R & Charlene M
1 North	10 East	15	SW SW	1406	7.1	Stoltz, John R & Charlene M
1 North	10 East	15	SE NE	2200	1.3	Jeppesen, J H
1 North	10 East	22	SW NE	401	0.4	Smith, Darren & Renae
1 North	10 East	22	SW NE	402	0.3	Olsen, Robert A & Mary M
1 North	10 East	22	SW NE	403	0.4	Fey, Michael
1 North	10 East	22	SW NE	405	0.4	Canyl, Paul L & Diana
1 North	10 East	22	SW NE	406	0.5	Abel, Kurt
1 North	10 East	22	SW NE	407	0.2	McCormick, John E & Nancy R
1 North	10 East	22	SW NE	408	0.2	McMahan, Hugh B & Linda B
1 North	10 East	22	SW NE	409	0.5	Church, John B & Donna Renee
1 North	10 East	22	SW SE	5200	1.2	Lowe, John E & Deltha J
1 North	10 East	22	NW NW	900	0.75	Atteburry, Stephen & Mary Ann
1 North	10 East	22	NW NW	1000	0.1	Valley Worship Center
1 North	10 East	22	NW NW	1101	0.5	Stoltz, John R & Charlene M
1 North	10 East	22	NW NW	800	0.3	Garrett, Catherine W
1 North	10 East	34	SW SW	600	3.1	Dominquez, Luis B

2 North	10 East	12	SW NE	400	4.0	Paasch, David A. & Tedi Rae
2 North	10 East	14	SW NE	300	1.4	Shadowfax Orchards, Inc
2 North	10 East	14	SE NE	300	1.1	Shadowfax Orchards, Inc
2 North	10 East	14	SW NE	400	12.8	Roy Webster Orchards
2 North	10 East	14	NW SE	400	0.8	Roy Webster Orchards
2 North	10 East	14	SE NW	1400	1.5	Roy Webster Orchards
2 North	10 East	14	SE NW	1900	4.5	Roy Webster Orchards
2 North	10 East	14	NE SW	1900	1.0	Roy Webster Orchards
2 North	10 East	14	SW SW	2600	1.5	Sheppard Orchards, Inc
2 North	10 East	22	NE NW	1500	0.4	R & N Kirby Orchards, Inc
2 North	10 East	22	NW NW	1200	1.2	R & N Kirby Orchards, Inc
2 North	10 East	22	NW NW	1300	1.9	R & N Kirby Orchards, Inc
2 North	10 East	22	NE NW	1000	3.9	Graves, Robert R & Kimberly J
2 North	10 East	24	SW SE	3700	10.0	Moore Orchards, Inc
2 North	10 East	25	NE NE	100	11.2	Moore Orchards, Inc
2 North	10 East	25	NW NE	100	0.8	Moore Orchards, Inc
2 North	10 East	25	SE SW	1100	2.6	Hinman, Dale A
2 North	10 East	25	SE SW	1200	0.5	Andresen, Sylvia M
2 North	10 East	25	SE SW	1300	2.9	Hinman, Dale A
2 North	10 East	25	SE SW	1400	5.6	Hinman, Dale A
2 North	10 East	26	NW NE	300	11.5	John DeGroot, Trustee
2 North	10 East	26	NW NE	400	10.6	Cochran, Brian L
2 North	10 East	26	NW NE	401	0.4	Udelius, Michael & Elaine
2 North	10 East	26	NW NE	700	5.5	John DeGroot, Trustee
2 North	10 East	26	NW NW	900	1.1	Vance, Lois
2 North	10 East	26	NE SE	1200	0.6	C M & W O Sheppard, Inc
2 North	10 East	27	NW SW	6600	6.8	Glacier Ranch, Inc
2 North	10 East	27	NW SW	6700	3.0	Sheirbon, Gerald L
2 North	10 East	27	SE SW	7100	1.5	Goe, Donald L & Helen M

2 North	10 East	27	NE SE	1300	0.3	Jimenez, Jesus & Eufrosina
2 North	10 East	27	NE SE	1408	0.05	Layson, John & Carolyn
2 North	10 East	27	NE SE	1409	0.1	Layson, John & Carolyn
2 North	10 East	27	SE SE	2100	0.3	Kennedy, Anna Pauline
2 North	10 East	27	SE SE	2102	0.7	Kennedy, Anna Pauline
2 North	10 East	33	NE SE	1000	25.8	Bohince, Sean & Julie
2 North	10 East	33	NW SE	1000	1.0	Bohince, Sean & Julie
2 North	10 East	34	NW NW	1502	14.7	Swihart, Matthew S & Mary H
2 North	10 East	35	SE NE	200	11.0	Yasui, Inc
2 North	10 East	35	NW NE	600	1.0	Davis P F, Davis, J A & P
2 North	10 East	35	NW NW	1600	1.0	D & P Orchards, Inc
2 North	10 East	35	NW NW	1700	0.8	Davis P F, Davis, J A & P
2 North	10 East	35	SE NW	1907	0.8	Hanel, Robert L
2 North	10 East	35	SW SE	3100	0.2	Lo, Alex
2 North	10 East	36	NW NW	1600	4.5	Hinman Orchards, Inc
2 North	10 East	36	SW NW	1700	10.0	Powell, Lillian G Trust
2 North	10 East	36	SW NW	701	0.8	Powell, Lillian G Trust
2 North	10 East	36	NE SE	100	1.0	Swyers, Alice T
2 North	10 East	36	NE SE	300	2.3	Moilanen-Craig, Dorothy L
2 North	10 East	36	NE SE	400	0.6	Wacker, Gerald D & Geraldine
2 North	10 East	36	NE SE	600	0.2	Rhodes, David M & Diane V
2 North	10 East	36	NE SE	800	1.0	Huff, Robert D
2 North	10 East	36	NE SE	900	1.0	Wacker, Gerald D & Geraldine
2 North	10 East	36	NE SE	1200	1.0	Winer, Michael D
2 North	10 East	36	NE SE	1300	2.0	Guess, Dean E & DesRochers, D
2 North	10 East	36	NW SE	300	1.5	Tracy, Mitchell & Going, C
2 North	10 East	36	NW SE	1400	1.0	Wells, John T
2 North	11 East	6	SW NE	301	1.0	Ortega Orchards, Inc
2 North	11 East	6	SE NW	301	3.9	Ortega Orchards, Inc
2 North	11 East	6	NW NE	500	0.5	Keir, David D

2 North	11 East	6	NE NW	500	0.4	Keir, David D
2 North	11 East	6	NW NE	600	3.3	Cheatham, J North
2 North	11 East	6	NE NW	701	1.3	Cheatham, J North
2 North	11 East	6	NE NW	800	0.5	Cheatham, J North
2 North	11 East	6	NE SW	2000	0.9	Fox, Richard H & Ellana M
2 North	11 East	6	NE SW	2001	2.1	Fox, Richard H & Ellana M
2 North	11 East	6	SE SW	2001	0.8	Fox, Richard H & Ellana M
2 North	11 East	6	NE SW	2100	2.0	Ing, George & Muriel J
2 North	11 East	6	SW SW	2500	0.6	Boyden, Daniel & Julie
2 North	11 East	6	SE SW	2500	0.1	Boyden, Daniel & Julie
2 North	11 East	6	SE SW	3300	0.2	Watts, Brian & Jeanie
2 North	11 East	6	SW SE	3400	0.2	Corrado, Vita C Trust
2 North	11 East	7	SW NE	600	2.0	Scobee, Dale P & Judith A
2 North	11 East	7	SE SE	3000	9.0	Moore, E Bruce & Mary L
2 North	11 East	7	SE SE	3003	2.0	Redhead, Henry L & Verle M
2 North	11 East	18	NW NE	100	0.45	Ceaser, Robert Trustee
2 North	11 East	18	NW NE	300	1.2	Lage Orchards, Inc
2 North	11 East	18	SE NE	400	6.0	Viewmont Orchards, LLC
2 North	11 East	18	SE NE	500	1.0	Viewmont Orchards, LLC
2 North	11 East	18	NE SW	1700	0.5	Lage Orchards, Inc
2 North	11 East	18	SW SW	2700	1.0	Viewmont Orchards, LLC
2 North	11 East	18	NE SE	3500	4.3	Viewmont Orchards, LLC
2 North	11 East	18	NE SE	3600	6.95	Viewmont Orchards, LLC
2 North	11 East	18	SE SE	3800	8.2	Viewmont Orchards, LLC
2 North	11 East	19	NE NE	100	3.1	Wells, W Gowlan & Jeanette TR
2 North	11 East	19	NW NE	100	1.0	Wells, W Gowlan & Jeanette TR
2 North	11 East	19	NE NE	101	3.5	Waller, David P & Nancy Jo
2 North	11 East	19	NE NE	102	2.0	Ellis, Robert M & Davinne
2 North	11 East	19	NE NE	200	6.3	Viewmont Orchards, LLC

2 North	11 East	19	SE NE	200	1.7	Viewmont Orchards, LLC
2 North	11 East	19	SE NE	300	2.2	Viewmont Orchards, LLC
2 North	11 East	19	SE NE	400	12.8	Viewmont Orchards, LLC
2 North	11 East	19	SE NW	600	0.8	Cascade Orchards, Inc
2 North	11 East	19	NE SW	600	0.3	Cascade Orchards, Inc
2 North	11 East	19	NW SW	600	0.1	Cascade Orchards, Inc
2 North	11 East	19	NW SE	600	0.5	Cascade Orchards, Inc
2 North	11 East	19	SW NE	800	3.1	Viewmont Orchards, LLC
2 North	11 East	19	SE NW	800	1.4	Viewmont Orchards, LLC
2 North	11 East	19	SW NE	900	1.0	Viewmont Orchards, LLC
2 North	11 East	19	NW NE	1100	1.0	Lage Orchards, Inc
2 North	11 East	19	NW NW	1300	4.0	Viewmont Orchards, LLC
2 North	11 East	19	SW NW	1700	1.5	Viewmont Orchards, LLC
2 North	11 East	19	SE NW	2100	2.0	Wells, W Gowlan & Jeanette TR
2 North	11 East	19	SW SW	3000	0.3	Evans, David & Polly Matthews
2 North	11 East	30	NW NW	3000	0.2	Evans, David & Polly Matthews
2 North	11 East	19	SE SW	3200	1.5	Rhodes, David M & Diane V
2 North	11 East	30	SW NE	500	0.6	Sischo, Sanford & Heppenstall
2 North	11 East	30	SW NE	600	0.2	Johnston, Dale M & Marilyn
2 North	11 East	30	NW SE	600	0.8	Johnston, Dale M & Marilyn
2 North	11 East	30	NE NW	902	1.7	Willis Family, Inc
2 North	11 East	30	NW NW	1200	0.8	Blue Eagle Orchards, Inc
2 North	11 East	30	SW NW	1200	4.25	Blue Eagle Orchards, Inc
2 North	11 East	30	NW NW	1302	1.6	Mt Adams Oregon, LLC
2 North	11 East	30	SW NW	1302	0.3	Mt Adams Oregon, LLC
2 North	11 East	30	SW NW	1500	0.2	Elk Mountain, LLC
2 North	11 East	30	SW NW	1501	2.0	Elk Mountain, LLC
2 North	11 East	30	SE NW	1501	7.3	Elk Mountain, LLC
3 North	10 East	36	SE NE	601	0.6	Sheppard, Craig W
3 North	11 East	31	NW SE	900	7.0	Wells, Gary W & Maureen F

3 North	11 East	31	SE NW	3001	0.8	Hayes, Robert & Susan
3 North	11 East	31	NE SW	100	6.5	Cheatham, J North
3 North	11 East	31	NW SW	100	0.2	Cheatham, J North
3 North	11 East	31	SE SW	100	3.8	Cheatham, J North
3 North	11 East	31	NW SW	101	1.7	Adams, Glenn D & Marilyn J
3 North	11 East	31	NW SW	300	0.4	Pfost, Jeffery & Beth
3 North	11 East	31	NW SW	600	0.3	Longlund, Ruth P & Nigel P
3 North	11 East	31	NW SW	601	0.2	Tiffany, Ronald R & Patricia
3 North	11 East	31	NW SW	602	0.35	Tiffany, Ronald R & Patricia
3 North	11 East	31	NW SW	800	0.8	Reed, Richard & Christie
3 North	11 East	31	NW SW	803	0.15	Thompson, Mark & Gwen
3 North	11 East	31	NW SW	1100	0.2	Daggett, Douglas C & Darlene
3 North	11 East	31	NW SW	1200	0.2	Randall, Kenneth A

The right to the use of the water for the above purpose is restricted to beneficial use on the lands or place of use described. The use confirmed herein may be made only at times when sufficient water is available to satisfy all prior rights, including rights for maintaining instream flows.

Issued August 25, 2004.

Phillip C. Ward, Acting Director
Water Resources Department

Recorded in State Record of Water Right Certificates Number 80929.

39634.SB

STATE OF OREGON

HOOD RIVER COUNTY

PERMIT TO APPROPRIATE THE PUBLIC WATERS

This is to certify that I have examined APPLICATION 63241 and do hereby grant the same SUBJECT TO EXISTING RIGHTS INCLUDING THE APPROPRIATE MINIMUM FLOW POLICIES ESTABLISHED BY THE WATER POLICY REVIEW BOARD and the following limitations and conditions:

This permit is issued to East Fork Irrigation District of PO Box 162, Odell, Oregon 97044, phone 354-1185, for the use of the waters of East Fork Hood River, a tributary of Hood River, for the PURPOSE of irrigation; that the PRIORITY OF THE RIGHT dates from February 3, 1982, and is limited to the amount of water which can be applied to beneficial use and shall not exceed 0.125 cubic foot per second measured at the point of diversion from the stream, or its equivalent in case of rotation with other water users.

The POINT OF DIVERSION is to be LOCATED: 3,750 feet South and 430 feet East from the Northwest Corner of Section 4, being within the NW 1/4 SW 1/4 of Section 4, Township 1 South, Range 10 East, WM, in the County of Hood River.

A description of the PLACE OF USE under the permit, and to which such right is appurtenant, is as follows:

Township 1 North	Range 10 East, WM	Section 10	NE 1/4	SE 1/4	1.0 acre
			SE 1/4	NE 1/4	2.0 acres
Township 2 North	Range 10 East, WM	Section 28	NW 1/4	SE 1/4	7.0 acres

The AMOUNT OF WATER used for irrigation, together with the amount secured under any other right existing for the same lands, shall be limited to 1/80 of one cubic foot per second per acre, from direct flow and shall be further limited to a diversion of not to exceed 3.0 acre-feet per acre for each acre irrigated during the irrigation season of each year, and shall conform to such reasonable rotation system as may be ordered by the proper state officer.

Actual construction work shall begin on or before June 30, 1983 and shall thereafter be prosecuted with reasonable diligence and be completed on or before October 1, 1984.

Complete application of the water to the proposed use shall be made on or before October 1, 1985.

WITNESS my hand this 30th day of June, 1982.

WATER RESOURCES DIRECTOR

APPLICATION 63241

PERMIT 46707

Application No. 56365 Permit No. 48395

RECEIVED
AUG - 2 1977
WATER RESOURCES DEPT
SALEM, OREGON

STATE OF OREGON WATER RESOURCES DEPARTMENT

Application for Permit to Appropriate Surface Water

I, EAST FORK IRRIGATION DISTRICT (Name of Applicant)

of 3115 Odell Highway (Mailing Address), Hood River (City)

State of Oregon, 97031 (Zip Code) Phone No. 354-1185 do hereby make application for a permit to appropriate the following described waters of the State of Oregon:

1. The source of the proposed appropriation is East Fork of Hood River, a tributary of Hood River

2. The point of diversion is to be located ~~3,625~~ 3750 ft. S. (N. or S.) and ~~560~~ 430 ft. E. (E. or W.) from the NW corner of Section 4 (Public Land Survey Corner)

(If there is more than one point of diversion, each must be described)

being within the NW¼ of ¼ of the SW¼ ¼ of Sec. 4 Tp. 1S. (N. or S.) R. 10 E. (E. or W.), W. M., in the county of Hood River

3. Location of area to be irrigated, or place of use if other than irrigation.

Township	Range	Section	List ¼ ¼ of Section	List use and/or number of acres to be irrigated
		(listed on	seperate sheets)	

Form 690-1-0-1-77

T-9101 & Pou V. 56 p. 1007

4. *The amount of water which the applicant intends to apply to beneficial use is* 4.45 *cubic feet per second* & 0.61 cfs added 8/3/78 Total 5.06 cfs.
(If water is to be used from more than one source, give quantity from each)

5. *The use to which the water is to be applied is* Irrigation

6. *DESCRIPTION OF WORKS*

Include dimensions and type of construction of diversion dam and headgate, length and dimensions of supply ditch or pipeline, size and type of pump and motor, type of irrigation system to adequately describe the proposed distribution system.

Present headgate , canals and pipe lines now being used by the East Fork Irrigation District . No new construction planned except for turn-out gates.

If for domestic use state number of families to be supplied

7. *Construction work will begin on or before*

8. *Construction work will be completed on or before* 10/1/80

9. *The water will be completely applied to the proposed use on or before* 10/1/81

Application No. 56365 *Permit No.* 43395

TOWNSHIP	RANGE	SECTION	FORTY ACRE TRACT	NUMBER of ACRES	
1 N	10 E	1	NW¼ of NE¼	10	Niebolt
			SW¼ of NE¼	10	"
			SE¼ of NW¼	5	Mallon
1 N	10 E	2	NW¼ of NE¼	2	Melville
			NE¼ of SE¼	7.0 ~~5~~	Goss
			SE¼ of SE¼	7.0 ~~5~~	"
1 N	10 E	3	SW¼ of NE¼	10	Allen & Kruck.
			SE¼ of NE¼	5	Bietler
1 N	10 E	10	NW¼ of NE¼	5	Dalton
1 N	10 E	15	NW¼ of NE¼	15	Green
			NE¼ of NW¼	5	wooded
			SE¼ of NW¼	10	" & Miller
			NW¼ of SE¼	11.0 ~~10~~	Milford
			NE¼ of SE¼	3	Baer
			SE¼ of SE¼	5	Martin
			SW¼ of NE¼	18.0 ~~5~~	Weber
			SE¼ of NE¼	5.0 ~~5~~	Short
1 N	10 E	22	NW¼ of NW¼	5	Jenkins
			NE¼ of NW¼	9	Jonke
			NW¼ of SE¼	15.0 ~~10~~	D. Ploy, Ltd.
2 N	10 E	14	SW¼ of NE¼	5	Webster
			SE¼ of NW¼	5	"
			NE¼ of SW¼	2	"
			SE¼ of SW¼	5	Gale
			NE¼ of SE¼	8.0 ~~5~~	Gilkerson
			SE¼ of SE¼	1	Whitecotton
2 N	10 E	21	NW¼ of NE¼	5	Philley
			NE¼ of NE¼	6	Gould
			NE¼ of SW¼	5	Smith
			SE¼ of SW¼	5.0 ~~8~~	Borton
2 N	10 E	22	NE¼ of NW¼	5	Graves
			NW¼ of SE¼	6	Nelson & Benj.
2 N	10 E	24	SE¼ of NW¼	2	Webster
			SE¼ of NE¼	3	Laughlin
2 N	10 E	26	SW¼ of NW¼ ~~NE¼~~ ~~SE¼~~	2	Whitten , ect.
2 N	10 E	27	SE¼ of NW¼	10	Beck
			SW¼ of SW¼	3.0 ~~8~~	C. Williams
2 N	10 E	28	SW¼ of NE¼	3	Walls
			SE¼ of NW¼	5	Anderson
			NE¼ of SE¼	5	Shellman
			SE¼ of SE¼	7.0 ~~5~~	Fletcher
2 N	10 E	29	SW¼ of SW¼	6.0 ~~5~~	Hill & Lee
			NE¼ of SW¼	5	Frazier, ect.
			NW¼ SW¼	4.0	

RECEIVED
AUG - 8 1977
WATER RESOURCES DEPT
SALEM, OREGON

Application No. 56365
Permit No. 43395

1 N	10 E	1	NW¼ of NE¼	10	Niebolt
			SW¼ of NE¼	10	Niebolt
			SE¼ of NW¼	5	Mallon
N	10 E	2	NW¼ of NE¼	2	Melville
			NE¼ of SE¼	5	Goss
			SE¼ of SE¼	5	Goss
1 N	10 E	3	SW¼ of NE¼	10	Kruck. & Allen
			SE¼ of NE¼	5	Bietler
1 N	10 E	10	NW¼ of NE¼	5	Daley
1 N	10 E	15	Nw¼ of NE¼	15	Green
			NE¼ of NW¼	5	wooded
			SE¼ of NW¼	10	" & Miller
			NW¼ of SE¼	10	Milford
			NE¼ of SE¼	3	Baer
			SE¼ of SE¼	5	Martin
			SW¼ of NE¼	6	Smith ect.
			SE¼ of NE¼	3	" "
1N	10 E	22	NW¼ of NW¼	5	Jenkins
			NE¼ of NW¼	9	Jonke
			NW¼ of SE¼	10	D. Ploy, LTD.
2 N	10 E	14	SW¼ of NE¼	5	Webster
			SE¼ of NW¼	5	"
			NE¼ of SW¼	2	"
			SE¼ of SW¼	5	Gale
			NE¼ of SE¼	5	Gilkerson
			SE¼ of SE¼	1	Whitecotton
2 N	10E	21	NW¼ of NE¼	5	Philley
			NE¼ of NE¼	6	Gould
			NE¼ of SW¼	5	Smith
			SE¼ of SW¼	2	Borton
2 N	10 E	22	NE¼ of NW¼	5	Graves
2 N	10 E	24	SE¼ of NW¼	2	Webster
			SE¼ of NE¼	3	Laughlin
2 N	10 E	27	SE¼ of NW¼	10	Beck
			SW¼ of SW¼	2	C. Williams
2 N	10 E	28	SW¼ of NE¼	3	Walls
			SE¼ of NW¼	5	Anderson
			NE¼ of SE¼	5	Shellman
			SE¼ of SE¼	5	Fletcher
2 N	10 E	29	SW¼ of SW¼	5	Hill & Lee
			NE¼ of SW¼	5	Frazier, ect.
	(Add the below September 1982)				
2 N	10 E	36	NW¼ of NW¼	5.8	Hinman
2 N	10 E	36	SE¼ of NE¼	5.0	Gehrig

Please [illegible] the above under Permit 43395

Edwin C. Shaw Inc.

RECEIVED
SEP 17 1982
WATER RESOURCES DEPT.
SALEM, OREGON

TOWNSHIP	RANGE	SECTION	FORTY-ACRE TRACT	NUMBER of ACRES	
2 N	10 E	30	SE¼ of SE¼	5	Jones
2 N	10 E	34	NE¼ of NE¼	4	L.Fletcher
			SE¼ of NE¼	4	"
			SE¼ of ~~SW¼~~ NW¼	5	Gabriel
2 N	10 E	35	NW¼ of NW¼	6	Davis
			SE¼ of NE¼	20	Yasui
2 N	10 E	36	NW¼ of NE¼	13.07	Oates & Collins
			NE¼ of NE¼	5	Cooper
			SW¼ of NE¼	2	Culbertson
			SE¼ of NE¼	3	Swyers
2 N	11 E	6	SW¼ of NW¼	14.08	County Park
2 N	11 E	7	NE¼ of NE¼	2	Leavans
			NW¼ of NE¼	1	Naftsiger
2 N	11 E	19	NW¼ of SE¼	3	Swyers
			SW¼ of SE¼	13.0 10	"
2 N	11 E	30	SE¼ of NW¼	9	Elder
			NE¼ of SW¼	5	Spangler
			NW¼ of NE¼	10	Laughlin
3 N	11 E	31	NW¼ of NW¼	2	Cary & Ogowa
			NE¼ of NW¼	2	Hazeltine
			Total Acres	~~356~~ 405	

E.C.L. 8/3/78

RECEIVED
AUG - 8 1977
WATER RESOURCES DEPT
SACRAMENTO

Application No. 56365
Permit No. 43395

Application No. 56365 Permit No. 43395

Permit to Appropriate the Public Waters of the State of Oregon

This is to certify that I have examined the foregoing application and do hereby grant the same SUBJECT TO EXISTING RIGHTS INCLUDING THE EXISTING FLOW POLICIES ESTABLISHED BY THE WATER POLICY REVIEW BOARD and the following limitations and conditions:

The right herein granted is limited to the amount of water which can be applied to beneficial use and shall not exceed 5.06 *cubic feet per second measured at the point of diversion from the stream, or its equivalent in case of rotation with other water users, from* East Fork Hood River.

The use to which this water is to be applied is irrigation.

If for irrigation, this appropriation shall be limited to 1/80th *of one cubic foot per second or its equivalent for each acre irrigated* and shall be further limited to a diversion of not to exceed 3 acre feet per acre for each acre irrigated during the irrigation season of each year,

and shall be subject to such reasonable rotation system as may be ordered by the proper state officer.

The priority date of this permit is August 8, 1977 for 4.45 c.f.s., and August 3, 1978 for 0.61 c.f.s.

Actual construction work shall begin on or before September 27, 1979 *and shall thereafter be prosecuted with reasonable diligence and be completed on or before October 1, 19*80

Extended to ~~Oct.~~ 1985 Extended to October 1, 1988 Extended to October 1, 1990, 10-1-92, 10-1-93/94

*Complete application of the water to the proposed use shall be made on or before October 1, 19*81

Extended to ~~Oct.~~ 1985 Extended to October 1, 1988 Extended to October 1, 1990, 10-1-92, 10-1-93/94

WITNESS my hand this 27th *day of* September, *19*78

BC ext. 10-1-92

James E. Sexton

Water Resources Director

Remarks: This is for land either cleared and in production since the 1962 survey or land expected to be placed in production in the near future.

East Fork Irrigation District
Signature of Applicant
by Edwin C. Shaw Supt & Sec.

This is to certify that I have examined the foregoing application, together with the accompanying maps and data, and return the same for .....

In order to retain its priority, this application must be returned to the Water Resources Director with corrections on or before ....., *19*.....

WITNESS my hand this ..... *day of* ....., *19*.....

..... *Water Resources Director*

By .....

RECEIVED
AUG 0 4 1978
WATER RESOURCES DEPT.
SALEM, OREGON

This instrument was first received in the office of the Water Resources Director at Salem, Oregon, on the 8 *day of* August, *19* 77, *at* 8:00 *o'clock* A *M.*

Application No. 56365 *Permit No.* 43395

WATER RIGHT WAITING LIST				Updated 2/25/2015
Applicant	**Date**		**Within**	
Legal Description	**Requested**	**Acres**	**District**	**Comments**
Jeff Osborn *	Apr-04	15.00	yes	Using water from Neal Creek on pasture - no rights from Neal Ck.
2N-10-25 Tax Lot 4000				
Wy'east Vineyards, Inc. *	May-04	40.00		
1N-10-02 TL 1806				
Thomas & Connie Betts *	Jul-04	3.00	no	Above the Dukes Valley Canal. May develop the spring on property.
2N-10-34 TL 3100				
Margery Loomis	Dec-04	10.00	yes	Supply pipeline is at full capacity. Need to be on same delivery
1N-10-03 TL 1400				Original request from Don & Betty Packer Dec. 2004
Tobias & Erika Ammon *	Feb-05	1.00	no	Petricko Place - Using water from Mill pond for last 30 yrs.
1N-10-11 Tax Lot 600				Upper Neal Creek Road - Changed from 2 ac to 1 ac (6/1/11)
Thomas Sawyer/Ellen Sawyer *	May-05		no	**Sent Certified Letter w/ respond date 6/22/11 - no Response**
1N-10-10 Tax Lot 1800				wanted 40 acres - Bowcut at full capacity- can't supply
Kevin Codol	Feb-06	0.50	yes	Changed from 3 ac to .50 ac (6/6/11)
2N-10-29 Tax Lot 700				Purchased from Ricardo & Sheri Castaneda(2013)
Cindy Snapp *	Aug-06	1.00		was receiving water from pond on Cederstam's property illegally
2N-10-36DA Tax Lot 1100				
Newman Family Farms *	Feb-93	5.00	yes	5/03 letter (Cheatham) additional water - Ken declined. Offered 8/06 -
2N-11-06 Tax Lot 600				declined. Original request Ron Merz Feb. 1993
Dog River Orchards	Dec-06	5.00	yes	application in to OWRD for well
1N-10-01 Tax Lot 301				
Joe & Maggie Ybarra	Jan-07	5.00	no	
2N-10-28 Tax Lot 2200				
Willis Family, Inc.	Jan-07	2.00	yes	Preparing to sell property for home site. Wants to transfer the wait list
1N-10-03 Tax Lot 2400				application to new owner
John C. Bryant	Jul-99	10.00		Pipeline cannot supply additional water only if on same system. Declined
1N-10-04 Tax Lot 400			no	offer 5 ac. 2007 -- exchanged request on TL 1900 to TL 400 June 07.
Steve & Amy Dunn	Jan-00	0.50		Original request was for 2 acres on TL 4105. Land was divided
2N-10-36DD Tax Lot 700			yes	into two parcels. Split rights onto both parcels 2004. Declined 3/2007
Phill Pettey	Jun-02	1.50		
1N-10-15A, TL 1000			no	Have not built in Green Mt. No definite plans to do so. Declined 3/2007
Anita Hasegawa	Sep-99	0.15		
3N-11-31C Tax Lot 1001			yes	Rec'd additional water 2007 on cleared land- may want more if build house
Anita Hasegawa	Sep-99	0.20		
3N-11-31C Tax Lot 1002			yes	Declined in 2007 - if decides to build will want additional water
Rodney & Tina Meyers	May-07	1.40		
1N-10-22 Tax Lot 503			yes	Had called the office 2000 but no papers were signed or put on list
Jack & Mary Keller	Jun-07	0.20		
2N-10-26BC, Tax Lot 4300			yes	
Peter Durant	Jul-07	1.00		
Lot 9 of the East Hills Develop.				President of HOA for East Hills subdivision would like 1-30 acres
Donald & Merryann Moore	Aug-07	1.25		
2N-10-23 Tax Lot 1900			yes	Original water rights were given up long ago. Problem with delivery?
Julie Semple	Aug-07	0.50		
1N-11-06 Tax Lot 600			yes	Concerned not enough water when pipeline project is completed

Charles & Trisha Peterson	Sep-07	1.00		
1N-10-15 Tax Lot 904				
Kevin & Windi Hunting	Sep-07	0.15		
2N-10-26BC Tax Lot 2700			yes	Original water rights removed and transferred to Dills property
Vawter Parker	Sep-07	10.00		Mud Alley or Ewe & I delivery?
				Original request from Dave DeGroot Sept. 2007
Michelle E. Slade	Sep-07	1.00		
3N-11-31B, TL 1411				
Dean & Brenda Lewis	Oct-07	0.50		property may have sold?
2N-10-27A TL 3701				Mijos Drive
Kevin & Carole Doherty	May-08	5.00		
1N-11-06 Tax Lot 502				include 1N-10-01, TL 100, 2N-10-36DD, TL 300
Steven & Jessica Matous	Aug-02	4.00		
1N-10-15 TL 3900			yes	Live in Vancouver, WA. No house built. Declined offer 7/21/2008.
Gary Thelan	Jul-08	0.40		
2N-10-23 Tax Lot 3400			yes	watering more land than current water right
Lage Orchards, Inc.	Feb-03	20.00		
2N-11-18 TL 100			yes	Eglinton - 2008 transferred 5 ac. (of original 25 ac. request)
Simon & Estela Munoz	Aug-08	2.00		
1N-10-11BD TL 900				Upper Neal Creek Road
Cecil & June Brock	May-09	0.50		
1N-10-11BD TL 1000				Upper Neal Creek Road
Richard K. Bodley	Jun-09	5.00		
2N-10-36 TL 1800				Landlocked property
Charles & Karrie Cantrell	Jul-09	1.00		
1N-10-15 TL 907				Out of District
Howard & Dana Vieweg	Aug-09	0.00		
2N-10-26BC TL 400				Mud Alley
First Baptist Church of Odell	Aug-09	2.00		
2N-10-26B				
James & Beverly Bird	Jan-10	5.00		Purchased from Dick/Charlotte Arnold (2013)
2N-10-34 TL 1700				
Crag Rats - Bernie Wells	Feb-10	3.00		
2N-11-19 TL 1101				
Richard & Teresa Martz	Jun-10	1.00		
1N-10-15 TL 304				Out of District
Thomas & Valerie Godwin	Nov-10	2.50		
1N-10-10D TL 1200				Purchased from Eggers in Green Mtn.
Jayant Joshi	Nov-10	2.50		
2N-10-36 TL 903 Parcel 1				TL 903 divided into 3 parcels
Jason & Jill Sommerset	May-11	1.00		
1N-10-15 TL300			no	document dated 9/16/2010 but not rec'd until 5/17/2011
Kevin & Angela Holcomb	Jun-13	5.00		Purchased from Capovilla Properties, LLC
1N-10-03 TL 600			yes	additional water right - has 1.0 acre requested 1.5 acres
Mt. Hood Forest Products *	Jun-13	62.50		
1N-10-11 Tax Lot 300 & 400			yes	original request Aug. 03 allocated 4.3 ac. June 2013 Regular Transfer industrial rights
Ricardo & Sheri Castaneda	Sep-13	5.00		
2N-10-25 Tax Lot 4100			yes	

Joe Sheirbon	Jan-14	4.80		
2N-10-28 Tax Lot 2000			yes	
Grant & Sandra Porter	Mar-14	5.00		has area of land planted with blueberries - temp. transfer 2014 to cover irrigated land
2N-10-20 Tax Lot 2202			yes	
James W. Stuart	Apr-14	1.00		
2N-10-34, Tax Lot 1400			yes	May do a PLA with Joe Blouin since his barn is on Stuart's property. This would include water rights
Lou & Anne Gehrig	Jun-14	2.00		
2N-11-20 Tax Lot 1301				
Jerry Bailey	Oct-14	0.20	yes	owners responsibility to get water to property as stated on application
2N-10-26BC Tax Lot 100				
David & Tracy Perry	Feb-15	1.00	yes	
1N-10-15A, TL 800				
Ronald & Sarah Brumbaugh	Feb-15	1.00	yes	
1N-10-11BD, TL 600				
TOTAL		259.25		
Water Available				
Name/Legal Description	Acre Amount			
Chamberlin Agriculture	0.60			Has a conflicting water right
2N-10-25B, TL 1008				
Rob Graves 2N-10-22A TL 702	0.15	less .05	0.30	applied to Sheri Mihacsi 3N-10-31B Tax Lot 1701
Randy Graves 2N-10-22A TL 700	~~0.25~~	used		
Cynthia Lou Phelps 1N-10-22B TL 700	0.15			
Silvia Maciel 2N-10-36DC TL 1000	0.10			
Tony White 2N-10-26 TL 1006	1.00			
TOTAL AVAILABLE	**1.35**			

Appendix 2

Tabulation of Water Users

Central System	Acres						
Central System	**3697.15**						
Central Lateral Pipeline	679.40						
Winklebleck Line	92.60						
Gilkerson Line	70.50						
Bietler Line	57.00						
Chipping Line	629.10						
Oanna Diversion	**2013.35**	includes Dethman Ridge Diversion					
Yasui Line	116.00						
Oanna Line	124.95						
Nunamaker Line	159.50						
Neufeldt Line	64.60						
Dethman Ridge Diversion	**1548.30**						
Dethman Ridge Line	1250.00						
Lenz Butte Line	95.45						
Shaw Line	87.60						
Neal Mill Line	115.55						
Allison Line Diversion	**155.20**						
Allison Line	88.50						
Omori Line	66.70						
Christopher Ditch	103.60	Not included in Central System total					
Neal Creek Lateral	70.80	Not included in Central System total					
Dukes Valley System	**Acres**						
Dukes Valley System	**1905.10**						
Dukes Valley Canal	281.85						
Cameron Hill Line	100.80						
Cherry Hill Line	25.90						
Sheirbon Hill Line	106.95						
Marsh/Chamberlin Line Diversion	**431.05**	included Iwatsuki Diversion					
Marsh/Chamberlin Line	42.70						

Sweet Line	55.35						
Rock Acres Line	39.85						
Wheeler Road Line	48.25						
Iwatsuki Box Diversion	**244.90**						
Summit Road Line - Overflow	79.70						
Bartlett Loop Line	14.10						
Wy'east Road Line - North/South	29.10						
Wy'east School Line - Overflow	122.00						
Chamberlin Pressure Line Diversion	**509.05**						
Chamberlin Pressure Line	409.35						
Poole Line	62.80						
Webb Drive Line	36.90						
Highline Canal Diversion	**449.50**						
Highline Canal	252.45						
Shute Road Line	68.70						
Ackerman Hill Line	128.35						
Main Canal	Acres						
Main Canal System	**609.97**						
Main Canal	272.12						
Gabriel Private Rights	3.00						
Fisher Line	27.55						
Brodehl Line	18.60						
Christopher Ditch	103.60						
Bowcut Pipeline	71.50						
Tavern Chute Line	42.80						
Neal Creek Lateral	70.80						
		609.97					
Eastside Canal	**Acres**						
Eastside Canal System	**3263.48**	**beginning at WB**					

Denton/Semple Line	2.80	off CLP not included in Eastside System total					
CLP 8" Pipeline	38.70	off CLP not included in Eastside System total					
Eastside Canal	944.25						
Rasmussen Line	315.15						
Mathieson Line	72.20						
Crag Rat Line	127.30						
Loopline	791.20						
Dethman/Swyers Line	145.05						
Paasch Line	170.55						
Kelly Line	25.05						
Thomsen Line	151.10						
Nafsinger Line	22.30						
Whiskey Creek Diversion	**499.33**	**includes Whiskey Creek and Lower Highline Pipelines**					
Whiskey Creek Pipeline	426.03						
Ewald Line	68.50						
Lariza Line	67.70						
Panorama Point Line	5.00						
Hukari Line	36.70						
Lower Highline	74.30						
Tiffany Line	2.05						
Sheppard Line	23.60						
9/30/2014 This spreadsheet is NOT up to date.							

Central System

Canal/Pipeline	Diversion	Weir Valve #	Customer Name	Property Address	Irrigated Acres	Legal Description	GPM		
Central Lateral Pipeline				**Total Acres: 3697.15**					
Neal Creek Lateral		**M06000**		**Total Acres: 70.80**					
Industrial Water	Pump	M06101	Mt. Hood Forest Products	Upper Neal Creek Rd	5.00	01N10E1100601	**22.45**		
Industrial Water			Mt. Hood Forest Products	Upper Neal Creek Rd	6.20	01N10E1100300	**27.84**		
Industrial Water			Mt. Hood Forest Products	Hwy 35	3.80	01N10E1001000	**17.06**		
Industrial Water			Mt. Hood Forest Products	Upper Neal Creek Rd	6.20	01N10E1100400	**27.84**		
Industrial Water			Mt. Hood Forest Products	Hwy 35	2.00	01N10E1001100	**8.98**		
Industrial Water			Mt Hood Forest Products LLC	Upper Neal Creek Rd	3.00	01N10E1101302	**13.47**		
Industrial Water			Mt Hood Forest Products LLC		0.50	01N10E1100500	**2.25**		
Industrial Water			Mt Hood Forest Products LLC		1.00	01N10E1101200	**4.49**		
				Subtotal:	**27.70**				27.70
Neal Creek Lateral	**Free Water**		Miller/Howard/Vieria		**21.50**		**96.54**		
Once Christopher ditch piped water rights on the 1965 certificate (80928) for free water				**Subtotal:**	**21.50**				21.50
Neal Creek Lateral	Pump	M06003	Steve Richardson	5566 Neal Creek Rd	0.35	01N10E11BD01000	**1.57**		
				Subtotal:	**0.35**				0.35
Neal Creek Lateral	Pump	M06004	Michael Lucas	5611 Neal Creek Rd	1.80	01N10E11BD01200	**8.08**		
				Subtotal:	**1.80**				1.80
Neal Creek Lateral	Pump	M06005	Paul Berty	5564 Neal Creek Rd	1.05	01N10E11BD01100	**4.71**		
				Subtotal:	**1.05**				1.05
Neal Creek Lateral	Pump	M 06006	Lawrence Jacoby	5550 Neal Creek Rd	1.50	01N10E11BD00800	**6.74**		
				Subtotal:	**1.50**				1.50
Neal Creek Lateral	Pump	M06007	Teri Karns	5561 Neal Creek Rd	2.10	01N10E11BD01300	**9.43**		
				Subtotal:	**2.10**				2.10
Neal Creek Lateral	Pump	M06008	Randal Gray	5520 Neal Creek Rd	2.00	01N10E11BD00500	**8.98**		
				Subtotal:	**2.00**				2.00
Neal Creek Lateral	Pump	M06009	Phillip L. Remer	5500 Neal Creek Rd	1.00	01N10E11BD00400	**4.49**		
				Subtotal:	**1.00**				1.00
Neal Creek Lateral	Pump	M06010	Gerd B. Rausch	5460 Neal Creek Rd	1.30	01N10E11BD00100	**5.84**		
				Subtotal:	**1.30**				1.30

Central System

Canal/Pipeline	Diversion	Weir Valve #	Customer Name	Property Address	Irrigated Acres	Legal Description	GPM		
Neal Creek Lateral	Pump	M06011	Kenneth Abercrombie	5475 Neal Creek Rd	2.50	01N10E11BD01400	**11.23**		
				Subtotal:	**2.50**				2.50
Neal Creek Lateral	Pump	M06012	David W. Logsdon	4785 Booth Hill Rd	8.00	01N10E1100800	**35.92**		
				Subtotal:	**8.00**				8.00
Central System				**Total Acres: 3697.15**					
Central Lateral Pipeline		C01000		**Total: 679.40 Acres**					
Central Lateral Pipeline	Pump	C01000	Barbara Hanel	4705 Hwy 35	1.60	01N10E0201804	**7.18**		
			Barbara Hanel	4865 Hwy 35	2.65	01N10E1000200	**11.90**		
			Barbara Hanel	4705 Hwy 35	1.30	01N10E1100301	**5.84**		
				Subtotal:	**5.55**				5.55
Central Lateral Pipeline	2" Valve	C01100	Douglas Caveny	4745 Hwy 35	2.00	01N10E1000201	**8.98**		
				Subtotal:	**2.00**				2.00
Winklebleck Diversion	**8" Valve/ WB**	**C01200**		**Total: 92.60 Acres**					
Winklebleck Line	WB	C01201	Diane E. Adams	3993 Endow Dr	3.90	01N10E0302902	**17.51**		
			Erik Weeman	3940 Endow Dr	2.50	01N10E0302800	**11.23**		
			Robert D. Goddard	3960 Endow Dr	0.70	01N10E0302900	**3.14**		
			Robert D. Goddard	3960 Endow Dr	1.50	01N10E0302903	**6.74**		
				Subtotal:	**8.60**				8.60
Winklebleck Line	WB	C01202	Kevin Holcomb	4075 Central Vale Rd	1.00	01N10E0300600	**4.49**		
				Subtotal:	**1.00**				1.00
Winklebleck Line	WB	C01203	TR Holdings Oregon, LLC	4085 Central Vale Rd	5.40	01N10E0301500	**24.25**		
				Subtotal:	**5.40**				5.40
Winklebleck Line	WB	C01204	Paul E. Harshbarger	3991 Central Vale Rd	8.40	01N10E0301000	**37.72**		
				Subtotal:	**8.40**				8.40
Winklebleck Line	WB	C01205							
Winklebleck Line	Valve	C01205A	Carol Ann Trejo	3880 Central Vale Dr	49.40	02N10E3404400	**221.81**		
Winklebleck Line		C01205B	Christopher E. Davis	4095 Central Vale Rd	0.50	01N10E0300800	**2.25**		
			Kurt L. Stender	4101 Central Vale Rd	0.50	01N10E0300900	**2.25**		
Winklebleck Line	WB	C01205C	Kevin Slagle	4050 Central Vale Rd	9.00	02N10E3403700	**40.41**		

Central System

Canal/Pipeline	Diversion	Weir Valve #	Customer Name	Property Address	Irrigated Acres	Legal Description	GPM		
			Max Douthit ???	3960 Wy'east Rd	4.80	02N10E3403800	**21.55**		
			Donald Hausinger Living Trust	4132 Central Vale Dr	5.00	02N10E3403900	**22.45**		
				Subtotal:	**69.20**				69.20
Central Lateral Pipeline	2" Valve	C01300	Barbara Hanel	4865 Hwy 35	3.45	01N10E1000100	**15.49**		
			Mike Lucas/Allison Nunamaker	4695 Hwy 35	5.10	01N10E0303100	**22.90**		
				Subtotal:	**8.55**				8.55
Gilkerson Diversion	**8" Valve**	**C01400**		**Total Acres: 70.50**					
Gilkerson Line	WB	C01401A	Vernon F. Johnson	3920 Endow Dr	1.50	01N10E0302701	**6.74**		
			Richard Cathey	4420 Hwy 35	0.80	01N10E0302600	**3.59**		
				Subtotal:	**2.30**				2.30
Gilkerson Line		C01401B	Charles E. Weseman	4400 Hwy 35	5.00	01N10E0302602	**22.45**		
				Subtotal:	**5.00**				5.00
Gilkerson Line	WB	C01403A	Joseph W. Sheirbon, Jr.	4501 Central Vale Rd	35.60	01N10E0300500	**159.84**		
				Subtotal:	**35.60**				35.60
Gilkerson Line		C01403B	Isabel Gilkerson	3995 Central Vale Rd	0.70	01N10E0300300	**3.14**		
			Isabel Gilkerson	3995 Central Vale Rd	25.50	01N10E0300400	**114.50**		
	1" Valve	C01403C	James Matthews	3870 Central Vale Rd	1.40	02N10E3404300	**6.29**		
				Subtotal:	**27.60**				27.60
Central Lateral Pipeline	2' Valve	C01500	Richard A. Furrow	4455 Hwy 35	2.80	01N10E0302700	**12.57**		
				Subtotal:	**2.80**				2.80
Central Lateral Pipeline	2' Valve	C01600	Wy'east Vineyards	Booth Hill Rd	2.00	01N10E0201806	**8.98**		
				Subtotal:	**2.00**				2.00
Bietler Diversion	**8" Valve**	**C01700**		**Total Acres: 57.00**					
Bietler Line	WB	C01701	Betty Anita Burris	4320 Hwy 35	9.30	01N10E0300700	**41.76**		
				Subtotal:	**9.30**				9.30
Bietler Line	WB	C01702	A. Lynette Shere	4300 Hwy 35	1.50	01N10E0201200	**6.74**		
				Subtotal:	**1.50**				1.50
Bietler Line	WB	C01703A	Harrison Peters	3735 Central Vale Rd	21.80	01N10E0300200	**97.88**		
				Subtotal:	**21.80**				21.80

Central System

Canal/Pipeline	Diversion	Weir Valve #	Customer Name	Property Address	Irrigated Acres	Legal Description	GPM		
Bietler Line		C01703B	Richard Alan Packer	3705 Central Vale Rd	14.00	02N10E3405100	**62.86**		
			Richard Alan Packer	3775 Central Vale Rd	10.40	01N10E0300100	**46.70**		
				Subtotal:	**24.40**				24.40
Central Lateral Pipeline	2" Valve	C01800	Jim Diem	4415 Hwy 35	0.50	01N10E0302603	**2.25**		
				Subtotal:	**0.50**				0.50
Central Lateral Pipeline	2" Valve	C01900	Elaine Walker	4335 Hwy 35	1.00	01N10E0201300	**4.49**		
				Subtotal:	**1.00**				1.00
Central Lateral Pipeline	2" Valve	C02000	Tyler Gray	4260 Hwy 35	0.50	01N10E0201201	**2.25**		
			David Alan Kaplan	4250 Hwy 35	0.80	01N10E0201400	**3.59**		
			Donald W. Walker	4297 Hwy 35	1.00	01N10E0201401	**4.49**		
				Subtotal:	**2.30**				2.30
Central Lateral Pipeline	8" Valve	C02100	Harrison Peters	3735 Central Vale Rd	13.00	02N10E3503000	**58.37**		
			Dwight Moe	4030 Straight Hill Rd	9.70	02N10E3502400	**43.55**		
			Dwight Moe	4030 Straight Hill Rd	10.00	02N10E3502500	**44.90**		
			Dwight Moe	4030 Straight Hill Rd	18.50	02N10E3502600	**83.07**		
			Ronald A. Stewart	3610 Central Vale Rd	13.80	02N10E3502701	**61.96**		
			Chao Hsien Wang	3606 Central Vale Rd	1.00	02N10E3502700	**4.49**		
			Chao Hsien Wang	3606 Central Vale Rd	14.65	01N10E0201000	**65.78**		
			Chao Hsien Wang	3729 Central Vale Rd	36.10	01N10E0201100	**162.09**		
			Shirley A. Cree	4108 Booth Hill Rd	1.00	02N10E3503001	**4.49**		
			Harrison Peters	4155 Hwy 35	14.00	01N10E0201001	**62.86**		
				Subtotal:	**131.75**				131.75
	Valve	C02101a	Peters/Wang/Stewart						
Chipping Line Diversion	**16" Valve**	**C02200**		**Total Acres: 629.10**					
Chipping Line	4" Valve	C02201	Harrison Peters	3792 Central Vale Rd	23.60	02N10E3405000	**105.96**		
				Subtotal:	**23.60**				23.60
Chipping Line	3" Valve	C02202	Philip Yasui	4005 Straight Hill Rd	18.00	02N10E3502900	**80.82**		
				Subtotal:	**18.00**				18.00
Chipping Line	4" Valve	C02203	Jeffery H. Moore	3915 Masse Grade Rd	0.20	02N10E3503800	**0.90**		
			Brendon O'Connell	3891 Masse Grade Rd	3.60	02N10E3503900	**16.16**		
				Subtotal:	**3.80**				3.80

Central System

Canal/Pipeline	Diversion	Weir Valve #	Customer Name	Property Address	Irrigated Acres	Legal Description	GPM		
Chipping Line	3" Valve	C02204	Philip Yasui	3888 Masse Grade Rd	34.00	02N10E3502100	**152.66**		
				Subtotal:	**34.00**				34.00
Chipping Line	4" Valve	C02205	Avalon Orchards, Inc.	3765 Fletcher Dr	11.80	02N10E3404900	**52.98**		
			Avalon Orchards, Inc.	3770 Fletcher Dr	14.30	02N10E3400301	**64.21**		
			Avalon Orchards, Inc.	3735 Fletcher Dr	18.00	02N10E3502300	**80.82**		
				Subtotal:	**44.10**				44.10
Chipping Line	1" Valve	C02206	Eric D. Walker	3851 Straight Hill Rd.	0.30	02N10E3502200	**1.35**		
				Subtotal:	**0.30**				0.30
Chipping Line	Douglas Butte Box	C02207A	Wixman Land Holding, LLC	3799 Straight Hill Rd.	8.20	02N10E3501900	**36.82**		
				Subtotal:	**8.20**				8.20
Chipping Line	Douglas Butte Box	C02207B	Tamura Orchards, Inc.	3711 Masse Grade Rd.	20.50	02N10E3502000	**92.05**		
			Tamura Orchards, Inc.	3711 Masse Grade Rd.	6.90	02N10E3501200	**30.98**		
			Tamura Orchards, Inc.	3711 Masse Grade Rd.	15.20	02N10E3500500	**68.25**		
				Subtotal:	**42.60**				42.60
Chipping Line	Douglas Butte Box	C02207C	Phillip F. Davis	3682 Straight Hill Rd.	8.80	02N10E3501700	**39.51**		
			D&P Orchards, Inc.	3599 Davis Dr.	25.20	02N10E26C03000	**113.15**		
			D&P Orchards, Inc.	3620 Straight Hill Rd.	8.40	02N10E3501600	**37.72**		
			D&P Orchards, Inc.	3585 Straight Hill Rd.	9.00	02N10E3501100	**40.41**		
			D&P Orchards, Inc.	3540 Straight Hill Rd.	9.25	02N10E3501500	**41.53**		
			Jack A. Davis	3551 Davis Dr.	5.00	02N10E26C06201	**22.45**		
			Stolhand, Marjorie A., Trust	3716 Masse Grade Rd.	4.50	02N10E3501400	**20.21**		
			Brian J. Rust	3738 Straight Hill Rd.	1.00	02N10E3501701	**4.49**		
				Subtotal:	**71.15**				71.15
Chipping Line	Douglas Butte Box	C02207D	Kay Hanel	3775 Straight Hill Rd.	1.40	02N10E3501907	**6.29**		
				Subtotal:	**1.40**				1.40
Chipping Line	Douglas Butte Box	C02207E	Amber J. Taylor	3737 Straight Hill Rd.	1.00	02N10E3501903	**4.49**		
			Stephen A. Tyson	3721 Straight Hill Rd.	1.25	02N10E3501902	**5.61**		
			Judith M. DeHart	3741 Straight Hill Rd.	1.65	02N10E3501901	**7.41**		
			Christy P. Emerson	3730 Straight Hill Rd.	1.30	02N10E3501909	**5.84**		
			Christy P. Emerson	3745 Straight Hill Rd.	1.65	02N10E3501905	**7.41**		
			Christy P. Emerson	3755 Straight Hill Rd.	0.90	02N10E3501908	**4.04**		

Central System

Canal/Pipeline	Diversion	Weir Valve #	Customer Name	Property Address	Irrigated Acres	Legal Description	GPM		
			Alvin L. Still, Jr.	3795 Straight Hill Rd.	3.20	02N10E3501906	**14.37**		
			Michael VanDooren	3765 Straight Hill Rd.	2.80	02N10E3501904	**12.57**		
				Subtotal:	**13.75**				13.75
Chipping Line	Douglas Butte Box	C02207F	Straight Hill Farms, LLC	3801 Straight Hill Rd.	19.00	02N10E3501800	**85.31**		
				Subtotal:	**19.00**				19.00
Chipping Line	WB	C02208	Betty H. Johnson	3828 Fletcher Dr.	7.20	02N10E3400400	**32.33**		
			Darla Kroll	3740 Fletcher Dr.	0.20		**0.90**		
				Subtotal:	**7.40**				7.40
Chipping Line	WB	C02209	Heirloom Orchards	3590 AGA Rd.	0.80	02N10E3400100	**3.59**		
			Heirloom Orchards	3596 AGA Rd.	38.50	02N10E3400101	**172.87**		
				Subtotal:	**39.30**				39.30
Chipping Line	Smiley Box	C02210A	Richard H. Fox	3868 Fletcher Dr.	37.80	02N10E3400500	**169.72**		
				Subtotal:	**37.80**				37.80
	Smiley Box	C02210B	Betty Ann DeHart	3900 Fletcher Dr.	2.80	02N10E3404500	**12.57**		
			Jill House	3821 Fletcher Dr.	34.70	02N10E3404600	**155.80**		
			Jill House	3825 Fletcher Dr.	0.20	02N10E3404700	**0.90**		
			Jill House	Fletcher Dr.	4.70	02N10E3404800	**21.10**		
			Reuben T. Landsiedel	3852 Wy'east Rd	0.70	02N10E3401901	**3.14**		
				Subtotal:	**43.10**				43.10
Chipping Line	Fox Box	C02211A	Joe Blouin, Jr.	3670 Wy'east Rd	1.70	02N10E3401201	**7.63**		
			Carol E. Coggin	3713 Wy'east Rd	0.80	02N10E3401300	**3.59**		
			Carol E. Coggin	3725 Wy'east Rd	0.10	02N10E3401800	**0.45**		
			Michael Lee Schneider	3801 Wy'east Rd	2.00	02N10E3401801	**8.98**		
				Subtotal:	**4.60**				4.60
	Fox Box	C02211B	Golden Mountain, LLC	3825 Davis Dr.	6.00	02N10E27D02200	**26.94**		
			Golden Mountain, LLC	3621 Wy'east Rd	8.00	02N10E27D02500	**35.92**		
			Golden Mountain, LLC	3645 Wy'east Rd	47.40	02N10E3400600	**212.83**		
			Paul Jones	3624 Wy'east Rd	0.40	02N10E3400800	**1.80**		
			Max Linder	3608 Wy'east Rd	0.40	02N10E3401202	**1.80**		
				Subtotal:	**62.20**				62.20
Chipping Line	Kennedy Box	C02212	Ana Pauline Kennedy	3550 AGA Rd	14.00	02N10E27D02100	**62.86**		
				Subtotal:	**14.00**				14.00

Central System

Canal/Pipeline	Diversion	Weir Valve #	Customer Name	Property Address	Irrigated Acres	Legal Description	GPM		
Chipping Line	3" Valve	C02213	Ana Pauline Kennedy	3801 Davis Dr	17.00	02N10E27D02102	**76.33**		
				Subtotal:	**17.00**				17.00
Chipping Line	3" Valve	C02214	Fineview, LLC (Ewald)	3796 Davis Dr	0.90	02N10E27D01900	**4.04**		
Mobile Home Park Line 25.40 ac.			John A. Harvey	3800 Davis Dr	0.90	02N10E27D02000	**4.04**		
			Jesus Jimenez	3764 Davis Dr	0.90	02N10E27D01300	**4.04**		
			Layson Addition HA-Hernandez	3410 Layson Rd	2.00	02N10E27D01400	**8.98**		
			Layson Addition HA-Chandler	3450 Layson Rd		02N10E27D01402			
			Layson Addition HA-Villafana	3440 Layson Rd		02N10E27D01403			
			Layson Addition HA-Betancourt	3430 Layson Rd		02N10E27D01404			
			Layson Addition HA-Moore	3420 Layson Rd		02N10E27D01405			
			Layson Addition HA-Rosales	3415 Layson Rd		02N10E27D01406			
			Layson Addition HA-Fletcher	3425 Layson Rd		02N10E27D01408			
			Layson Addition HA-Libby	3435 Layson Rd		02N10E27D01409			
			Layson Addition HA-De la Torre	3455 Layson Rd		02N10E27D01410			
			Jesus C. Sanchez	3782 Davis Dr	0.90	02N10E27D01500	**4.04**		
			Phillip R. Thomas	3786 Davis Dr	0.90	02N10E27D01600	**4.04**		
			Guadalupe Rojas	3790 Davis Dr	0.90	02N10E27D01800	**4.04**		
Shut Off Valve at Cathryn Lane	3" Valve	C02214A	Alfred L. Borton	3430 AGA Rd	0.40	02N10E27D00700	**1.80**		
			William P. Bothwell	3440 AGA Rd	0.40	02N10E27D00800	**1.80**		
			Enoc L. Rivera	3444 AGA Rd	0.30	02N10E27D00900	**1.35**		
			Pedro Y. Crisantos	3762 Davis Dr	0.25	02N10E27D01101	**1.12**		
			Mary Beth Kennedy	3450 AGA Rd	0.60	02N10E27D01000	**2.69**		
			James Godfrey	3422 AGA Rd	0.25	02N10E27D00600	**1.12**		
			James Godfrey	3422 AGA Rd	0.10	02N10E27D00702	**0.45**		
			Claudio Lopez	3420 AGA Rd	0.20	02N10E27D00500	**0.90**		
			Claudio Lopez	3408 AGA Rd	0.30	02N10E27D00503	**1.35**		
			Caroll D. Phillips	3400 AGA Rd	0.20	02N10E27D00501	**0.90**		
			Odell Mobile Home Park, LLC	Odell Mobile Home Park	1.20	02N10E27D01200	**5.39**		
			Maynard P. Ward	3760 Davis Dr	0.30	02N10E27D01100	**1.35**		
Shut Off in South edge of	Valve	C02214B	Daniel Back	3340 AGA Rd	0.50	02N10E27D00203	**2.25**		
Mobile Home Park			Odell Mobile Home Park, LLC	Odell Mobile Home Park	6.20	02N10E27D00201	**27.84**		
			Odell Mobile Home Park, LLC	Odell Mobile Home Park	4.20	02N10E27D00400	**18.86**		
			Odell Mobile Home Park, LLC	Odell Mobile Home Park	0.40	02N10E27D00202	**1.80**		
			Odell Mobile Home Park, LLC	Odell Mobile Home Park	0.30	02N10E27D00504	**1.35**		
			Odell Mobile Home Park, LLC	Odell Mobile Home Park	1.80	02N10E27D00200	**8.08**		

Central System

Canal/Pipeline	Diversion	Weir Valve #	Customer Name	Property Address	Irrigated Acres	Legal Description	GPM		
			Irineo Magana	3360 AGA Rd.	0.20	02N10E27D00502	**0.90**		
				Subtotal:	**25.50**				25.40
Chipping Line	Allen Box	C02215	George Allen	3575 Wy'east Rd	18.30	02N10E27D02400	**82.17**		
				Subtotal:	**18.30**				18.30
Chipping Line	WB	C02216	Goe, Donald L., Trust	3584 Wy'east Rd	16.60	02N10E2707100	**74.53**		
				Subtotal:	**16.60**				16.60
Chipping Line	WB	C02217	Trudi Klinger/Jim Mederios	3400 Wy'east Rd	4.00	02N10E2705600	**17.96**		
			William R. Turner	3450 Wy'east Rd	0.30	02N10E2705800	**1.35**		
			Dyrk A. Pritchett	3686 Lippman Rd	0.50	02N10E2705700	**2.25**		
				Subtotal:	**4.80**				4.80
Chipping Line									
Buckley Line 58.70 Acres	WB	C02218A	Ruth L. Wilson	3335 Wy'east Rd	34.00	02N10E27D00300	**152.66**		
			Ruth L. Wilson	3841 Davis Dr	3.50	02N10E27D00301	**15.72**		
				Subtotal:	**37.50**				37.50
Buckley Line	2" Valve	C02218B	Clarence E. Wilson	3386 Wy'east Rd	3.00	02N10E2705500	**13.47**		
				Subtotal:	**3.00**				3.00
Buckley Line	Valve	C02218C	Pat Allegre	3336 Wy'east Rd	4.00	02N10E2705402	**17.96**		
			Jack Fortner	3301 Wy'east Rd	11.00	02N10E27A04200	**49.39**		
			Janiece E. Gillmouthe	3286 Wy'east Rd	3.20	02N10E2705400	**14.37**		
				Subtotal:	**18.20**				18.20
Central Lateral Pipeline	4" Valve	C02300	D&P Orchards,Inc. (Bosc Hill)	4245 Hwy35	17.50	01N10E0201600	**78.58**		
				Subtotal:	**17.50**				17.50
Central Lateral Pipeline	3" Valve	C02400	H. Michael Pessl	4480 Booth Hill Rd	10.80	01N10E0201800	**48.49**		
2014	*Temp Transfer 6.5 ac. to McNerney*		*and 3.1 ac to Porter*	**Subtotal:**	~~**10.80**~~ ***1.20***		***5.39***		10.80
Central Lateral Pipeline	3" Valve	C02500	Scott D. Holdaway	4355 Booth Hill Rd	2.50	01N10E0201700	**11.23**		
				Subtotal:	**2.50**				2.50
Central Lateral Pipeline	4" Valve	C02600	Terry Endow	4321 Booth Hill Rd	17.40	01N10E0200600	**78.13**		
				Subtotal:	**17.40**				17.40
Central Lateral Pipeline	8" Valve	C02700	Morales Orchards	3993 Hwy 35	36.00	02N10E3503100	**161.64**		
				Subtotal:	**36.00**				36.00

Central System

Canal/Pipeline	Diversion	Weir Valve #	Customer Name	Property Address	Irrigated Acres	Legal Description	GPM		
Central Lateral Pipeline	6" Valve	C02800	Terry Endow	3375 Bone Dr	18.60	01N10E0200700	**83.51**		
				Subtotal:	**18.60**				18.60
Central Lateral Pipeline	4" Valve	C02900	Stephen V. Wolfe	3420 Bone Dr	14.20	01N10E0200500	**63.76**		
				Subtotal:	**14.20**				14.20
Central Lateral Pipeline	4" Valve	C03000	Dillon Family, LLC	4115 Booth Hill Rd	12.80	01N10E0200400	**57.47**		
			P.L. (Peggy) Packer	3280 Bone Dr	9.70	01N10E0200200	**43.55**		
			Sally Packer Aiken	3272 Bone Dr	12.60	01N10E0200300	**56.57**		
				Subtotal:	**35.10**				35.10
Central Lateral Pipeline	6" Valve	C03100	C&S Orchards, LLC	3325 Bone Dr	11.50	01N10E0200800	**51.64**		
			C&S Orchards, LLC	3211 Bone Dr	24.90	01N10E0200900	**111.80**		
				Subtotal:	**36.40**				36.40
Central Lateral Pipeline	4" Valve	C03200	Alexander Klantchnek, Jr.	4382 Willow Flat Rd	26.10	01N10E0202001	**117.19**		
Abandoned Valve				**Subtotal:**	**0.00**				
Oanna Diversion	**20" Valve**	**C03300**		**Total Acres: 2013.35**					
Yasui Line	**WB -Bucky's**	**C03400**		**Total Acres: 116.00**					
Yasui Line	Nakamura Tall Box	C03400							
	Valve	C03400A	Philip Yasui	3720 Willow Flat Rd	19.00	02N10E3504300	**85.31**		
				Subtotal:	**19.00**				19.00
	Valve	C03400B	Carl A.E. Jacobson	3895 Willow Flat Rd	18.50	02N10E3602400	**83.07**		
				Subtotal:	**18.50**				18.50
	Valve	C03400C	Philip Yasui	3703 Willow Flat Rd	1.00	02N10E3503300	**4.49**		
			Philip Yasui	3845 Willow Flat Rd	39.00	02N10E3504200	**175.11**		
				Subtotal:	**40.00**				40.00
	WB	C03400D	Philip Yasui	3845 Willow Flat Rd	0.80	02N10E3500300	**3.59**		
			Philip Yasui	3695 Hwy 35	3.90	02N10E3500400	**17.51**		
			Philip Yasui	3845 Willow Flat Rd	33.80	02N10E3500200	**151.76**		
				Subtotal:	**38.50**				38.50
Oanna Line	**WB**	**C03301**		**Total Acres: 124.95**					
Oanna Line	WB	C03301	Shirley Fairchild	3940 Hwy 35	2.45	02N10E3504200	**11.00**		
			Jess K. Munos	3900 Hwy 35	19.20	02N10E3503500	**86.21**		

Central System

Canal/Pipeline	Diversion	Weir Valve #	Customer Name	Property Address	Irrigated Acres	Legal Description	GPM		
			Troy A. Portner	3645 Willow Flat Rd	0.50	02N10E3503600	**2.25**		
			Maria C. Valdivia	3665 Willow Flat Rd	0.50	02N10E3503501	**2.25**		
			Philip Yasui	3845 Willow Flat Rd	3.60	02N10E3503400	**16.16**		
				Subtotal:	**26.25**				26.25
Nunamaker Diversion	**WB**	**C03500**		**Total Acres: 159.50**					
Nunamaker Line	WB & Valve	C03501	Luke Sloan	3720 Scott Rd	2.00	02N10E3601701	**8.98**		
			Luke Sloan	3720 Scott Rd	28.00	02N10E3601700	**125.72**		
				Subtotal:	**30.00**				30.00
Nunamaker Line	2" Valve	C03502	Philip Downer	3716 Neal Creek Rd	22.40	02N10E3601900	**100.58**		
			Felipe Jimenez	3810 Neal Creek Rd	1.80	02N10E3601901	**8.08**		
				Subtotal:	**24.20**				24.20
Nunamaker Line	2" Valve	C03503	Charles W. Kaufman	3705 Neal Creek Rd	0.20	02N10E3601102	**0.90**		
			Howard R. Marquis	3717 Scott Rd	18.90	02N10E3601500	**84.86**		
				Subtotal:	**19.10**				19.10
Nunamaker Line	2" Valve	C03504	Reva Collins	3607 Neal Creek Rd	9.40	02N10E3601200	**42.21**		
			Reva Collins	3624 Neal Creek Rd	0.40	02N10E3601300	**1.80**		
Not sure on exact split of water rights for Collins??				**Subtotal:**	**9.80**				9.80
Nunamaker Line	2" Valve	C03505	Hinman Orchards, Inc.	3643 Scott Rd	11.60	02N10E3601400	**52.08**		
				Subtotal:	**11.60**				11.60
Nunamaker Line	3" Valve	C03506	Reva Collins	3605 Neal Creek Rd	23.90	02N10E3601301	**107.31**		
				Subtotal:	**23.90**				23.90
Nunamaker Line	2" Valve	C03507	Robert J. Arthur	3583 Neal Creek Rd	1.50	02N10E2504103	**6.74**		
				Subtotal:	**1.50**				1.50
Nunamaker Line	2" Valve	C03508	Ronald Holloway	3563 Neal Creek Rd	1.50	02N10E2504104	**6.74**		
				Subtotal:	**1.50**				1.50
Nunamaker Line	2" Valve	C03509	James B. Edwards	3523 Neal Creek Rd	0.40	02N10E2504101	**1.80**		
				Subtotal:	**0.40**				0.40
Nunamaker Line	2" Valve	C03510	Ricardo Casteneda	3501 Neal Creek Rd	3.20	02N10E2504100	**14.37**		
				Subtotal:	**3.20**				3.20

Central System

Canal/Pipeline	Diversion	Weir Valve #	Customer Name	Property Address	Irrigated Acres	Legal Description	GPM		
Nunamaker Line	2" Valve	C03511	Jeffery A. Osbourn	3471 Neal Creek Rd	2.00	02N10E2504000	**8.98**		
				Subtotal:	**2.00**				2.00
Nunamaker Line	2" Valve	C03512	Cameron R. Axford	3455 Neal Creek Rd	2.40	02N10E2503900	**10.78**		
				Subtotal:	**2.40**				2.40
Nunamaker Line	2" Valve	C03513	Bernardo Nella	3435 Neal Creek Rd	4.25	02N10E2501000	**19.08**		
				Subtotal:	**4.25**				4.25
Nunamaker Line	2" Valve	C03514	Linda G. McKenzie	3391 Neal Creek Rd	2.40	02N10E2501001	**10.78**		
				Subtotal:	**2.40**				2.40
Nunamaker Line	2" Valve	C03515	Elizabeth J. O'Bannon	3391 Neal Creek Rd	2.50	02N10E2500900	**11.23**		
				Subtotal:	**2.50**				2.50
Nunamaker Line	2" Valve	C03516	Phyllis M. Van Horn	3355 Neal Creek Rd	5.40	02N10E2500800	**24.25**		
				Subtotal:	**5.40**				5.40
Nunamaker Line	2" Valve	C03517	Leonard Mays	3323 Neal Creek Rd	1.00	02N10E2500700	**4.49**		
				Subtotal:	**1.00**				1.00
Nunamaker Line	2" Valve	C03518	Brian D. Chenoweth	3317 Neal Creek Rd	2.65	02N10E2500600	**11.90**		
				Subtotal:	**2.65**				2.65
Nunamaker Line	2" Valve	C03519	Uziel Galvez	3327 Neal Creek Rd	0.20	02N10E2500701	**0.90**		
				Subtotal:	**0.20**				0.20
Nunamaker Line	Valve	C03520	Kirst & R. Corp.	3187 Hwy 35	11.50	02N10E2500300	**51.64**		
				Subtotal:	**11.50**				11.50
Oanna Line	WB	C03302A	Hinman Orchards, Inc.	3065 Sunday Dr	2.60	02N10E25C01100	**11.67**		
	4" Valve		Hinman Orchards, Inc.	3510 Scott Rd	2.90	02N10E25C01300	**13.02**		
			Hinman Orchards, Inc.	3530 Scott Rd	5.60	02N10E25C01400	**25.14**		
			Hinman Orchards, Inc.	3485 Hwy 35	1.20	02N10E26D02100	**5.39**		
			Hinman Orchards, Inc.	3710 Scott Rd	33.00	02N10E3601600	**148.17**		
			Hinman Orchards, Inc.	3712 Scott Rd	0.70	02N10E3601603	**3.14**		
				Subtotal:	**46.00**				46.00
		C03302B	Avalon Orchards, Inc.	3617 Hwy 35	36.30	02N10E3500101	**162.99**		
	4" Valve		Avalon Orchards, Inc.	3517 Hwy 35	6.60	02N10E26D02400	**29.63**		

Central System

Canal/Pipeline	Diversion	Weir Valve #	Customer Name	Property Address	Irrigated Acres	Legal Description	GPM		
			Avalon Orchards, Inc.	Hwy 35	5.85	02N10E3500603	**26.27**		
			Avalon Orchards, Inc.	3605 Hwy 35	3.60	02N10E3500704	**16.16**		
			Misako Takasumi	3615 Hwy 35	0.30	02N10E3500100	**1.35**		
			Misako Takasumi	3601 Hwy 35	0.05	02N10E3500601	**0.22**		
				Subtotal:	**52.70**				52.70
Neufeldt Line	**WB/6" Valve**	**C03600**		**Total Acres: 64.60**					
Neufeldt Line	Davis Box	C03601A	Phillip F. Davis	3600 Hwy 35	1.20	02N10E3500600	**5.39**		
			Phillip F. Davis	3577 Graves Rd	13.50	02N10E3501000	**60.62**		
				Subtotal:	**14.70**				14.70
	2" Valve	C03601Ab	Pablo R. Vega Villalobos	3595 Hwy 35	0.80	02N10E3500800	**3.59**		
			Karl Nachmann	3585 Hwy 35	0.40	02N10E3500702	**1.80**		
			Jimmie Oates, Trust	3587 Hwy 35	1.00	02N10E3500703	**4.49**		
				Subtotal:	**2.20**				2.20
Neufeldt Line		C03601B							
	2" Valve	C03601Ba	Michael Beckner	3581 Hwy 35	2.00	02N10E26D03000	**8.98**		
	Valve	C03601Bb	Douglas Neufeldt	3439 Davis Dr	18.50	02N10E26D02900	**83.07**		
			Douglas Neufeldt	Davis Dr	5.00	02N10E26D02800	**22.45**		
			Douglas Neufeldt	Davis Dr	4.80	02N10E26D02700	**21.55**		
	Valve	C03601Bc	Lance Nielsen	3538 Graves Rd	4.40	02N10E26C06500	**19.76**		
	Valve	C03601Bd	EFID	3500 Graves Rd	1.70	02N10E26Cp6504	**7.63**		
			HREC	Davis Dr	0.85	02N10E26C06700	**3.82**		
			HREC	3505 Davis Dr	0.20	02N10E26C06400	**0.90**		
			HREC	3521 Davis Dr	0.70	02N10E26C06503	**3.14**		
	Valve	C03601Be	Reva Collins	3467 Straight Hill Rd	5.50	02N10E26C06200	**24.70**		
			Crystal Springs Water District	3531 Davis Dr	2.45	02N10E26C06304	**11.00**		
			Leland Wakamatsu	3451 Davis Dr	1.60	02N10E26C06300	**7.18**		
				Subtotal:	**47.70**				47.70
Dethman Ridge Diversion	**WB**	**C03700**		**Total Acres: 1548.30**					
Dethman Ridge Line	WB	C03701A	Hinman Orchrds, Inc.	3085 Sunday Rd	31.00	02N10E25C01000	**139.19**		
			Hinman Orchrds, Inc.	3505 Hwy 35	2.20	02N10E26D02200	**9.88**		
			Hinman Orchrds, Inc.	3580 Scott Rd	9.80	02N10E26D02300	**44.00**		
				Subtotal:	**43.00**				43.00

Central System

Canal/Pipeline	Diversion	Weir Valve #	Customer Name	Property Address	Irrigated Acres	Legal Description	GPM		
Duniphin/Castaneda Line	6" Valve	C03701B	Karen L. Mann	3065 Sunday Rd	0.50	02N10E25C01200	**2.25**		
			Felipe Castaneda	3050 Sunday Rd	7.00	02N10E25C00200	**31.43**		
			Felipe Castaneda	3024 Sunday Rd	27.40	02N10E25C00100	**123.03**		
			Marvin Duniphin	3120 Sunday Rd	6.20	02N10E25C00300	**27.84**		
			Marvin Duniphin	3105 Sunday Rd	3.50	02N10E25C00301	**15.72**		
				Subtotal:	**44.60**				44.60
Dethman Ridge Line	3" Valve	C03702	Lawrence Jones	3331 Davis Dr	0.10	02N10E26D02600	**0.45**		
			Lawrence Jones	3331 Davis Dr	4.00	02N10E26D02500	**17.96**		
				Subtotal:	**4.10**				4.10
Dethman Ridge Line	Should be removed	C03703	~~Lariza Orchards, Inc.~~	3385 Stadelman Dr		02N10E26D01300	**0.00**		
transferred water to Rasmussen Line				**Subtotal:**	**0.00**				
Dethman Ridge Line	2" Valve	C03704	Richard H. Fox	3315 Stadelman Dr	4.20	02N10E26D01100	**18.86**		
			Richard H. Fox	3315 Stadelman Dr	0.60	02N10E26D01200	**2.69**		
				Subtotal:	**4.80**				4.80
Dethman Ridge Line	2" Valve	C03705	Rodney D. Hasty	3373 Neal Mill Rd	0.50	02N10E26D01501	**2.25**		
			Gary A. Lowe	3333 Neal Mill Rd	0.20	02N10E26D01600	**0.90**		
			Esther Smith	3365 Neal Mill Rd	0.30	02N10E26D01601	**1.35**		
			Josh M. Owen	3355 Neal Mill Rd	0.30	02N10E26D01602	**1.35**		
			Juan Maciel	3385 Neal Mill Rd	0.70	02N10E26D01500	**3.14**		
			Levi Landry	3379 Neal Mill Rd	0.50	02N10E26D01502	**2.25**		
				Subtotal:	**2.50**				2.50
Dethman Ridge Line	2" Valve	C03706	Guadalupe Marquez	3245 Stadelman Dr	0.70	02N10E26D01400	**3.14**		
				Subtotal:	**0.70**				0.70
Dethman Ridge Line	4" Valve	C03707	Kahler Farms Ranch #2, LLC	3255 Lingren Rd	2.90	02N10E2601004	**13.02**		
			Richard W. Kahler	3257 Lingren Rd	3.00	02N10E2601002	**13.47**		
			Kahler Farms Ranch #2, LLC	3224 Stadelman Dr	20.10	02N10E2601300	**90.25**		
			Kahler Farms Ranch #2, LLC	3224 Stadelman Dr	2.50	02N10E25B00700	**11.23**		
			Edwin E. Thomas	3214 Stadelman Dr	0.20	02N10E2601400	**0.90**		
				Subtotal:	**28.70**				28.70
Dethman Ridge Line	2" Valve	C03708	Tom Bailey	3265 Lingren Rd	1.80	02N10E2601001	**8.08**		

Central System

Canal/Pipeline	Diversion	Weir Valve #	Customer Name	Property Address	Irrigated Acres	Legal Description	GPM		
			Tony DeHart	3305 Lingren Rd	1.90	02N10E2601006	**8.53**		
			Leonardo A. Calderon	3285 Lingren Rd	2.90	02N10E2601005	**13.02**		
			James Carter	3261 Lingren Rd	3.00	02N10E2601003	**13.47**		
			Miles Tennant	3255 Lingren Rd	0.90	02N10E2601000	**4.04**		
				Subtotal:	**11.50**				11.50
Dethman Ridge Line	4" Valve	C03709	Orchard Hill, LLC-Baskins	3292 Neal Creek Mill Rd	5.50	02N10E25B00600	**24.70**		
			Orchard Hill, LLC-Baskins	3187 Stadelman Dr	9.30	02N10E2600800	**41.76**		
			Orchard Hill, LLC-Baskins	3208 Stadelman Dr	17.50	02N10E2601200	**78.58**		
				Subtotal:	**32.30**				32.30
Dethman Ridge Line	2" Valve	C03710	Michael W. Kroeger	3206 Stadelman Dr	2.00	02N10E2601000	**8.98**		
				Subtotal:	**2.00**				2.00
Lenz Butte Line	**12" Valve**	**C03800**		**Total Acres: 182.75 includes Shaw Line**					
Lenz Butte Line	4" Valve	C03801	Vawter Parker	3057 Lingren Rd	7.50	02N10E2600700	**33.68**		
			Vawter Parker	3057 Lingren Rd	1.50	02N10E2600300	**6.74**		
				Subtotal:	**9.00**				9.00
Lenz Butte Line	3" Valve	C03802	Tamio Sumoge	3223 Lingren Rd	9.50	02N10E2600900	**42.66**		
				Subtotal:	**9.50**				9.50
Shaw Line	**8" Valve**	**C03900**		**Total Acres: 87.30**					
Shaw Line	Valve	C03901	Elliot K. Sakamoto	3525 Ehrck Hill Dr	11.10	02N10E26BA00100	**49.84**		
			Elliot K. Sakamoto	3525 Ehrck Hill Dr	2.35	02N10E26BA00101	**10.55**		
			Elliot K. Sakamoto	3525 Ehrck Hill Dr	0.70	02N10E26BA00200	**3.14**		
			Michael R. Udelius	3557 Ehrck Hill Dr	2.45	02N10E26BA00500	**11.00**		
			Theodore K. Weber	3542 Ehrck Hill Dr	0.60	02N10E26BA00400	**2.69**		
				Subtotal:	**17.20**				17.20
Shaw Line	2" Valve	C03902	McCormick Addition Subdivision	**Subtotal:**	**7.95**				
	2" Valve	C03902a	McCormick Addition UG	See Attached	6.70	02N10E26BD00300's	**30.08**		
				Subtotal:	**6.70**				
	Valve	C03902b	Pedro S. Perez	3216 Lingren Rd	0.25	02N10E26BD00202	**1.12**		
			Steven R. Smith	3226 Lingren Rd	0.25	02N10E26BD00203	**1.12**		
			Maximo Villafana	3407 Chevron Dr	0.25	02N10E26BD00204	**1.12**		
			Roy G. Fleming	3403 Chevron Dr	0.25	02N10E26BD00205	**1.12**		
			Evaristo Romero	3405 Chevron Dr	0.25	02N10E26BD00206	**1.12**		

Central System

Canal/Pipeline	Diversion	Weir Valve #	Customer Name	Property Address	Irrigated Acres	Legal Description	GPM		
				Subtotal:	**1.25**				7.95
Shaw Line	1" Valve	C03903	Guillermo Marquez	3180 Lingren Rd	2.35	02N10E26BD00100	**10.55**		
				Subtotal:	**2.35**				2.35
Shaw Line	Valve	C03904	Hood River Valley Park & Rec	Odell Community Park	1.50	02N10E26BA02100	**6.74**		
				Subtotal:	**1.50**				1.50
Shaw Line- Whitesell East	2" Valve	C03905	Adolfo Marquez	3360 Chevron Dr	0.60	02N10E26BD00500	**2.69**		
	4" Valve		Yolanda Gutierrez	3445 Chevron Dr	0.30	02N10E26BD00501	**1.35**		
			Carmella Chavarria	3273 Willow Rd	0.20	02N10E26BD00600	**0.90**		
			Bonifacio Rojas	3263 Willow Rd	0.15	02N10E26BD00700	**0.67**		
			Kerry P. Johnson	3255 Willow Rd	0.15	02N10E26BD00800	**0.67**		
			Deborah E. Phillips	3581 Beachwood Dr	0.15	02N10E26BD00900	**0.67**		
			Martin Toche	3243 Tamarack Rd	0.20	02N10E26BD01000	**0.90**		
			Hilda Marin	3235 Tamarack Rd	0.20	02N10E26BD01100	**0.90**		
			Maunel Marquez Martinez	3227 Tamarack Rd	0.15	02N10E26BD01200	**0.67**		
			Steven Michael Potts	3219 Tamarack Rd	0.15	02N10E26BD01300	**0.67**		
			David W. Webster	3223 Tamarack Rd	0.15	02N10E26BD02401	**0.67**		
			Felipe R. Padilla	3611 Beachwood Dr	0.15	02N10E26BD03200	**0.67**		
			Manuel V. Garcia	3260 Willow Rd	0.15	02N10E26BD03300	**0.67**		
			Lee Ray Back, Jr.	3268 Willow Rd	0.15	02N10E26BD03400	**0.67**		
			Conrado M. Marquez	3274 Willow Rd	0.15	02N10E26BD03500	**0.67**		
				Subtotal:	**3.00**				3.00
Shaw Line	2" Valve	C03906	Holly Meadows Subdivision	see attached	5.20	02N10E26BA01000	**23.35**		
				Subtotal:	**5.20**				5.20
Shaw Line	6" Valve	C03907	Michael R. Udelius	Pasture to Holly Meadows	5.85	02N10E26BA00800	**26.27**		
			David H. Peyton	3581 Ehrck Hill Dr	1.25	02N10E26BA00700	**5.61**		
			David H. Peyton	3579 Ehrck Hill Dr	2.55	02N10E26BA00600	**11.45**		
			Michael J. Goe	3268 Ehrck Hill Dr	12.00	02N10E26BB00100	**53.88**		
	1" Valve	C03907a	David M. Adams	3709 Ehrck Hill Dr	0.45	02N10E26BB00200	**2.02**		
				Subtotal:	**22.10**				22.10
Shaw Line	??" Valve	C03908	John R. Gerstenberger	3115 Odell Hwy	5.30	02N10E26BB00800	**23.80**		
Not sure where valve is located??				**Subtotal:**	**5.30**				5.30
Shaw Line	2" Valve	C03909	Ewe & I Homeowners Assn.	see attached	7.20	02N10E26BB01000	**32.33**		

Central System

Canal/Pipeline	Diversion	Weir Valve #	Customer Name	Property Address	Irrigated Acres	Legal Description	GPM		
			Lois Vance	3121 Odell Hwy	3.30	02N10E26BB00900	**14.82**		
				Subtotal:	**10.50**				10.50
Shaw Line	2" Valve	C03910	Anna Acres Association	see attached	4.15	02N10E26BC07300	**18.63**		
				Subtotal:	**4.15**				4.15
Shaw Line- Whitesell West	4" Valve	C03911		**Total Acres: 2.80**					
Shaw Line- Whitesell West	1" Valve	C03911a	Whitesell Irrigation User Group	see attached	2.55	02N10E26BD01400	**11.45**		
			Salvador Velazquez	3639 Mud Alley Dr	0.25	02N10E26BC04900	**1.12**		
	1" Valve	C03911b	Whitesell west-shut off		0.75				
	1" Valve	C03911c	Whitesell west-shut off		0.45				
				Subtotal:	**2.80**				2.80
Shaw Line-Mud Alley	2" Valve	C03912	Vern A. Burruss	3385 Odell Hwy	1.00	02N10E26BC02300	**4.49**		
Mud Alley Line 5.25 acres			Felipe Marquez	3485 Whitten Rd	0.60	02N10E26BC02400	**2.69**		
			Daniel Farias	3480 Whitten Rd	0.65	02N10E26BC02500	**2.92**		
			Brandon C. Christopherson	3693 Mud Alley Dr	0.35	02N10E26BC02900	**1.57**		
			Ramon Huerta	3465 Whitten Rd	0.20	02N10E26BC02901	**0.90**		
			Gabriel Peregrino-Lopez	3681 Mud Alley Dr	0.50	02N10E26BC03100	**2.25**		
			Amador Valle	3242 Mud Alley Dr	0.10	02N10E26BC03300	**0.45**		
			Jose J. Magana	3015 Chevron Dr	0.25	02N10E26BC05900	**1.12**		
			James C. McCoy	3610 Chevron Dr	0.80	02N10E26BC06000	**3.59**		
				Subtotal:	**4.45**				4.45
	Dole Valve	C03912a	Clarence Decker	3669 Mud Alley Dr	0.05	02N10E26BC03200	**0.22**		
			Indalecio Martinez	3673 Mud Alley Dr	0.35	02N10E26BC03201	**1.57**		
			Juan C. Marquez	3661 Mud Alley Dr	0.05	02N10E26BC03202	**0.22**		
			Victor H. Sandoval	3222 Mud Alley Dr	0.15	02N10E26BC03203	**0.67**		
			Leandro Ventura	3232 Mud Alley Dr	0.20	02N10E26BC03204	**0.90**		
				Subtotal:	**0.80**		**3.59**		0.80
Lenz Butte Line	??" Valve	C03803	Rick A. Graves	3137 Lingren Rd	0.40	02N10E2600600	**1.80**		
			Norman K. Stone	Lingren Rd	8.40	02N10E2600601	**37.72**		
				Subtotal:	**8.80**				8.80
Lenz Butte Line	6" Valve	C03804	Udelius Orchards, Inc.	3558 Ehrck Hill Dr	17.55	02N10E2302100	**78.80**		
			Ana Pauline Kennedy	3540 Ehrck Hill Dr	24.20	02N10E2302200	**108.66**		

Central System

Canal/Pipeline	Diversion	Weir Valve #	Customer Name	Property Address	Irrigated Acres	Legal Description	GPM		
			Ana Pauline Kennedy	3500 Ehrck Hill Dr	24.50	02N10E2302400	**110.01**		
				Subtotal:	**66.25**				66.25
Lenz Butte Line	2" Valve	C03805	Brian L. Cochran	3061 Lingren Rd	0.60	02N10E2600400	**2.69**		
			Michael R. Udelius	3557 Ehrck Hill Dr	0.40	02N10E2600401	**1.80**		
				Subtotal:	**1.00**				1.00
Lenz Butte Line	1" Valve	C03806	Thelen Family Trust	3507 Ehrck Hill Dr	0.30	02N10E2303400	**1.35**		
			Clarence M. Masiker	3503 Ehrck Hill Dr	0.30	02N10E2303500	**1.35**		
			T. Joy White	3505 Ehrck Hill Dr	0.30	02N10E2303600	**1.35**		
				Subtotal:	**0.90**				0.90
Dethman Ridge Line	4" Valve	C03711	Michael J. & Geraldine K. Goe	3184 Neal Mill Rd	16.00	02N10E25B00500	**71.84**		
			Michael J. & Geraldine K. Goe	3268 Ehrck Hill Dr	15.50	02N10E2600200	**69.60**		
				Subtotal:	**31.50**				31.50
Neal Mill Line	**6" Valve**	**C04000**		**Total Acres: 115.55**					
Neal Mill Line	3" Valve	C04001	Lower Mill, LLC (Pet Camp)	3083 Lower Mill Rd	2.00	02N10E25B01302	**8.98**		
			Alloy Holdings, LLC	3070 Lower Mill Rd	0.25	02N10E25B01007	**1.12**		
			Vanco Enterprises, Inc.	3057 Lower Mill Rd	0.45	02N10E25B01009	**2.02**		
			Michael Adams	Neal Creek Mill Rd	0.15	02N10E25B01003			
				Subtotal:	**2.85**				2.85
Neal Mill Line	1" Valve	C04002	Patrick Allegre	3056 Hwy 35	0.50	02N10E2403501	**2.25**		
				Subtotal:	**0.50**				0.50
Neal Mill Line	4" Valve	C04003	Robert Fox	2965 Ehrck Hill Dr	39.10	02N10E2403500	**175.56**		
				Subtotal:	**39.10**				39.10
Neal Mill Line	1" Valve	C04004	Michael G. Muma	3068 Ehrck Hill Dr	0.40	02N10E2403001	**1.80**		
				Subtotal:	**0.40**				0.40
Neal Mill Line	Take out in pond	C04005	Goe, M. & Sons, Inc.	3268 Ehrck Hill Dr	25.00	02N10E2403002	**112.25**		
				Subtotal:	**25.00**				25.00
Neal Mill Line	1" Valve	C04006	Conrad C. Nielsen	2850 Hwy 35	3.50	02N10E2403000	**15.72**		
			Conrad C. Nielsen	2880 Hwy 35	0.30	02N10E2403100	**1.35**		
				Subtotal:	**3.80**				3.80
Neal Mill Line	3" Valve	C04007	Goe Living Trust	3110 Neal Creek Mill Rd	40.30	02N10E25B00100	**180.95**		

Central System

Canal/Pipeline	Diversion	Weir Valve #	Customer Name	Property Address	Irrigated Acres	Legal Description	GPM		
			Goe Living Trust ????	3180 Neal Creek Mill Rd	0.60	02N10E25B00200	**2.69**		
			Dyrk A. Pritchett ?????	3178 Neal Creek Mill Rd	0.50	02N10E25B00300	**2.25**		
				Subtotal:	**41.40**				41.40
Neal Mill Line	2" Valve	C04008	Cardinal IG Company	Neal Creek Mill Rd	2.50	02N10E25B01301	**21.55**		
				Subtotal:	**2.50**				2.50
Dethman Ridge Line	4" Valve	C03712	Goe Living Trust - Tom	3180 Neal Creek Mill Rd	14.70	02N10E25B00400	**66.00**		
			Goe Living Trust		17.50	02N10E2600100	**78.58**		
				Subtotal:	**32.20**				32.20
Dethman Ridge Line	6" Valve	C03713	Rick Nishimoto	3123 Ehrck Hill Dr	25.20	02N10E2403300	**113.15**		
				Subtotal:	**25.20**				25.20
Dethman Ridge Line	6" Valve	C03714	Nishimoto, Lily C., Trust	3207 Ehrck Hill Dr	30.00	02N10E2303900	**134.70**		
				Subtotal:	**30.00**				30.00
Dethman Ridge Line	6" Valve	C03715	Norman K. Stone	3505 Ehrck Hill Dr	7.05	02N10E2303602	**31.65**		
			Norman K. Stone	3347 Ehrck Hill Dr	17.80	02N10E2303700	**79.92**		
			Norman K. Stone	3347 Ehrck Hill Dr	0.50	02N10E2303702	**2.25**		
				Subtotal:	**25.35**				25.35
Dethman Ridge Line	3" Valve	C03716	Norman K. Stone	3480 Ehrck Hill Dr	8.35	02N10E2303200	**37.49**		
				Subtotal:	**8.35**				8.35
Dethman Ridge Line	2" Valve	C03717	Charles W. Bugge	3481 Ehrck Hill Dr	0.50	02N10E2303100	**2.25**		
				Subtotal:	**0.50**				0.50
Dethman Ridge Line	2" Valve	C03718	Goe, M. & Son, Inc. (Ken)	3268 Ehrck Hill Dr	0.45	02N10E2303300	**2.02**		
				Subtotal:	**0.45**				0.45
Dethman Ridge Line	6" Valve	C03719	Larry E. Packer	Ehrck Hill Dr	5.00	02N10E2302702	**22.45**		
			Larry E. Packer	3420 Ehrck Hill Dr	14.75	02N10E2303001	**66.23**		
				Subtotal:	**19.75**				19.75
Dethman Ridge Line	6" Valve	C03720	Ana Pauline Kennedy	3491 Ehrck Hill Dr	20.00	02N10E2302500	**89.80**		
	1" Valve	C03720a	Anita Kramer	3488 Ehrck Hill Dr	0.40	02N10E2302300	**1.80**		
				Subtotal:	**20.40**				20.40
Dethman Ridge Line	4" Valve	C03721	Beachman Orchards, Inc.	Dethman Ridge Dr	13.30	02N10E2301805	**59.72**		

Central System

Canal/Pipeline	Diversion	Weir Valve #	Customer Name	Property Address	Irrigated Acres	Legal Description	GPM		
	1" Valve private	C03721a	Lisa Gabriel	3689 Dethman Ridge Dr	1.70	02N10E2301800	**7.63**		
			Robert W. Stewart	3661 Dethman Ridge Dr	0.50	02N10E2301806	**2.25**		
			Donna Kay Chestnut	2925 Odell Hwy	0.50	02N10E2302002	**2.25**		
				Subtotal:	**16.00**				16.00
Dethman Ridge Line	2" Valve	C03722	Jose Elisea	3472 Ehrck Hill Dr	0.50	02N10E2302701	**2.25**		
				Subtotal:	**0.50**				0.50
Dethman Ridge Line	4" Valve	C03723	Roberta Solle	3324 Ehrck Hill Dr	14.50	02N10E2302700	**65.11**		
			Roberta Solle	3324 Ehrck Hill Dr	0.60	02N10E2303000	**2.69**		
			Roberta Solle	3324 Ehrck Hill Dr	3.95	02N10E2303002	**17.74**		
				Subtotal:	**19.05**				19.05
Dethman Ridge Line	4" Valve	C03724	Goe, M. & Son, Inc.	2720 Webster Rd	8.85	02N10E2300301	**39.74**		
			Goe, M. & Son, Inc.	2730 Ehrck Hill Dr	9.70	02N10E2300600	**43.55**		
			Goe, M. & Son, Inc.	2856 Webster Rd	29.00	02N10E2302800	**130.21**		
			Goe, M. & Son, Inc.	3268 Ehrck Hill Dr	9.40	02N10E2302900	**42.21**		
			Goe, M. & Son, Inc.	3219 Ehrck Hill Dr	9.40	02N10E2303800	**42.21**		
				Subtotal:	**66.35**				66.35
Dethman Ridge Line	4" Valve	C03725	Larry E. Packer	3635 Dethman Ridge Dr	18.40	02N10E2301600	**82.62**		
			Wilma L. Packer	3655 Dethman Ridge Dr	20.00	02N10E2302600	**89.80**		
				Subtotal:	**38.40**				38.40
Dethman Ridge Line	4" Valve	C03726	Beachman Orchards, Inc.	3595 Dethman Ridge Dr	15.00	02N10E2300800	**67.35**		
				Subtotal:	**15.00**				15.00
Dethman Ridge Line	4" Valve	C03727	Beachman Orchards, Inc.	3644 Dethman Ridge Dr	31.20	02N10E2301400	**140.09**		
			Beachman Orchards, Inc.	3500 Dethman Ridge Dr	17.80	02N10E2301502	**79.92**		
			David B. Greene	3552 Dethman Ridge Dr	0.60	02N10E2301500	**2.69**		
				Subtotal:	**49.60**				49.60
Dethman Ridge Line	3" Valve	C03728	Louis P. Gehrig	3571 Dethman Ridge Dr	14.90	02N10E2300900	**66.90**		
				Subtotal:	**14.90**				14.90
Dethman Ridge Line	4" Valve	C03729	Sheppard Orchards, Inc.	3488 Dethman Ridge Dr	18.40	02N10E2301100	**82.62**		
			Ralph Staley	3494 Dethman Ridge Dr	0.30	02N10E2301201	**1.35**		
				Subtotal:	**18.70**				18.70

Central System

Canal/Pipeline	Diversion	Weir Valve #	Customer Name	Property Address	Irrigated Acres	Legal Description	GPM		
Dethman Ridge Line	4" Valve	C03730	Oates Orchards, Inc.	3484 Dethman Ridge Dr	33.50	02N10E2301300	**150.42**		
				Subtotal:	**33.50**				33.50
Dethman Ridge Line	3" Valve	C03731	Beachman Orchards, Inc.	3655 Odell Hwy	3.00	02N10E22A00300	**13.47**		
			Beachman Orchards, Inc.	3680 Dethman Ridge Dr	18.10	02N10E2301804	**81.27**		
			Arlen D. Williams	3652 Dethman Ridge Dr	1.70	02N10E2301700	**7.63**		
				Subtotal:	**22.80**				22.80
Dethman Ridge Line	3" Valve	C03732	Sheppard Orchards, Inc.	3488 Dethman Ridge Dr	5.50	02N10E1402600	**24.70**		
			Daniel W. Sheppard	3480 Dethman Ridge Dr	3.00	02N10E1402700	**13.47**		
				Subtotal:	**8.50**				8.50
Dethman Ridge Line	3/4" Valve	C03733	David Sheppard	3490 Dethman Ridge Dr	0.70	02N10E1403200	**3.14**		
				Subtotal:	**0.70**				0.70
Dethman Ridge Line	6" Valve	C03734	Gale Orchards, Inc.	2420 Gilkerson Rd	54.60	02N10E1402800	**245.15**		
				Subtotal:	**54.60**				54.60
Dethman Ridge Line	3/4" Valve	C03735	Robert L. Norton	3476 Dethman Ridge Dr	0.20	02N10E1403100	**0.90**		
				Subtotal:	**0.20**				0.20
Dethman Ridge Line	6" Valve	C03736	Webster Orchards	3300 Redwood Dr	33.90	02N10E1400400	**152.21**		
			Webster Orchards-Addison's h	3250 Redwood Dr	1.75	02N10E1400401	**7.86**		
			Webster Orchards-Labor hous	3200 Redwood Dr	0.90	02N10E1400402	**4.04**		
			Webster Orchards	3400 Redwood Dr	16.25	02N10E1400403	**72.96**		
			Webster Orchards	Redwood Dr	5.00	02N10E1400500	**22.45**		
			Webster Orchards	Redwood Dr	1.00	02N10E1400600	**4.49**		
			Webster Orchards	3500 Redwood Dr	12.60	02N10E1401400	**56.57**		
			Webster Orchards	3460 Redwood Dr	5.40	02N10E1401900	**24.25**		
			Webster Orchards-Scott's hou	3500 Redwood Dr	1.20	02N10E1401902	**5.39**		
			Webster Orchards	Redwood Dr	26.80	02N10E1401903	**120.33**		
				Subtotal:	**104.80**				104.80
Dethman Ridge Line	??" Valve	C03737	Goe, Donald L., Trust	2825 Webster Rd	28.00	02N10E2403200	**125.72**		
Webster Road 43.05 Acres				**Subtotal:**	**28.00**				28.00
Dethman Ridge Line	2" Valve	C03738	Linda Vandenberg	2787 Webster Rd	4.10	02N10E2402301	**18.41**		
Webster Road				**Subtotal:**	**4.10**				4.10
Dethman Ridge Line	??" Valve	C03739	Dennis L. Berg	2699 Webster Rd	4.25	02N10E2402401	**19.08**		

Central System

Canal/Pipeline	Diversion	Weir Valve #	Customer Name	Property Address	Irrigated Acres	Legal Description	GPM		
Webster Road			Norberto Guadarrama	2697 Webster Rd	0.20	02N10E2402400	**0.90**		
			Carl E. Hughes	2693 Webster Rd	2.00	02N10E2402501	**8.98**		
				Subtotal:	**6.45**				6.45
Dethman Ridge Line	2" Valve	C03740	Carol Sue Kelley	2751 Webster Rd	4.50	02N10E2402300	**20.21**		
Webster Road				**Subtotal:**	**4.50**				4.50
Dethman Ridge Line	4" Valve	C03741	Sheppard Orchards, Inc.	2725 Webster Rd	20.00	02N10E2300700	**89.80**		
			Sheppard Orchards, Inc.	3401 Dethman Rdige Dr	49.40	02N10E2301000	**221.81**		
				Subtotal:	**69.40**				69.40
Dethman Ridge Line	2" Valve	C03742	David V. Dorzab	2726 Webster Rd	0.90	02N10E2300400	**4.04**		
				Subtotal:	**0.90**				0.90
Webster Pressure Line	Valve	C 04100	Calvin L. Cargill, Jr.	2552 Webster Rd	0.60	02N10E2401700	**2.69**		
			Edwards Orchards, Inc.	3177 Dethman Ridge Dr	22.90	02N10E2401901	**102.82**		
			Edwards Orchards, Inc.	3165 Dethman Ridge Dr	0.20	02N10E2401900	**0.90**		
			Stephen P. Vogt	3009 Dethman Ridge Dr	1.00	02N10E2401600	**4.49**		
			Stephen P. Vogt	2641 Webster Rd	20.40	02N10E2401602	**91.60**		
			Ray S. Javadi	2986 Dethman Ridge Dr	3.00	02N10E1302600	**13.47**		
			John E. Krussow	3126 Dethman Ridge Dr	9.00	02N10E1302300	**40.41**		
			Rice & Son Orchards, Inc.	3074 Dethman Ridge Dr	10.10	02N10E1302201	**45.35**		
			Rice & Son Orchards, Inc.	3166 Dethman Ridge Dr	17.20	02N10E1302400	**77.23**		
			Rice & Son Orchards, Inc.	3250 Dethman Ridge Dr	19.70	02N10E1403700	**88.45**		
			Webster Orchards	2670 Webster Rd	17.50	02N10E2402201	**78.58**		
			Webster Orchards	2661 Webster Rd	18.10	02N10E2402500	**81.27**		
			Webster Orchards	2775 Webster Rd	4.85	02N10E2402402	**21.78**		
			Webster Orchards	2670 Webster Rd	0.80	02N10E2402200	**3.59**		
			Webster Orchards	2650 Webster Rd	14.50	02N10E2401800	**65.11**		
				Subtotal:	**159.85**				159.85
Dethman Ridge Line	4" Valve	C03743	Michael J. Goe	3341 Dethman Ridge Dr	19.75	02N10E2300200	**88.68**		
				Subtotal:	**19.75**				19.75
Dethman Ridge Line	3" Valve	C03744	Edwards Orchards, Inc.	3281 Dethman Ridge Dr	1.50	02N10E2300100	**6.74**		
			Edwards Orchards, Inc.	3177 Dethman Ridge Dr	17.90	02N10E2300101	**80.37**		
			Edwards Orchards, Inc.	3177 Dethman Ridge Dr	0.25	02N10E2300201	**1.12**		
				Subtotal:	**19.65**				19.65

Central System

Canal/Pipeline	Diversion	Weir Valve #	Customer Name	Property Address	Irrigated Acres	Legal Description	GPM		
Dethman Ridge Line	4" Valve	C03745	Columbia Gorge Orchards, Inc.	3636 Gilkerson Rd	14.10	02N10E1403300	**63.31**		
			Columbia Gorge Orchards, Inc.	3300 Dethman Ridge Dr	18.30	02N10E1403500	**82.17**		
				Subtotal:	**32.40**				32.40
Dethman Ridge Line	6" Valve	C03746	Gilkerson Orchards, Inc.	2388 Gilkerson Rd	36.80	02N10E1403600	**165.23**		
			Shadowfax Orchards, Inc.	2120 Gilkerson Rd	36.70	02N10E1400300	**164.78**		
				Subtotal:	**73.50**				73.50
Central Lateral Pipeline	4" Valve	C04200	Truman Goss	4376 Willow Flat Rd	1.90	01N10E0101500	**8.53**		
			Alexander Klantchnek, Jr.	4382 Willow Flat Rd	26.10	01N10E0202001	**117.19**		
				Subtotal:	**28.00**				28.00
Central Lateral Pipeline	3" Valve	C04300	Truman Goss (McNerney)	4385 Willow Flat Rd	9.00	01N10E0202000	**40.41**		
			Temp Transfer 6.5 ac from Pessl	**Subtotal:**	~~**9.00**~~ ***15.50***				9.00
Central Lateral Pipeline	4" Valve	C04400	Cynthia Collins	4370 Willow Flat Rd	17.10	01N10E0101400	**76.78**		
				Subtotal:	**17.10**				17.10
Central Lateral Pipeline	4" Valve	C04500	Cynthia Collins	4450 Norman Rd	5.50	01N10E0101600	**24.70**		
			Cynthia Collins	4500 Norman Rd	2.80	01N10E0101700	**12.57**		
				Subtotal:	**8.30**				8.30
Central Lateral Pipeline	6" Valve	C04600	P.L. (Peggy) Packer	3200 Bone Dr	9.70	01N10E0200100	**43.55**		
			Larry E. Packer	4200 Willow Flat Rd	9.50	01N10E0100500	**42.66**		
			Richard Alan Packer	4375 Furrow Dr	19.70	01N10E0100600	**88.45**		
				Subtotal:	**38.90**				38.90
Central Lateral Pipeline	4" Valve	C04700	Cynthia Collins	4374 Willow Flat Rd	18.60	01N10E0101300	**83.51**		
			Robert M. Hill, Estate of	4230 Willow Flat Rd	0.55	01N10E0100700	**2.47**		
			Robert M. Hill, Estate of	4379 Willow Flat Rd	18.50	01N10E0100701	**83.07**		
			James Mallon	4425 Willow Flat Rd	24.70	01N10E0100800	**110.90**		
				Subtotal:	**62.35**				62.35
Central Lateral Pipeline	4" Valve	C04800	Thomas E. Furrow	4381 Norman Rd	5.00	01N10E0101201	**22.45**		
				Subtotal:	**5.00**				5.00
Allison Line Diversion	**8" Valve**	**C04900**		**Total Acres: 155.20 includes Omori Line**					
Allison Line	WB - Pump	C04901A	Thomas S. Rousseau	4179 Willow Flat Rd	8.00	01N10E0100300	**35.92**		
				Subtotal:	**8.00**				8.00

Central System

Canal/Pipeline	Diversion	Weir Valve #	Customer Name	Property Address	Irrigated Acres	Legal Description	GPM		
Allison Line	WB	C04901B							
	4" Valve	C04901Ba	Clifford Nakamura	4130 Willow Flat Rd	22.55	01N10E0100400	**101.25**		
			Clifford Nakamura	4128 Willow Flat Rd	0.15	01N10E0100402	**0.67**		
	4" Valve	C04901Bb	Robert M. Hill, Estate of	4250 Willow Flat Rd	9.70	02N10E3602500	**43.55**		
			Robert M. Hill, Estate of	4250 Willow Flat Rd	19.70	02N10E3602700	**88.45**		
			Wilma L. Packer	3706 Willow Flat Rd	9.50	02N10E3504400	**42.66**		
			Wilma L. Packer	3706 Willow Flat Rd	8.20	02N10E3504500	**36.82**		
			Harrison Peters	3940 Willow Flat Rd	9.20	02N10E3602600	**41.31**		
				Subtotal:	**79.00**				79.00
Allison Line	TO from Overflow	C04901C	Robert L. Williams	3945 Willow Flat Rd	1.50	02N10E3602300	**6.74**		
				Subtotal:	**1.50**				1.50
Omori Line	**WB**	**C04901D**		**Total Acres: 66.70**					
(sub of Allison Line)									
Omori Line	3" Valve	C04901DA	Jesus Enriquez	4121 Willow Flat Rd	14.00	02N10E3602800	**62.86**		
				Subtotal:	**14.00**				14.00
Omori Line	4" Valve	C04901DB	R. Thomas Yasui	3703 Willow Flat Rd	20.00	02N10E3602100	**89.80**		
			Philp Yasui	4007 Willow Flat Rd	14.00	02N10E3602900	**62.86**		
				Subtotal:	**34.00**				34.00
Omori Line	WB	C04901DC	Leila M. Mattox	4000 Sherrard Rd	1.40	02N10E36DC00700	**6.29**		
			Sherrard Farms, LLC - Ketcher	4040 Sherrard Rd	5.30	02N10E36DC00900	**23.80**		
			Sherrard Farms, LLC - Ketcher	4000 Sherrard Rd	3.00	02N10E36DC00800	**13.47**		
				Subtotal:	**9.70**				9.70
Omori Line	3" Valve	C04901DD	Carl A. Jacobson	3905 Willow Flat Rd	9.00	02N10E3602200	**40.41**		
				Subtotal:	**9.00**				9.00
Central Lateral Pipeline	2" Valve	C05000	Craig Mallon	4486 Willow Flat Rd	4.40	01N10E0101000	**19.76**		
			Craig Mallon	4425 Willow Flat Rd	5.20	01N10E0101100	**23.35**		
				Subtotal:	**9.60**				9.60
Central Lateral Pipeline	4" Valve	C05100	Brian Nakamura	4130 Willow Flat Rd	10.00	01N10E0102000	**44.90**		
			Brian Nakamura	4130 Willow Flat Rd	6.50	01N10E0102400	**29.19**		
			Clifford Nakamura	4474 Willow Flat Rd	19.20	01N10E0100900	**86.21**		
				Subtotal:	**35.70**				35.70

Central System

Canal/Pipeline	Diversion	Weir Valve #	Customer Name	Property Address	Irrigated Acres	Legal Description	GPM		
Central Lateral Pipeline	4" Valve	C05200	Antony C. Peters	4500 Willow Flat Rd	15.00	01N10E0102300	**67.35**		
				Subtotal:	**15.00**				15.00
Central Lateral Pipeline	6" Valve	C05300	Dog River Orchards, LLC	4112 Sherrard Rd	88.40	01N10E0100301	**396.92**		
				Subtotal:	**88.40**				88.40
Central Lateral Pipeline	3" Valve	C05400	Martin Burck	3927 Sherrard Rd	2.20	02N10E36DC00500	**9.88**		
Sherrard Road			Tony K. Clark	4067 Sherrard Rd	1.60	02N10E36DC01300	**7.18**		
			Guy M. Stokley	4051 Sherrard Rd	2.30	02N10E36DC00400	**10.33**		
			Merilee Cooper	4077 Sherrard Rd	2.50	02N10E36DC00401	**11.23**		
			Steven Dunn	4075 Sherrard Rd	0.90	02N10E36DD00800	**4.04**		
			Sarah J. Ridley	4100 Neal Creek Rd	0.90	02N10E36DC00200	**4.04**		
			Cassie Nobbs	3982 Neal Creek Rd	0.80	02N10E36DC00100	**3.59**		
			Bruce E. Parker	4055 Sherrard Rd	2.30	02N10E36DC01200	**10.33**		
			Judith Ann Scobee	3991 Sherrard Rd	2.40	02N10E36DC00600	**10.78**		
			Richard K. Slegers	3981 Sherrard Rd	1.00	02N10E36DB01400	**4.49**		
			Sylvia Maciel	4101 Sherrard Rd	0.20	02N10E36DC01100	**0.90**		
				Subtotal:	**17.10**				17.10

Central System

Canal/Pipeline	Diversion	Weir Valve #	Customer Name	Property Address	Irrigated Acres	Legal Description	GPM		
									3767.95
									70.80
Central System	**Acres**								**3697.15**
Central System	**3697.15**								
Central Lateral Pipeline	679.40								
Winklebleck Line	92.60								
Gilkerson Line	70.50								
Bietler Line	57.00								
Chipping Line	629.10								
Oanna Diversion	**2013.35**								
Yasui Line	116.00								
Oanna Line	124.95								
Nunamaker Line	159.50								
Neufeldt Line	64.60								
Dethman Ridge Diversion	**1548.30**								
Dethman Ridge Line	1250.00								
Lenz Butte Line	95.45								
Shaw Line	87.30								
Neal Mill Line	115.55								
Allison Line Diversion	**155.20**								
Allison Line	88.50								
Omori Line	66.70								

Main Canal

Canal/Pipeline	Diversion	Weir Valve #	Customer Name	Property Address	Irrigated Acres	Legal Description	GPM					
Main Canal				**Total Acres: 609.82**								
Main Canal	2"	M01000	Bill Gabriel - **Private Rights**	7255 Hwy 35	3.00	01N10E3401000	**13.47**		**3.00**	**Private Rights**		
				Subtotal:	**3.00**			3.00				
Main Canal	1 1/2" pump	M01100	Luis B. Dominguez	7165 Hwy 35	3.10	01N10E3400600	**13.92**					
		2014	*Leased Instream 2.6 acres*	**Subtotal:**	~~**3.10**~~	***0.50***		3.10		3.10		
Main Canal	5" pump	M01200	Kyle Gray	3995 Aubert Dr	16.00	01N10E2700200	**71.84**					
				Subtotal:	**16.00**			16.00		16.00		
Main Canal	4" ??	M01300	Richelle L. Duckwall	6225 Miller Rd	0.60	01N10E2700201	**2.69**					
				Subtotal:	**0.60**			0.60		0.60		
Main Canal	4" pump	M01400	Gayle M .Goin	6215 Miller Rd	4.40	01N10E2205100	**19.76**					
				Subtotal:	**4.40**			4.40		4.40		
Main Canal	4" pump	M01500	John E. Lowe	6125 Miller Rd	14.40	01N10E2205200	**64.66**					
				Subtotal:	**14.40**			14.40		14.40		
Main Canal	4" pump	M01600	Patricia T. Wickwire	6055 Miller Rd	21.00	01N10E2205000	**94.29**					
				Subtotal:	**21.00**			21.00		21.00		
Main Canal	2"	M01700A	Patricia T. Wickwire	5999 Miller Rd	0.30	01N10E2205001	**1.35**					
		M01700B	Quinton Cox	5965 Miller Rd	0.30	01N10E2205002	**1.35**					
				Subtotal:	**0.60**			0.60		0.60		
Main Canal	Take out	M01800	James Byrne	5951 Miller Rd	1.00	01N10E2200504	**4.49**					
			Keith Harding	5947 Miller Rd	0.30	01N10E2200508	**1.35**					
			Kathy Hammon	5915 Miller Rd	0.25	01N10E2200505	**1.12**					
			Kathy Hammon	5915 Miller Rd	0.25	01N10E2200506	**1.12**					
			Jess D. Reed	5935 Miller Rd	0.50	01N10E2200500	**2.25**					
			Ralph Staley	5945 Miller Rd	1.00	01N10E2200502	**4.49**					
			Mark B. Wadman	5949 Miller Rd	1.00	01N10E2200507	**4.49**					
			Craig W. Schlarb	6225 Miller Rd	1.00	01N10E2200501	**4.49**					
				Subtotal:	**5.30**			5.30		5.30		
Main Canal	Take Out	M01900	????									
				Subtotal:								
Main Canal	Take out	M02000A	Paul L Caryl	4000 Herriot Dr	1.64	01N10E2200405	**7.36**					
			Jeffrey P. Lahti	3973 Herriot Dr	1.64	01N10E2200401	**7.36**					
			John B. Church	3930 Herriot Dr	1.74	01N10E2200409	**7.81**					
			Michael Fey	5755 Miller Rd	0.50	01N10E2200403	**2.25**					
			Dean Hardman	3993 Herriot Dr	1.74	01N10E2200406	**7.81**					
			McCormick, Nancy R. Family	Herriot Dr	~~1.44~~	01N10E2200407	**6.47**					
		2014	*McCormick Leased Instream 1.44 acres*									
			Hugh McMahan	3953 Herriot Dr	1.45	01N10E2200408	**6.51**					

Main Canal

Canal/Pipeline	Diversion	Weir Valve #	Customer Name	Property Address	Irrigated Acres	Legal Description	GPM					
			Tim F. Ortlieb	3950 Herriot Dr	1.55	01N10E2200402	**6.96**					
			Tamara E. Shannon	5741 Miller Rd	1.00	01N10E2200400	**4.49**					
				Subtotal:	~~**12.70**~~	***11.26***		12.70		12.70		
	Take Out 6"	M02000B	Frost's Land Surveying & Cattle	Miller Rd	27.00	01N10E22B00401	**121.23**					
			Rodney Thomas	5775 Hwy 35	9.80	01N10E22B00400	**44.00**					
				Subtotal:	**36.80**			36.80		36.80		
Main Canal	Take Out 4"	M02100	Hildegard Hofmann	5795 Miller Rd	11.90	01N10E2200300	**53.43**					
				Subtotal:	**11.90**			11.90		11.90		
Main Canal	Take Out	M02200	David B. Compton	5745 Miller Rd	4.00	01N10E2200205	**17.96**					
				Subtotal:	**4.00**			4.00		4.00		
Main Canal	Take Out 3"	M02300A	Lloyd N. Hawley	5729 Miller Rd	3.00	01N10E2200201	**13.47**					
			Lloyd N. Hawley	5735 Miller Rd	1.00	01N10E2200202	**4.49**					
				Subtotal:	**4.00**			4.00		4.00		
		M02300B	Mark Telep	5725 Miller Rd	1.00	01N10E2200200	**4.49**					
				Subtotal:	**1.00**			1.00		1.00		
		M02300C	Marc Geller	5715 Miller Rd	3.00	01N10E2200203	**13.47**					
			Marc Geller	5715 Miller Rd	2.30	01N10E2200206	**10.33**					
				Subtotal:	**5.30**			5.30		5.30		
Fisher Line 6"	TO - 6"	M02400		**Total: 27.55 Acres**								
Fisher Line	Valve	M02401	Arnold C. Kirkeby	Miller Rd	2.35	01N10E1501800	**10.55**					
			Dave Purdy	Miller Rd	2.35	01N10E1501801	**10.55**					
				Subtotal:	**4.70**			4.70	4.70			
Fisher Line	2" Valve	M02402	Jason Kahler	5630 Miller Rd	0.60	01N10E1501700	**2.69**					
2" Private Line			Carol E. Callicrate	5625 Hwy 35	1.20	01N10E1501701	**5.39**					
			Everett Campbell	5610 Miller Rd	0.20	01N10E1501600	**0.90**					
				Subtotal:	**2.00**			2.00	2.00			
Fisher Line	Valve	M02403	Robin Burgess	5655 Hwy 35	3.00	01N10E1501900	**13.47**					
				Subtotal:	**3.00**			3.00	3.00			
Fisher Line	Valve	M02404	Elise C. Venusti	5718 Miller Rd	2.20	01N10E22B00103	**9.88**					
			Leslie A. Perkins	5728 Miller Rd	3.45	01N10E22B00102	**15.49**					
			Bradley M. Van Natta	5708 Miller Rd	2.25	01N10E22B00100	**10.10**					
				Subtotal:	**7.90**			7.90	7.90			
Fisher Line	Valve	M02405	Robert L. Bowlin	5705 Hwy 35	1.50	01N10E22B00200	**6.74**					
				Subtotal:	**1.50**			1.50	1.50			
Fisher Line	Valve	M02406	Jesus Rodriquez	5735 Hwy 35	3.80	01N10E22B00300	**17.06**					
				Subtotal:	**3.80**			3.80	3.80			

Main Canal

Canal/Pipeline	Diversion	Weir Valve #	Customer Name	Property Address	Irrigated Acres	Legal Description	GPM					
Fisher Line	Valve	M02407	Cynthia Lou Phelps, Trustee	5720 Hwy 35	1.25	01N10E22B00700	**5.61**					
			Timothy J. Green	5700 Hwy 35	0.75	01N10E22B00701	**3.37**					
				Subtotal:	**2.00**			2.00	2.00			
Fisher Line	Valve	M02408	Benigno Kelso	5750 Hwy 35	1.40	01N10E22B00600	**6.29**					
				Subtotal:	**1.40**			1.40	1.40			
Fisher Line	Valve	M02409	Valley Worship Center	5780 Hwy 35	0.25	01N10E22B00601	**1.12**					
			Valley Worship Center	5782 Hwy 35	0.10	01N10E22B01000	**0.45**					
				Subtotal:	**0.35**			0.35	0.35			
Fisher Line	Valve	M02410	Robert Chamberlain	5750 Oregon Rd	0.75	01N10E22B00900	**3.37**					
				Subtotal:	**0.75**			0.75	0.75			
									27.40	**Fisher Line**		
Brodehl Line 4"	TO - 4"	M02500		**Total: 18.60 Acres**								
Brodehl Line		M02500A	Michael S. Colesar	3985 Country Pine Dr	2.50	01N10E15DC00500	**11.23**					
			Robert J. Coury	3955 Country Pine Dr	2.30	01N10E15DC00700	**10.33**					
These people are not all			Shane Thoms	3965 Country Pine Dr	2.50	01N10E15DC00600	**11.23**					
hooked to this line 8/08			Joel A. Pomeroy	5655 Miller Rd	2.20	01N10E15DC00400	**9.88**					
			Joseph Betzing	5685 Miller Rd	1.75	01N10E15DC00800	**7.86**					
			Robert J. Coury	3955 Cedar Ln	2.35	01N10E15DC00803	**10.55**					
			Barbara Davis	3965 Cedar Ln	2.50	01N10E15DC00802	**11.23**					
			Kevin Fallon	3985 Cedar Ln	2.50	01N10E15DC00801	**11.23**					
				Subtotal:	**18.60**			18.60	**18.60**	**Brodehl Line**		
Main Canal	Take Out 3"	M02600	Judith Cobb	5565 Miller Rd	2.60	01N10E1502300	**11.67**					
				Subtotal:	**2.60**			2.60		2.60		
Main Canal	6" wood	M02700	Steve Osserman	5570 Miller Rd	5.20	01N10E15DC00100	**23.35**					
			Patrick Marick	5555 Miller Rd	1.70	01N10E15DC00200	**7.63**					
			Patrick Marick	5635 Miller Rd	1.70	01N10E15DC00300	**7.63**					
				Subtotal:	**8.60**			8.60		8.60		
Main Canal	Take Out 4"	M02800	Eugene Barnhart	5505 Hwy 35	3.00	01N10E1502400	**13.47**					
			Derik Farlow	5475 Burl Rd	0.50	01N10E1502401	**2.25**					
			Karen LaPointe	5485 Burl Rd	0.50	01N10E1502402	**2.25**					
				Subtotal:	**4.00**							
Main Canal	Take Out 3"	M02900	Roger E. Neufeldt	5461 Hwy 35	2.00	01N10E1502500	**8.98**					
			Roger E. Neufeldt	5457 Hwy 35	5.30	01N10E1502501	**23.80**					
				Subtotal:	**7.30**			11.30		11.30		
Main Canal	Take Out 4"	M03000	Jerry Leroy Bailey	5443 Hwy 35	0.60	01N10E1503100	**2.69**					
			Brian L. Schultz	5453 Hwy 35	2.00	01N10E1503102	**8.98**					
			Ronny Luse	5455 Hwy 35	2.00	01N10E1503101	**8.98**					
				Subtotal:	**4.60**			4.60		4.60		

Main Canal

Canal/Pipeline	Diversion	Weir Valve #	Customer Name	Property Address	Irrigated Acres	Legal Description	GPM					
Main Canal	Take Out 3"	M03100	Lori D. Kirkwood	5425 Hwy 35	2.00	01N10E15A03000	**8.98**					
				Subtotal:	**2.00**			2.00		2.00		
Main Canal	Take Out 3"	M03200	P. Aaron Jubitz	5405 Hwy 35	1.60	01N10E15A02900	**7.18**					
			Aaron Weseman	5415 Hwy 35	2.00	01N10E15A02800	**8.98**					
				Subtotal:	**3.60**			3.60		3.60		
Main Canal	Take Out 2"	M03300	Benjamin A. Halseth	5391 Hwy 35	2.00	01N10E15A02700	**8.98**					
			William Broderick	5395 Hwy 35	1.30	01N10E15A02701	**5.84**					
			Walter E. Hinkle	5385 Hwy 35	0.40	01N10E15A02600	**1.80**					
				Subtotal:	**3.70**							
Main Canal	Take Out 2"	M03400	Taylor Bemis	5365 Hwy 35	4.50	01N10E15A02500	**20.21**					
				Subtotal:	**4.50**			8.20		8.20		
Main Canal	Take Out 3"	M03500	Marin Tyler	5327 Hwy 35	0.50	01N10E15A02300	**2.25**					
			Tyler Ranch, LLC	5345 Hwy 35	9.30	01N10E15A02200	**41.76**					
				Subtotal:	**9.80**			9.80		9.80		
Main Canal	Take Out 4"	M03600	Patrick Tomlin	5283 Hwy 35	15.20	01N10E15A00400	**68.25**					
				Subtotal:	**15.20**			15.20		15.20		
Main Canal	Take Out	M03700	Michael L. Zeman	3734 Pine Mont Dr	7.00	01N10E1400300	**31.43**					
Not sure where his TO is??				**Subtotal:**	**7.00**			7.00		7.00		
Main Canal	Take Out 4"	M03800	Randy T. Bailey	5235 Hwy 35	13.00	01N10E15A00500	**58.37**					
				Subtotal:	**13.00**			13.00		13.00		
Main Canal	Take Out 3"	M03900	Robert E. Crunkilton	5175 Alpine Dr	2.50	01N10E15A00200	**11.23**					
			David Paul Nilsen	Alpine Dr	2.30	01N10E15A00201	**10.33**					
			George True	5155 Alpine Dr	2.50	01N10E15A00300	**11.23**					
			Kim L. Yasui	5205 Alpine Dr	2.00	01N10E15A00202	**8.98**					
				Subtotal:	**9.30**			9.30		9.30		
Main Canal	Take Out	M04000	Arnold Bailey	3735 Pine Mont Dr	0.60	01N10E15A00100	**2.69**					
				Subtotal:	**0.60**			0.60		0.60		
Main Canal	Take Out	M04100	William L. Bullack	5115 Hwy 35	2.70	01N10E10D02001	**12.12**					
			William L. Bullack	5105 Hwy 35	1.00	01N10E10D02002	**4.49**					
				Subtotal:	**3.70**			3.70		3.70		
Bowcut Pipeline	WB 10" Culvert	M04200		**Total: 71.50 Acres**								
Bowcut	Pump	M04201	Patrick Monaghan	5080 Hillcrest Rd	1.00	01N10E10D01000	**4.49**					
			Ryan Beam	4002 White Fir Dr	1.00	01N10E10D01007	**4.49**					
				Subtotal:	**2.00**			2.00	2.00			
Bowcut	Pump	M04202	Stephen F. Stegall	5120 Hwy 35	0.50	01N10E10D01500	**2.25**					

Main Canal

Canal/Pipeline	Diversion	Weir Valve #	Customer Name	Property Address	Irrigated Acres	Legal Description	GPM					
				Subtotal:	**0.50**			0.50	0.50			
Bowcut	2" Valve	M04203	Wade B. Hogg	4075 Green Mtn Dr	0.60	01N10E10D01202	**2.69**					
				Subtotal:	**0.60**			0.60	0.60			
Bowcut	2" Valve	M04204	Kenneth D. Potter	4135 Green Mtn Dr	1.00	01N10E15A01100	**4.49**					
				Subtotal:	**1.00**			1.00	1.00			
Bowcut	2" Valve	M04205	Rose Neill	5300 Hwy 35	1.00	01N10E15A01500	**4.49**					
				Subtotal:	**1.00**			1.00	1.00			
Bowcut	2" Valve	M04206	John R. Cyr	5310 Hwy 35	3.00	01N10E1500400	**13.47**					
				Subtotal:	**3.00**			3.00	3.00			
Bowcut	2" Valve	M04207	John Riley	4037 Nastasi Dr	0.25	01N10E1500601	**1.12**					
			Tony Weseman	4042 Nastasi Dr	0.25	01N10E1500501	**1.12**					
			Michael Nastasi	4030 Nastasi Dr	0.25	01N10E15A01600	**1.12**					
			Johan Christian Bagge	4025 Nastasi Dr	0.25	01N10E15A01700	**1.12**					
				Subtotal:	**1.00**			1.00	1.00			
Bowcut	2" Valve	M04208	Martha Patton	5430 Hwy 35	1.60	01N10E1500901	**7.18**					
				Subtotal:	**1.60**			1.60	1.60			
Bowcut	3" Valve	M04209	Darrell Miller, Trustee	4280 KLM Dr	1.90	01N10E1500900	**8.53**					
			Darrell Miller, Trustee	4280 KLM Dr	2.00	01N10E1500909	**8.98**					
			Darrell Miller, Trustee	4280 KLM Dr	4.00	01N10E1500910	**17.96**					
				Subtotal:	**7.90**			7.90	7.90			
Bowcut	Valve	M04210	Tracy Nash	4210 KLM Dr	2.00	01N10E1500902	**8.98**					
				Subtotal:	**2.00**			2.00	2.00			
Bowcut	Valve	M04211	Clifford Lucas	4305 KLM Dr	1.50	01N10E1500905	**6.74**					
				Subtotal:	**1.50**			1.50	1.50			
Bowcut	Valve	M04212	Guy K. Cosens	4255 KLM Dr	0.50	01N10E1501100	**2.25**					
				Subtotal:	**0.50**			0.50	0.50			
Bowcut	Valve	M04213	Kerri Robinson/Karen Weisz	5454 Hwy 35	1.00	01N10E1502600	**4.49**					
				Subtotal:	**1.00**			1.00	1.00			
Bowcut	Valve	M04214	Dexter Parton	5630 Hwy 35	21.50	01N10E1501500	**96.54**					
			Dexter Parton	5600 Oregon Rd	3.00	01N10E15CC00100	**13.47**					
				Subtotal:	**24.50**			24.50	24.50			
Bowcut	Valve	M04215	Oregon Road User Group	Pamela Howard	0.45	01N10E15CC00400	**2.02**					
			Oregon Road User Group	David B. Jenkins	1.75	01N10E15CC00500	**7.86**					
			Oregon Road User Group	David B. Jenkins	1.20	01N10E15CC00700	**5.39**					
			Oregon Road User Group	David B. Jenkins	0.80	01N10E15CC00800	**3.59**					

Main Canal

Canal/Pipeline	Diversion	Weir Valve #	Customer Name	Property Address	Irrigated Acres	Legal Description	GPM					
			Oregon Road User Group	Brady Claussen	1.00	01N10E15CC01000	**4.49**					
			Oregon Road User Group	Brady Claussen	0.50	01N10E15CC01100	**2.25**					
			Oregon Road User Group	John R. Stoltz	2.40	01N10E15CC00900	**10.78**					
			Oregon Road User Group	John R. Stoltz	2.00	01N10E15CC01500	**8.98**					
			Oregon Road User Group	John R. Stoltz	1.20	01N10E15CC01200	**5.39**					
			Oregon Road User Group	John R. Stoltz	0.50	01N10E15CC01201	**2.25**					
			Oregon Road User Group	John R. Stoltz	0.30	01N10E15CC01202	**1.35**					
Need to remove Rosenlof and Jenkins from			Oregon Road User Group	John R. Stoltz	1.80	01N10E15CC01300	**8.08**					
M 04116 include in Oregon Road User Gp.			Oregon Road User Group	Robin Goodyer	1.80	01N10E15CC01400	**8.08**					
			Oregon Road User Group	Jose Magana	0.30	01N10E22B00800	**1.35**					
			Oregon Road User Group	Richard Powell	0.50	01N10E22B01101	**2.25**					
			Oregon Road User Group	Ed King	2.25	01N10E22B01111	**10.10**					
			Oregon Road User Group	David B. Jenkins	1.55	01N10E22B01112	**6.96**					
			Oregon Road User Group	David B. Jenkins	0.90	01N10E22B01116	**4.04**					
				Subtotal:	**21.20**			21.20	21.20			
Bowcut	Valve	M04216	Oregon Road User Group	Jay A. Rosenlof	0.60	01N10E15CC00200	**2.69**					
			Sarah Raab	5610 Oregon Rd	0.50	01N10E15CC00300	**2.25**					
			Oregon Road User Group	David B. Jenkins	1.10	01N10E15CC00600	**4.94**					
				Subtotal:	**2.20**			2.20	2.20			
									71.50	**Bowcut Pipeline**		
Main Canal		M04300	Nicholson Family Trust	3730 Pine Mont Dr	2.00	01N10E10D01800	**8.98**	2.00				
		2015	*Nicholson Leased Instream 2 acres*	**Subtotal:**	~~**2.00**~~	***0.00***						
Christopher Ditch	Take Out	M04400		**Total: 103.60 Acres**								
Christopher Ditch	Take Out	M04401	Robert Cornelison	4975 Hwy 35	0.50	01N10E10D00400	**2.25**	0.50		0.50		
				Subtotal:	**0.50**							
Christopher Ditch	Take Out	~~M04402~~	~~Mt Hood Forest Products LLC~~	Upper Neal Creek Rd	4.00	01N10E1101301	**17.96**					
	Remove Takeout		~~Mt Hood Forest Products LLC~~	4915 Hwy 35	4.50	01N10E10D00200	**20.21**					
transferred to industrial wr mill site			~~Mt Hood Forest Products LLC~~	Upper Neal Creek Rd	4.10	01N10E10D00300	**18.41**					
				Subtotal:	~~**12.60**~~							
Christopher Ditch	3" Valve	M04403	Marcos Barnatan	5058 Booth Hill Rd	14.90	01N10E1101501	**66.90**	14.90		14.90		
				Subtotal:	**14.90**							
Christopher Ditch	Valve	M04404	Ronald L. Smith	5060 1/2 Booth Hill Rd	1.00	01N10E1101601	**4.49**					
			Zachery L. Smith	5062 Booth Hill Rd	0.30	01N10E1101603	**1.35**					
			Randell L. Smith	5062 Booth Hill Rd	2.00	01N10E1101600	**8.98**					
				Subtotal:	**3.30**			3.30		3.30		
Christopher Ditch	WB	M04405	Alan J. Bell	4890 Booth Hill Rd	63.00	01N10E1100801	**282.87**					
			Alan J. Bell	4890 Booth Hill Rd	7.70	01N10E1100802	**34.57**					
				Subtotal:	**70.70**			70.70		70.70		
Christopher Ditch	WB	M04406	Shane Losse	5170 Booth Hill Rd	0.90	01N10E1101702	**4.04**					
			Jack R. Keller	5080 Booth Hill Rd	1.00	01N10E1101703	**4.49**					

Main Canal

Canal/Pipeline	Diversion	Weir Valve #	Customer Name	Property Address	Irrigated Acres	Legal Description	GPM					
			Rita Dorzab, Mary Smith, Ramona M	5130 Booth Hill Rd	1.80	01N10E1101700	**8.08**					
			Terry Smith	5106 Booth Hill Rd	10.00	01N10E1101707	**44.90**					
			Terry Smith	5106 Booth Hill Rd	0.50	01N10E1101705	**2.25**					
				Subtotal:	**14.20**			14.20		14.20		
										103.60	**Christopher Ditch**	
Main Canal	WB	M04500	Katherine Green	3775 Pine Mont Dr	0.50	01N10E10D01900	**2.25**					
Pinemont Road			J. Franz Haun	3805 Pine Mont Dr	1.00	01N10E10D02100	**4.49**					
			Richard Snyder	3825 Pine Mont Dr	0.50	01N10E10D01902	**2.25**					
			Donald B. Wiley	3755 Pine Mont Dr	0.40	01N10E10D02200	**1.80**					
				Subtotal:	**2.40**			2.40				
Main Canal	Take Out	M04600	Tara Raylene Stewart	5044 Hillcrest Rd	1.00	01N10E10D01100	**4.49**					
				Subtotal:	**1.00**			1.00				
Main Canal	Take Out	M04700	James Gossen	5002 Hillcrest Rd	0.80	01N10E10D00901	**3.59**					
				Subtotal:	**0.80**			0.80				
Main Canal	Take Out 3"	M04800	Darryl Roberts	4977 Hillcrest Rd	1.80	01N10E10D00900	**8.08**					
			Katherine Joanne Lively	4977 Hillcrest Rd	3.20	01N10E10D00903	**14.37**					
			Gregory McCaw	4900 Hillcrest Rd	1.60	01N10E10D00708	**7.18**					
			Tamara Winston	4970 Hillcrest Rd	2.00	01N10E10D00701	**8.98**					
				Subtotal:	**8.60**			8.60				
Main Canal	Take Out 1 1/2"	M04900	Walter Coerper	4986 Hillcrest Rd	0.30	01N10E10D00902	**1.35**					
				Subtotal:	**0.30**			0.30				
Main Canal	Take Out 1 1/2"	M05000	Phil Metcalfe	4940 Hillcrest Rd	0.50	01N10E10D00800	**2.25**					
				Subtotal:	**0.50**			0.50				
Main Canal	Take Out 2"	M05100	Don G. Lainhart, Sr.	4960 Hwy 35	3.00	01N10E10D00500	**13.47**					
				Subtotal:	**3.00**			3.00				
Main Canal	Take Out	M05200	Cody E. Kellogg	4920 Hwy 35	0.60	01N10E10D00600	**2.69**					
				Subtotal:	**0.60**			0.60				
Main Canal	Take Out	M05300	Donald Gibbs	4959 Hillcrest Rd	1.00	01N10E1000906	**4.49**					
				Subtotal:	**1.00**			1.00				
Main Canal	Take Out	M05400	Brett Allen Douthit	4945 N Hillcrest Rd	1.50	01N10E1000905	**6.74**					
				Subtotal:	**1.50**			1.50				
Main Canal	4" Take Out	M05500	David Benton	4870 Hwy 35	2.22	01N10E1000903	**9.97**					
			Dale Milam	4890 Hwy 35	3.20	01N10E1000904	**14.37**					
			John J. Tolentino	4850 Hwy 35	2.20	01N10E1000900	**9.88**					
				Subtotal:	**7.62**			7.62				
Main Canal	Take Out	M05600	Dan R . Green	4820 Hwy 35	0.90	01N10E1000901	**4.04**					
				Subtotal:	**0.90**			0.90				

Main Canal

Canal/Pipeline	Diversion	Weir Valve #	Customer Name	Property Address	Irrigated Acres	Legal Description	GPM					
Main Canal	Take Out	M05700	David Chavez	4810 Hwy 35	0.40	01N10E1000703	**1.80**					
				Subtotal:	**0.40**			0.40				
Main Canal	Take Out	M05800										
Tavern Chute Line 42.80 ac.		M05800A	Heidi Sturdevant/Larry Dennis	4778 Hwy 35	1.10	01N10E1000401	**4.94**					
		M05800B	Everett W. Mooney	4776 Hwy 35	30.30	01N10E1001302	**136.05**					
			Everett W. Mooney	4776 Hwy 35	7.00	01N10E1000500	**31.43**					
			Everett W. Mooney	4776 Hwy 35	4.40	01N10E1001300	**19.76**					
				Subtotal:	**42.80**			42.80		**42.80**	**Tavern Chute Line**	
Main Canal	Take Out	M05900	Good Earth Foods, LLC	4780 Hwy 35	0.20	01N10E1000701	**0.90**					
				Subtotal:	**0.20**			0.20				
Main Canal	Take Out	M06000	Robert C. Train	4781 Hwy 35	0.70	01N10E1000201	**3.14**					
				Subtotal:	**0.70**			0.70				
Neal Creek Lateral		**M06100**		**Total Acres: 70.80**								
Industrial Water	Pump	M06101	Mt. Hood Forest Products	Upper Neal Creek Rd	5.00	01N10E1100601	**22.45**					
Industrial Water			Mt. Hood Forest Products	Upper Neal Creek Rd	6.20	01N10E1100300	**27.84**					
Industrial Water			Mt. Hood Forest Products	Hwy 35	3.80	01N10E1001000	**17.06**					
Industrial Water			Mt. Hood Forest Products	Upper Neal Creek Rd	6.20	01N10E1100400	**27.84**					
Industrial Water			Mt. Hood Forest Products	Hwy 35	2.00	01N10E1001100	**8.98**					
Industrial Water			Mt Hood Forest Products LLC	Upper Neal Creek Rd	3.00	01N10E1101302	**13.47**					
Industrial Water			Mt Hood Forest Products LLC		0.50	01N10E1100500	**2.25**					
Industrial Water			Mt Hood Forest Products LLC		1.00	01N10E1101200	**4.49**					
				Subtotal:	**27.70**			27.70	27.70			
Neal Creek Lateral	**Free Water**		Miller/Howard/Vieria/Guertin		**21.50**		**96.54**					
Once CLP completed 20.50 ac. available on the 1965 C.80928 to cover the free water				**Subtotal:**	**21.50**			21.50	21.50			
Also, 1 acre 1895 water right												
Neal Creek Lateral	Pump	M06103	Steve Richardson	5566 Neal Creek Rd	0.35	01N10E11BD01000	**1.57**					
				Subtotal:	**0.35**			0.35	0.35			
Neal Creek Lateral	Pump	M06104	Michael Lucas	5611 Neal Creek Rd	1.80	01N10E11BD01200	**8.08**					
				Subtotal:	**1.80**			1.80	1.80			
Neal Creek Lateral	Pump	M06105	Paul Berty	5564 Neal Creek Rd	1.05	01N10E11BD01100	**4.71**					
				Subtotal:	**1.05**			1.05	1.05			
Neal Creek Lateral	Pump	M06106	Lawrence Jacoby	5550 Neal Creek Rd	1.50	01N10E11BD00800	**6.74**					
				Subtotal:	**1.50**			1.50	1.50			
Neal Creek Lateral	Pump	M06107	Teri Karns	5561 Neal Creek Rd	2.10	01N10E11BD01300	**9.43**					

Main Canal

Canal/Pipeline	Diversion	Weir Valve #	Customer Name	Property Address	Irrigated Acres	Legal Description	GPM					
				Subtotal:	**2.10**			2.10	2.10			
Neal Creek Lateral	Pump	M06108	Randal Gray	5520 Neal Creek Rd	2.00	01N10E11BD00500	**8.98**					
				Subtotal:	**2.00**			2.00	2.00			
Neal Creek Lateral	Pump	M06109	Phillip L. Remer	5500 Neal Creek Rd	1.00	01N10E11BD00400	**4.49**					
				Subtotal:	**1.00**			1.00	1.00			
Neal Creek Lateral	Pump	M06110	Gerd B. Rausch	5460 Neal Creek Rd	1.30	01N10E11BD00100	**5.84**					
				Subtotal:	**1.30**			1.30	1.30			
Neal Creek Lateral	Pump	M06111	Kenneth Abercrombie	5475 Neal Creek Rd	2.50	01N10E11BD01400	**11.23**					
				Subtotal:	**2.50**			2.50	2.50			
Neal Creek Lateral	Pump	M06112	David W. Logsdon	4785 Booth Hill Rd	8.00	01N10E1100800	**35.92**					
				Subtotal:	**8.00**			8.00	8.00			
									70.80	**Neal Creek Lateral**		
								609.82	**Main Total**			

Main Canal

Canal/Pipeline	Diversion	Weir Valve #	Customer Name	Property Address	Irrigated Acres	Legal Description	GPM					
Main Canal	Acres											
Main Canal System	**609.97**											
Main Canal	272.12											
Gabriel Private Rights	3.00											
Fisher Line	27.55											
Brodehl Line	18.60											
Christopher Ditch	103.60											
Bowcut Pipeline	71.50											
Tavern Chute Line	42.80											
Neal Creek Lateral	70.80											

EASTSIDE CANAL

Canal/Pipeline	Diversion	Weir Valve #	Customer Name	Property Address	Irrigated Acres	Legal Description	GPM						
Central Lateral Pipeline													
Denton/Semple Line	**2" Valve**	**E01000A-D**		**Total Acres: 2.80**		**Main Valve**							
Denton/Semple Line	2" Valve	E01000A	Kevin Doherty - fire valve	4830 Neal Creek Rd	0.00	01N11E0600501	**0.00**						
			No Water Rights	**Subtotal:**	**0.00**								
Denton/Semple Line	2" Valve	E01000B	Kevin Doherty - fire valve	4830 Neal Creek Rd	0.00	01N11E0600600	**0.00**						
			No Water Rights	**Subtotal:**	**0.00**								
Denton/Semple Line	2" Valve	E01000C	James Denton	4834 Neal Creek Rd	2.70	01N11E0600501	**12.12**						
				Subtotal:	**2.70**			2.70		2.70			
Denton/Semple Line	2" Valve	E01000D	Julie Semple	4840 Neal Creek Rd	0.10	01N11E0600600	**0.45**						
				Subtotal:	**0.10**			0.10		0.10			
										2.80	**Denton/Semple Line**		
Eastside CLP 8" Pipeline	**8" Valve**	**E01200**		**Total Acres: 38.70**		**Main Valve**							
Eastside CLP 8" Pipeline	2" Valve	E01201	Dan Ball	2717 Swyers Dr	0.45	02N10E36DA00801	**2.02**						
				Subtotal:	**0.45**			0.45		0.45			
Eastside CLP 8" Pipeline	2" Valve	E01202	Dan Ball	2717 Swyers Dr	0.55	02N10E36DA00800	**2.47**						
				Subtotal:	**0.55**			0.55		0.55			
Eastside CLP 8" Pipeline	Valve	E01203	Eric R. Cederstam	2623 Swyers Dr	4.00	02N10E36DA01000	**17.96**						
			Donna A. DesRochers	2625 Swyers Dr	2.00	02N10E36DA01300	**8.98**						
				Subtotal:	**6.00**			6.00		6.00			
Eastside CLP 8" Pipeline	2" Valve	E01204	Melissa Braito	2731 Swyers Dr	1.10	02N10E36DB00100	**4.94**						
			Colleen Coleman	2729 Swyers Dr	2.00	02N10E36DB00300	**8.98**						
				Subtotal:	**3.10**			3.10		3.10			
Eastside CLP 8" Pipeline	2" Valve	E01205	Eric Rhodes	2725 Swyers Dr	0.20	02N10E36DA00700	**0.90**						
				Subtotal:	**0.20**			0.20		0.20			
Eastside CLP 8" Pipeline	2" Valve	E01206	Hans R. Woicke	2699 Swyers Dr	0.20	02N10E36DA00600	**0.90**						
				Subtotal:	**0.20**			0.20		0.20			
Eastside CLP 8" Pipeline	Valve	E01207	Celerino Valle-Guzman	2665 Swyers Dr	0.60	02N10E36DA00400	**2.69**						
			Gerald D. Wacker, Trs.	2627 Swyers Dr	1.00	02N10E36DA00900	**4.49**						
			Michael Winer	2621 Swyers Dr	1.00	02N10E36DA01200	**4.49**						
				Subtotal:	**2.60**			2.60		2.60			
Eastside CLP 8" Pipeline	2" Valve	E01208	George Kyle Haines	2685 Swyers Dr	0.60	02N10E36DA00500	**2.69**						
				Subtotal:	**0.60**			0.60		0.60			
Eastside CLP 8" Pipeline	Valve	E01209A-B											
	3" Valve	E01209A	Sally Moore	2624 Swyers Dr	16.00	02N10E3600800	**71.84**						
	3" Valve	E01209B	Eric R. Cederstam	2790 Swyers Dr	9.00	02N10E3600600	**40.41**						
				Subtotal:	**25.00**			25.00		25.00			
Eastside Canal	**WB 4**	**E01800**		**Total Acres: 3264.63**						**38.70**	**CLP 8" Pipeline**		

EASTSIDE CANAL

Canal/Pipeline	Diversion	Weir Valve #	Customer Name	Property Address	Irrigated Acres	Legal Description	GPM						
Eastside Canal	Take Out	E01900	D.H. Grasley	2805 Swyers Dr	0.50	02N10E3601002	**2.25**						
				Subtotal:	**0.50**			0.50			0.50		
Eastside Canal	WB	E02000	Ryan J. Dethman	2645 Swyers Dr	1.30	02N10E36DA00300	**5.84**						
			Ken Short	2616 Swyers Dr	1.00	02N10E36DA00100	**4.49**						
				Subtotal:	**2.30**			2.30			2.30		
Eastside Canal	WB	E02100	Gordon J Putnam	2820 Swyers Dr	11.00	02N10E3600500	**49.39**						
			Nigel Heinemann	2826 Swyers Dr	1.00	02N10E3601100	**4.49**						
				Subtotal:	**12.00**			12.00			12.00		
Eastside Canal	WB	E02200	Robert Oldfather	3615 Thomsen Rd	8.00	02N10E3600300	**35.92**						
Irrigating all land with EFID water not private well rights													
	2" Valve	E02200a	Fred Dominguez	3624 Thomsen Rd	2.00	02N10E3600301	**8.98**						
			Luis B. Dominguez	3620 Thomsen Rd	~~0.20~~	02N10E3600200	**0.90**						
		2014	*Dominguez Leased Instream .2 ac.*										
			Christopher Weekly	3630 Thomsen Rd	1.00	02N10E3600302	**4.49**						
				Subtotal:	~~**11.20**~~ ***11.00***			11.20			11.20		
Eastside Canal	WB	E02300	Kathryn D. Quinnett	3625 Thomsen Rd	0.20	02N10E3600400	**0.90**						
			Jake Morgan	3601 Thomsen Rd	7.50	02N10E3600100	**33.68**						
				Subtotal:	**7.70**			7.70			7.70		
Eastside Canal	WB	E02400	Patrick Hartford	3580 Thomsen Rd	2.80	02N10E2504300	**12.57**						
				Subtotal:	**2.80**			2.80			2.80		
Eastside Canal	Take Out	E02500	Juana Dominguez	3396 Thomsen Rd	0.65	02N10E2504201	**2.92**						
			Lavada Santavicca	3501 Thomsen Rd	0.70	02N10E2504200	**3.14**						
			Glenn L. Shultz	3460 Thomsen Rd	20.85	02N10E2504202	**93.62**						
				Subtotal:	**22.20**			22.20			22.20		
Eastside Canal	Take Out/ 6" Valve	E02600	Juanita Dominguez	3415 Thomsen Rd	0.30	02N11E3001800	**1.35**						
Tallman removed from line				**Subtotal:**	**0.30**			0.30			0.30		
Eastside Canal	WB	E02700	Michelle K. Tremblay	3395 Thomsen Rd	5.20	02N11E3001700	**23.35**						
				Subtotal:	**5.20**			5.20			5.20		
Eastside Canal	Take Out	E02800	Wilma R. Spengler	3375 Thomsen Rd	16.00	02N11E3001600	**71.84**						
				Subtotal:	**16.00**			16.00			16.00		
Eastside Canal	WB	E02900	Donald Lariza	2875 Fir Mtn Rd	21.80	02N11E3001200	**97.88**						
1 ac transferred from Storage Units				**Subtotal:**	**21.80**			21.80			21.80		
Eastside Canal	Take Out	E03000A	Anne Marie Ehrentraut	3320 Fir Mtn Rd	1.00	02N11E3000600	**4.49**						
				Subtotal:	**1.00**			1.00			1.00		
All from same WB?		E03000B	Barry Cantrell	3255 Thomsen Rd	1.00	02N11E3000600	**4.49**						
			Elk Mountain, LLC	3280 Fir Mtn Rd	16.00	02N11E3000700	**71.84**						
			Elk Mountain, LLC	3285 Thomsen Rd	21.00	02N11E3001302	**94.29**						
			Elk Mountain, LLC	3285 Thomsen Rd	9.80	02N11E3001500	**44.00**						

EASTSIDE CANAL

Canal/Pipeline	Diversion	Weir Valve #	Customer Name	Property Address	Irrigated Acres	Legal Description	GPM						
			Elk Mountain, LLC	3115 Fir Mtn Rd	25.10	02N11E3001501	**112.70**						
			Joel G. Spinhirne	3225 Thomsen Rd	0.40	02N11E3001301	**1.80**						
				Subtotal:	**73.30**			73.30			73.30		
Eastside Canal	Take Out	E03100	Sanford Sischo	3315 Fir Mtn Rd	0.60	02N11E3000300	**2.69**						
				Subtotal:	**0.60**			0.60			0.60		
			Paul Shelton	3285 Fir Mtn Rd	0.60	02N11E3000400	**2.69**						
				Subtotal:	**0.60**			0.60			0.60		
Eastside Canal	Take Out	E03200	Richard Gatherer	3235 Fir Mtn Rd	0.30	02N11E3000800	**1.35**						
			Ernest Laughlin	3350 Fir Mtn Rd	2.30	02N11E3000300	**10.33**						
			Loretta Laughlin	3269 Fir Mtn Rd	6.00	02N11E3000200	**26.94**						
				Subtotal:	**8.60**			8.60			8.60		
All from same TO?			Richard Gatherer	3235 Fir Mtn Rd	1.30	02N11E3000801	**5.84**						
				Subtotal:	**1.30**			1.30			1.30		
Rasmussen Line	**WB**	**E03300**		**Total Acres: 315.15**									
Rasmussen Line	WB	E03301A	Mark E. Crompton	3121 Fir Mtn Rd	2.00	02N11E3000901	**8.98**						
			Lois M. Neufeldt Trust	3119 Fir Mtn Rd	1.50	02N11E3000900	**6.74**						
		E03301B	Willis Family, Inc.	3125 Fir Mtn Rd	12.70	02N11E3000902	**57.02**						
				Subtotal:	**16.20**			16.20		16.20			
Rasmussen Line	WB	E03302	Mark Robertson	2955 Fir Mtn Rd	35.50	02N11E1903200	**159.40**						
				Subtotal:	**35.50**			35.50		35.50			
Rasmussen Line	4" Valve	E03303	Heirloom Orchards	2940 Fir Mtn Rd	48.50	02N11E1903000	**217.77**						
				Subtotal:	**48.50**			48.50		48.50			
Rasmussen Line	4" Valve	E03304	Lynn H. Rasmussen, Jr.	3020 Thomsen Rd	16.90	02N10E2404600	**75.88**						
			James M. Edwards	3020 Thomsen Rd	1.50	02N10E2404601	**6.74**						
			Steve Thompson	3020 Thomsen Rd	0.90	02N10E2404602	**4.04**						
				Subtotal:	**19.30**			19.30		19.30			
Rasmussen Line	Valve	E03305	Edwin W. DeBoard	2960 Thomsen Rd	2.80	02N10E2404500	**12.57**						
				Subtotal:	**2.80**			2.80		2.80			
Rasmussen Line	Valve	E03306	Opportunity Connections	2940 Thomsen Rd	2.50	02N10E2404501	**11.23**						
				Subtotal:	**2.50**			2.50		2.50			
Rasmussen Line	Valve	E03307	Viewmont Orchards, LLC	2890 Thomsen Rd	23.75	02N10E2404403	**106.64**						
				Subtotal:	**23.75**			23.75		23.75			
Rasmussen Line	Valve	E03308	Viewmont Orchards, LLC	2880 Thomsen Rd	1.70	02N10E2404401	**7.63**						
				Subtotal:	**1.70**			1.70		1.70			
Rasmussen Line	Valve	E03309	David A. Durham	2600 Fir Mtn Rd	3.00	02N10E2404404	**13.47**						
				Subtotal:	**3.00**			3.00		3.00			

EASTSIDE CANAL

Canal/Pipeline	Diversion	Weir Valve #	Customer Name	Property Address	Irrigated Acres	Legal Description	GPM						
Rasmussen Line	Valve	E03310	Michael S. Flood	2606 Fir Mtn Rd	1.60	02N10E2404400	**7.18**						
				Subtotal:	**1.60**			1.60		1.60			
Rasmussen Line	3" Valve	E03311	Dale O. Byers	2766 Eastside Rd	8.70	02N11E1901900	**39.06**						
				Subtotal:	**8.70**			8.70		8.70			
Rasmussen Line	3" Valve	E03312	Donald L. Herman	2701 Glass Dr	9.55	02N10E2400300	**42.88**						
				Subtotal:	**9.55**			9.55		9.55			
Rasmussen Line	2" Valve	E03313	Viewmont Orchards, LLC	2587 Fir Mtn Rd	3.80	02N10E2400800	**17.06**						
				Subtotal:	**3.80**			3.80		3.80			
Rasmussen Line	2" Valve	E03314	Ernest Laughlin	2581 Fir Mtn Rd	4.40	02N10E2400801	**19.76**						
				Subtotal:	**4.40**			4.40		4.40			
Rasmussen Line	3" Valve	E03315	Daniel O. Clark	2771 Glass Dr	8.40	02N10E2400400	**37.72**						
			Daniel O. Clark	2805 Glass Dr	1.35	02N10E2400700	**6.06**						
				Subtotal:	**9.75**			9.75		9.75			
Rasmussen Line	2" Valve	E03316	John S. Kiss	2791 Glass Dr	2.30	02N10E2400500	**10.33**						
				Subtotal:	**2.30**			2.30		2.30			
Rasmussen Line	1" Valve thru Kiss	E03317	Leopoldo Torres	2811 Glass Dr	0.60	02N10E2400600	**2.69**						
				Subtotal:	**0.60**			0.60		0.60			
Rasmussen Line	2" Valve	E03318	Raymond A. Wilhite	3316 Thomsen Rd	4.00	02N10E2500502	**17.96**						
				Subtotal:	**4.00**			4.00		4.00			
Rasmussen Line	4" Valve	E03319	Moore Orchards, Inc.	2860 Kingdon Dr	30.60	02N10E2500100	**137.39**						
				Subtotal:	**30.60**			30.60		30.60			
Rasmussen Line	3" Valve	E03320	Mary Ann Wright	2438 Fir Mtn Rd	13.60	02N10E2403800	**61.06**						
				Subtotal:	**13.60**			13.60		13.60			
Rasmussen Line	2" to 1" Valve	E03321	Alan Bailey	2500 Fir Mtn Rd	1.00	02N10E2404500	**4.49**						
				Subtotal:	**1.00**			1.00		1.00			
Rasmussen Line	3" Valve	E03322	Lawrence M. Moore	2540 Fir Mtn Rd	10.80	02N10E2404300	**48.49**						
				Subtotal:	**10.80**			10.80		10.80			
Rasmussen Line	3" Valve	E03323	Michael Roulette	2585 Fir Mtn Rd	19.90	02N10E2404100	**89.35**						
				Subtotal:	**19.90**			19.90		19.90			
Rasmussen Line	4" Valve	E03324	Robert C. Peterson	2831 Glass Dr	31.30	02N10E2400900	**140.54**						
				Subtotal:	**31.30**			31.30		31.30			
Rasmussen Line	WB	E03325	Moore Orchards, Inc.	2850 Kingdon Dr	10.00	02N10E2403700	**44.90**						
				Subtotal:	**10.00**			10.00		10.00			
										315.15	**Rasmussen Line**		

EASTSIDE CANAL

Canal/Pipeline	Diversion	Weir Valve #	Customer Name	Property Address	Irrigated Acres	Legal Description	GPM						
Eastside Canal	WB	E03400	Shane Gazan	2925 Fir Mtn Rd	11.00	02N11E1903400	**49.39**						
				Subtotal:	**11.00**			11.00			11.00		
Eastside Canal	WB	E03500	Roy E. Hillmick	2915 Fir Mtn Rd	0.90	02N11E1902500	**4.04**						
			George M. Swyers	2921 Fir Mtn Rd	24.00	02N11E1903300	**107.76**						
				Subtotal:	**24.90**			24.90			24.90		
Eastside Canal	WB	E03600	Pine Grove Orchards	2875 Fir Mtn Rd	73.90	02N11E1900600	**331.81**						
			Todd Wells	2600 Wells Dr	1.10	02N11E1902700	**4.94**						
			Pedro Galvan	2407 Wells Dr	2.70	02N11E1900601	**12.12**						
			Patricia A. Rowan	2900 Fir Mtn Rd	0.90	02N11E1902900	**4.04**						
			Edwin DeBoard	2805 Thomsen Rd	0.70	02N11E1902600	**3.14**						
			Pine Grove Orchards	2885 Thomsen Rd	15.50	02N11E19002601							
				Subtotal:	**94.80**			94.80			94.80		
Eastside Canal	WB	E03700	E. Robert Wells	2405 Wells Dr	4.20	02N11E1903500	**18.86**						
				Subtotal:	**4.20**			4.20			4.20		
Not sure where this take out is?			E. Robert Wells	2401 Wells Dr	0.30	02N11E1900500	**1.35**						
				Subtotal:	**0.30**			0.30			0.30		
Mathieson Line	**WB**	**E03800**		**Total Acres: 72.20**									
Mathieson Line	WB	E03801	Viewmont Orchards, LLC	2290 Wells Dr	3.00	02N11E1900300	**13.47**						
			Viewmont Orchards, LLC	Wells Dr	19.20	02N11E1900400	**86.21**						
			Viewmont Orchards, LLC	2701 Eastside Rd	23.30	02N11E1901700	**104.62**						
			Wells, W. Gowlan, Trust	2801 Fir Mtn Rd	15.60	02N11E1902000	**70.04**						
				Subtotal:	**61.10**			61.10		61.10			
Mathieson Line	Valve	E03802	Pine Grove Orchards	2875 Fir Mtn Rd	10.10	02N11E1900600							
			portion N of Wells Drive	**Subtotal:**	**10.10**			10.10		10.10			
Mathieson Line	2" Valve	E03803	Bernard L. Wells	2600 Wells Dr	1.00	02N11E1902000	**4.49**						
				Subtotal:	**1.00**			1.00		1.00			
										72.20	**Mathieson Line**		
Eastside Canal	WB	E03900	Viewmont Orchards, LLC	2255 Wells Dr	10.10	02N11E1900200	**45.35**						
			Viewmont Orchards, LLC	2308 Wells Dr	11.10	02N11E1900800	**49.84**						
			Viewmont Orchards, LLC	2302 Wells Dr	9.50	02N11E1900900	**42.66**						
			Wells, W. Gowlan, Trust	1712 Wells Dr	19.20	02N11E1902100	**86.21**						
				Subtotal:	**49.90**			49.90			49.90		
Eastside Canal	Take Out	E04000	Robert M. Ellis	2205 Wells Dr	2.00	02N11E1900102	**8.98**						
				Subtotal:	**2.00**			2.00			2.00		
Crag Rat Line	**WB**	**E04100**		**Total Acres: 127.30**									
Crag Rat Line	WB	E04101	La La Properties, LLC	2445 Eastside Rd	0.50	02N11E1802300	**2.25**						
			Viewmont Orchards, LLC	Eastside Rd	4.00	02N11E1802200	**17.96**						
			Viewmont Orchards, LLC	2505 Eastside Rd	10.40	02N11E1802700	**46.70**						
			Viewmont Orchards, LLC	Eastside Rd	9.50	02N11E1901200	**42.66**						
			Viewmont Orchards, LLC	2529 Eastside Rd	20.00	02N11E1901300	**89.80**						
				Subtotal:	**44.40**			44.40		44.40			

EASTSIDE CANAL

Canal/Pipeline	Diversion	Weir Valve #	Customer Name	Property Address	Irrigated Acres	Legal Description	GPM						
Crag Rat Line	Valve	E04103A	Viewmont Orchards, LLC	2595 Eastside Rd	8.30	02N11E1901501	**37.27**						
			Viewmont Orchards, LLC	2725 Eastside Rd	1.00	02N11E1901800	**4.49**						
			Marjorie J. Wells Trust	Glass Dr	9.90	02N10E2400202	**44.45**						
			Marjorie J. Wells Trust	2710 Glass Dr	8.00	02N11E1901500	**35.92**						
	2" Valve	E04103B	Donna J. Stair	2780 Glass Dr	4.20	02N10E2400201	**18.86**						
				Subtotal:	**31.40**			31.40		31.40			
Crag Rat Line	Valve	E04104	Steve Olsen	2560 Eastside Rd	2.30	02N10E2400101	**10.33**						
			Steve Olsen	2560 Eastside Rd	2.60	02N11E1901402	**11.67**						
			Thomas Penchoen	2556 Eastside Rd	1.00	02N11E1901401	**4.49**						
				Subtotal:	**5.90**			5.90		5.90			
Crag Rat Line	Valve	E04105	Swyers Orchards, Inc.	2540 Eastside Rd	21.70	02N10E2400100	**97.43**						
			Swyers Orchards, Inc.	2000 Eastside Rd	12.90	02N10E2401104	**57.92**						
	4" Valve	E04105a	David Porter	2850 Glass Dr	2.00	02N10E2401103	**8.98**						
			Gerry Marshall	2876 Glass Dr	0.90	02N10E2401101	**4.04**						
			Noel W. Neal	2814 Glass Dr	3.60	02N10E2401100	**16.16**						
		E04105b	Paul Oates Dethman	2575 Hwy 35	4.50	02N10E2401105	**20.21**						
				Subtotal:	**45.60**			45.60		45.60			
										127.30	**Crag Rat Line**		
Eastside Canal	WB	E04200	Lage Orchards, Inc.	1708 Wells Dr	53.10	02N11E1901100	**238.42**						
			Lage Orchards, Inc.	2575 Eastside Rd	3.90	02N11E1901600	**17.51**						
				Subtotal:	**57.00**			57.00			57.00		
Eastside Canal	WB	E04300	David P. Waller	2143 Wells Dr	7.55	02N11E1900101	**33.90**						
			Wells, W. Gowlan, Trust	2155 Wells Dr	5.00	02N11E1900100	**22.45**						
			Wells, W. Gowlan, Trust	Wells Dr	1.00	02N11E1901000	**4.49**						
				Subtotal:	**13.55**			13.55			13.55		
??? Same as E 04300			Michael Peterson-Love	2199 Maggie Lane	2.00	02N11E2001300	**8.98**						
				Subtotal:	**2.00**			2.00			2.00		
Eastside Canal	TakeOut	E04400	La La Properties, LLC	2280 Eastside Rd	1.00	02N11E1803900	**4.49**						
				Subtotal:	**1.00**			1.00			1.00		
Eastside Canal	WB	E04500	Wells, W. Gowlan, Trust	1802 Wells Dr	28.50	02N11E1803100	**127.97**						
				Subtotal:	**28.50**			28.50			28.50		
Eastside Canal	WB	E04600	Viewmont Orchards, LLC	2075 Wells Dr	19.40	02N11E1803700	**87.11**						
			Viewmont Orchards, LLC	2093 Wells Dr	16.00	02N11E1803800	**71.84**						
				Subtotal:	**35.40**			35.40			35.40		
Eastside Canal	WB	E04700	Gary W. Wells	1880 Wells Dr	18.60	02N11E1803200	**83.51**						
				Subtotal:	**18.60**			18.60			18.60		

EASTSIDE CANAL

Canal/Pipeline	Diversion	Weir Valve #	Customer Name	Property Address	Irrigated Acres	Legal Description	GPM						
Eastside Canal	WB	E04800	Viewmont Orchards, LLC	2025 Wells Dr	18.25	02N11E1803600	**81.94**						
			Gary Wilson Wells	1955 Wells Dr	20.00	02N11E1803400	**89.80**						
				Subtotal:	**38.25**			38.25			38.25		
Loopline	**WB**	**E04900**		**Total Acres: 791.20**									
Loopline	2" Valve	E04901	Delmar L. Swyers	1911 Wells Dr	8.40	02N11E1803300	**37.72**						
			Delmar L. Swyers	1911 Wells Dr	0.80	02N11E1803301	**3.59**						
			Delmar L. Swyers	1911 Wells Dr	0.30	02N11E1803302	**1.35**						
				Subtotal:	**9.50**			9.50		9.50			
Loopline	3" Valve	E04902	Lage Orchards, Inc.	2280 Eastside Rd	13.80	02N11E1802800	**61.96**						
			Lage Orchards, Inc.	2280 Eastside Rd	15.90	02N11E1802900	**71.39**						
			Lage Orchards, Inc.	1800 Wells Dr	5.70	02N11E1803000	**25.59**						
				Subtotal:	**35.40**			35.40		35.40			
Loopline	WB	E04903A	Athalie M. Lage	2345 Eastside Rd	0.40	02N11E1801701	**1.80**						
			Lage Orchards, Inc.	1905 Mason Rd	36.50	02N11E1801300	**163.89**						
			Lage Orchards, Inc.	2220 Eastside Rd	37.20	02N11E1801500	**167.03**						
			Lage Orchards, Inc.	2275 Eastside Rd	16.50	02N11E1801600	**74.09**						
			Lage Orchards, Inc.	2280 Eastside Rd	27.00	02N11E1801700	**121.23**						
				Subtotal:	**117.60**			117.60		117.60			
		E04903B	Willis Family, Inc.	2345 Mason Rd	20.10	02N10E13D00100	**90.25**						
			Willis Family, Inc.	2680 Van Horn Dr	6.95	02N10E13D00300	**31.21**						
			Willis Family, Inc.	2755 Van Horn Dr	18.00	02N10E13D01800	**80.82**						
			Willis Family, Inc.	2681 Van Horn Dr	8.80	02N10E13D02000	**39.51**						
			Willis Family, Inc.	2765 Van Horn Dr	13.75	02N10E13D02200	**61.74**						
			Willis Family, Inc.	1945 Mason Rd	1.60	02N11E1801400	**7.18**						
			Willis Family, Inc.	2620 Van Horn Dr	32.30	02N11E1801800	**145.03**						
			Willis Family, Inc.	2385 Eastside Rd	1.50	02N11E1801900	**6.74**						
			Willis Family, Inc.	2545 Van Horn Dr	7.50	02N11E1802400	**33.68**						
			Willis Family, Inc.	2475 Van Horn Dr	5.45	02N11E1802600	**24.47**						
Willis Private Line			Pine Grove Butte Cemetery	2687 Van Horn Dr	4.85	02N10E13D02100	**21.78**						
Willis Private Line			David Ryan	2680 Van Horn Dr	20.55	02N10E13D00301	**92.27**						
Willis Private Line	2" Valve	E04904	Hood River Co. School Dist.	Pine Grove School	1.60	02N11E1802000	**7.18**						
				Subtotal:	**142.95**			142.95		142.95			
Loopline	4" Valve	E04905	Faith C. Ackerman	2175 Mason Rd	21.70	02N10E1300300	**97.43**						
				Subtotal:	**21.70**			21.70		21.70			
Loopline	2" Valve	E04906	James L. Moses	2385 Mason Rd	0.70	02N10E13D00600	**3.14**						
			James D. Miller	2375 Mason Rd	0.35	02N10E13D00500	**1.57**						
			David F. Turner	2335 Mason Rd	0.80	02N10E13D00400	**3.59**						
				Subtotal:	**1.85**			1.85		1.85			
Loopline	4" Valve	E04907	Kennedy Brothers, LLC	2265 Hwy 35	30.95	02N10E1300500	**138.97**						
				Subtotal:	**30.95**			30.95		30.95			

EASTSIDE CANAL

Canal/Pipeline	Diversion	Weir Valve #	Customer Name	Property Address	Irrigated Acres	Legal Description	GPM						
Loopline	4" Valve	E04908	Van Horn Vineyards, LLC	2365 Hwy 35	19.85	02N10E13D00900	**89.13**						
				Subtotal:	**19.85**			19.85		19.85			
Same valve??			Santos A. Mariscal	2846 Van Horn Dr	0.10	02N10E13D00800	**0.45**						
				Subtotal:	**0.10**			0.10		0.10			
Loopline	4" Valve	E04909	Rodney Blake	2470 Hwy 35	0.40	02N10E1302700	**1.80**						
			The Fruit Company	2885 Van Horn Dr	0.60	02N10E13D01204	**2.69**						
			The Fruit Company	2885 Van Horn Dr	2.50	02N10E13D01201	**11.23**						
			Dominguez Family Enterprises	2885 Van Horn Dr	~~2.00~~	02N10E13D01203	**8.98**						
			Dominguez Family Enterprises	2885 Van Horn Dr	~~0.30~~	02N10E13D01401	**1.35**						
		2014	*Dominguez Leased Instream 1.8 ac.*		***0.50***		**2.25**						
			William A. Mohr	2919 Dethman Ridge Dr	1.60	02N10E1302900	**7.18**						
			William A. Mohr	2935 Dethman Ridge Dr	2.40	02N10E2401400	**10.78**						
			Kenneth S. Morikado	2480 Hwy 35	1.50	02N10E1302800	**6.74**						
			Wy'East Fire District	2900 Van Horn Dr	0.20	02N10E13D01100	**0.90**						
			Webster Orchards	2915 Van Horn Dr	9.95	02N10E13D01200	**44.68**						
				Subtotal:	**~~21.45~~**	***19.65***		21.45		21.45			
Loopline	2" & 4" Valve	E04910	Opal L. DeBoard	2369 Hwy 35	1.00	02N10E1301900	**4.49**						
			Heirloom Orchards	2122 Hwy 35	0.30	02N10E1301501	**1.35**						
			Heirloom Orchards	2380 Hwy 35	107.65	02N10E1301500	**483.35**						
			Heirloom Orchards	2680 Van Horn Dr	9.30	02N10E1301800	**41.76**						
			Heirloom Orchards	2420 Hwy 35	6.80	02N10E1302100	**30.53**						
			Heirloom Orchards		3.20	02N10E1302401	**14.37**						
			Leslie R. Labbe	2120 Hwy 35	2.80	02N10E1301400	**12.57**						
			Amos Phillips	2394 Hwy 35	0.90	02N10E1302000	**4.04**						
				Subtotal:	**131.95**			131.95		131.95			
Loopline	3" Valve	E04911	Goe, Donald L. Trust	2180 Hwy 35	9.60	02N10E1301600	**43.10**						
			Goe, Donald L. Trust	2290 Hwy 35	10.95	02N10E1301700	**49.17**						
				Subtotal:	**20.55**			20.55		20.55			
Loopline	4" Valve	E04912	Willis Family, Inc.	2162 Mason Rd	7.55	02N10E1300600	**33.90**						
			Willis Family, Inc.	2166 Mason Rd	10.15	02N10E1300700	**45.57**						
				Subtotal:	**17.70**			17.70		17.70			
Loopline	4" Valve	E04913	Michael Saltzman	2158 Mason Rd	0.80	02N10E1300801	**3.59**						
			Willis Family, Inc.	2160 Mason Rd	16.60	02N10E1300800	**74.53**						
			Willis Family, Inc.	2025 Hwy 35	10.00	02N10E1300900	**44.90**						
				Subtotal:	**27.40**			27.40		27.40			
Loopline	4" Valve	E04914	Willis Family, Inc.	2115 Hwy 35	18.60	02N10E1301000	**83.51**						
			Willis Family, Inc.	2755 Paasch Dr	0.80	02N10E1203401	**3.59**						
				Subtotal:	**19.40**			19.40		19.40			
Loopline	2" Valve	E04915	Dianne Hayes	2065 Hwy 35	0.20	02N10E1301100	**0.90**						
				Subtotal:	**0.20**			0.20		0.20			

EASTSIDE CANAL

Canal/Pipeline	Diversion	Weir Valve #	Customer Name	Property Address	Irrigated Acres	Legal Description	GPM						
Loopline	6" Valve	E04916	Bickford Orchards, Inc.	Hwy 35	2.80	02N10E1202800	**12.57**						
			Bickford Orchards, Inc.	1920 Hwy 35	29.60	02N10E1203000	**132.90**						
			Bickford Orchards, Inc.	1930 Hwy 35	37.10	02N10E1301300	**166.58**						
				Subtotal:	**69.50**			69.50		69.50			
Loopline	4" Valve	E04917	Viewmont Orchards, LLC	1860 Hwy 35	25.20	02N10E1202700	**113.15**						
				Subtotal:	**25.20**			25.20		25.20			
Loopline	1" Valve	E04918	Grant R. Mooney	1868 Hwy 35	0.20	02N10E1202900	**0.90**						
				Subtotal:	**0.20**			0.20		0.20			
Loopline	4" Valve	E04919	Parks Orchards, Inc.	1901 Hwy 35	18.45	02N10E1203100	**82.84**						
			Swyers Orchards, Inc.	2855 Paasch Dr	17.70	02N10E1203201	**79.47**						
			Webster Orchards	2867 Paasch Dr	0.50	02N10E1203200	**2.25**						
				Subtotal:	**36.65**			36.65		36.65			
Loopline	4" Valve	E04920	Joe R. Holt	2885 Rainbow Dr	1.60	02N10E1200900	**7.18**						
			Richard H. Fox	2885 Rainbow Dr	12.00	02N10E1200903	**53.88**						
			Joe R. Holt	2890 Rainbow Dr	2.00	02N10E1200901	**8.98**						
			Robert McCullough	2870 Rainbow Dr	1.80	02N10E1200902	**8.08**						
			Patricia A. Hutson	2885 Paasch Dr	0.10	02N10E1200802	**0.45**						
			Viewmont Orchards, LLC	2998 Paasch Dr	8.70	02N10E1200700	**39.06**						
			Viewmont Orchards, LLC	1775 Hwy 35	6.00	02N10E1200800	**26.94**						
			Viewmont Orchards, LLC	2895 Rainbow Dr	2.50	02N10E1200801	**11.23**						
				Subtotal:	**34.70**			34.70		34.70			
Loopline	4" Valve	E04921	John W. Jorgensen	2880 Paasch Dr	6.40	02N10E1200500	**28.74**						
				Subtotal:	**6.40**			6.40		6.40			
										791.20	**Loopline**		
Eastside Canal	TakeOut	E05000	Lage Orchards, Inc.	2225 Eastside Rd	13.70	02N11E1800600	**61.51**						
				Subtotal:	**13.70**			13.70			13.70		
Eastside Canal	WB	E05100	Viewmont Orchards, LLC	1921 Wells Dr	15.00	02N11E1800400	**67.35**						
			Viewmont Orchards, LLC	1965 Wells Dr	15.20	02N11E1800500	**68.25**						
			Viewmont Orchards, LLC	1975 Wells Dr	20.00	02N11E1803500	**89.80**						
				Subtotal:	**50.20**			50.20			50.20		
Eastside Canal	WB	E05200	La La Properties, LLC	2375 Mohr Dr	12.70	02N11E1800300	**57.02**						
			La La Properties, LLC	2360 Mohr Dr	7.85	02N11E1800200	**35.25**						
				Subtotal:	**20.55**			20.55			20.55		
Eastside Canal	WB	E05300	La La Properties, LLC	Mohr Dr	52.00	02N11E1800100	**233.48**						
				Subtotal:	**52.00**			52.00			52.00		
Eastside Canal	WB	E05400	La La Properties, LLC	2125 Eastside Rd	1.80	02N11E1800700	**8.08**						
			Lage Orchards, Inc.	2095 Eastside Rd	28.00	02N11E1800800	**125.72**						
			Lage Orchards, Inc.	2280 Eastside Rd	2.00	02N11E1800900	**8.98**						
				Subtotal:	**31.80**			31.80			31.80		

EASTSIDE CANAL

Canal/Pipeline	Diversion	Weir Valve #	Customer Name	Property Address	Irrigated Acres	Legal Description	GPM						
Dethman Swyers Line	**WB**			**Total Acres: 145.05**									
Dethman Swyers Line		E05500	Dennis W. Bonney Rev. Living	2380 Mohr Dr	1.90	02N11E1800201	**8.53**						
			Dethman Orchards, Inc.	1990 Eastside Rd	15.00	02N10E1203400	**67.35**						
			Dethman Orchards, Inc.	1990 Eastside Rd	22.20	02N11E0702800	**99.68**						
			La La Properties, LLC	1900 Eastside Rd	3.70	02N11E0702400	**16.61**						
			La La Properties, LLC	1920 Eastside Rd	5.00	02N11E0702500	**22.45**						
			Gary W. Simpson	2595 Paasch Dr	1.00	02N11E0702300	**4.49**						
			Melissa J. Wittenberg	2651 Paasch Dr	4.80	02N11E0702600	**21.55**						
			Swyers Orchards, Inc.	2000 Eastside Rd	20.30	02N11E1801000	**91.15**						
			Swyers Orchards, Inc.	2000 Eastside Rd	24.10	02N11E1801200	**108.21**						
			Viewmont Orchards, LLC	2118 Mason Rd	25.00	02N10E1300100	**112.25**						
			Viewmont Orchards, LLC	2124 Mason Rd	0.25	02N10E1300200	**1.12**						
			Yamaki Orchards, Inc.	2685 Paasch Dr	17.00	02N10E1203300	**76.33**						
			Richard L. Yarington	2625 Paasch Dr	4.80	02N11E0702700	**21.55**						
				Subtotal:	**145.05**			145.05		**145.05**	**Dethman Swyers Line**		
Eastside Canal	WB	E05600	Moore Orchards, Inc.	2399 Lacey Dr	85.40	02N11E0700700	**383.45**						
			Part of 140.90 wr ac.	**Subtotal:**	**85.40**			85.40			85.40		
Eastside Canal	WB	E05700	Patrick A. Moore	2205 Mohr Dr	12.40	02N11E0703000	**55.68**						
			Moore Orchards, Inc.	2290 Mohr Dr	2.00	02N11E0703003	**8.98**						
				Subtotal:	**14.40**			14.40			14.40		
Paasch Line	**WB**	**E05800**		**Total Acres: 170.55**									
Paasch Line	WB	E05801	V. Robert Thomsen	1775 Eastside Rd	19.55	02N11E0701700	**87.78**						
				Subtotal:	**19.55**			19.55		19.55			
Paasch Line	WB	E05801	Yamaki Orchards, Inc.	1771 Eastside Rd	10.20	02N11E0701800	**45.80**						
				Subtotal:	**10.20**			10.20		10.20			
Paasch Line	WB	E05802	Laraway & Sons, Inc.	1830 Eastside Rd	33.20	02N11E0702100	**149.07**						
				Subtotal:	**33.20**			33.20		33.20			
Paasch Line	Valve	E05802	David A. Paasch	2700 Paasch Dr	71.50	02N10E1200400	**323.28**						
				Subtotal:	**71.50**			71.50		71.50			
Paasch Line	Valve	E05802	Richard H. Fox	2700 Blossom Hill Dr	36.10	02N10E1200300	**162.09**						
				Subtotal:	**36.10**			36.10		36.10			
										170.55	**Paasch Line**		
Eastside Canal	WB	E05900	Patrick A. Moore	Lacey Dr	5.40	02N11E0703002	**24.25**						
			Moore Orchards, Inc.	2399 Lacey Dr	55.50	02N11E0700700	**249.20**						
			Part of 140.90 wr ac.	**Subtotal:**	**60.90**			60.90			60.90		
Eastside Canal	WB	E06000	Bickford Orchards, Inc.	1636 Eastside Rd	20.20	02N11E0701600	**90.70**						
Kelly Line			Laraway & Sons, Inc.	1720 Eastside Rd	4.85	02N11E0702000	**21.78**						
				Subtotal:	**25.05**			25.05		**25.05**	**Kelly Line**		
Eastside Canal	WB	E06100	Moore Orchards, Inc.	2401 Stricker Dr	22.60	02N11E0700500	**101.47**						
				Subtotal:	**22.60**			22.60			22.60		

EASTSIDE CANAL

Canal/Pipeline	Diversion	Weir Valve #	Customer Name	Property Address	Irrigated Acres	Legal Description	GPM						
Eastside Canal	WB	E06200	Moore Orchards, Inc.	2355 Lacey Dr	13.00	02N11E0700600	**58.37**						
			Moore Orchards, Inc.	2540 Lacey Dr	5.90	02N11E0700800	**26.49**						
			Moore Orchards, Inc.	2580 Lacey Dr	5.30	02N11E0700900	**23.80**						
				Subtotal:	**24.20**			24.20			24.20		
											944.55	**Eastside Canal**	
Thomsen Line	**WB**	**E06300**		**Total Acres: 151.10**									
Thomsen Line	Valve	E06301	Steven K. Martin	1575 Hwy 35	0.40	02N10E1200200	**1.80**						
			Steven L. Leslie	1465 Hwy 35	6.00	02N10E0101400	**26.94**						
			Swyers Orchards, Inc.	1555 Hwy 35	11.00	02N10E1200201	**49.39**						
				Subtotal:	**17.40**			17.40		17.40			
Thomsen Line	Valve	E06302	Davis, Carroll L., Trustee	1630 Eastside Rd	1.00	02N11E0701501	**4.49**						
			V. Robert Thomsen	1595 Eastside Rd	48.50	02N11E0701000	**217.77**						
			V. Robert Thomsen	1595 Eastside Rd	20.80	02N11E0701500	**93.39**						
			V. Robert Thomsen	1480 Eastside Rd	18.10	02N11E0701300	**81.27**						
				Subtotal:	**88.40**			88.40		88.40			
Thomsen Line	Valve	E06303	Laraway & Sons, Inc.	1485 Eastside Rd	11.40	02N11E0701100	**51.19**						
			Laraway & Sons, Inc.	1580 Eastside Rd	15.20	02N11E0701400	**68.25**						
				Subtotal:	**26.60**			26.60		26.60			
Thomsen Line	WB	E06304	Gregory B. Borton	2680 Blossom Hill Dr	2.00	02N10E0101900	**8.98**						
			Fred D. Duckwall	2600 Blossom Hill Dr	2.50	02N11E0602501	**11.23**						
			Richard H. Fox	2740 Blossom Hill Dr	8.00	02N10E1200100	**35.92**						
			Clifford Francis	2660 Blossom Hill Dr	3.20	02N11E0602502	**14.37**						
			Larry L. Hilton	2650 Blossom Hill Dr	3.00	02N10E0101901	**13.47**						
				Subtotal:	**18.70**			18.70		18.70			
										151.10	**Thomsen Line**		
Nafsinger Line	**4" Valve**	**E06500**		**Total Acres: 22.30**									
Nafsinger Line	4" Valve	E06501	Allen Moore	2255 Old Dalles Rd	16.80	02N11E0700100	**75.43**						
				Subtotal:	**16.80**			16.80		16.80			
Nafsinger Line	2" Valve	E06502	Michelle B. Rabin	2230 Old Dalles Rd	1.50	02N11E0700200	**6.74**						
				Subtotal:	**1.50**			1.50		1.50			
Nafsinger Line	2" Valve	E06503	Linda Kremin	2290 Old Dalles Rd	1.00	02N11E0700201	**4.49**						
				Subtotal:	**1.00**			1.00		1.00			
Nafsinger Line	2" Valve	E06504	Samuel G. Taylor, IV	2330 Old Dalles Rd	1.00	02N11E0700202	**4.49**						
				Subtotal:	**1.00**			1.00		1.00			
Nafsinger Line	2" Valve	E06505	Nafsinger, Phyllis A., Living Tr	2340 Old Dalles Rd	2.00	02N11E0700300	**8.98**						
				Subtotal:	**2.00**			2.00		2.00			
										22.30	**Nafsinger Line**		
Whiskey Creek Diversion	**WB**	**E06600**		**Total Acres: 499.33**	**includes Ewald, Lariza, Panorama Pt.,**								
				Hukari, Lower Highline, Tiffany, Sheppard									
Whiskey Creek Pipeline	2" Valve	E06601	Mathew L. Peters	2365 Old Dalles Rd	2.40	02N11E0700501	**10.78**						
				Subtotal:	**2.40**			2.40		2.40			

EASTSIDE CANAL

Canal/Pipeline	Diversion	Weir Valve #	Customer Name	Property Address	Irrigated Acres	Legal Description	GPM						
Whiskey Creek Pipeline	4" Valve	E06602	Laraway & Sons, Inc.	1435 Eastside Rd	14.40	02N11E0602700	**64.66**						
			Laraway & Sons, Inc.	2371 Old Dalles Rd	10.40	02N11E0701200	**46.70**						
				Subtotal:	**24.80**			24.80		24.80			
Whiskey Creek Pipeline	4" Valve	E06603	Corrado, Vita C., Trust	2360 Old Dalles Rd	0.20	02N11E0603400	**0.90**						
			Corrado, Vita C., Trust	2350 Old Dalles Rd	4.00	02N11E0700400	**17.96**						
			ZMF Properties, LLC	2390 Old Dalles Rd	0.20	02N11E0603300	**0.90**						
				Subtotal:	**4.40**			4.40		4.40			
Whiskey Creek Pipeline	4" Valve	E06604	Douglas Massingill	2440 Old Dalles Rd	1.00	02N11E0603200	**4.49**						
			V. Robert Thomsen	2450 Old Dalles Rd	11.20	02N11E0603100	**50.29**						
			Marcia M. Wuest	2460 Old Dalles Rd	3.00	02N11E0602900	**13.47**						
			Marcia M. Wuest	2480 Old Dalles Rd	0.30	02N11E0603000	**1.35**						
				Subtotal:	**15.50**			15.50		15.50			
Whiskey Creek Pipeline	6" Valve	E06605	David Ryan	1430 Eastside Rd	7.40	02N11E0602500	**33.23**						
Ewald Line 68.50 Acres	WB	E06605a	V. Robert Thomsen	2450 Old Dalles Rd	16.00	02N10E0101800	**71.84**						
			V. Robert Thomsen	1350 Eastside Rd	22.00	02N11E0602300	**98.78**						
			V. Robert Thomsen	1369 Eastside Rd	14.00	02N11E0602400	**62.86**						
			V. Robert Thomsen	1595 Eastside Rd	1.80	02N11E0602800	**8.08**						
			V. Robert Thomsen	2490 Old Dalles Rd	1.90	02N11E0602801	**8.53**						
			V. Robert Thomsen	2520 Old Dalles Rd	1.80	02N11E0602802	**8.08**						
			V. Robert Thomsen	2450 Old Dalles Rd	0.20	02N11E0603101	**0.90**						
Pine Crest PUD			BBK Holdings, LLC	1357 Hidden Oaks Dr	0.50	02N11E06D00104	**2.25**						
Pine Crest PUD			BBK Holdings, LLC	1400 Hidden Oaks Dr	1.25	02N11E06D00106	**5.61**						
Pine Crest PUD			BBK Holdings, LLC	Hidden Oaks Dr	1.65	02N11E06D00107	**7.41**						
				Subtotal:	**68.50**			68.50		68.50			
Whiskey Creek Pipeline	1" Valve	E06606	BBK Holdings, LLC	1328 Hidden Oaks Dr	1.00	02N11E06D00101	**4.49**						
				Subtotal:	**1.00**			1.00		1.00			
Whiskey Creek Pipeline	4" Valve - Tee	E06607	Richard H. Fox	2470 Lichens Dr	0.90	02N11E0602000	**4.04**						
			Richard H. Fox	2470 Lichens Dr	2.90	02N11E0602001	**13.02**						
			Richard H. Fox	2470 Lichens Dr	0.30	02N11E0602002	**1.35**						
			John E. Krussow	1315 Eastside Rd	10.80	02N11E0601900	**48.49**						
				Subtotal:	**14.90**			14.90		14.90			
Whiskey Creek Pipeline	4" Valve	E06608	Muriel Ing	1291 Eastside Rd	18.50	02N11E0601901	**83.07**						
				Subtotal:	**18.50**			18.50		18.50			
Whiskey Creek Pipeline	4" Valve	E06609	Susana M. Arechaga	1120 Eastside Rd	1.00	02N11E0601600	**4.49**						
Lariza Line 67.70 acres			Lariza Orchards, Inc.	1074 Eastside Rd	3.90	02N11E0601200	**17.51**						
			Lariza Orchards, Inc.	Eastside Rd	17.80	02N10E0101801	**79.92**						
			Lariza Orchards, Inc.	Eastside Rd	7.00	02N10E0100202	**31.43**						
			Lariza Orchards, Inc.	1080 Eastside Rd	13.30	02N11E0601201	**59.72**						
			Lariza Orchards, Inc.	1280 Eastside Rd	20.70	02N11E0602200	**92.94**						

EASTSIDE CANAL

Canal/Pipeline	Diversion	Weir Valve #	Customer Name	Property Address	Irrigated Acres	Legal Description	GPM						
			Lariza Orchards, Inc.	1280 Eastside Rd	2.00	02N11E0602201	**8.98**						
			Lariza Orchards, Inc.	1280 Eastside Rd	2.00	02N11E0602202	**8.98**						
				Subtotal:	**67.70**			67.70		67.70			
Whiskey Creek Pipeline	4" Valve	E06610	Muriel Ing	1217 Eastside Rd	7.70	02N11E0602100	**34.57**						
			Muriel Ing	1222 Eastside Rd	~~4.35~~	02N11E0601800	**19.53**						
		2014	*Ing Leased Instream 2.95 ac.*		*1.40*								
				Subtotal:	**~~12.05~~**	***9.10***		12.05		12.05			
Whiskey Creek Pipeline	2" Valve	E06611	Richard Dills	1221 Eastside Rd	1.08	02N11E0601702	**4.85**						
				Subtotal:	**1.08**			1.08		1.08			
Whiskey Creek Pipeline	4" Valve	E06612	Patrick D. Corelli, Sr	1223 Eastside Rd	2.00	02N11E0601800	**8.98**						
Panorama Point Line 5.00 acres			Hood River Co. Forestry Dept.	Panorama Point	3.00	02N11E0601400	**13.47**						
				Subtotal:	**5.00**			5.00		5.00			
Whiskey Creek Pipeline	4" Valve	E06613	Ortega Orchards, Inc.	1143 Eastside Rd	24.60	02N11E0601301	**110.45**						
				Subtotal:	**24.60**			24.60		24.60			
Whiskey Creek Pipeline	2" Valve	E06614	Jesse Gronner	1075 Eastside Rd	8.60	02N11E0600400	**38.61**						
			Jesse Gronner	1095 Eastside Rd	0.40	02N11E0600302	**1.80**						
Not sure if correct for Gronner???				**Subtotal:**	**9.00**			9.00		9.00			
Whiskey Creek Pipeline	4" Valve	E06615	Nancy L. Behrmann	1075 Eastside Rd	0.30	02N11E0601001	**1.35**						
			Jesse Gronner	1055 Eastside Rd	13.00	02N11E0600500	**58.37**						
				Subtotal:	**13.30**			13.30		13.30			
Whiskey Creek Pipeline	6" Valve	E06616	Frances L. Bickell, Trustee	955 Eastside Rd	1.30	02N11E0600700	**5.84**						
			Newman Family Farms, LLC	975 Eastside Rd	10.30	02N11E0600600	**46.25**						
			Newman Family Farms, LLC	995 Eastside Rd	13.00	02N11E0600701	**58.37**						
			Newman Family Farms, LLC	1015 Eastside Rd	21.50	02N11E0600800	**96.54**						
				Subtotal:	**46.10**			46.10		46.10			
Whiskey Creek Pipeline	??" Valve	E06617	Jeff Pickhardt	1000 Eastside Rd	16.00	02N11E0601100	**71.84**						
Hukari Line 36.70 acres			Jeff Pickhardt	810 Eastside Rd	3.00	03N11E31C01500	**13.47**						
			Lariza Orchards, Inc.	905 Eastside Rd	17.70	03N11E31C01700	**79.47**						
				Subtotal:	**36.70**			36.70		36.70			
Whiskey Creek Pipeline	2" Valve	E06618	Michael W. Kroeger	945 Eastside Rd	2.00	03N11E31C02300	**8.98**						
				Subtotal:	**2.00**			2.00		2.00			
Whiskey Creek Pipeline	4" Valve	E06619	Michael W. Kroeger	945 Eastside Rd	4.40	03N11E31C01800	**19.76**						
			Michael W. Kroeger	945 Eastside Rd	2.80	03N11E31C01900	**12.57**						
				Subtotal:	**7.20**			7.20		7.20			
Whiskey Creek Pipeline	4" Valve	E06620	Gary W. Wells et al	855 Eastside Rd	10.00	03N11E31C00900	**44.90**						
				Subtotal:	**10.00**			10.00		10.00			
Whiskey Creek Pipeline	6" Valve	E06621	Lars Reierson	789 Highline Dr	40.30	03N11E31C00100	**180.95**						

EASTSIDE CANAL

Canal/Pipeline	Diversion	Weir Valve #	Customer Name	Property Address	Irrigated Acres	Legal Description	GPM						
		2015	*Leased Instream 9 ac.*	**Subtotal:**	**~~40.30~~**	***31.30***		40.30		40.30			
										425.03	**Whiskey Creek Pipeline**		
Lower Highline Pipeline	6" Valve - Main	**E06700**		**Total Acres: 75.15**	**includes Tiffany, Sheppard Lines**								
Lower Highline Pipeline	WB	E06702A	Maureen McKenzie-Sherpa	835 Eastside Rd	6.00	03N11E31C01400	**26.94**						
			Ellen Shapley	781 Highline Dr	1.70	03N11E31C00101	**7.63**						
				Subtotal:	**7.70**			7.70		7.70			
Lower Highline Pipeline	WB	E06702B	Kathryn K. Arendt	789 Highline Dr	0.30	03N11E31C00500	**1.35**						
Tiffany Line 2.05 acres			Ryan B. Mitchell	714 Highline Dr	0.20	03N11E31C01100	**0.90**						
			Robert E. Hegemann	695 Highline Dr	0.40	03N11E31C00300	**1.80**						
			Ryan B. Mitchell	705 Highline Dr	0.30	03N11E31C00600	**1.35**						
			Kenneth A. Randall	730 Highline Dr	0.20	03N11E31C01200	**0.90**						
			Ronald K. Tiffany	685 Highline Dr	0.20	03N11E31C00601	**0.90**						
			Ronald K. Tiffany	685 Highline Dr	0.35	03N11E31C00602	**1.57**						
			John R. Windle	786 Highline Dr	0.10	03N11E31C01301	**0.45**						
				Subtotal:	**2.05**			2.05		2.05			
Lower Highline Pipeline	WB	E06703A	Anita Hasegawa	649 Highline Dr	0.50	03N11E31C01001	**2.25**						
Sheppard Line 23.60 acres			Anita Hasegawa	710 Highline Dr	0.60	03N11E31C01002	**2.69**						
			William W. Nelson	680 Highline Dr	2.20	03N11E31B02400	**9.88**						
			Kenneth Woodrich	678 Highline Dr	0.90	03N11E31B02409	**4.04**						
				Subtotal:	**4.20**			4.20		4.20			
Lower Highline Pipeline	WB	E06703B	Craig Sheppard	649 Hwy 35	14.60	03N10E36A00601	**65.55**						
			Craig Sheppard	649 Hwy 35	4.40	03N10E36D00200	**19.76**						
			John Stevens	589 Eastside Rd	0.40	03N10E36A00600	**1.80**						
				Subtotal:	**19.40**			19.40		19.40			
Lower Highline Pipeline	2" pipeline	E06704	Christopher Korwin	679 Highline Dr	0.50	03N11E31B02603	**2.25**						
			Steve B. Salmon	669 Highline Dr	0.50	03N11E31B02602	**2.25**						
			David Wesley Scarborough	675 Highline Dr	0.85	03N11E31B02600	**3.82**						
			David Wesley Scarborough	675 Highline Dr	0.80	03N11E31C00800	**3.59**						
			Gwendolyn D. Thompson Davis	681 Highline Dr	0.15	03N11E31C00803	**0.67**						
				Subtotal:	**2.80**			2.80		2.80			
Lower Highline Pipeline	WB	E06705A	Jeffrey Rippey	565 Highline Dr	0.70	03N11E31B02701	**3.14**						
				Subtotal:	**0.70**			0.70		0.70			
	WB	E06705B	Cherry Trautwein	575 Highline Dr	2.05	03N11E31B02700	**9.20**						
			John MacRae Wylde	560 Highline Dr	0.85	03N11E31B02702	**3.82**						
				Subtotal:	**2.90**			2.90		2.90			
	WB	E06705C	Reetinder S. Virk	557 Highline Dr	1.00	03N11E31B02800	**4.49**						
			Cory Johnston	545 Highline Dr	0.70	03N11E31B02802	**3.14**						
			Casey Wright	555 Highline Dr	0.90	03N11E31B02801	**4.04**						
				Subtotal:	**2.60**			2.60		2.60			
	WB	E06705D	Robert Hayes	527 Highline Dr	1.00	03N11E31B03001	**4.49**						

EASTSIDE CANAL

Canal/Pipeline	Diversion	Weir Valve #	Customer Name	Property Address	Irrigated Acres	Legal Description	GPM						
			Donald W. Hull	519 Highline Dr	1.00	03N11E31B00400	**4.49**						
			Dennis Keller	521 Highline Dr	2.60	03N11E31B03000	**11.67**						
			Daniel J. Kelly	529 Highline Dr	1.00	03N11E31B03004	**4.49**						
			Bruce Peterson	517 Highline Dr	2.00	03N11E31B00200	**8.98**						
			John M. Wood	525 Highline Dr	1.50	03N11E31B03002	**6.74**						
				Subtotal:	**9.10**			9.10		9.10			
Lower Highline Pipeline	WB	E06706	Ivan Mark Sova	550 Highline Dr	0.25	03N11E31B01700	**1.12**						
			Ivan Mark Sova	550 Highline Dr	0.75	03N11E31B01702	**3.37**						
			Sheri Mihasci	556 Highline Dr	0.30	03N11E31B01701	**1.35**						
				Subtotal:	**1.30**			1.30		1.30			
Lower Highline Pipeline	WB	E06707A	Donald W. Hull	515 Highline Dr	1.00	03N11E31B00401	**4.49**						
			Off overflow line	**Subtotal:**	**1.00**			1.00		1.00			
	WB	E06707B	C. Ann Bryant	Old Columbia River Hwy	0.80	03N11E31B00301	**3.59**						
			John C. Bryant	2440 Old Col River Hwy	6.00	03N11E31B00100	**26.94**						
			John C. Bryant	2520 Old Col River Hwy	1.50	03N11E31B00300	**6.74**						
				Subtotal:	**8.30**			8.30		8.30			
	WB	E06707C	Cynthia Blachly	2554 Riverview Dr	0.20	03N11E31B00603	**0.90**						
			Gerald Brown	2540 Riverview Dr	0.20	03N11E31B00600	**0.90**						
			Gerald Brown	2540 Riverview Dr	0.20	03N11E31B00601	**0.90**						
			Kristi Workman	2550 Riverview Dr	0.20	03N11E31B00602	**0.90**						
			Richard M. Kirby	2595 Riverview Dr	1.00	03N11E31B01412	**4.49**						
			Joseph May	490 Highline Dr	1.75	03N11E31B00500	**7.86**						
			Tim M. Rayle	510 Highline Dr	1.00	03N11E31B01410	**4.49**						
			W.O. Sheppard Jr.	2635 Riverview Dr	0.20	03N11E31B01409	**0.90**						
			W.O. Sheppard Jr.	2570 Riverview Dr	0.80	03N11E31B00701	**3.59**						
			Carroll Tveidt	510 Highline Dr	1.00	03N11E31B01406	**4.49**						
			Bruce E. Zega	2560 Riverview Dr	0.70	03N11E31B00700	**3.14**						
				Subtotal:	**7.25**			7.25		7.25			
	WB	E06707D	Wilford Carey	540 Highline Dr	1.20	03N11E31B01405	**5.39**						
			Wilford Carey	540 Highline Dr	0.20	03N11E31B01300	**0.90**						
			Glenn Phillips	534 Highline Dr	0.20	03N11E31B01408	**0.90**						
				Subtotal:	**1.60**			1.60		1.60			
	WB	E06707E	John R. Arens	2585 Riverview Dr	0.45	03N11E31B01401	**2.02**						
			Steve Utaski	2600 Riverview Dr	0.30	03N11E31B01000	**1.35**						
			Matthew S. Swihart	2590 Riverview Dr	0.30	03N11E31B00900	**1.35**						
			Matthew S. Swihart	2590 Riverview Dr	0.05	03N11E31B01407	**0.22**						
			Philip Chadwick	2579 Old Col River Hwy	0.50	03N11E31B01601	**2.25**						
			Patrick Graham	2616 Riverview Dr	0.50	03N11E31B01415	**2.25**						
			Charles C. Cox	2615 Riverview Dr	0.30	03N11E31B01200	**1.35**						
			Wesley D. Ervin	2610 Riverview Dr	0.30	03N11E31B01100	**1.35**						
			Leslie Pyfer	2595 Old Col River Hwy	0.30	03N11E31B01603	**1.35**						

EASTSIDE CANAL

Canal/Pipeline	Diversion	Weir Valve #	Customer Name	Property Address	Irrigated Acres	Legal Description	GPM						
			Victor Herring	2620 Riverview Dr	0.30	03N11E31B01400	**1.35**						
			Norman Mayer	2575 Old Col River Hwy	0.50	03N11E31B01602	**2.25**						
			Charles H. Reed	2615 Old Col River Hwy	0.45	03N11E31B01600	**2.02**						
				Subtotal:	**4.25**			4.25		4.25			
										75.15	**Lower Highline**		
								3306.13	**TOTAL**				

Eastside Canal	**Acres**		
Eastside Canal System	**3264.63**	**beginning at WB**	
Denton/Semple Line	2.80	off CLP not included in Eastside System total	
CLP 8" Pipeline	38.70	off CLP not included in Eastside System total	
Eastside Canal	944.55		
Rasmussen Line	315.15		
Mathieson Line	72.20		
Crag Rat Line	127.30		
Loopline	791.20		
Dethman/Swyers Line	145.05		
Paasch Line	170.55		
Kelly Line	25.05		
Thomsen Line	151.10		
Nafsinger Line	22.30		
Whiskey Creek Diversion	**500.18**	**includes Whiskey Creek and Lower Highline Pipelines**	
Whiskey Creek Pipeline	425.03		

EASTSIDE CANAL

Canal/Pipeline	Diversion	Weir Valve #	Customer Name	Property Address	Irrigated Acres	Legal Description	GPM						
Ewald Line	68.50												
Lariza Line	67.70												
Panorama Point Line	5.00												
Hukari Line	36.70												
Lower Highline	75.15												
Tiffany Line	2.05												
Sheppard Line	23.60												

Dukes Valley Canal

Canal/Pipeline	Diversion	Weir Valve #	Customer Name	Property Address	Irrigated Acres	Legal Description	GPM						
Dukes Valley System				**Total Acres: 1905.10**									
Dukes Valley Diversion	2" Valve	DV01000	Ruth S. Beecher	4770 Hwy 35	5.70	01N10E1000400	**25.59**						
				Subtotal:	**5.70**			5.70			5.70		
Cameron Hill Diversion	WB	DV01100		**Total: 100.80 Acres**									
Cameron Hill	WB	DV01101	Thomas L. Ortman	4155 Central Vale Dr	14.70	01N10E0301700	**66.00**						
			Thomas L. Ortman	4175 Central Vale Dr	5.90	01N10E0301800	**26.49**						
				Subtotal:	**20.60**			20.60		20.60			
Cameron Hill	4" Valve	DV01102	John C. Bryant	4475 Central Vale Dr	12.00	01N10E0302100	**53.88**						
				Subtotal:	**12.00**			12.00		12.00			
Cameron Hill/Sheppard's Ditch	WB	DV01103	John C. Bryant	4300 Central Vale Dr	29.10	01N10E0301300	**130.66**						
				Subtotal:	**29.10**			29.10		29.10			
Cameron Hill/Sheppard's Ditch	WB	DV01104	Wilma L. Packer	4150 Central Vale Dr	23.50	01N10E0301200	**105.52**						
			Margery K. Loomis	4300 Central Vale Dr	15.60	01N10E0301100	**70.04**						
				Subtotal:	**39.10**			39.10		39.10			
										100.80	**Cameron Hill**		
Dukes Valley Canal				**Total Acres : 281.85**									
Dukes Valley Canal	TO	DV01200	Murrary L. Henage	4140 Central Vale Dr	2.60	02N10E3403500	**11.67**						
			Lyle Henage	4120 Central Vale Dr	0.40	02N10E3403501	**1.80**						
			Lyle Henage	4142 Central Vale Dr	0.40	02N10E3403600	**1.80**						
			David W. Wild	4142 Central Vale Dr	7.80	02N10E3403502	**35.02**						
				Subtotal:	**11.20**			11.20			11.20		
Dukes Valley Canal	TO	DV01300	David W. Wild	4142 Central Vale Dr	5.00	02N10E3402700	**22.45**						
			David W. Wild	4142A Central Vale Dr	7.00	02N10E3403300	**31.43**						
			David W. Wild	4136 Central Vale Dr	8.00	02N10E3403400	**35.92**						
				Subtotal:	**20.00**			20.00			20.00		
Dukes Valley Canal	TO	DV01400	D. Joan Fowler	3895 Wy'east Rd	6.00	02N10E3402600	**26.94**						
			D. Joan Fowler	3946 Wy'east Rd	7.20	02N10E3404000	**32.33**						
			D. Joan Fowler	3900 Wy'east Rd	9.50	02N10E3404200	**42.66**						
			Jason R. Peterson	3858 Wy'east Rd	2.20	02N10E3402500	**9.88**						
			Kenneth W. Raasch	3926 Wy'east Rd	2.30	02N10E3404100	**10.33**						
				Subtotal:	**27.20**			27.20			27.20		
Dukes Valley Canal	TO	DV01500	Calvin L. Smith	4135 Sylvester Dr	10.00	02N10E3403200	**44.90**						
			Calvin L. Smith	4137 Sylvester Dr	4.60	02N10E3402801	**20.65**						
				Subtotal:	**14.60**			14.60			14.60		
Dukes Valley Canal	WB	DV01600	Sean Bohince	4209 Sylvester Dr	12.00	02N10E3301000	**53.88**						
			Ian Bohince		8.40	02N10E3301001	**37.72**						
			Zach Bohince		6.50	02N10E3301003	**29.19**						
				Subtotal:	**26.90**			26.90			26.90		
Dukes Valley Canal	TO	DV01700	Susan Vovou	4205 Sylvester Dr	13.10	02N10E3403101	**58.82**						

Dukes Valley Canal

Canal/Pipeline	Diversion	Weir Valve #	Customer Name	Property Address	Irrigated Acres	Legal Description	GPM						
				Subtotal:	**13.10**			13.10			13.10		
Dukes Valley Canal	WB	DV01800A	Thomas J. Betts	4131 Sylvester Dr	7.20	02N10E3402100	**32.33**						
				Subtotal:	**7.20**			7.20			7.20		
Not sure if this takeout	WB	DV01800B	A. Yolande Land	4141 Sylvester Dr	1.00	02N10E3402800	**4.49**						
is correct??			Marjorie Rush	4145 Sylvester Dr	0.80	02N10E3402900	**3.59**						
From bar ditch along Wy'east Rd??			Shirlyn Betts	4149 Sylvester Dr	0.20	02N10E3403000	**0.90**						
				Subtotal:	**2.00**			2.00			2.00		
Not sure about this takeout?	WB	DV01800C	David L. Vanek	3941 Sylvester Dr	1.50	02N10E3402400	**6.74**						
From bar ditch along Wy'east Rd??				Subtotal:	**1.50**			1.50			1.50		
Land S. of Sylvester Dr.	WB	DV01800D	Clarence O. Neville	4200 Sylvester Dr	1.60	02N10E3401600	**7.18**						
				Subtotal:	**1.60**			1.60			1.60		
Dukes Valley Canal	TO	DV01900	Clarence O. Neville	4200 Sylvester Dr	13.90	02N10E3401600	**62.41**						
Land N. of Sylvester Dr.				Subtotal:	**13.90**			13.90			13.90		
Dukes Valley Canal	TO	DV02000	Clarence F. Franks, Trustee	4196 Sylvester Dr	3.40	02N10E3401500	**15.27**						
				Subtotal:	**3.40**			3.40			3.40		
Dukes Valley Canal	TO	DV02100	James Patrin	4054 Sylvester Dr	2.60	02N10E3402000	**11.67**						
				Subtotal:	**2.60**			2.60			2.60		
Dukes Valley Canal	TO - 1" pipe	DV02200	James A. Bird	4050 Sylvester Dr	1.00	02N10E3401700	**4.49**						
				Subtotal:	**1.00**			1.00			1.00		
Dukes Valley Canal	TO	DV02300	Matthew Swihart	4100 Sylvester Dr	24.40	02N10E3401502	**109.56**						
				Subtotal:	**24.40**			24.40			24.40		
Dukes Valley Canal	WB	DV02400	Dwight E. Moe	3596 Lippman Rd	0.30	02N10E2706900	**1.35**						
			Dwight E. Moe	3596 Lippman Rd	7.30	02N10E2706800	**32.78**						
			Dwight E. Moe	3599 Lippman Rd	12.20	02N10E2804600	**54.78**						
			Lana Young	3600 Lippman Rd	1.00	02N10E2707000	**4.49**						
				Subtotal:	**20.80**			20.80			20.80		
Cherry Hill Diversion	**10" to WB**	**DV02500**		**Total: 25.90 Acres**									
Cherry Hill	WB	DV02501	Glacier Ranch, Inc.	3450 Lippman Rd	9.50	02N10E2706600	**42.66**						
			Guadalupe Gonzalez	3410 Lippman Rd	0.60	02N10E2706500	**2.69**						
			Vincento Castro	3401 Lippman Rd	0.10	02N10E2706400	**0.45**						
				Subtotal:	**10.20**			10.20		10.20			
Cherry Hill	WB	DV02502	Insun Sheirbon	3530 Lippman Rd	8.90	02N10E2706700	**39.96**						
				Subtotal:	**8.90**			8.90		8.90			
Cherry Hill	WB/Dole Valve	DV02503	Marvin L. Cagle	3495 Lippman Rd	3.50	02N10E2706200	**15.72**						
			Ronald Dunn	3435 Lippman Rd	3.30	02N10E2706300	**14.82**						

Dukes Valley Canal

Canal/Pipeline	Diversion	Weir Valve #	Customer Name	Property Address	Irrigated Acres	Legal Description	GPM						
				Subtotal:	**6.80**			6.80		6.80			
										25.90	**Cherry Hill Line**		
Dukes Valley Canal	TO	DV02600	Elizabeth Kollas	3428 Kollas Rd	0.60	02N10E2803600	**2.69**						
Sm area East side of land			Rill irrigation below canal	Subtotal:	**0.60**			0.60			0.60		
Rill irrigation			No water rights above canal										
Dukes Valley Canal	TO	DV02700	Peter Shames	3381 Kollas Rd	5.60	02N10E2804400	**25.14**						
				Subtotal:	**5.60**			5.60			5.60		
Dukes Valley Canal	WB	DV02800	Elizabeth Kollas	3428 Kollas Rd	13.20	02N10E2803600	**59.27**						
			Elizabeth Kollas	3366 Kollas Rd	12.00	02N10E2803800	**53.88**						
			Elizabeth Kollas	3366 Kollas Rd	2.00	02N10E2803900	**8.98**						
				Subtotal:	**27.20**			27.20			27.20		
Dukes Valley Canal	WB	DV02900	Elizabeth Kollas	3366 Kollas Rd	2.00	02N10E2803800	**8.98**						
			Elizabeth Kollas	3366 Kollas Rd	13.00	02N10E2803900	**58.37**						
				Subtotal:	**15.00**			15.00			15.00		
Dukes Valley Canal	TO	DV03000	????										
				Subtotal:									
Sheirbon Hill Diversion	**WB**	**DV03100**		**Total: 106.95 Acres**									
Sheirbon Hill	WB	DV03100	???										
Sheirbon Hill	2" Valve	DV03102	Jack Williams	3340 Kollas Rd	5.00	02N10E2801600	**22.45**						
				Subtotal:	**5.00**			5.00		5.00			
Sheirbon Hill	WB	DV03103	Glacier Ranch, Inc.	3551 Lippman Rd	3.10	02N10E2804000	**13.92**						
			Dwight E. Moe	3390 Lippman Rd	14.30	02N10E2804300	**64.21**						
				Subtotal:	**17.40**			17.40		17.40			
	WB	DV03104	Miguel Campos	3246 Lippman Rd	0.80	02N10E2801100	**3.59**						
			Keyvan Sarmasti	3300 Lippman Rd	12.20	02N10E2801400	**54.78**						
			Paul Woolery	3301 Kollas Rd	0.25	02N10E2801300	**1.12**						
			Insun Sheirbon	3220 Lippman Rd	1.50	02N10E2801000	**6.74**						
			Insun Sheirbon	3232 Lippman Rd	11.25	02N10E2801200	**50.51**						
				Subtotal:	**26.00**			26.00		26.00			
Sheirbon Hill	WB	DV03105	Joseph C. Sheirbon	3225 Lippman Rd	0.10	02N10E2704800	**0.45**						
			Joseph C. Sheirbon	3375 Lippman Rd	7.50	02N10E2706100	**33.68**						
			Joseph C. Sheirbon	3201 Lippman Rd	27.30	02N10E2704700	**122.58**						
				Subtotal:	**34.90**			34.90		34.90			
Sheirbon Hill	WB	DV03106A	Brad Thomas	3200 Wy'east Rd	0.10	02N10E2704901	**0.45**						
			David Wertsch	3196 Wy'east Rd	2.50	02N10E2704900	**11.23**						
			Darin Dahlstrom	3216 Wy'east Rd	0.40	02N10E2705100	**1.80**						
				Subtotal:	**3.00**			3.00		3.00			
Sheirbon Hill	WB	DV03106B	Michael Annett	3220 Wy'east Rd	2.60	02N10E2705000	**11.67**						
				Subtotal:	**2.60**			2.60		2.60			
Sheirbon Hill	WB	DV03106C	Steven R. Smith	3240 Wy'east Rd	10.00	02N10E2705300	**44.90**						

Dukes Valley Canal

Canal/Pipeline	Diversion	Weir Valve #	Customer Name	Property Address	Irrigated Acres	Legal Description	GPM						
			Rick Titus	3236 Wy'east Rd	6.30	02N10E2705200	**28.29**						
				Subtotal:	**16.30**			16.30		16.30			
Sheirbon Hill	WB	DV03106D	Dorothy A. Gilbertson	4115 Summit Dr	1.75	02N10E27BA06500	**7.86**						
			House - South side of property	Subtotal:	**1.75**			1.75		1.75			
										106.95	**Sheirbon Hill Line**		
Dukes Valley Canal	WB	DV03200	Golden Mountain, LLC	3381 Gilhouley Rd	6.75	02N10E2802900	**30.31**						
			Golden Mountain, LLC	Gilhouley Rd	5.00	02N10E2802800	**22.45**						
				Subtotal:	**11.75**			11.75			11.75		
Dukes Valley Canal	WB	DV03300	Norman Walls	3250 Kollas Rd	3.00	02N10E2801901	**13.47**						
				Subtotal:	**3.00**			3.00			3.00		
Dukes Valley Canal	WB	DV03400	????										
				Subtotal:									
Dukes Valley Canal	WB	DV03500	Gilhouley Farms, Inc. (Marsh)	3125 Gilhouley Rd	13.40	02N10E2801800	**60.17**						
				Subtotal:	**13.40**			13.40			13.40		
Dukes Valley Canal	WB	DV03600	Douglas A. Eastman	3285 Gilhouley Rd	5.00	02N10E2801700	**22.45**						
			Douglas A. Eastman	3285 Gilhouley Rd	3.20	02N10E2802700	**14.37**						
				Subtotal:	**8.20**			8.20			8.20		
											281.85	**Dukes Valley Canal**	
Marsh/Chamberlin Diversion	**WB**	**DV03700**		**Total: 431.05 Acres**									
Sweet Line Diversion	WB	DV03800		**Total: 55.35 Acres**									
Sweet Line Diversion	WB	DV03801	Dennis Buschauer	3055 Gilhouley Rd	0.40	02N10E2105801	**1.80**						
			James Sims	3051 Gilhouley Rd	0.20	02N10E2105802	**0.90**						
			James Sims	3051 Gilhouley Rd	4.65	02N10E2105800	**20.88**						
				Subtotal:	**5.25**			5.25		5.25			
Sweet Line	WB	DV03802	Joseph C. Sheirbon	3126 Kollas Rd	19.50	02N10E2802000	**87.56**						
				Subtotal:	**19.50**			19.50		19.50			
Sweet Line	Valve	DV03803	Douglas Neufeldt	3151 Kollas Rd	5.40	02N10E2800700	**24.25**						
			Peter B. Frothingham	4329 Summit Dr	3.60	02N10E2800502	**16.16**						
				Subtotal:	**9.00**			9.00		9.00			
Sweet Line	Valve	DV03804	Devery G. Broddie	3201 Kollas Rd	5.40	02N10E2800800	**24.25**						
				Subtotal:	**5.40**			5.40		5.40			
Sweet Line	Valve	DV03605	Linda L. Riggs	3200 Kollas Rd	4.40	02N10E2801900	**19.76**						
			Joseph W. Sheirbon, Jr.	3120 Lippman Rd	8.00	02N10E2800300	**35.92**						
			Hazel M. Baskins	4365 Summit Dr	2.30	02N10E2800600	**10.33**						
			Bob Baskins Trustee	3086 Kollas Rd	1.50	02N10E2800601	**6.74**						
				Subtotal:	**16.20**			16.20		16.20			
										55.35	**Sweet Line**		
Rock Acres Diversion	WB	DV03900		**Total: 88.10 Acres**									
Rock Acres Line				**Total: 39.85 Acres**									
Rock Acres Line	WB	DV03901	Michael Roberts	4636 Summit Dr	0.10	02N10E2103700	**0.45**						
				Subtotal:	**0.10**			0.10		0.10			

Dukes Valley Canal

Canal/Pipeline	Diversion	Weir Valve #	Customer Name	Property Address	Irrigated Acres	Legal Description	GPM						
Rock Acres Line	off pipe	DV03902	Jeffery Snyder	2935 Wheeler Rd	0.10	02N10E2104100	**0.45**						
				Subtotal:	**0.10**			0.10		0.10			
Rock Acres Line	off pipe	DV03903	Marion Morgan	2945 Dee Hwy	0.10	02N10E2104900	**0.45**						
		Frank Arnold	*Also irrigates TL 4000 no WR*	Subtotal:	**0.10**			0.10		0.10			
Rock Acres Line	off pipe	DV03904	Elizabeth I. Settje	2948 Dee Hwy	0.80	02N10E2104400	**3.59**						
				Subtotal:	**0.80**			0.80		0.80			
Rock Acres Line	off pipe	DV03905	Jennifer Marie Slocum	2930 Dee Hwy	0.70	02N10E2104401	**3.14**						
				Subtotal:	**0.70**			0.70		0.70			
Rock Acres Line	Valve	DV03906	John Harlin	2912 Dee Hwy	3.00	02N10E2104200	**13.47**						
				Subtotal:	**3.00**			3.00		3.00			
Rock Acres Line	Valve	DV03907	HEI, LLC	2740 Dee Hwy	0.30	02N10E2102000	**1.35**						
			HEI, LLC	2740 Dee Hwy	20.65	02N10E2102100	**92.72**						
				Subtotal:	**20.95**			20.95		20.95			
Rock Acres Line	Valve	DV03908	Richard E. Bagley	2928 Dee Hwy	1.00	02N10E2104300	**4.49**						
			Karin Platt	2958 Dee Hwy	0.60	02N10E2104600	**2.69**						
				Subtotal:	**1.60**			1.60		1.60			
Rock Acres Line	4" Valve	DV03909A	John Harlin	2912 Dee Hwy	6.10	02N10E2000500	**27.39**						
				Subtotal:	**6.10**			6.10		6.10			
Rock Acres Line	4" Valve	DV03909B	Stephen E. Mellor	2960 Dee Hwy	6.40	02N10E2000502	**28.74**						
				Subtotal:	**6.40**			6.40		6.40			
										39.85	**Rock Acres Line**		
Wheeler Road Line	WB	DV04000		**Total: 48.25 Acres**									
Wheeler Road Line	2" Valve	DV04001	Mark Alan Bakurjian	2906 Wheeler Rd	0.30	02N10E2102700	**1.35**						
				Subtotal:	**0.30**			0.30		0.30			
Wheeler Road Line	4" Valve	DV04002	Garin Buckles	2910 Wheeler Rd	16.65	02N10E2102600	**74.76**						
				Subtotal:	**16.65**			16.65		16.65			
Wheeler Road Line	2" Valve	DV04003	Jack A. Kent	2787 Dee Hwy	0.40	02N10E2102400	**1.80**						
			Georgia L. Tuttle	2803 Dee Hwy	0.10	02N10E2102500	**0.45**						
				Subtotal:	**0.50**			0.50		0.50			
Wheeler Road Line	2" Valve	DV04004	George R. Ward, Jr.	2675 Dee Hwy	24.50	02N10E2102300	**110.01**						
				Subtotal:	**24.50**			24.50		24.50			
Wheeler Road Line		DV04005	Russel A. Smith	2901 Wheeler Rd	6.30	02N10E2102800	**28.29**						
				Subtotal:	**6.30**			6.30		6.30			
										48.25	**Wheeler Road Line**		
Marsh/Chamberlin Line	TO - Pump	DV03701	Marvin O Borton	4554 Summit Dr	1.00	02N10E2103200	**4.49**						
				Subtotal:	**1.00**			1.00	1.00				
Marsh/Chamberlin Line	TO - Pump	DV03702	Ronald J. Gerhig	4600 Summit Dr	1.00	02N10E2103100	**4.49**						
				Subtotal:	**1.00**			1.00	1.00				

Dukes Valley Canal

Canal/Pipeline	Diversion	Weir Valve #	Customer Name	Property Address	Irrigated Acres	Legal Description	GPM						
Marsh/Chamberlin Line	Pump WB	DV03703	Wilford Carey	4656 Chamberlin Dr	2.00	02N10E2103300	**8.98**						
				Subtotal:	**2.00**			2.00	2.00				
Iwatsuki Diversion Box	**WB**	**DV04100**		**Total 244.90 Acres**									
Summit Road Line	**WB**	**DV04200**		**Total: 79.70 Acres**									
Summit Road Line	WB	DV04201	Joe C. Sheirbon, Sr.	4420 Summit Dr	18.00	02N10E2106000	**80.82**						
			Joe C. Sheirbon, Sr.	4420 Summit Dr	1.45	02N10E2106002	**6.51**						
			Ernie Delgado	4456 Summit Dr	0.50	02N10E2106001	**2.25**						
				Subtotal:	**19.95**			19.95		19.95			
Summit Road Line	WB	DV04202	Debbie Ramirez	4339 Summit Dr	1.40	02N10E2800500	**6.29**						
			Eugene Dallas	4321 Summit Dr	1.40	02N10E2800501	**6.29**						
			Joe C. Sheirbon, Sr.	4340 Summit Dr	4.65	02N10E2106900	**20.88**						
				Subtotal:	**7.45**			7.45		7.45			
Summit Road Line	Willy Box	DV04203	James Ferrell	3100 Lippman Rd	1.20	02N10E2800200	**5.39**						
			Miguel Marquez	4265 Summit Dr	1.70	02N10E2800100	**7.63**						
			Joseph C. Sheirbon	4280 Summit Dr	0.75	02N10E2107000	**3.37**						
				Subtotal:	**3.65**			3.65		3.65			
Summit Road Line	4" Valve	DV04204	Shirley Chrisman	4231 Summit Dr	~~9.00~~	02N10E2704200	**40.41**						
		2014	*Chrisman Leased Instream 9 ac.*										
	4" Valve	DV04204a	Fernando M. Marquez	3123 Lippman Rd	0.10	02N10E2704500	**0.45**						
			Joseph C. Sheirbon	3095 Lippman Rd	3.30	02N10E2704400	**14.82**						
			Joe C. Sheirbon, Sr.	4261 Summit Dr	1.00	02N10E2704300	**4.49**						
				Subtotal:	~~**13.40**~~ ***4.40***			13.40		13.40			
Summit Road Line	Valve	DV04205A	Jesus Jimenez	4191 Summit Dr	4.80	02N10E2704100	**21.55**						
				Subtotal:	**4.80**			4.80		4.80			
Summit Road Line	Valve	DV04205B	John R. Buckley	4161 Summit Dr	0.40	02N10E2704000	**1.80**						
			John R. Buckley	4171 Summit Dr	4.00	02N10E2704101	**17.96**						
				Subtotal:	**4.40**			4.40		4.40			
Summit Road Line	4" Valve	DV04206	Dorothy A. Gilbertson	4115 Summit Dr	5.25	02N10E27BA06500	**23.57**						
			North field of property	Subtotal:	**5.25**			5.25		5.25			
Summit Road Line	4" Valve	DV04207	Hood River County Fair Board	3020 Wy'east Rd	17.00	02N10E2202400	**76.33**						
				Subtotal:	**17.00**			17.00		17.00			
Summit Road Line - Overflow	Pump from	DV04208	Michael J. Donahue	3920 Summit Dr	3.80	02N10E22DC01500	**17.06**						
	bar ditch			Subtotal:	**3.80**			3.80		3.80			
										79.70	**Summit Road Line**		
Bartlett Loop Line	**4" Valve**	**DV04300**	**From Summit Road Line**	**Total: 14.10 Acres**									
Bartlett Loop Line	2" Valve	DV04301	Jerry D. Osbourn	4101 Summit Dr	3.90	02N10E27BA06501	**17.51**						
				Subtotal:	**3.90**			3.90		3.90			
Bartlett Loop Line	2" Valve	DV04302	Bartlett Loop Outside	21 Patrons	3.20	02N10E27BA04300	**14.37**						

Dukes Valley Canal

Canal/Pipeline	Diversion	Weir Valve #	Customer Name	Property Address	Irrigated Acres	Legal Description	GPM						
			See Attached List			to							
						02N10E27BA06400							
				Subtotal:	**3.20**			3.20		3.20			
Bartlett Loop Line	2" Valve	DV04303	Bartlett Loop Inside	43 Patrons	7.00	02N10E27BA00100	**31.43**						
			See Attached List			to							
						02N10E27BA04200							
				Subtotal:	**7.00**			7.00		7.00			
										14.10	**Bartlett Loop Line**		
Wy'East Road Line	**Valve**	**DV04400**	**From Summit Road Line**	**Total: 29.10 Acres**									
Wy'East Road Line - North	Valve	DV04401	Victor Manzo	3015 Wy'east Rd	0.70	02N10E22DC00700	**3.14**						
			Michael W. Hoikka	3996 Summit Dr	0.80	02N10E22DC01401	**3.59**						
			Miguel Munoz	2947 Wy'east Rd	0.55	02N10E22DC00601	**2.47**						
			Miguel Munoz	2947 Wy'east Rd	0.40	02N10E22DC00500	**1.80**						
			Roy E. Nellermoe	3035 Wy'east Rd	1.00	02N10E22DC01300	**4.49**						
			Ubaldo Ontiveros	2991 Wy'east Rd	0.70	02N10E22DC00800	**3.14**						
			Tyson Hazlett	3005 Wy'east Rd	0.80	02N10E22DC01000	**3.59**						
			Shane Willis	3007 Wy'east Rd	0.35	02N10E22DC01100	**1.57**						
			Phillip J. Stickney	3025 Wy'east Rd	0.70	02N10E22DC01200	**3.14**						
			Adelino Trejo	2967 Wy'east Rd	2.45	02N10E22DC00600	**11.00**						
			Martha Barajas	2999 Wy'east Rd	0.75	02N10E22DC00900	**3.37**						
			Macario Bibian	4000 Summit Dr	0.40	02N10E22DC01400	**1.80**						
				Subtotal:	**9.60**			9.60		9.60			
Wy'East Road Line - South	2" Valve	DV04402	Ernest Enos	3945 Summit Dr	0.20	02N10E27A02700	**0.90**						
			Beatrice Goss-Lane Trust	3925 Summit Dr	0.40	02N10E27A02500	**1.80**						
			Tammie Johnson	3969 Summit Dr	0.20	02N10E27A02800	**0.90**						
			Salvador Marquez	3957 Summit Dr	0.40	02N10E27A02801	**1.80**						
			Douglas Nichols	3977 Summit Dr	0.30	02N10E27A02900	**1.35**						
			Marco Medrano-Perez	3999 Summit Dr	0.40	02N10E27A03000	**1.80**						
	Valve	DV04402a	Fernando Rodriguez	3911 Summit Dr	0.40	02N10E27A02400	**1.80**						
			Esteban R. Sanchez	3937 Summit Dr	0.20	02N10E27A02600	**0.90**						
	Valve	DV04402b	Richard Stearns	3889 Summit Dr	0.70	02N10E27A02300	**3.14**						
				Subtotal:	**3.20**			3.20		3.20			
Wy'East Road Line - South	2" Valve	DV04403	Eldon T. Cates	3077 Wy'east Rd	0.50	02N10E27A03100	**2.25**						
			Leah Hall	3081 Wy'east Rd	0.95	02N10E27A03111	**4.27**						
			Edward Fix	3950 Kirby Dr	0.45	02N10E27A03104	**2.02**						
			Aurelio Gonzalez	3095 Wy'east Rd	0.35	02N10E27A03101	**1.57**						
			Terry Kirby	3972 Kirby Dr	0.45	02N10E27A03103	**2.02**						
			Kevin Long	3106 Kirby Dr	0.45	02N10E27A03107	**2.02**						
			Agustin Lara	3986 Kirby Dr	0.45	02N10E27A03105	**2.02**						
			Herbert R. Martin	3936 Kirby Dr	0.45	02N10E27A03102	**2.02**						
			Caleb Walker	3087 Wy'east Rd	0.55	02N10E27A03110	**2.47**						
			Alice Rawlings	3085 Wy'east Rd	0.50	02N10E27A03109	**2.25**						
			Thomas M. Warren	3091 Wy'east Rd	0.45	02N10E27A03112	**2.02**						
			Thomas M. Warren	3089 Wy'east Rd	0.45	02N10E27A03108	**2.02**						
			Pedro Y. Crisantos	3093 Wy'east Rd	0.85	02N10E27A03106	**3.82**						
				Subtotal:	**6.85**			6.85		6.85			

Dukes Valley Canal

Canal/Pipeline	Diversion	Weir Valve #	Customer Name	Property Address	Irrigated Acres	Legal Description	GPM						
Wy'East Road Line - South	2" Valve	DV04404	Helen Albrecht	3999 Kirby Dr	0.45	02N10E27A03200	**2.02**						
			Clayton Curtis	3989 Kirby Dr	0.45	02N10E27A03203	**2.02**						
			Denver I. Mason, Jr.	3129 Wy'east Rd	6.90	02N10E27A03201	**30.98**						
			Benito Ortega	3971 Kirby Dr	0.80	02N10E27A03202	**3.59**						
				Subtotal:	**8.60**			8.60		8.60			
Wy'East Road Line - South	2" Valve	DV04405	Paul David Blumenstein, Sr.	3139 Wy'east Rd	0.35	02N10E27A03400	**1.57**						
			Mary Calisti	3135 Wy'east Rd	0.30	02N10E27A03300	**1.35**						
			Merlin L. Parmiter	3143 Wy'east Rd	0.20	02N10E27A03500	**0.90**						
				Subtotal:	**0.85**			0.85		0.85			
										29.10	**Wy'east Road Line**		
Wy'East School Line	**WB**	**DV04500**		**Total: 122.00 Acres**									
Wy'East School Line	TO	DV04501	Joseph C. Sheirbon	4380 Summit Dr	32.00	02N10E2106500	**143.68**						
				Subtotal:	**32.00**			32.00		32.00			
Wy'East School Line	WB	DV04502	Joseph C. Sheirbon	4390 Summit Dr	0.55	02N10E2106600	**2.47**						
			Joseph C. Sheirbon	4280 Summit Dr	0.75	02N10E2107000	**3.37**						
				Subtotal:	**1.30**			1.30		1.30			
Wy'East School Line	WB	DV04503	Joseph C. Sheirbon	4260 Summit Dr	38.40	02N10E2202300	**172.42**						
				Subtotal:	**38.40**			38.40		38.40			
Wy'East School Line	WB	DV04504	Joseph W. Sheirbon	4225 Chamberlin Dr	10.25	02N10E2201900	**46.02**						
			Joseph W. Sheirbon	4296 Summit Dr	0.75	02N10E2106701	**3.37**						
				Subtotal:	**11.00**			11.00		11.00			
Wy'East School Line	WB	DV04505	Hood River School - Wy'east	3000 Wy'east Rd	19.00	02N10E2202200	**85.31**						
				Subtotal:	**19.00**			19.00		19.00			
Wy'east School Line Overflow Total: 20.30 ac.													
Wy'East School Line-Overflow	TO - Pump	DV04506	Felipe Castaneda	2929 Wy'east Rd	1.25	02N10E22DC00300	**5.61**						
			David Culpepper	2939 Wy'east Rd	1.25	02N10E22DC00302	**5.61**						
				Subtotal:	**2.50**			2.50		2.50			
Wy'East School Line-Overflow	TO - Pump	DV04508	Karen Clark	2960 Kusisto Rd	4.90	02N10E22DC01600	**22.00**						
				Subtotal:	**4.90**			4.90		4.90			
Wy'East School Line-Overflow	TO - Pump	DV04509	Lori A. Fortune	2964 Kusisto Rd	2.50	02N10E22DC01702	**11.23**						
			James M. Kahoe	3910 Summit Dr	0.65	02N10E22DC01701	**2.92**						
			Sandi Sohler	3890 Summit Dr	2.45	02N10E22DC01700	**11.00**						
				Subtotal:	**5.60**			5.60		5.60			
Wy'East School Line-Overflow		DV04510	William F. Askins, Jr.	3823 Summit Dr	0.80	02N10E27A02103	**3.59**						
Not sure where irrigation water			Patricia Gehrig	3817 Summit Dr	0.50	02N10E27A02101	**2.25**						
comes from for these patrons			Rudy F. Gehrig, Jr.	3811 Summit Dr	4.20	02N10E27A02102	**18.86**						
			Crispin Valle	3801 Summit Dr	0.80	02N10E27A02100	**3.59**						
			Devon J. Wells	3845 Summit Dr	1.00	02N10E27A02200	**4.49**						
				Subtotal:	**7.30**			7.30		7.30			
										122.00	**Wy'east School Line**		
Marsh/Chamberlin Line	WB	DV03704	Bradford G. Picking	4591 Chamberlin Dr	23.50	02N10E2106101	**105.52**						
				Subtotal:	**23.50**			23.50	23.50				

Dukes Valley Canal

Canal/Pipeline	Diversion	Weir Valve #	Customer Name	Property Address	Irrigated Acres	Legal Description	GPM						
Marsh/Chamberlin Line	Valve	DV03705	Maria Luz Cordova, Trust	4591 Chamberlin Dr	1.00	02N10E2106100	**4.49**						
				Subtotal:	**1.00**			1.00	1.00				
Marsh/Chamberlin Line	WB	DV03706	George M. Watanabe	4475 Chamberlin Dr	14.20	02N10E2106200	**63.76**						
				Subtotal:	**14.20**			14.20	14.20				
									42.70	**Marsh/Chamberlin Line**			
Chamberlin Pressure Line	**WB**	**DV04600**	**Diversion Box**		**Total: 509.05 Acres**								
			Chamberlin Pressure Line Total: 409.35 ac.										
Poole Line Diversion	**4 Valve**	**DV04700**		**Total: 62.80 Acres**									
Poole Line	4" Valve	DV04701	Donald R. Poole	2669 Wheeler Rd	0.25	02N10E2100600	**1.12**						
			Donald R. Poole	2669 Wheeler Rd	22.50	02N10E2100601	**101.03**						
				Subtotal:	**22.75**			22.75		22.75			
Poole Line	4" Valve	DV04702	Donald R. Poole	4580 Riverside Dr	6.85	02N10E21A00400	**30.76**						
			Donald R. Poole	2650 Dee Hwy	7.45	02N10E2101000	**33.45**						
				Subtotal:	**14.30**			14.30		14.30			
Poole Line	4" Valve	DV04703	Hendrick P. Danies	Riverside Dr	~~3.00~~	02N10E21A00500	**13.47**						
Riverside Drive			Hendrick P. Danies	4595 Riverside Dr	~~4.00~~	02N10E21A00502	**17.96**						
			Hendrick P. Danies	2600 Dee Hwy	~~2.75~~	02N10E21A00501	**12.35**						
		2014	*Danies Leased Instream 9.75 ac.*										
			Ronald Greenwood	4521 Riverside Dr	0.60	02N10E21A00604	**2.69**						
			Ronald Greenwood	4521 Riverside Dr	0.40	02N10E16D01700	**1.80**						
			Stephen A. Rogers	4531 Riverside Dr	0.40	02N10E21A00601	**1.80**						
			Michel Lacasse	Dee Hwy	1.50	02N10E21A00800	**6.74**						
			Steven L. Lindley	4411 Riverside Dr	4.30	02N10E21A00602	**19.31**						
			Susan McCourt	4460 Riverside Dr	6.95	02N10E21A00100	**31.21**						
			Richard H. McBee, Jr.	4431 Riverside Dr	1.85	02N10E16D01600	**8.31**						
				Subtotal:	~~**25.75**~~	***16.00***		25.75		25.75			
										62.80	**Poole Line**		
Chamberlin Pressure Line	6" Valve	DV04601	Robert Willis (Ryan)	4324 Chamberlin Dr	24.20	02N10E2100701	**108.66**						
		DV04601a	Laura Pagano	2789 Wheeler Rd	0.10	02N10E2100800	**0.45**						
				Subtotal:	**24.30**			24.30	24.30				
Chamberlin Pressure Line	3" Valve	DV04602	Minard L. Philley, Jr.	2529 Dee Hwy	7.90	02N10E21A01300	**35.47**						
			R. Janeen Wilds	Dee Hwy	1.30	02N10E21A01200	**5.84**						
			R. Janeen Wilds	2611 Dee Hwy	2.70	02N10E21A01100	**12.12**						
				Subtotal:	**11.90**			11.90	11.90				
Chamberlin Pressure Line	4" Valve	DV04603	Randy M. Graves	4324 Chamberlin Dr	19.20	02N10E21A01600	**86.21**						
			Randy M.Graves	4280 Chamberlin Dr	18.40	02N10E21A01500	**82.62**						
			Randy M. Graves	4300 Chamberlin Dr	0.20	02N10E21A01800	**0.90**						
				Subtotal:	**37.80**			37.80	37.80				
Chamberlin Pressure Line	4" Valve	DV04604	Tony Hilton	4201 Chamberlin Dr	37.40	02N10E2202000	**167.93**						
				Subtotal:	**37.40**			37.40	37.40				
Chamberlin Pressure Line	6" Valve	DV04605	Michael J. Oates	4200 Chamberlin Dr	7.50	02N10E2201400	**33.68**						
			Michael J. Oates	4240 Chamberlin Dr	38.90	02N10E2201600	**174.66**						
				Subtotal:	**46.40**			46.40	46.40				

Dukes Valley Canal

Canal/Pipeline	Diversion	Weir Valve #	Customer Name	Property Address	Irrigated Acres	Legal Description	GPM						
Chamberlin Pressure Line	4" Valve	DV04606	David Stearns	2800 Wy'east Rd	3.55	02N10E2202100	**15.94**						
			David Stearns	2860 Wy'east Rd	5.00	02N10E2202101	**22.45**						
				Subtotal:	**8.55**			8.55	8.55				
Chamberlin Pressure Line	4" Valve	DV04607	John J. Nigl	2768 Wy'east Rd	0.40	02N10E2200801	**1.80**						
			Joseph W. Sheirbon, Jr.	Chamberlin Dr	16.85	02N10E2200800	**75.66**						
				Subtotal:	**17.25**			17.25	17.25				
Chamberlin Pressure Line	4" Valve	DV04608	R & N Kirby Orchards, Inc.	2600 Wy'east Rd	0.80	02N10E2201201	**3.59**						
			R & N Kirby Orchards, Inc.	2608 Wy'east Rd	10.40	02N10E2201500	**46.70**						
			R & N Kirby Orchards, Inc.	2600 Wy'east Rd	12.00	02N10E2201200	**53.88**						
			R & N Kirby Orchards, Inc.	2604 Wy'east Rd	12.00	02N10E2201300	**53.88**						
				Subtotal:	**35.20**			35.20	35.20				
Chamberlin Pressure Line	4" Valve	DV04609	Glacier Ranch, Inc.	2584 Wy'east Rd	18.15	02N10E2201100	**81.49**						
			Robert Ross Graves	2640 Wy'east Rd	9.10	02N10E2201000	**40.86**						
			Julie E. Moe	2530 Wy'east Rd	0.85	02N10E2201102	**3.82**						
				Subtotal:	**28.10**			28.10	28.10				
Chamberlin Pressure Line	4" Valve	DV04610	Mitch McKeown	2670 Wy'east Rd	20.25	02N10E2200900	**90.92**						
				Subtotal:	**20.25**			20.25	20.25				
Chamberlin Pressure Line	2" Valve	DV04611	Randy M. Graves	2703 Wy'east Rd	5.00	02N10E22A01000	**22.45**						
				Subtotal:	**5.00**			5.00	5.00				
Chamberlin Pressure Line	3" Valve	DV04612	John F. Rust	2729 Wy'east Rd	4.80	02N10E22A01100	**21.55**						
				Subtotal:	**4.80**			4.80	4.80				
Chamberlin Pressure Line	2" Valve	DV04613	Michael J. Oates	Odell Hwy	5.80	02N10E22A00600	**26.04**						
				Subtotal:	**5.80**			5.80	5.80				
Webb Drive Line	**Valve**	**DV04800**		**Total: 36.90 Acres**									
Webb Drive Line	1" Valve	DV04801	Ruben Valle	3945 Webb Dr	2.70	02N10E22A01500	**12.12**						
				Subtotal:	**2.70**			2.70		2.70			
Webb Drive Line	1" Valve	DV04802	Victor H. Settje	2739 Wy'east Rd	1.50	02N10E22A01400	**6.74**						
				Subtotal:	**1.50**			1.50		1.50			
Webb Drive Line	Valve	DV04803	Robert B. Wilson	2765 Wy'east Rd	0.30	02N10E22A01300	**1.35**						
Not sure where gets water?			Robert B. Wilson	2749 Wy'east Rd	0.70	02N10E22A01200	**3.14**						
				Subtotal:	**1.00**			1.00		1.00			
Webb Drive Line	Valve	DV04804	Romelda Condon	2946 Webb Dr	2.60	02N10E22A01700	**11.67**						
				Subtotal:	**2.60**			2.60		2.60			
Webb Drive Line	Valve	DV04805	K20 Group, LLC	3929 Webb Dr	2.00	02N10E22A01600	**8.98**						
				Subtotal:	**2.00**			2.00		2.00			
Webb Drive Line	Valve	DV04806	Lloyd M. Thomas	3895 Webb Dr	1.00	02N10E22A01901	**4.49**						
				Subtotal:	**1.00**			1.00		1.00			

Dukes Valley Canal

Canal/Pipeline	Diversion	Weir Valve #	Customer Name	Property Address	Irrigated Acres	Legal Description	GPM						
Webb Drive Line	Valve	DV04807	John Deptuch	3871 Webb Dr	1.00	02N10E22A01900	**4.49**						
				Subtotal:	**1.00**			1.00		1.00			
Webb Drive Line	Valve	DV04808	Thomas Dahl	3881 Webb Dr	2.00	02N10E22A01800	**8.98**						
			Thomas Dahl	2756 Webb Dr	2.50	02N10E22A01801	**11.23**						
				Subtotal:	**4.50**			4.50		4.50			
Webb Drive Line	Valve	DV04809	Ben Durham	3835 Webb Dr	1.00	02N10E22A01903	**4.49**						
				Subtotal:	**1.00**			1.00		1.00			
Webb Drive Line	Valve	DV04810	Terry D. Bailey	2760 Odell Hwy	5.00	02N10E22A02000	**22.45**						
			Joseph Murphy	2763 Odell Hwy	0.40	02N10E22A02100	**1.80**						
				Subtotal:	**5.40**			5.40		5.40			
Webb Drive Line	Valve	DV04811	Dwight E. Moe	2791 Odell Hwy	5.30	02N10E22A02200	**23.80**						
			Dwight E. Moe	2705 Odell Hwy	8.90	02N10E22A00400	**39.96**						
				Subtotal:	**14.20**			14.20		14.20			
										36.90	**Webb Drive Line**		
Chamberlin Pressure Line	4" Valve	DV04614	George Imai	2671 Wy'east Rd	5.00	02N10E22A00900	**22.45**						
				Subtotal:	**5.00**			5.00	5.00				
Chamberlin Pressure Line	4" Valve	DV04615	Randy Graves	2633 Wy'east Rd	1.15	02N10E22A00700	**5.16**						
			Rick Graves	2633 Wy'east Rd	1.65	02N10E22A00701	**7.41**						
			Rob Graves	2633 Wy'east Rd	1.80	02N10E22A00702	**8.08**						
				Subtotal:	**4.60**			4.60	4.60				
Chamberlin Pressure Line	4" Valve	DV04616	Glacier Ranch, Inc.	2650 Wy'east Rd	5.90	02N10E22A00201	**26.49**						
			Michael J. Oates	2599 Wy'east Rd	19.00	02N10E22A00202	**85.31**						
				Subtotal:	**24.90**			24.90	24.90				
Chamberlin Pressure Line	2" Valve	DV04617	Carl E. Hughes	2725 Odell Hwy	~~3.10~~	02N10E22A00500	**13.92**						
		2014	*Leased Instream 1.7 ac.*	Subtotal:	**3.10**	***1.4***		3.10	3.10				
Chamberlin Pressure Line	4" Valve	DV04618	Larry Visser	2595 Odell Hwy	15.10	02N10E22A00100	**67.80**						
				Subtotal:	**15.10**			15.10	15.10				
Chamberlin Pressure Line	4" Valve	DV04619	Michael J. Oates	2590 Odell Hwy	12.90	02N10E22A00200	**57.92**						
			Michael J. Oates	2500 Odell Hwy	10.20	02N10E22A00102	**45.80**						
				Subtotal:	**23.10**			23.10	23.10				
Chamberlin Pressure Line	4" Valve	DV04620	Glacier Ranch, Inc.	2400 Odell Hwy	1.00	02N10E15D03000	**4.49**						
			Glacier Ranch, Inc.	2410 Odell Hwy	35.20	02N10E15D01800	**158.05**						
				Subtotal:	**36.20**			36.20	36.20				
Chamberlin Pressure Line	1" Valve	DV04621	Julian E. Issel	2525 Odell Hwy	0.50	02N10E15D03100	**2.25**						
			Larry L. Hilton	2399 Odell Hwy	13.80	02N10E1402500	**61.96**						
			Cindy Williams	2395 Odell Hwy	0.30	02N10E1402400	**1.35**						
				Subtotal:	**14.60**			14.60	14.60				
									409.35	**Chamberlin Pressure Line**			
Highline Canal Diversion	**Pipe**	**DV04900**		**Total: 449.50 Acres includes Shute Road & Overflow and Ackerman Hill**									
Highline Canal	WB	DV04901	Golden Mountain, LLC	3301 Gilhouley Rd	60.00	02N10E2802903	**269.40**						
				Subtotal:	**60.00**			60.00	60.00				

Dukes Valley Canal

Canal/Pipeline	Diversion	Weir Valve #	Customer Name	Property Address	Irrigated Acres	Legal Description	GPM						
Highline Canal	TO	DV04902	Gilhouley Farms, Inc.	2986 Shute Rd	0.20	02N10E2802101	**0.90**						
				Subtotal:	**0.20**			0.20	0.20				
Highline Canal	WB	DV04903	Gilhouley Farms, Inc.	3125 Gilhouley Rd	27.20	02N10E2802100	**122.13**						
				Subtotal:	**27.20**			27.20	27.20				
Highline Canal	WB	DV04904A	Jovil Galvez	3024 Gilhouley Rd	0.20	02N10E2105700	**0.90**						
			Melvin H. Picking	2984 Summit Dr	15.50	02N10E2105400	**69.60**						
			Melvin H. Picking	4665 Chamberlin Dr	9.00	02N10E2105900	**40.41**						
			Dennis W. Shute	2984 Gilhouley Rd	0.30	02N10E2105500	**1.35**						
				Subtotal:	**25.00**			25.00	25.00				
Highline Canal	WB	DV04904B	Ronald L. McNeill	2982 Shute Rd	2.60	02N10E2105201	**11.67**						
				Subtotal:	**2.60**			2.60	2.60				
Shute Road Line	**WB**	**DV05000**		**Total: 68.70 Acres includes Chamberlin Road Overflow**									
	WB	DV05000	Robert C. Duddles	4639 Summit Dr	2.00	02N10E2105200	**8.98**						
				Subtotal:	**2.00**			2.00		2.00			
Shute Road Line	2" Valve	DV05001	Natasha Bacheller	4616 Summit Dr	0.50	02N10E2103600	**2.25**						
				Subtotal:	**0.50**			0.50		0.50			
Shute Road Line	2" Valve	DV05002	Walter Jones	4596 Summit Dr	0.10	02N10E2103500	**0.45**						
				Subtotal:	**0.10**			0.10		0.10			
Shute Road Line	1" Valve	DV05003	Y. Fred Kusachi	4576 Summit Dr	0.50	02N10E2103400	**2.25**						
			Ronald J. Gehrig	4600 Summit Dr	0.10	02N10E2103501	**0.45**						
				Subtotal:	**0.60**			0.60		0.60			
Shute Road Line	Valve	DV05005	Joseph C. Sheirbon	Chamberlin Dr	15.60	02N10E2102900	**70.04**						
				Subtotal:	**15.60**			15.60		15.60			
Shute Road Line	Valve	DV05006	Adrian Chaton	4530 Chamberlin Dr	1.00	02N10E2100900	**4.49**						
				Subtotal:	**1.00**			1.00		1.00			
Chamberlin Road Line-Overflow	WB	DV05007	George M. Watanabe	4475 Chamberlin Dr	0.20	02N10E21A01700	**0.90**						
			George M. Watanabe	4339 Chamberlin Dr	19.70	02N10E2106300	**88.45**						
				Subtotal:	**19.90**			19.90		19.90			
Chamberlin Road Line-Overflow	WB	DV05008	George M. Watanabe	4475 Chamberlin Dr	19.70	02N10E2106400	**88.45**						
				Subtotal:	**19.70**			19.70		19.70			
Chamberlin Road Line-Overflow	2" Valve	DV05009	Lorene Beth	4255 Chamberlin Dr	7.80	02N10E2201800	**35.02**						
			Joseph S. Gaulke	4261 Chamberlin Dr	1.50	02N10E2201700	**6.74**						
				Subtotal:	**9.30**			9.30		9.30			
										68.70	**Shute Road Line**		
Ackerman Hill Line	**WB**	**DV05100**		**Total: 128.35 Acres**									
Ackerman Hill Line	WB	DV05101	Richard M. McCurdy	2680 Wy'east Rd	10.00	02N10E2202102	**44.90**						
				Subtotal:	**10.00**			10.00		10.00			
Ackerman Hill Line	WB	DV05102	Faith C. Ackerman	3900 Ackerman Dr	30.50	02N10E22DB00100	**136.95**						

Dukes Valley Canal

Canal/Pipeline	Diversion	Weir Valve #	Customer Name	Property Address	Irrigated Acres	Legal Description	GPM						
				Subtotal:	**30.50**			30.50		30.50			
Ackerman Hill Line	WB	DV05103	Glacier Ranch, Inc.	2923 Kusisto Rd	0.70	02N10E22DB00400	**3.14**						
			Glacier Ranch, Inc.	2923 Kusisto Rd	34.00	02N10E22DA00100	**152.66**						
			Glacier Ranch, Inc.	2650 Wy'east Rd	15.70	02N10E22DD01200	**70.49**						
			Roland L. Laughlin	2938 Odell Hwy	0.40	02N10E22DD00100	**1.80**						
			Christopher McKenzie	2800 Odell Hwy	3.20	02N10E22DA00101	**14.37**						
			Jackie Osbourn	2970 Odell Hwy	0.35	02N10E22DD00301	**1.57**						
			Nasario Rosas	2956 Odell Hwy	0.40	02N10E22DD00200	**1.80**						
			Diana L. Dilley	2891 Kusisto Rd	0.55	02N10E22DD01500	**2.47**						
			Gary M. Eastman	2961 Kusisto Rd	1.00	02N10E22DD01400	**4.49**						
				Subtotal:	**56.30**			56.30		56.30			
Ackerman Hill Line	WB	DV05104A	Felipe Marquez	3995 Ackerman Dr	3.00	02N10E22DB00200	**13.47**						
				Subtotal:	**3.00**			3.00		3.00			
		DV05104B	Dale O. Byers	3901 Ackerman Dr	1.60	02N10E22DA00301	**7.18**						
			Jan E. Tatyrek	3931 Ackerman Dr	0.40	02N10E22DB00300	**1.80**						
				Subtotal:	**2.00**			2.00		2.00			
Ackerman Hill Line	WB	DV05105	Marjorie E. Andrews	2996 Kusisto Rd	0.25	02N10E22DC01900	**1.12**						
Kusisto Road			Ashley Dames	2970 Kusisto Rd	6.70	02N10E22DC00100	**30.08**						
			Michael Benedict	2954 Kusisto Rd	0.30	02N10E22DC00202	**1.35**						
			D. Jeremy Stolhand	2950 Kusisto Rd	0.75	02N10E22DC00101	**3.37**						
			Brent C. Kusisto	2945 Kusisto Rd	0.50	02N10E22DD01300	**2.25**						
			Darrell L. Miller	3020 Kusisto Rd	0.25	02N10E22DC02100	**1.12**						
			Hisako Tamura	2984 Kusisto Rd	0.30	02N10E22DC01800	**1.35**						
			Floyd M. Walston	3030 Kusisto Rd	0.60	02N10E22DC02200	**2.69**						
			David C McHale	3010 Kusisto Rd	0.25	02N10E22DC02000	**1.12**						
				Subtotal:	**9.90**			9.90		9.90			
Ackerman Hill Line	WB	DV05106	Sandi Sholer	3816 Summit Dr	7.30	02N10E22DD01600	**32.78**						
				Subtotal:	**7.30**			7.30		7.30			
Ackerman Hill Line		DV05107	Dwight E. Moe	3756 Summit Dr	7.50	02N10E22DD01000	**33.68**						
			Dwight E. Moe	3784 Summit Dr	1.60	02N10E22DD01001	**7.18**						
			Tommy L. Heep	3024 Odell Hwy	0.25	02N10E22DD00401	**1.12**						
				Subtotal:	**9.35**			9.35		9.35			
										128.35	**Ackerman Hill Line**		
Highline Canal	WB	DV04905	Susan Kohlleppel	4675 Summit Dr	9.00	02N10E2104800	**40.41**						
				Subtotal:	**9.00**			9.00	9.00				
Highline Canal	WB	DV04906	Janet A. Somerville	2955 Dee Hwy	0.50	02N10E2104700	**2.25**						
				Subtotal:	**0.50**			0.50	0.50				
Highline Canal	WB	DV04907											
	4" Valve	DV04907A	River Rush Ranch, LLC	Dee Hwy	2.70	02N10E2001600	**12.12**						
			River Rush Ranch, LLC	3150 Dee Hwy	20.40	02N10E2900106	**91.60**						
			River Rush Ranch, LLC	3150 Dee Hwy	16.60	02N10E2900101	**74.53**						
				Subtotal:	**39.70**			39.70	39.70				

Dukes Valley Canal

Canal/Pipeline	Diversion	Weir Valve #	Customer Name	Property Address	Irrigated Acres	Legal Description	GPM						
	4" Valve	DV04907B	Grant Porter	3002 Dee Hwy	~~19.60~~	02N10E2002202	**88.00**						
		2014	*Porter Temp. Transfer 3.1 ac.*		*22.70*								
			Steve G. Samkow, Trustee	3350 Dee Hwy	19.40	02N10E2002203	**87.11**						
				Subtotal:	**39.00**			39.00	39.00				
Highline Canal	TO	DV04908	Tracey Blakeslee	3131 Dee Hwy	0.10	02N10E2900200	**0.45**						
				Subtotal:	**0.10**			0.10	0.10				
Highline Canal	WB to Valve	DV04909	RiverSong, LLC	3226 Dee Hwy	18.70	02N10E2900107	**83.96**						
			Brian Camastral	Subtotal:	**18.70**			18.70	18.70				
Highline Canal	TO to 4"	DV04910	Michael Schrankel	3441 Dee Hwy	0.50	02N10E2900502	**2.25**						
	Valve			Subtotal:	**0.50**			0.50	0.50				
Highline Canal	TO	DV04911	Arthur Chenoweth	3351 Dee Hwy	0.10	02N10E2900507	**0.45**						
				Subtotal:	**0.10**			0.10	0.10				
Highline Canal	TO	DV04912	John Bailey	3347 Dee Hwy	0.10	02N10E2900511	**0.45**						
				Subtotal:	**0.10**			0.10	0.10				
Highline Canal	TO	DV04913	Samuel C. Doak	3401 Dee Hwy	0.20	02N10E2900512	**0.90**						
				Subtotal:	**0.20**			0.20	0.20				
Highline Canal	TO	DV04914	Brent R. Ocheskey	3425 Dee Hwy	0.50	02N10E2900501	**2.25**						
				Subtotal:	**0.50**			0.50	0.50				
Highline Canal	TO	DV04915	Rory Streeter	3441 Dee Hwy	0.50	02N10E2900503	**2.25**						
				Subtotal:	**0.50**			0.50	0.50				
Highline Canal	WB	DV04916	Bradley D. Hoyt	3386 Dee Hwy	3.00	02N10E2900500	**13.47**						
			Douglas J. Reichel	3400 Dee Hwy	10.00	02N10E2900600	**44.90**						
				Subtotal:	**13.00**			13.00	13.00				
Highline Canal	TO	DV04917	Kevin Charles Codol	3325 James Rd	0.50	02N10E2900700	**2.25**						
				Subtotal:	**0.50**			0.50	0.50				
Highline Canal	TO	DV04918	Steven Jones	3320 James Rd	2.00	02N10E2900900	**8.98**						
				Subtotal:	**2.00**			2.00	2.00				
Highline Canal	WB	DV04919	Leta E. Riggleman	3565 Dee Hwy	0.25	02N10E3000900	**1.12**						
	3" Valve	DV04919a	Jeffery D. Jones	3522 Dee Hwy	12.80	02N10E3000800	**57.47**			449.50			
				Subtotal:	**13.05**			13.05	13.05				
									252.45	**HighLine Canal**			
								1905.10	**TOTAL**				

Dukes Valley Canal

Canal/Pipeline	Diversion	Weir Valve #	Customer Name	Property Address	Irrigated Acres	Legal Description	GPM						
Dukes Valley System		Acres											
Dukes Valley System		**1905.10**											
Dukes Valley Canal		281.85											
Cameron Hill Line		100.80											
Cherry Hill Line		25.90											
Sheirbon Hill Line		106.95											
Marsh/Chamberlin Line Diversion		**431.05**	includes Iwatsuki Diversion										
Marsh/Chamberlin Line		42.70											
Sweet Line		55.35											
Rock Acres Line		39.85											
Wheeler Road Line		48.25											
Iwatsuki Box Diversion		**244.90**											
Summit Road Line - Overflow		79.70											
Bartlett Loop Line		14.10											
Wy'east Road Line - North/South		29.10											
Wy'east School Line - Overflow		122.00											
Chamberlin Pressure Line Diversion		**509.05**											
Chamberlin Pressure Line		409.35											
Poole Line		62.80											
Webb Drive Line		36.90											
Highline Canal Diversion		**449.5**											
Highline Canal		252.45											
Shute Road Line		68.70											
Ackerman Hill Line		128.35											

Dukes Valley Canal

Canal/Pipeline	Diversion	Weir Valve #	Customer Name	Property Address	Irrigated Acres	Legal Description	GPM						
				Total: Acres									
			Golden Mountain, LLC										
Chamberlain Line	WB	DV 0											
				Subtotal:	**20.80**								
Chamberlain Line	WB	DV 0											

DUKES VALLEY CANAL
Bartlett Loop - Outside

Pipeline	Diversion	Weir Valve	Customer Name	Property Address	Irrigated Acres	Legal Description	GPM
Bartlett Loop Line	**2" Valve**	**DV04303**	Campos, Jaime D.	4123 Bartlett Dr.	0.15	2N-10-27BA:6200	0.67
Outside Patrons			Castro, Rosa Maria	4079 Bartlett Dr.	0.15	2N-10-27BA:5300	0.67
			Chavarria, Eliseo	4007 Bartlett Dr.	0.15	2N-10-27BA:4300	0.67
			Daniels, Paul G.	4085 Bartlett Dr.	0.15	2N-10-27BA:5400	0.67
			De La Torre, Juan M.	4035 Bartlett Dr.	0.15	2N-10-27BA:4700	0.67
			Del Rosario Cardenas, Maria	4041 Bartlett Dr.	0.15	2N-10-27BA:4800	0.67
			Elliott, Clifford S.	4015 Bartlett Dr.	0.15	2N-10-27BA:4400	0.67
			Gamboa, Fidel	4065 Bartlett Dr.	0.15	2N-10-27BA:5100	0.67
			Glenn, James F.	4049 Bartlett Dr.	0.15	2N-10-27BA:4900	0.67
			Lorengel, Ldee	4095 Bartlett Dr.	0.15	2N-10-27BA:5700	0.67
			Marquez, Juan L.	4137 Bartlett Dr.	0.15	2N-10-27BA:6400	0.67
			Meza, Adalberto	4129 Bartlett Dr.	0.15	2N-10-27BA:6300	0.67
			Murillo, Gerardo	4109 Bartlett Dr.	0.15	2N-10-27BA:6000	0.67
			Riggleman, Debra M.	4091 Bartlett Dr.	0.20	2N-10-27BA:5600	0.90
			Shewey, Beatrice A.	4071 Bartlett Dr.	0.15	2N-10-27BA:5200	0.67
			Shewey, Bobby	4029 Bartlett Dr.	0.15	2N-10-27BA:4600	0.67
			Solis, Obaldo	4023 Bartlett Dr.	0.15	2N-10-27BA:4500	0.67
			Solorzano, Meriah	4099 Bartlett Dr.	0.15	2N-10-27BA:5800	0.67
			Springer, Steven A.	4115 Bartlett Dr.	0.15	2N-10-27BA:6100	0.67
			Villafana, Miguel	4057 Bartlett Dr.	0.15	2N-10-27BA:5000	0.67
			Windsor, Stanley	4103 Bartlett Dr.	0.15	2N-10-27BA:5900	0.67
				Total	**3.20**		**14.37**

DUKES VALLEY CANAL
Bartlett Loop - Inside

Pipeline	Diversion	Weir Valve	Customer Name	Property Address	Irrigated Acres	Legal Description	GPM
Bartlett Loop Line	**2" Valve**	**DV04302**	Bolanos Guzman, Yuridia	4045 Bartlett Loop	0.15	2N-10-27BA:3000	0.67
Inside Patrons			Carter, Linda C.	4138 Bartlett Dr.	0.15	2N-10-27BA:900	0.67
			Cervantes, Rosa	4067 Bartlett Loop	0.15	2N-10-27BA:3300	0.67
			Coon, Larry D.	4037 Bartlett Loop	0.15	2N-10-27BA:2900	0.67
			Espinosa, Adan	4046 Bartlett Loop	0.15	2N-10-27BA:1500	0.67
			Farlow, Bonnie K.	4038 Bartlett Loop	0.15	2N-10-27BA:1700	0.67
			Ford, Lori E. Ann	3076 Wy'east Rd.	0.15	2N-10-27BA:2000	0.67
			Gandara, Reynaldo M.	4046 Bartlett Dr.	0.15	2N-10-27BA:4000	0.67
			Heath, David E.	4045 Summit Dr.	0.20	2N-10-27BA:500	0.90
			Henderson, Brent A.	4070 Bartlett Dr.	0.15	2N-10-27BA:3700	0.67
			Hernandez, Erica	4039 Summit Dr.	0.20	2N-10-27BA:400	0.90
			Hobbs, Pat E.	4053 Summit Dr.	0.20	2N-10-27BA:600	0.90
			Jans, Sharon S.	4025 Summit Dr.	0.20	2N-10-27BA:200	0.90
			Jensen, Lester	4079 Bartlett Loop	0.15	2N-10-27BA:3400	0.67
			Lee, Gayle A.	4076 Bartlett Loop	0.15	2N-10-27BA:3600	0.67
			Macias, Felicia	4059 Bartlett Loop	0.15	2N-10-27BA:3200	0.67
			Magana, Blake G.	4022 Bartlett Dr.	0.15	2N-10-27BA:2600	0.67
			Marquez, Miriam	4130 Bartlett Dr.	0.15	2N-10-27BA:1000	0.67
			Martinez, Ricardo	4020 Bartlett Loop	0.15	2N-10-27BA:2700	0.67
			McClellan, Virginia I.	4021 Summit Dr.	0.20	2N-10-27BA:100	0.90
			Miller, Steven Ray	3082 Wy'east Rd.	0.15	2N-10-27BA:2100	0.67
			Miramontes, Salvador	4068 Bartlett Loop	0.15	2N-10-27BA:1200	0.67
			Munoz, Jaime	3090 Wy'east Rd.	0.15	2N-10-27BA:2200	0.67
			Munoz, Seferino	4001 Summit Dr.	0.25	2N-10-27BA:101	1.12
			Nichols, Dwight	4060 Bartlett Loop	0.15	2N-10-27BA:1300	0.67
			Perez, Javier Avila	4100 Bartlett Loop	0.15	2N-10-27BA:3500	0.67
			Perez, Pablo A.	4034 Bartlett Loop	0.15	2N-10-27BA:1900	0.67
			Reyes, Valentin	4014 Bartlett Dr.	0.15	2N-10-27BA:2500	0.67
			Rojas, Juan	4054 Bartlett Loop	0.15	2N-10-27BA:1400	0.67
			Romero, Enrique	4036 Bartlett Dr.	0.15	2N-10-27BA:4200	0.67
			Salamanca, Ramon	4026 Bartlett Loop	0.15	2N-10-27BA:2800	0.67
			Serrano, Raul	4054 Bartlett Dr.	0.15	2N-10-27BA:3900	0.67
			Sigl, Adam C.	4060 Bartlett Dr.	0.15	2N-10-27BA:3800	0.67
			Smiley, Jason	4040 Bartlett Loop	0.15	2N-10-27BA:1600	0.67
			Smiley, Karl G.	4061 Summit Dr.	0.20	2N-10-27BA:700	0.90
			Smiley, Truman L.	4077 Summit Dr.	0.20	2N-10-27BA:800	0.90
			Thomas, Jerry D.	4033 Summit Dr.	0.20	2N-10-27BA:300	0.90

DUKES VALLEY CANAL
Bartlett Loop - Inside

Pipeline	Diversion	Weir Valve	Customer Name	Property Address	Irrigated Acres	Legal Description	GPM
			Ugarte, Gabriela	4120 Bartlett Dr.	0.20	2N-10-27BA:1100	0.90
			Valdez, Jose T.	3088 Wy'east Rd.	0.15	2N-10-27BA:2300	0.67
			Varga, Robert J.	4008 Bartlett Dr.	0.15	2N-10-27BA:2400	0.67
			Webb, Adam	4017 Bartlett Loop	0.15	2N-10-27BA:4100	0.67
			Woody, John W.	4036 Bartlett Loop	0.15	2N-10-27BA:1800	0.67
			Yaw, Robert	4053 Bartlett Loop	0.15	2N-10-27BA:3100	0.67
				Total	**7.00**		**31.43**

CENTRAL SYSTEM
Holly Meadows HA

Pipeline	Diversion	Weir Valve	Customer Name	Property Address	Irrigated Acres	Legal Description	GPM
Shaw Line	**2" Valve**	**C03906**	**Holly Meadows Subdivision**				
			Rosas, Nasario	3600 Jones Loop	0.15	2N-10-26BA:900	0.67
			Romero, Cesar	3590 Jones Loop	0.15	2N-10-26BA:1000	0.67
			Bibian, Jose	3584 Jones Loop	0.15	2N-10-26BA:1100	0.67
			Serrano, Rene -	3578 Jones Loop	0.15	2N-10-26BA:1200	0.67
			Hanshaw, William	3572 Jones Loop	0.15	2N-10-26BA:1300	0.67
			Harjo, Erich	3564 Jones Loop	0.25	2N-10-26BA:1400	1.12
			Cortes, Jorge A.	3558 Jones Loop	0.25	2N-10-26BA:1500	1.12
			Springer, Thomas	3552 Jones Loop	0.15	2N-10-26BA:1600	0.67
			HRV Group -	3546 Jones Loop	0.15	2N-10-26BA:1700	0.67
			Vega, Celedonio	3540 Jones Loop	0.15	2N-10-26BA:1800	0.67
			Cazares, Ruben Lopez	3536 Jones Loop	0.15	2N-10-26BA:1900	0.67
			Hernandez, Maricela	3530 Jones Loop	0.25	2N-10-26BA:2000	1.12
			Klantchnek, Randy	3526 Jones Loop	0.20	2N-10-26BA:2200	0.90
			Stintzi, Heath	3520 Jones Loop	0.15	2N-10-26BA:2300	0.67
			Story, Simeon B.	3514 Jones Loop	0.15	2N-10-26BA:2400	0.67
			Nieport, Braden	3508 Jones Loop	0.15	2N-10-26BA:2500	0.67
			Johnson, Randall S.	3529 Jones Loop	0.15	2N-10-26BA:2600	0.67
			Colwell, Kayla	3541 Jones Loop	0.15	2N-10-26BA:2700	0.67
			Flores, Israel	3549 Jones Loop	0.15	2N-10-26BA:2800	0.67
			Ramirez, Sonia Lachino	3555 Jones Loop	0.15	2N-10-26BA:2900	0.67
			HRV Group	3095 Tamarack Rd.	0.15	2N-10-26BA:3000	0.67
			Martinez, Marco	3105 Tamarack Rd.	0.15	2N-10-26BA:3100	0.67
			Caldera, Alfredo	3115 Tamarack Rd.	0.15	2N-10-26BA:3200	0.67
			Kaiser, Richard D.	3125 Tamarack Rd.	0.15	2N-10-26BA:3300	0.67
			Wood, Colin	3605 Jones Loop	0.15	2N-10-26BA:3400	0.67
			Flores, Miguel Najera	3100 Tamarack Rd.	0.15	2N-10-26BA:3500	0.67
			Centeno, Patricia	3110 Tamarack Rd.	0.15	2N-10-26BA:3600	0.67
			Magana, Juan	3130 Tamarack Rd.	0.15	2N-10-26BA:3700	0.67
			Quintana, Leocadia	3120 Tamarack Rd.	0.15	2N-10-26BA:3800	0.67
			Ramirez, Enrique	3140 Tamarack Rd.	0.15	2N-10-26BA:3900	0.67
			Lot 00-Planter Strip		0.35	2N-10-26B:00	1.57
				Total	**5.20**		**23.35**

CENTRAL SYSTEM
Anna Acres HA

Pipeline	Diversion	Weir Valve	Customer Name	Property Address	Irrigated Acres	Legal Description	GPM
Shaw Line	**2" Valve**	**C03910**	**Anna Acres HA**				
			Gilberto Evangelista	3150 Tamarack Rd.	0.15	2N-10-26BA:4000	0.67
			Maria Diaz	3162 Tamarack Rd.	0.15	2N-10-26BA:4100	0.67
			Nancilee Edwards	3168 Tamarack Rd.	0.15	2N-10-26BA:4200	0.67
			Ruben Valle-Guzman	3217 Maple Rd.	0.15	2N-10-26BC:7300	0.67
			Jose Perez	3203 Maple Rd.	0.15	2N-10-26BC:7400	0.67
			Guadalupe Vazquez	3200 Maple Rd.	0.15	2N-10-26BC:7500	0.67
			Alfonso Ledesma	3190 Maple Rd.	0.20	2N-10-26BC:7600	0.90
			Claudio G. Munoz	3180 Maple Rd.	0.15	2N-10-26BC:7700	0.67
			Maria Ancheita-Reyes	3185 Maple Rd.	0.15	2N-10-26BC:7800	0.67
			J. Santos Oropeza	3195 Maple Rd.	0.15	2N-10-26BC:7900	0.67
			Storage Property		0.35	2N-10-26BD:2403	1.57
			Juan Magana	3555 Cedar Dr.	0.15	2N-10-26BD:2404	0.67
			Aurelio Aguilera	3545 Cedar Dr.	0.15	2N-10-26BD:2405	0.67
			Royal F. Ewing	3535 Cedar Dr.	0.15	2N-10-26BD:2406	0.67
			Enrique Manzo	3525 Cedar Dr.	0.15	2N-10-26BD:2407	0.67
			Javier Zarate	3200 Tamarack Rd.	0.15	2N-10-26BD:2408	0.67
			Denise Campos	3210 Tamarack Rd.	0.15	2N-10-26BD:2409	0.67
			Manuel Trejo	3209 Tamarack Rd.	0.15	2N-10-26BD:2410	0.67
			Pablo Ramirez	3201 Tamarack Rd.	0.15	2N-10-26BD:2411	0.67
			Crecencio Avila	3193 Tamarack Rd.	0.15	2N-10-26BD:2412	0.67
			Rene Guitierrez	3187 Tamarack Rd.	0.15	2N-10-26BD:2413	0.67
			Antonio Rodriguez	3180 Tamarack Rd.	0.15	2N-10-26BD:2418	0.67
			Gilberto Santillan	3520 Cedar Dr.	0.15	2N-10-26BD:2419	0.67
			Francisco Magana Melchor	3530 Cedar Dr.	0.15	2N-10-26BD:2420	0.67
			Juan M. Muro	3540 Cedar Dr.	0.15	2N-10-26BD:2421	0.67
			Luis M. Jimenez	3550 Cedar Dr.	0.15	2N-10-26BD:2422	0.67
				Total	**4.15**		**18.63**

CENTRAL SYSTEM
Ewe I HA

Pipeline	Diversion	Weir Valve	Customer Name	Property Address	Irrigated Acres	Legal Description	GPM
Shaw Line	2" Valve	C03909	Ewe & I HA				
			Elizonodo, Janette	3185 Farwig Rd.	0.15	2N-10-26BB:1000	0.67
			Ramirez, Manuel	3575 Homestead Dr.	0.15	2N-10-26BB:1014	0.67
			Bradberry, Keri	3615 Homestead Dr.	0.15	2N-10-26BB:1015	0.67
			Magana, Erika	3620 Homestead Dr.	0.15	2N-10-26BB:1016	0.67
			Ashbaugh, Kenneth	3635 Homestead Dr.	0.15	2N-10-26BB:1017	0.67
			Rojas, Elizabeth	3625 Homestead Dr.	0.15	2N-10-26BB:1018	0.67
			Krohn, Dan	3600 Homestead Dr.	0.15	2N-10-26BB:1019	0.67
			Claflin, Ralph	3630 Homestead Dr.	0.15	2N-10-26BB:1020	0.67
			Torres, Javier	3175 Farwig Rd.	0.15	2N-10-26BB:1021	0.67
			Fellows, Mark	3640 Homestead Dr.	0.15	2N-10-26BB:1022	0.67
			Ortiz-Arreola, Fabiel	3605 Homestead Dr.	0.15	2N-10-26BB:1023	0.67
			Munoz, Jesus	3165 Farwig Rd.	0.15	2N-10-26BB:1024	0.67
			Pratt, Ryan	3155 Farwig Rd.	0.15	2N-10-26BB:1025	0.67
			Wright, Elizabeth	3145 Farwig Rd.	0.15	2N-10-26BB:1026	0.67
			Elias, Nora	3135 Farwig Rd.	0.15	2N-10-26BB:1027	0.67
			Gehrman, Judy	3125 Farwig Rd.	0.25	2N-10-26BB:1028	1.12
			Farwig, Jeanne	3115 Farwig Rd.	0.35	2N-10-26BB:1029	1.57
			Durst, Tim	3110 Farwig Rd.	0.30	2N-10-26BB:1030	1.35
			Rueda, Enrique Ambrocio	3120 Farwig Rd.	0.15	2N-10-26BB:1031	0.67
			Castillo, Jorge	3612 Vance Dr.	0.15	2N-10-26BB:1032	0.67
			Ventura, Marco	3602 Vance Dr.	0.15	2N-10-26BB:1033	0.67
			Drennan, Jimmy	3603 Vance Dr.	0.15	2N-10-26BB:1034	0.67
			Galvan, Hilda	3609 Vance Dr.	0.15	2N-10-26BB:1035	0.67
			Sedano, Jamie	3585 Homestead Dr.	0.15	2N-10-26BB:1036	0.67
			Diaz, German	3610 Homestead Dr.	0.15	2N-10-26BB:1037	0.67
			Burgess, Chris	3595 Homestead Dr.	0.15	2N-10-26BB:1038	0.67
			Munoz, Reymundo	3690 Homestead Dr.	0.30	2N-10-26BB:1600	1.35
			Contreras, Rafael	3680 Homestead Dr.	0.20	2N-10-26BB:1800	0.90
			Mendiola, Juan	3670 Homestead Dr.	0.20	2N-10-26BB:1900	0.90
			Reinhardt, Loree	3660 Homestead Dr.	0.15	2N-10-26BB:2001	0.67
			Torres, Raymundo	3650 Homestead Dr.	0.15	2N-10-26BB:2100	0.67
			Sandoval, Alejandro	3645 Homestead Dr.	0.15	2N-10-26BB:2200	0.67
			South, Leonard	3655 Homestead Dr.	0.15	2N-10-26BB:2300	0.67
			Jimenez, Esperanza	3675 Homestead Dr.	0.15	2N-10-26BB:2400	0.67
			Mascorro, Joel	3685 Homestead Dr.	0.15	2N-10-26BB:2500	0.67
			Silva, Bertha	3695 Homestead Dr.	0.15	2N-10-26BB:2600	0.67
			Acosta, Fidel	3705 Homestead Dr.	0.20	2N-10-26BB:2700	0.90

CENTRAL SYSTEM
Ewe I HA

Pipeline	Diversion	Weir Valve	Customer Name	Property Address	Irrigated Acres	Legal Description	GPM
			Macias, Antonio	3670 Mud Alley Dr.	0.15	2N-10-26BC:600	0.67
			Peterson, Irene	3678 Mud Alley Dr.	0.25	2N-10-26BC:700	1.12
			Rood, Ted	3686 Mud Alley Dr.	0.30	2N-10-26BC:800	1.35
			Thompson, Christopher	3692 Mud Alley Dr.	0.20	2N-10-26BC:900	0.90
				Total	**7.20**		**32.33**

CENTRAL SYSTEM
Whitesell UG

Pipeline	Diversion	Weir Valve	Customer Name	Property Address	Irrigated Acres	Legal Description	GPM
Shaw Line	**1" Valve**	**C03911a**	**Whitesell UG**				
			Manzo, Enrique	3220 Maple Rd.	0.15	2N-10-26BC:5000	0.67
			Manzo, Enrique	3220 Maple Rd.	0.15	2N-10-26BC:5001	0.67
			Torres, Raymundo	3228 Maple Rd.	0.15	2N-10-26BC:5100	0.67
			Gonzales, Salvador	3236 Maple Rd.	0.15	2N-10-26BC:5200	0.67
			Coon, Eddie	3244 Maple Rd.	0.15	2N-10-26BC:5300	0.67
			Magana, Victor	3639 Beachwood Dr.	0.15	2N-10-26BC:5400	0.67
			Schultz, Joseph	3631 Beechwood Dr.	0.15	2N-10-26BC:5500	0.67
			Gonzallez, Otilio	3223 Maple Rd.	0.15	2N-10-26BC:5600	0.67
			Valle, Ruben	3217 Maple Rd.	0.15	2N-10-26BC:5700	0.67
			Elizondo, Eliseo	3628 Beachwood Dr.	0.15	2N-10-26BC:5800	0.67
			White, Tyler	3212 Tamarack Rd.	0.15	2N-10-26BD:1400	0.67
			Robles-Flores, Jose	3222 Tamarack Rd.	0.15	2N-10-26BD:1500	0.67
			Hale, Michael	3592 Beachwood Dr.	0.15	2N-10-26BD:1600	0.67
			Gordiano, Lorenzo	3600 Beachwood Dr.	0.15	2N-10-26BD:1700	0.67
			Torres, Maximino	3612 Beachwood Dr.	0.15	2N-10-26BD:1800	0.67
			Davis, Terry	3620 Beachwood Dr.	0.15	2N-10-26BD:1900	0.67
			Torres, Juana	3623 Beachwood Dr.	0.15	2N-10-26BD:3100	0.67
				Total	**2.55**		**11.45**

CENTRAL SYSTEM
McCormick UG

Pipeline	Diversion	Weir Valve	Customer Name	Property Address	Irrigated Acres	Legal Description	GPM
Shaw Line	**2" Valve**	**C03902a**	**McCormick UG**				
			Marquez, Miguel	3223 Midway Rd.	0.15	2N-10-26BD:300	0.67
			Galvez, Uziel	3427 Chevron Dr.	0.15	2N-10-26BD:301	0.67
			Avalos, Jose Manuel	3220 Midway Rd.	0.15	2N-10-26BD:302	0.67
			Salas, Antonio	3218 Midway Rd.	0.15	2N-10-26BD:303	0.67
			Munoz, Martin	3200 Midway Rd.	0.15	2N-10-26BD:304	0.67
			Cuevas, Javier	3196 Midway Rd.	0.15	2N-10-26BD:305	0.67
			Annala, Wayne	3190 Midway Rd.	0.15	2N-10-26BD:306	0.67
			Lara, Ignacio	3188 Midway Rd.	0.15	2N-10-26BD:307	0.67
			Nolasco, Alvaro	3186 Midway Rd.	0.15	2N-10-26BD:308	0.67
			Munoz, Jesus	3184 Midway Rd.	0.15	2N-10-26BD:309	0.67
			Virgen, Pedro	3180 Midway Rd.	0.15	2N-10-26BD:310	0.67
			Serrano, Ubaldo	3176 Midway Rd.	0.15	2N-10-26BD:312	0.67
			Munoz, Jose G. & Maria M.	3172 Midway Rd.	0.15	2N-10-26BD:313	0.67
			Schneeberg, Rita	3170 Midway Rd.	0.15	2N-10-26BD:314	0.67
			Ziegner, Luis	3166 Midway Rd.	0.15	2N-10-26BD:315	0.67
			Mallon, Chris	3162 Midway Rd.	0.15	2N-10-26BD:316	0.67
			Gutierrez, Maximino	3160 Midway Rd.	0.15	2N-10-26BD:317	0.67
			Leon, Jose Francisco	3185 Midway Rd.	0.15	2N-10-26BD:318	0.67
			Rodriguez, Juan	3421 Gateway Dr.	0.15	2N-10-26BD:319	0.67
			Cuevas, Jorge	3417 Gateway Dr.	0.15	2N-10-26BD:320	0.67
			Sonato Valerio, Leopoldo	3415 Gateway Dr.	0.15	2N-10-26BD:321	0.67
			Manzo, Griselda	3413 Gateway Dr.	0.15	2N-10-26BD:322	0.67
			Mendiola, Jose	3411 Gateway Dr.	0.15	2N-10-26BD:323	0.67
			Alaniz, Erasmo	3186 Lingren Rd.	0.20	2N-10-26BD:324	0.90
			Zuniga, Carmen	3188 Lingren Rd.	0.20	2N-10-26BD:325	0.90
			Virgen, Marcelino	3405 Gateway Dr.	0.15	2N-10-26BD:326	0.67
			Ascencio, Jaime M.	3190 Lingren Rd.	0.20	2N-10-26BD:327	0.90
			Ortiz, Jose	3400 Gateway Dr.	0.25	2N-10-26BD:328	1.12
			Marquez, Jr. Raul A .	3402 Gateway Dr.	0.20	2N-10-26BD:329	0.90
			Reyes, Federico B.	3404 Gateway Dr.	0.20	2N-10-26BD:330	0.90
			Martinez, Victor	3408 Gateway Dr.	0.15	2N-10-26BD:331	0.67
			Nagreen, William	3412 Gateway Dr.	0.15	2N-10-26BD:332	0.67
			Magana, Miguel & Yolanda	3416 Gateway Dr.	0.15	2N-10-26BD:333	0.67
			Nunez Castillo, Guadalupe	3420 Gateway Dr.	0.15	2N-10-26BD:334	0.67
			Lachino, Jaime	3195 Midway Rd.	0.15	2N-10-26BD:335	0.67
			Pearo, Sara	3199 Midway Rd.	0.15	2N-10-26BD:336	0.67
			Salas, Manuel	3423 Courtway Dr.	0.15	2N-10-26BD:337	0.67

CENTRAL SYSTEM
McCormick UG

Pipeline	Diversion	Weir Valve	Customer Name	Property Address	Irrigated Acres	Legal Description	GPM
			Marquez, Daniel	3419 Courtway Dr.	0.15	2N-10-26BD:338	0.67
			Muro, Vicente	3417 Courtway Dr.	0.15	2N-10-26BD:339	0.67
			Bobadilla, Gerardo	3413 Courtway Dr.	0.15	2N-10-26BD:340	0.67
			Serrano, Juan F.	3221 Midway Rd.	0.15	2N-10-26BD:341	0.67
			Stanton, Nathan	3222 Midway Rd.	0.20	2N-10-26BD:400	0.90
				Total	**6.70**		**30.08**

Appendix 3

District Transmission Canal Pipeline Maps

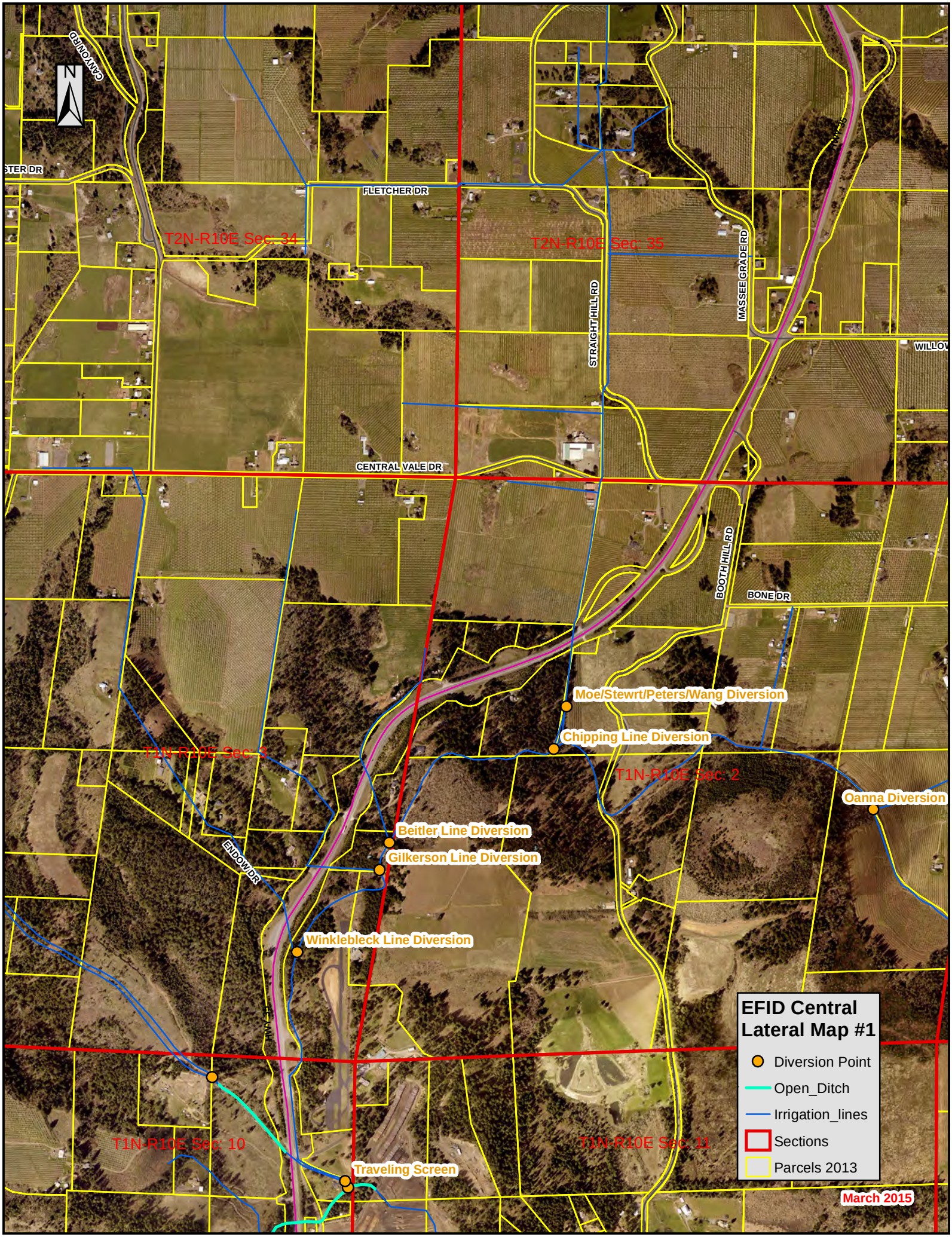
EFID Central Lateral Map #1
Diversion Point
Open_Ditch
Irrigation_lines
Sections
Parcels 2013
March 2015
T2N-R10E Sec: 34
T2N-R10E Sec: 35
T1N-R10E Sec: 3
T1N-R10E Sec: 2
T1N-R10E Sec: 10
T1N-R10E Sec: 11
Moe/Stewrt/Peters/Wang Diversion
Chipping Line Diversion
Oanna Diversion
Beitler Line Diversion
Gilkerson Line Diversion
Winklebleck Line Diversion
Traveling Screen
FLETCHER DR
CENTRAL VALE DR
STRAIGHT HILL RD
MASSEE GRADE RD
BOOTH HILL RD
BONE DR
ENDOW DR
CANYON RD
N

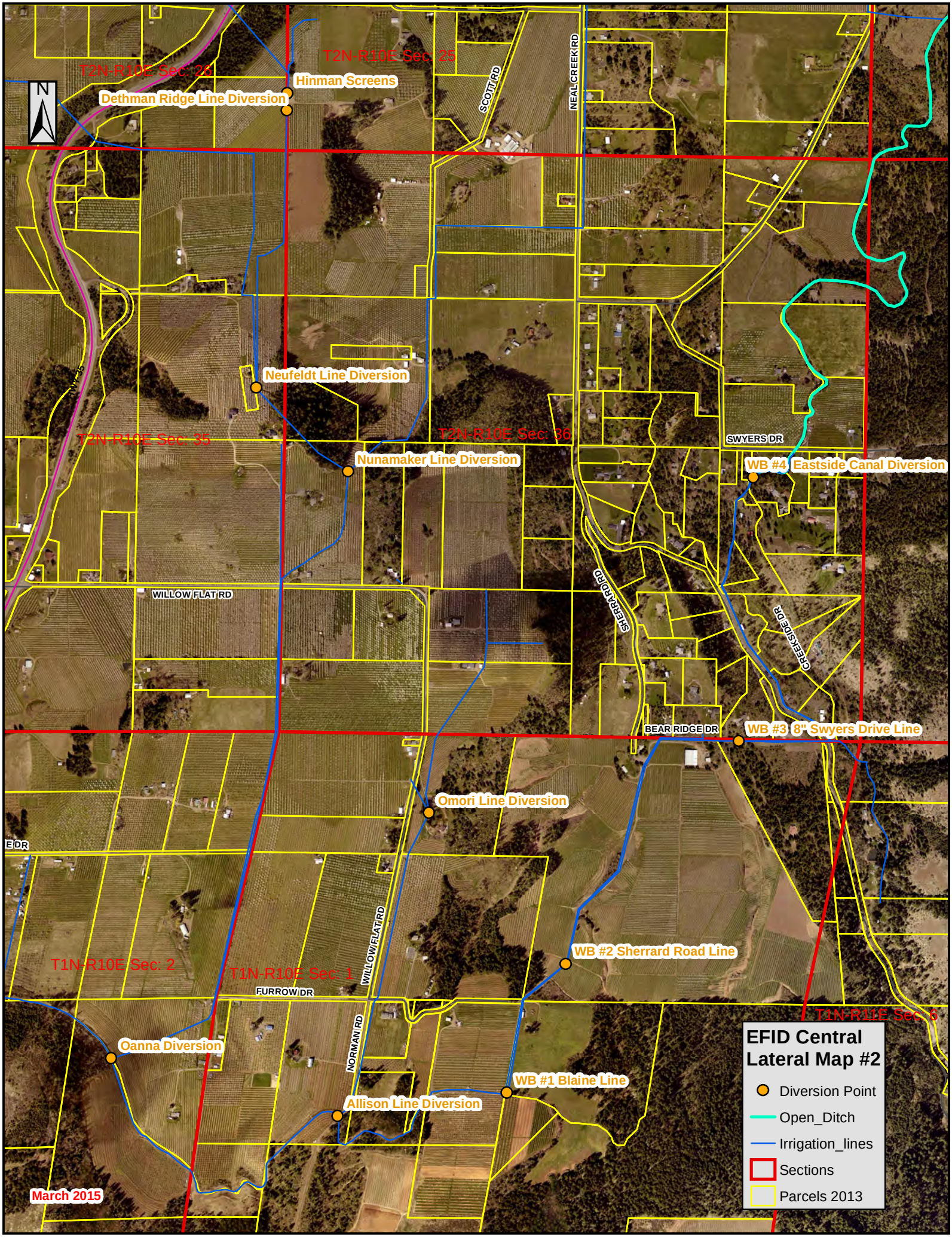
T2N-R10E Sec: 25
T2N-R10E Sec: 25
Hinman Screens
Dethman Ridge Line Diversion
SCOTT RD
NEAL CREEK RD
N
Neufeldt Line Diversion
T2N-R10E Sec: 35
T2N-R10E Sec: 36
Nunamaker Line Diversion
SWYERS DR
WB #4 Eastside Canal Diversion
WILLOW FLAT RD
SHERRARD RD
CREEKSIDE DR
BEAR RIDGE DR
WB #3 8" Swyers Drive Line
Omori Line Diversion
E DR
WILLOW FLAT RD
WB #2 Sherrard Road Line
T1N-R10E Sec: 2
T1N-R10E Sec: 1
FURROW DR
T1N-R11E Sec: 6
Oanna Diversion
NORMAN RD
WB #1 Blaine Line
Allison Line Diversion
March 2015
EFID Central Lateral Map #2
Diversion Point
Open_Ditch
Irrigation_lines
Sections
Parcels 2013

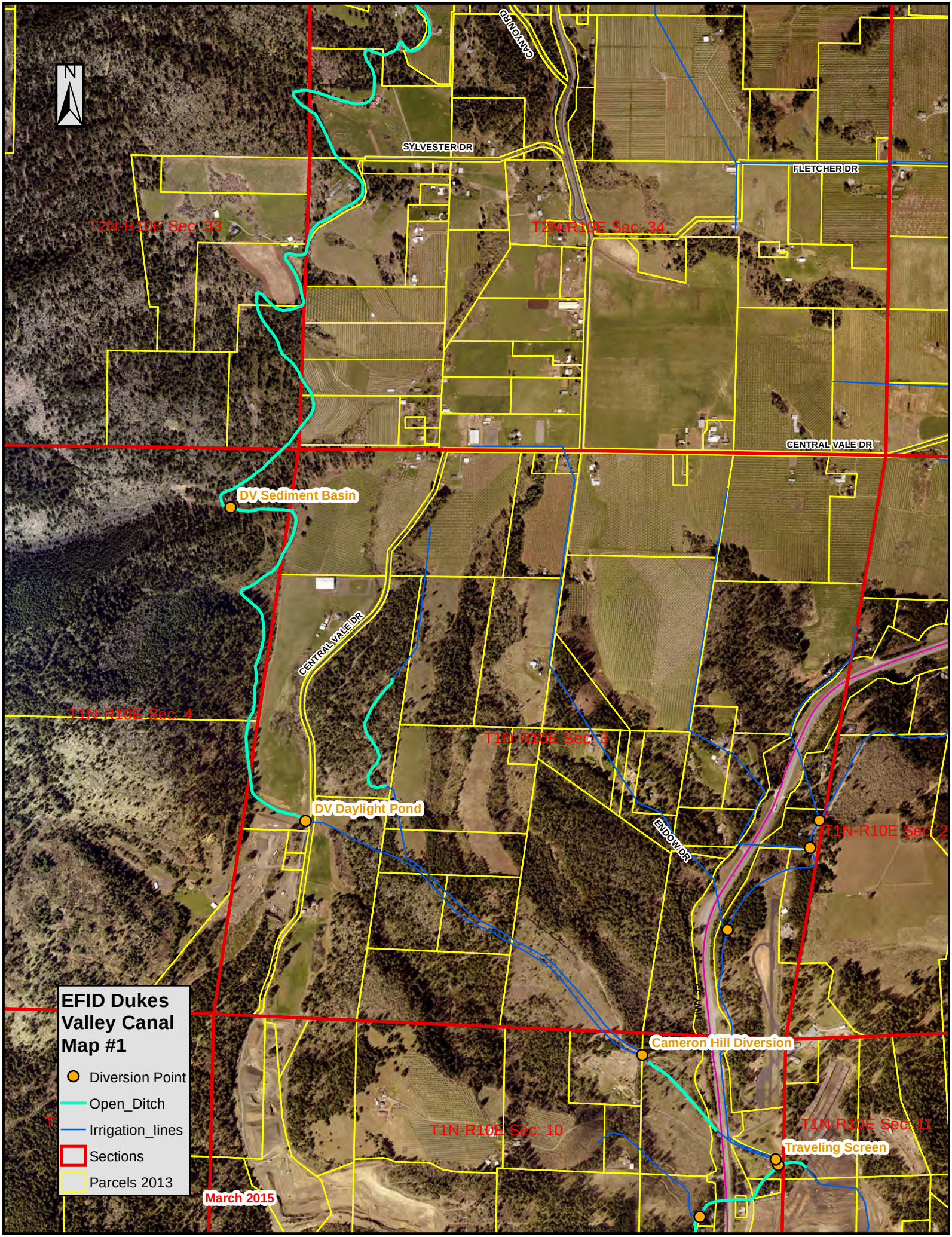
N
CANYON RD
SYLVESTER DR
FLETCHER DR
T2N-R10E Sec. 33
T2N-R10E Sec. 34
CENTRAL VALE DR
DV Sediment Basin
CENTRAL VALE DR
T1N-R10E Sec. 4
T1N-R10E Sec. 3
DV Daylight Pond
ENDOW DR
T1N-R10E Sec. 2
Cameron Hill Diversion
T1N-R10E Sec. 10
T1N-R10E Sec. 11
Traveling Screen
EFID Dukes Valley Canal Map #1
Diversion Point
Open_Ditch
Irrigation_lines
Sections
Parcels 2013
March 2015

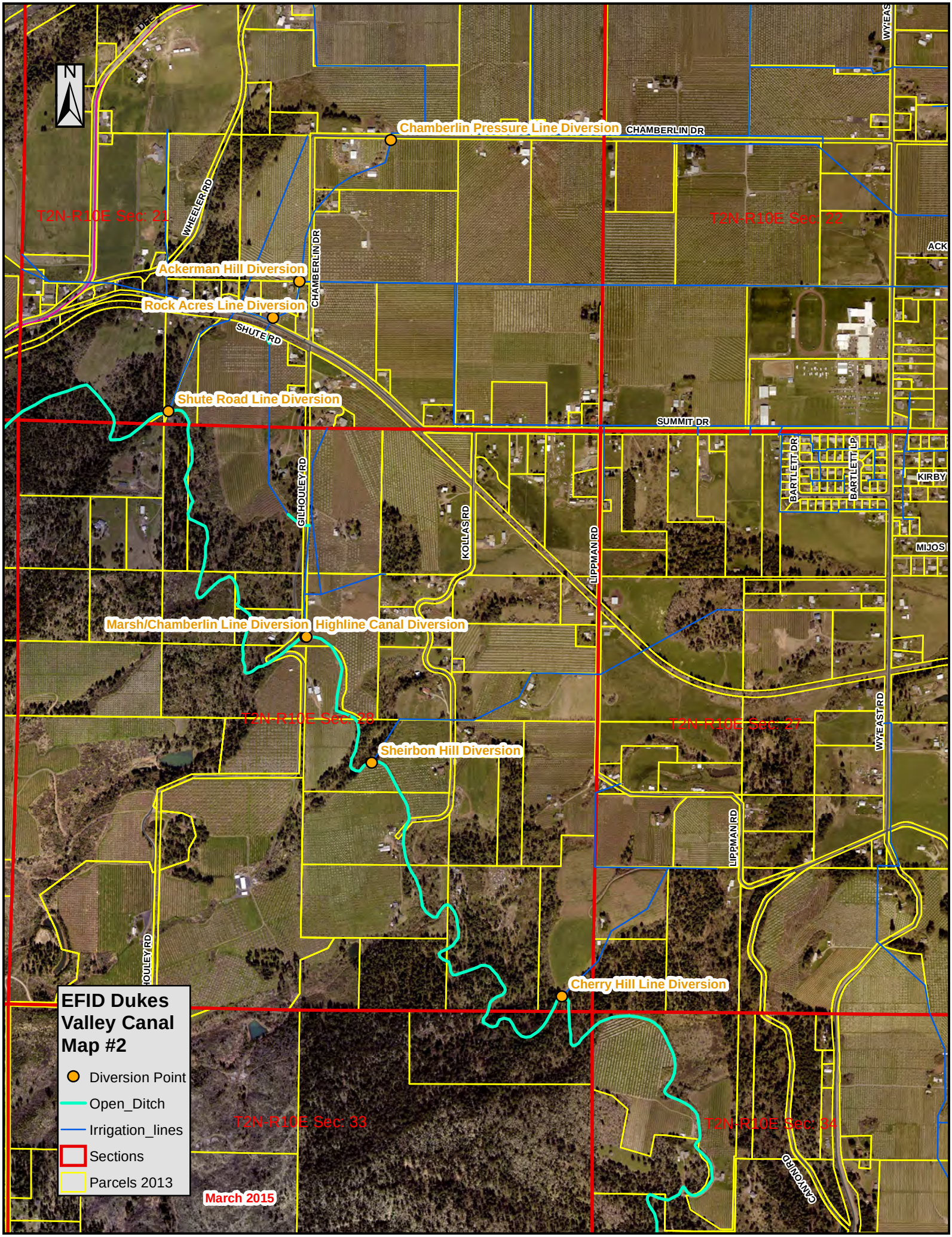
EFID Dukes Valley Canal Map #2
Diversion Point
Open_Ditch
Irrigation_lines
Sections
Parcels 2013
March 2015
Chamberlin Pressure Line Diversion
Ackerman Hill Diversion
Rock Acres Line Diversion
Shute Road Line Diversion
Marsh/Chamberlin Line Diversion
Highline Canal Diversion
Sheirbon Hill Diversion
Cherry Hill Line Diversion
T2N-R10E Sec: 21
T2N-R10E Sec: 22
T2N-R10E Sec: 28
T2N-R10E Sec: 27
T2N-R10E Sec: 33
T2N-R10E Sec: 34
CHAMBERLIN DR
WHEELER RD
SHUTE RD
SUMMIT DR
GILHOULEY RD
KOLLAS RD
LIPPMAN RD
BARTLETT DR
BARTLETT LP
KIRBY
MIJOS
WYEAST RD
CANYON RD
N

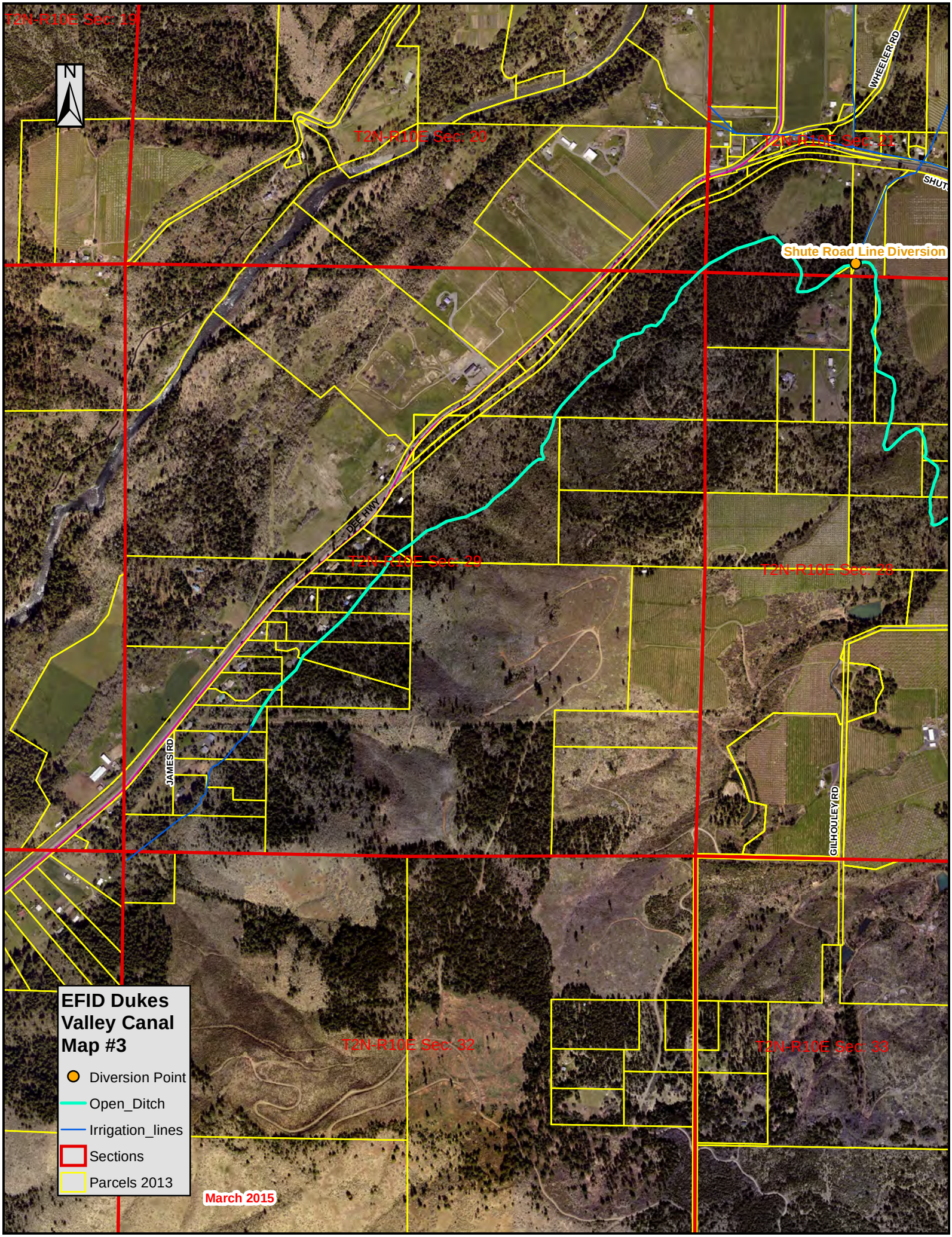
T2N-R10E Sec. 19
T2N-R10E Sec. 20
T2N-R10E Sec. 21
T2N-R10E Sec. 29
T2N-R10E Sec. 28
T2N-R10E Sec. 32
T2N-R10E Sec. 33
N
WHEELER RD
SHUT
Shute Road Line Diversion
DEE HWY
JAMES RD
GILHOULEY RD
EFID Dukes Valley Canal Map #3
Diversion Point
Open_Ditch
Irrigation_lines
Sections
Parcels 2013
March 2015

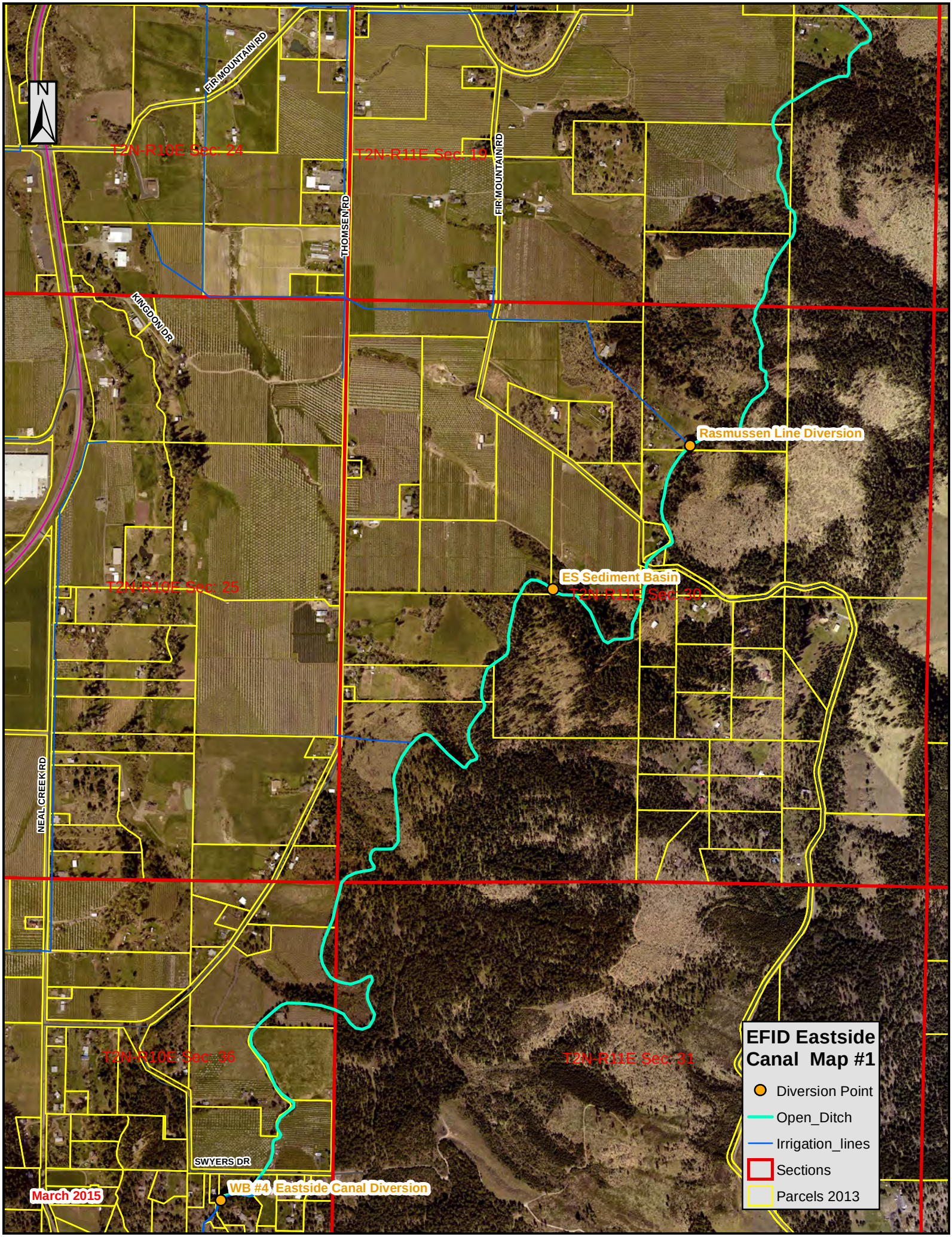
N
FIR MOUNTAIN RD
T2N-R10E Sec: 24
T2N-R11E Sec: 19
THOMSEN RD
FIR MOUNTAIN RD
KINGDON DR
Rasmussen Line Diversion
ES Sediment Basin
T2N-R11E Sec: 30
T2N-R10E Sec: 25
NEAL CREEK RD
T2N-R10E Sec: 36
T2N-R11E Sec: 31
SWYERS DR
WB #4 Eastside Canal Diversion
March 2015
EFID Eastside Canal Map #1
Diversion Point
Open_Ditch
Irrigation_lines
Sections
Parcels 2013

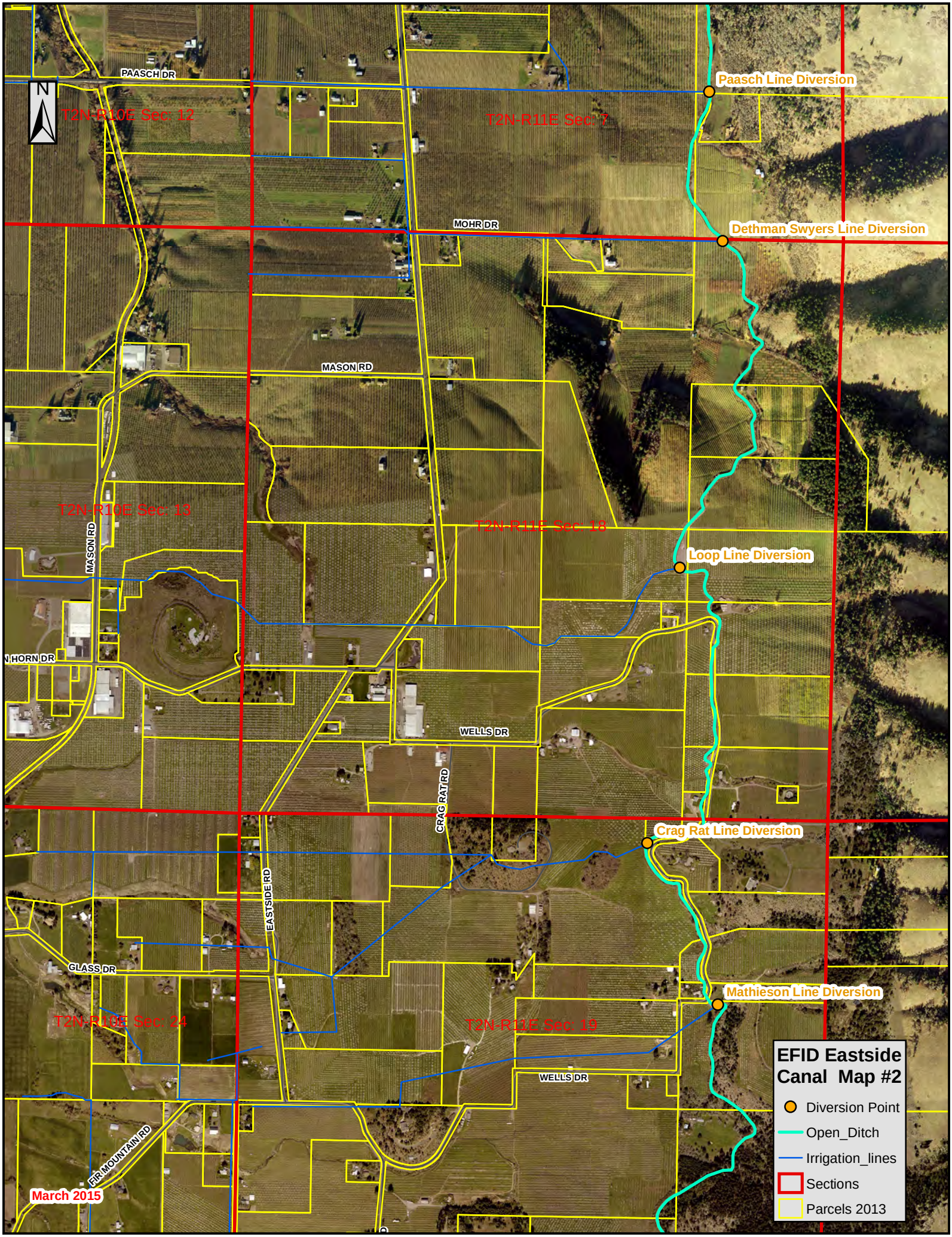
EFID Eastside Canal Map #2
Diversion Point
Open_Ditch
Irrigation_lines
Sections
Parcels 2013
Paasch Line Diversion
Dethman Swyers Line Diversion
Loop Line Diversion
Crag Rat Line Diversion
Mathieson Line Diversion
T2N-R10E Sec: 12
T2N-R11E Sec: 7
T2N-R10E Sec: 13
T2N-R11E Sec: 18
T2N-R10E Sec: 24
T2N-R11E Sec: 19
PAASCH DR
MOHR DR
MASON RD
WELLS DR
CRAG RAT RD
EASTSIDE RD
GLASS DR
FIR MOUNTAIN RD
March 2015

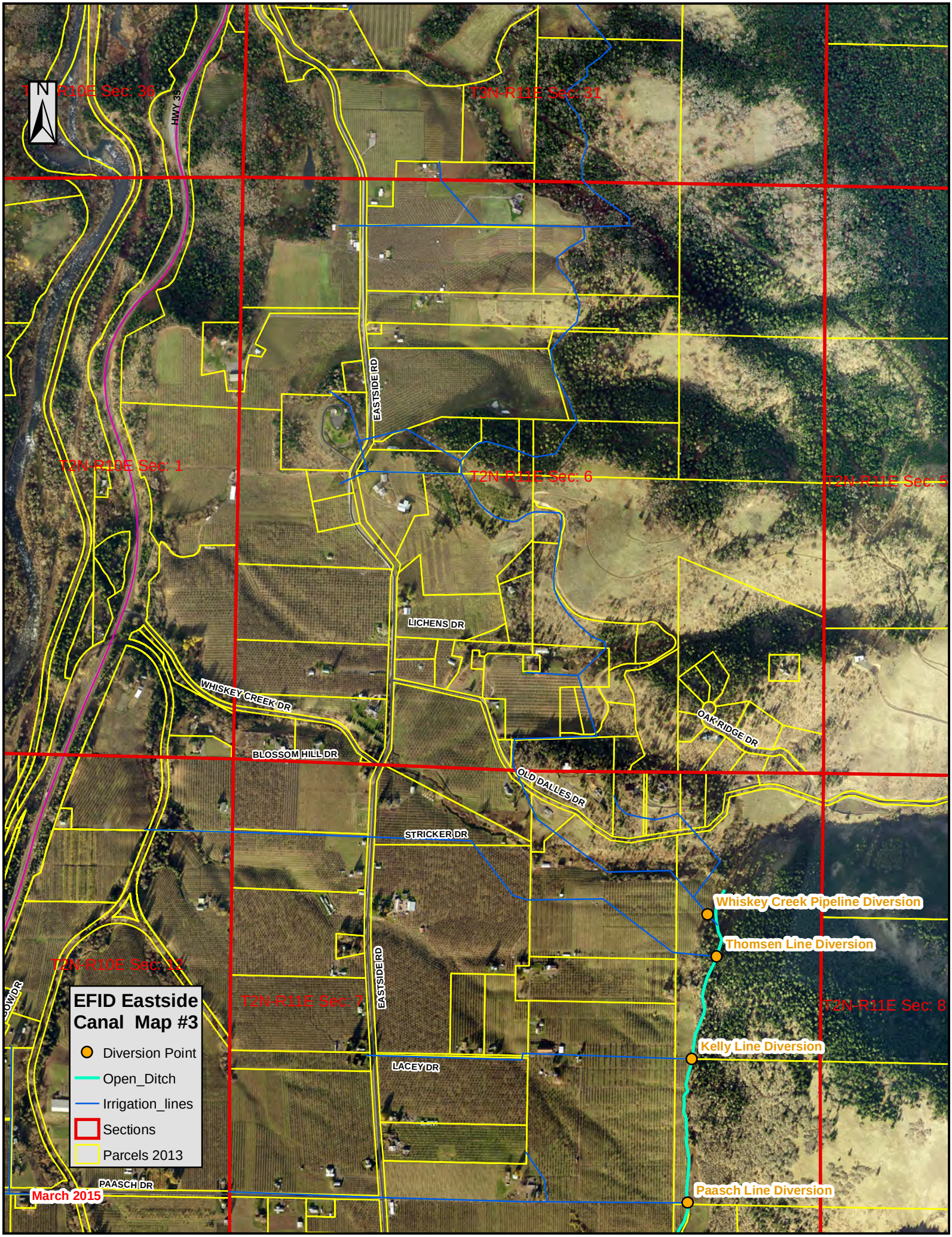
N
T3N-R10E Sec: 36
HWY 35
T3N-R11E Sec: 31
EASTSIDE RD
T2N-R10E Sec: 1
T2N-R11E Sec: 6
T2N-R11E Sec: 5
LICHENS DR
WHISKEY CREEK DR
BLOSSOM HILL DR
OAK RIDGE DR
OLD DALLES DR
STRICKER DR
Whiskey Creek Pipeline Diversion
Thomsen Line Diversion
T2N-R10E Sec: 12
T2N-R11E Sec: 7
EASTSIDE RD
T2N-R11E Sec: 8
Kelly Line Diversion
LACEY DR
PAASCH DR
Paasch Line Diversion
March 2015
EFID Eastside Canal Map #3
Diversion Point
Open_Ditch
Irrigation_lines
Sections
Parcels 2013

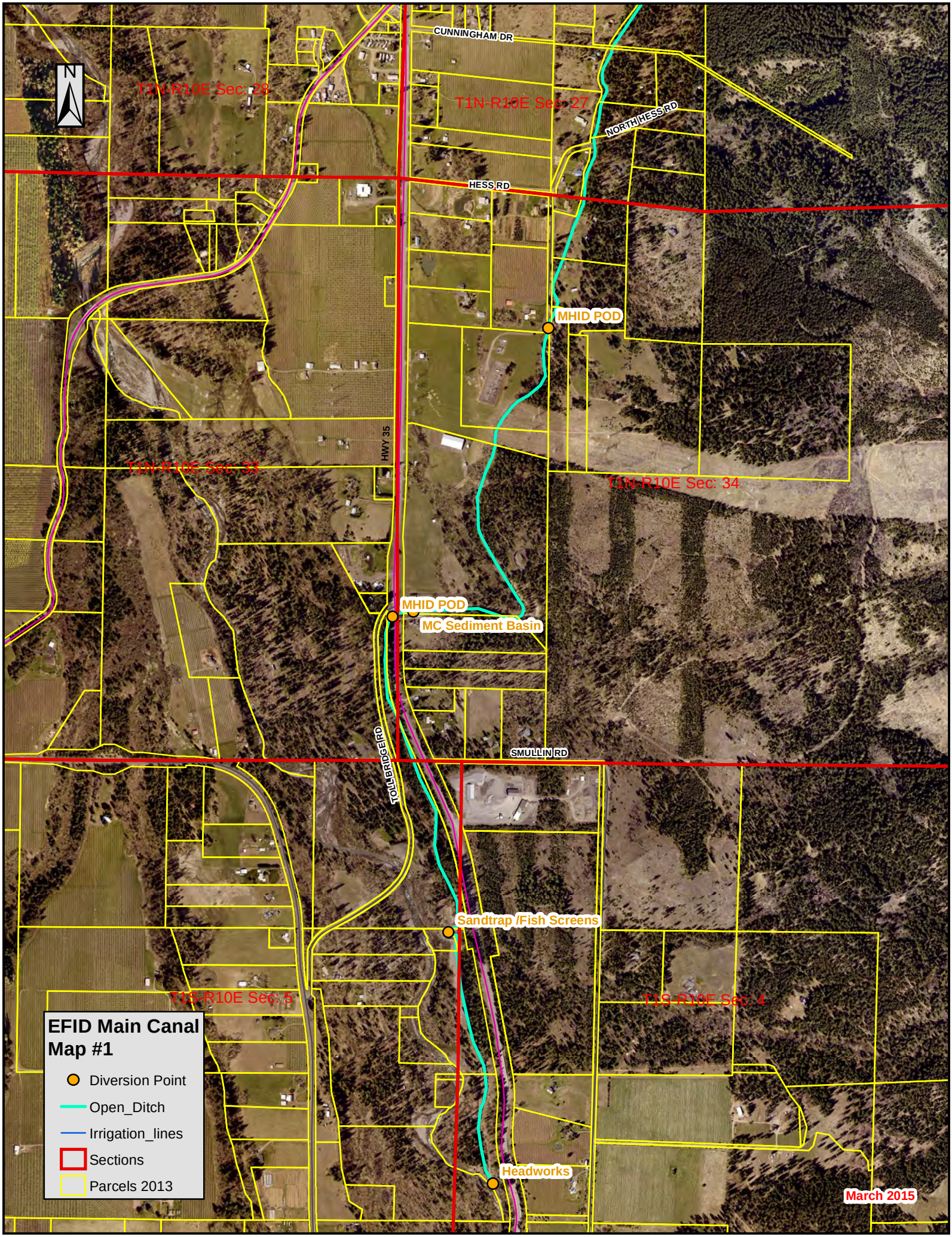
N
T1N-R10E Sec: 28
T1N-R10E Sec: 27
CUNNINGHAM DR
NORTH HESS RD
HESS RD
MHID POD
HWY 35
T1N-R10E Sec: 33
T1N-R10E Sec: 34
MHID POD
MC Sediment Basin
TOLLBRIDGE RD
SMULLIN RD
Sandtrap /Fish Screens
T1S-R10E Sec: 5
T1S-R10E Sec: 4
Headworks
March 2015
EFID Main Canal
Map #1
Diversion Point
Open_Ditch
Irrigation_lines
Sections
Parcels 2013

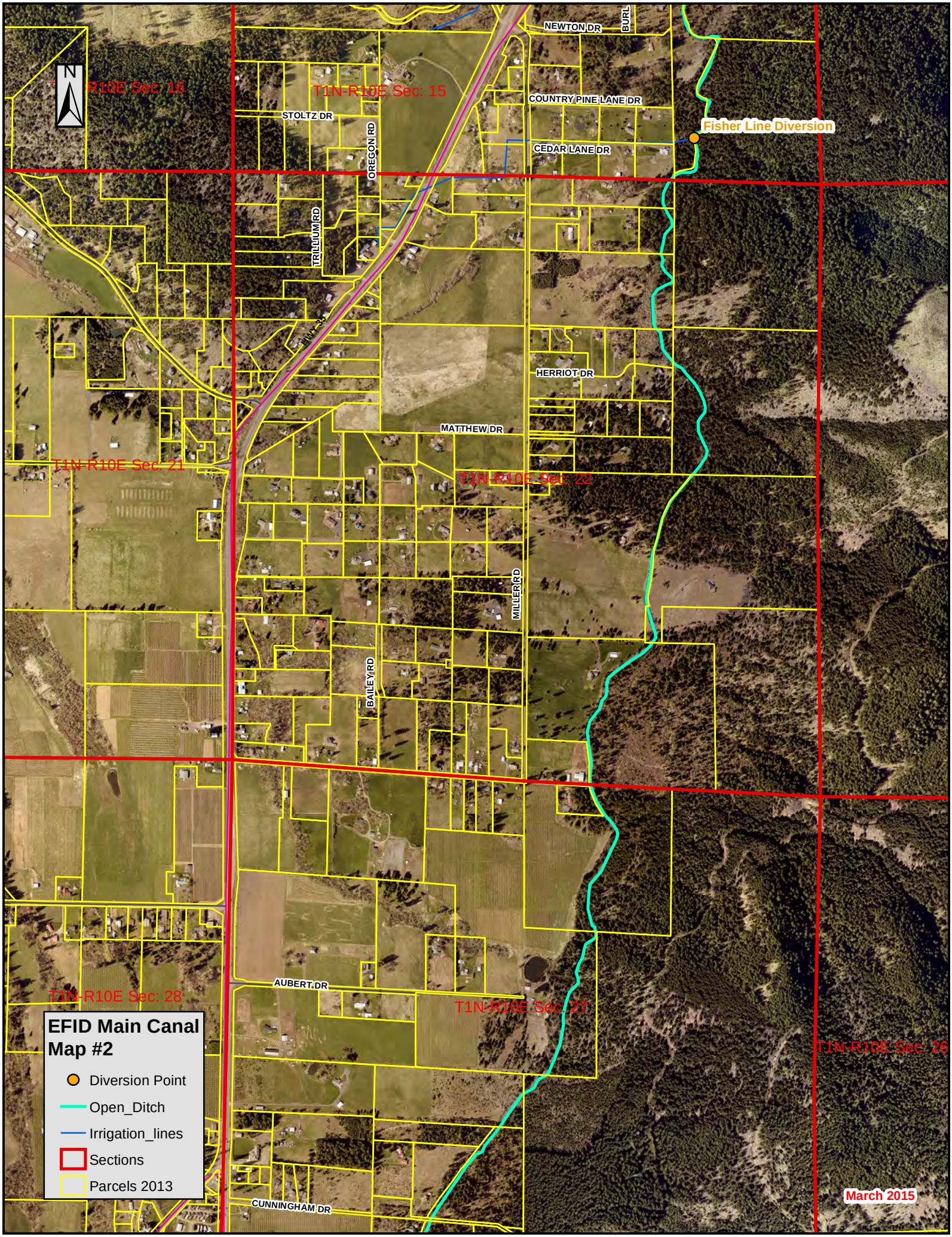
N
T1N-R10E Sec: 16
T1N-R10E Sec: 15
NEWTON DR
BURL
COUNTRY PINE LANE DR
STOLTZ DR
OREGON RD
CEDAR LANE DR
Fisher Line Diversion
TRILLIUM RD
HWY 99
HERRIOT DR
MATTHEW DR
T1N-R10E Sec: 21
T1N-R10E Sec: 22
MILLER RD
BAILEY RD
AUBERT DR
T1N-R10E Sec: 28
T1N-R10E Sec: 27
T1N-R10E Sec: 26
CUNNINGHAM DR
EFID Main Canal Map #2
Diversion Point
Open_Ditch
Irrigation_lines
Sections
Parcels 2013
March 2015

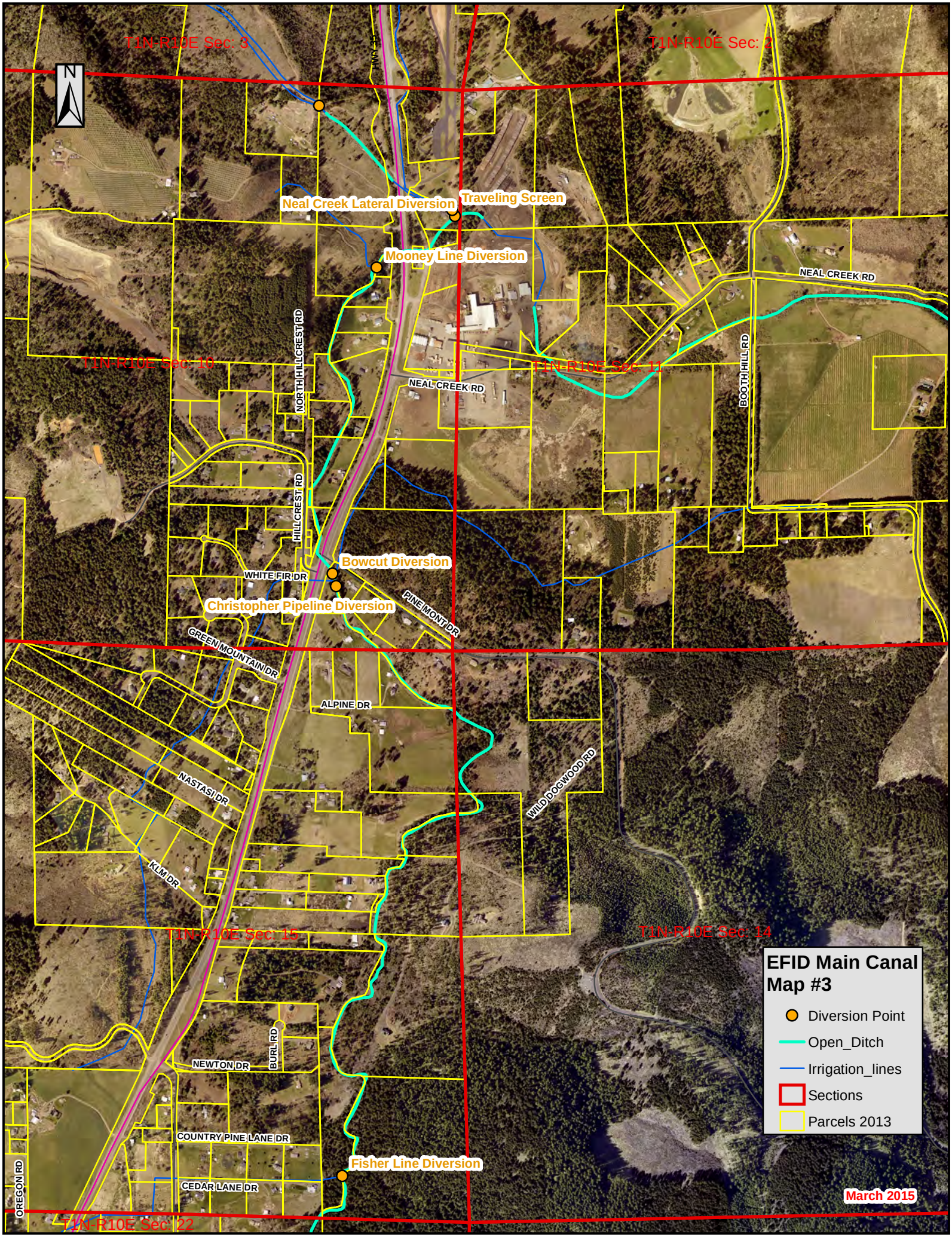
EFID Main Canal Map #3
Diversion Point
Open_Ditch
Irrigation_lines
Sections
Parcels 2013
T1N-R10E Sec: 3
T1N-R10E Sec: 2
T1N-R10E Sec: 10
T1N-R10E Sec: 11
T1N-R10E Sec: 15
T1N-R10E Sec: 14
T1N-R10E Sec: 22
Neal Creek Lateral Diversion
Traveling Screen
Mooney Line Diversion
Bowcut Diversion
Christopher Pipeline Diversion
Fisher Line Diversion
NEAL CREEK RD
NORTH HILLCREST RD
HILLCREST RD
BOOTH HILL RD
WHITE FIR DR
PINE MONT DR
GREEN MOUNTAIN DR
ALPINE DR
NASTASI DR
KLM DR
WILD DOGWOOD RD
NEWTON DR
BURL RD
COUNTRY PINE LANE DR
CEDAR LANE DR
OREGON RD
March 2015

Appendix 4

District Overflow Maps

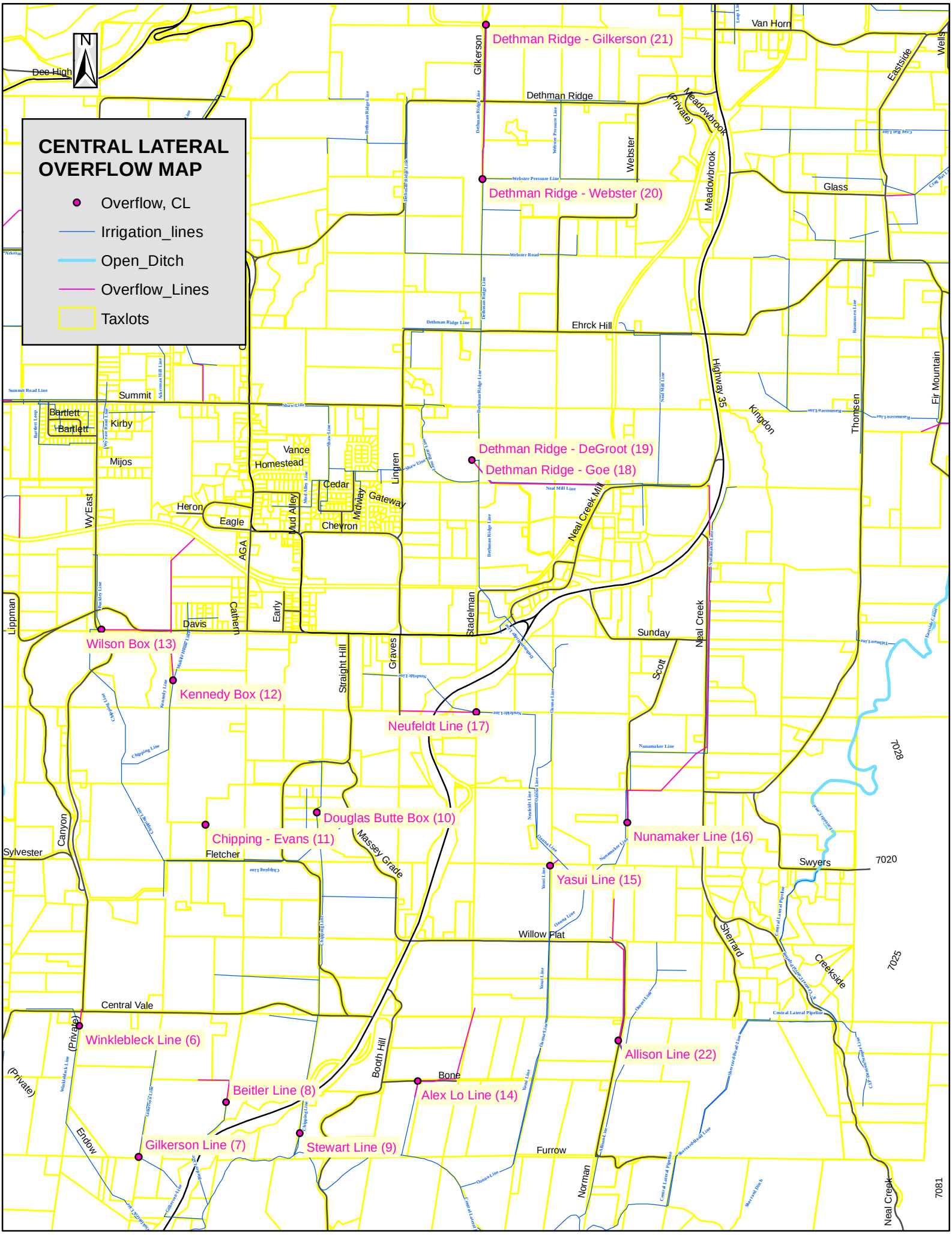
CENTRAL LATERAL OVERFLOW MAP
Overflow, CL
Irrigation_lines
Open_Ditch
Overflow_Lines
Taxlots
N
Dethman Ridge - Gilkerson (21)
Dethman Ridge - Webster (20)
Dethman Ridge - DeGroot (19)
Dethman Ridge - Goe (18)
Wilson Box (13)
Kennedy Box (12)
Neufeldt Line (17)
Douglas Butte Box (10)
Chipping - Evans (11)
Nunamaker Line (16)
Yasui Line (15)
Winklebleck Line (6)
Allison Line (22)
Beitler Line (8)
Alex Lo Line (14)
Gilkerson Line (7)
Stewart Line (9)
Dee High
Van Horn
Dethman Ridge
Gilkerson
Webster
Meadowbrook
(Private)
Eastside
Wells
Glass
Ehrck Hill
Highway 35
Kingdon
Thomsen
Fir Mountain
Summit
Bartlett
Kirby
Mijos
Vance
Homestead
Cedar
Heron
Eagle
Mud Alley
Chevron
Midway
Gateway
Lingren
Neal Creek Mill
Wy'East
AGA
Lippman
Davis
Cathern
Early
Stadelman
Sunday
Neal Creek
Straight Hill
Graves
Scott
Canyon
Sylvester
Fletcher
Massey Grade
Swyers
7020
7028
Willow Flat
Sherrard
Creekside
7025
Central Vale
(Private)
Endow
Booth Hill
Bone
Furrow
Norman
Neal Creek
7081

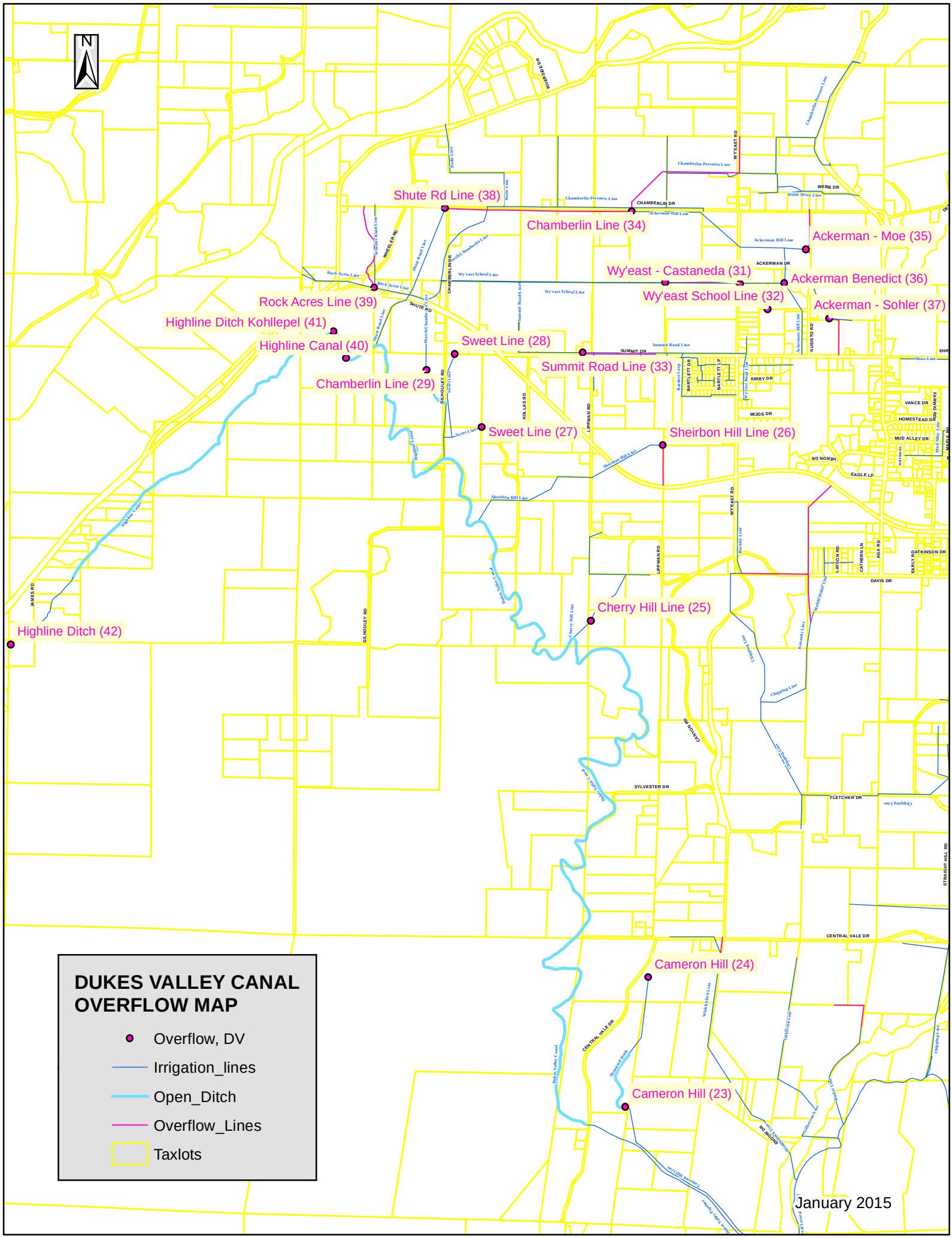
N
Shute Rd Line (38)
Chamberlin Line (34)
Ackerman - Moe (35)
Wy'east - Castaneda (31)
Ackerman Benedict (36)
Wy'east School Line (32)
Ackerman - Sohler (37)
Rock Acres Line (39)
Highline Ditch Kohllepel (41)
Highline Canal (40)
Sweet Line (28)
Summit Road Line (33)
Chamberlin Line (29)
Sweet Line (27)
Sheirbon Hill Line (26)
Cherry Hill Line (25)
Highline Ditch (42)
Cameron Hill (24)
Cameron Hill (23)
DUKES VALLEY CANAL OVERFLOW MAP
Overflow, DV
Irrigation_lines
Open_Ditch
Overflow_Lines
Taxlots
January 2015

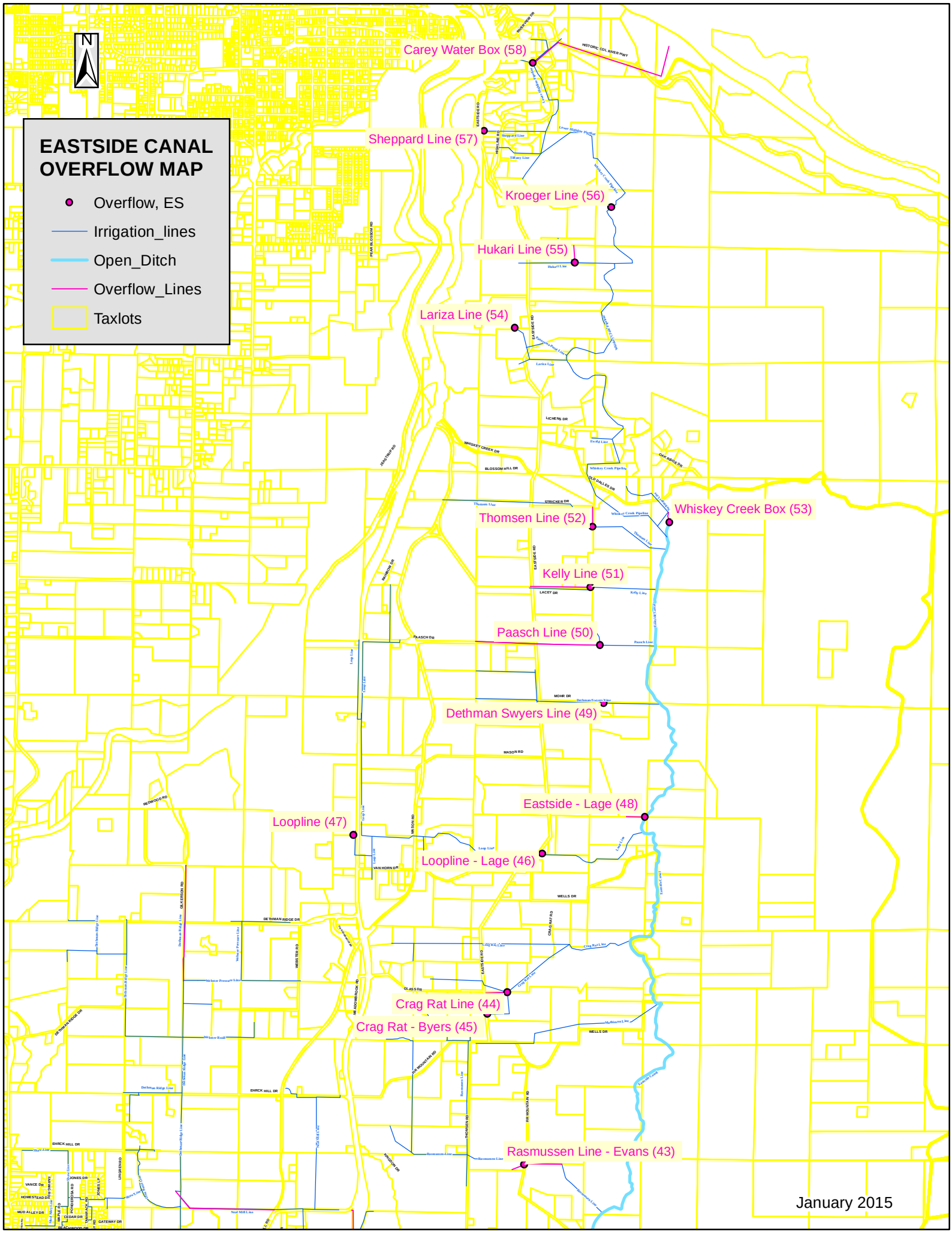
EASTSIDE CANAL OVERFLOW MAP
Overflow, ES
Irrigation_lines
Open_Ditch
Overflow_Lines
Taxlots
N
Carey Water Box (58)
Sheppard Line (57)
Kroeger Line (56)
Hukari Line (55)
Lariza Line (54)
Thomsen Line (52)
Whiskey Creek Box (53)
Kelly Line (51)
Paasch Line (50)
Dethman Swyers Line (49)
Eastside - Lage (48)
Loopline (47)
Loopline - Lage (46)
Crag Rat Line (44)
Crag Rat - Byers (45)
Rasmussen Line - Evans (43)
January 2015

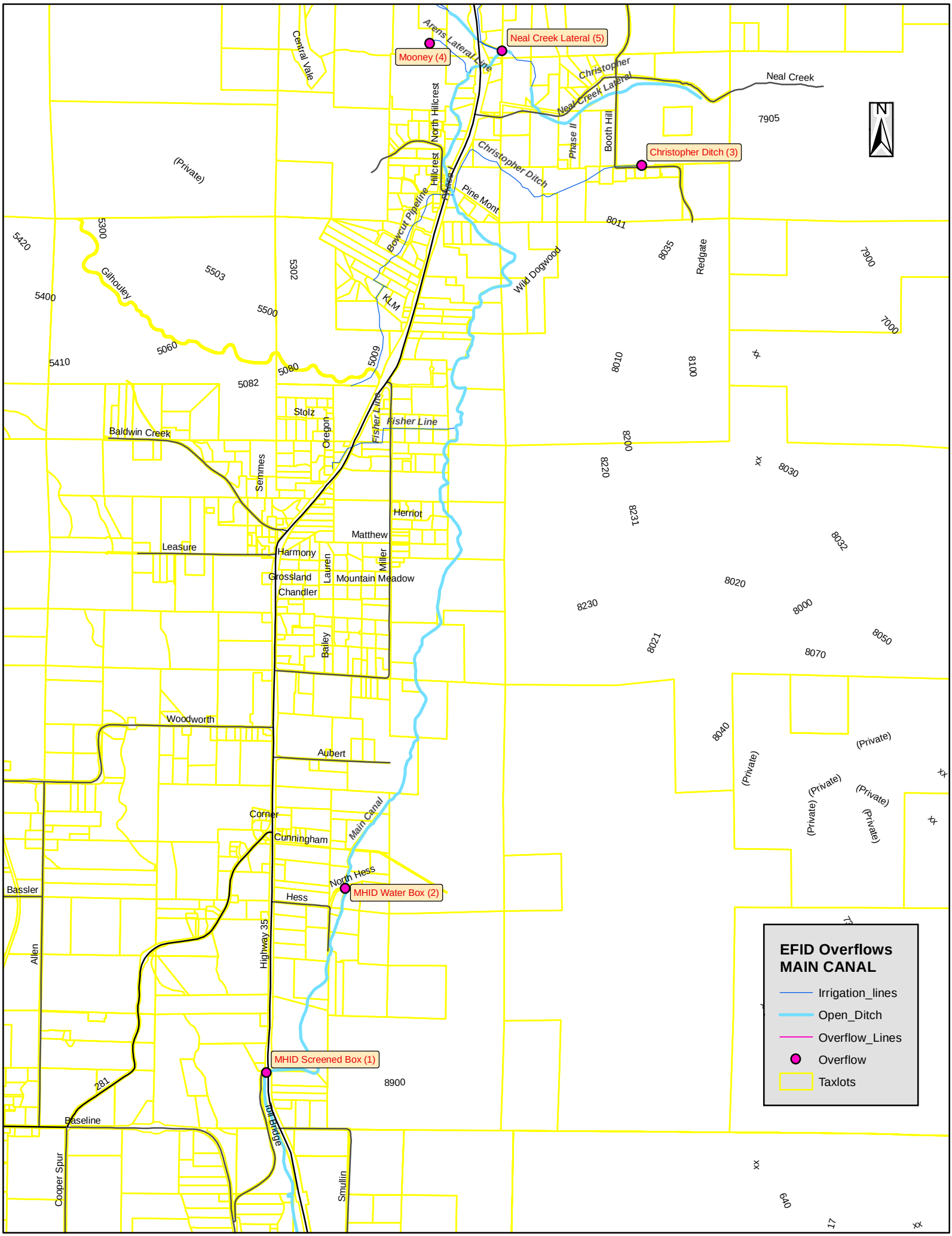
EFID Overflows
MAIN CANAL
Irrigation_lines
Open_Ditch
Overflow_Lines
Overflow
Taxlots
Mooney (4)
Neal Creek Lateral (5)
Christopher Ditch (3)
MHID Water Box (2)
MHID Screened Box (1)
Arens Lateral Line
Central Vale
North Hillcrest
Hillcrest
Bowcut Pipeline
Christopher
Neal Creek Lateral
Neal Creek
Phase II
Booth Hill
Christopher Ditch
Pine Mont
Wild Dogwood
Redgate
KLM
Gilhouley
Fisher Line
Stolz
Oregon
Baldwin Creek
Semmes
Herriot
Matthew
Leasure
Harmony
Lauren
Miller
Grossland
Mountain Meadow
Chandler
Bailey
Woodworth
Aubert
Corner
Cunningham
Main Canal
North Hess
Hess
Bassler
Allen
Highway 35
Toll Bridge
Baseline
Cooper Spur
Smullin
(Private)
N

Appendix 5

Preliminary Drawings

SHEET NOTES

1. WATER SURFACE (W.S.) ELEVATIONS TO BE CONFIRMED.

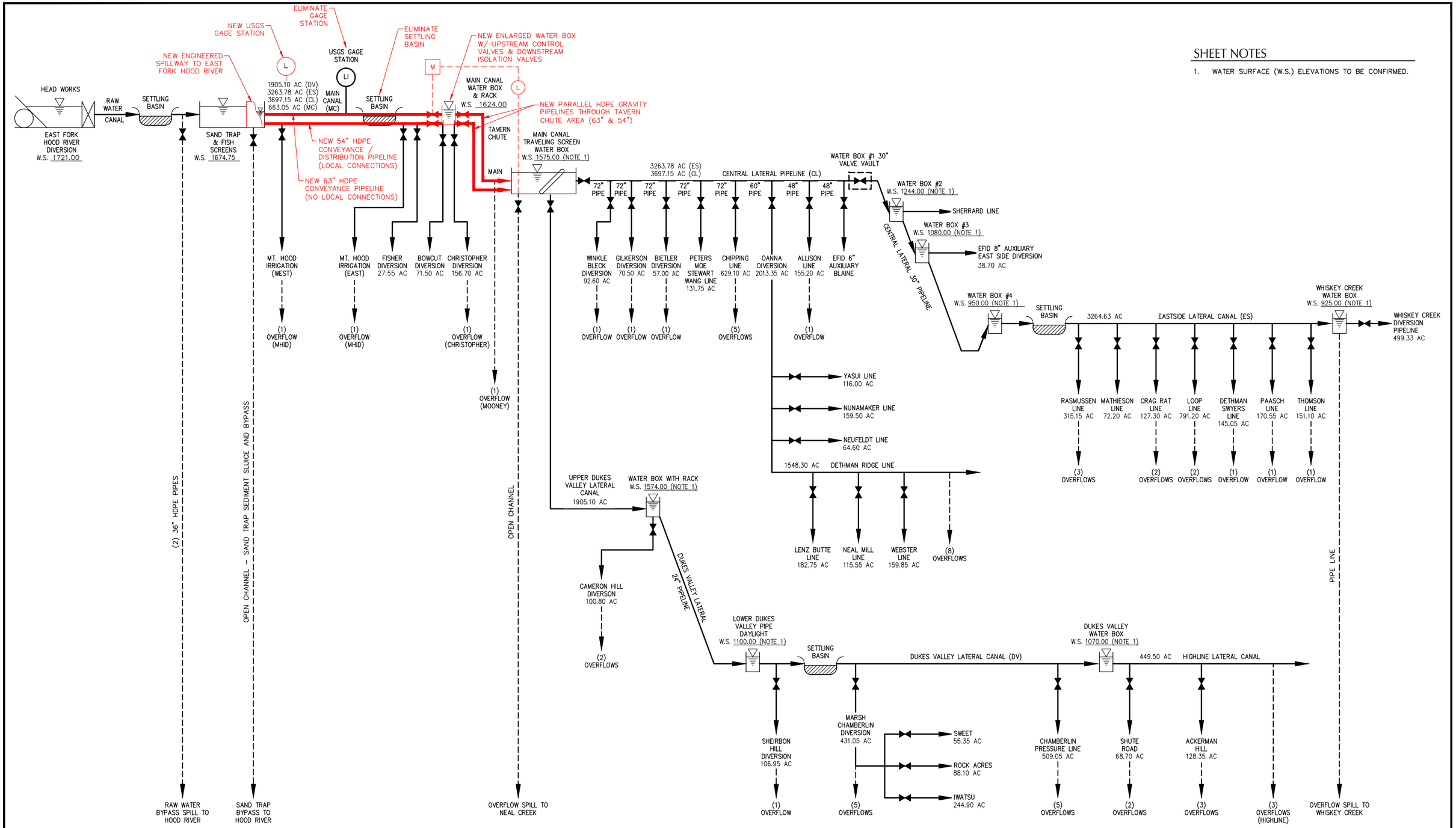

REVISION	DATE	DESCRIPTION	BY

22x34

EAST FORK IRRIGATION DISTRICT

kpff Consulting Engineers
111 S.W. Fifth Avenue, Suite 2400 Portland, OR 97204-3628
(503) 227-3251 Civil Fax (503) 274-4681
Denver Eugene Los Angeles Pasadena Phoenix Portland St. Louis
Sacramento San Diego San Francisco Seattle Tacoma

FOR INFORMATION ONLY

JOB No.:	314222.01
DESIGNED BY:	MBW
DRAWN BY:	SB
CHECKED BY:	MBW
PLOT DATE:	5/8/15 1:20pm
PLOTTED BY:	RRudnick
DWG NAME:	
TAB NAME:	

3500 Graves Rd, Hood River, OR 97031

EAST FORK IRRIGATION
SYSTEM IMPROVEMENT PLAN
MAIN CANAL PIPELINE
HOOD RIVER VALLEY, OREGON

SHEET NO.
C2
SHEET 2 OF 10
RECORD NO. 314222-01

File: N:\c\2014\314222-EFID-MP-and-Telemetry-Feasibility-Analysis\CAD\PLOT\C2 MAIN CANAL PIPELINE.dwg TAB:C2
Plotted: 5/8/15 at 1:20pm By: RRudnick
XREFs: xtb

SHEET NOTES

1. WATER SURFACE (W.S.) ELEVATIONS TO BE CONFIRMED.

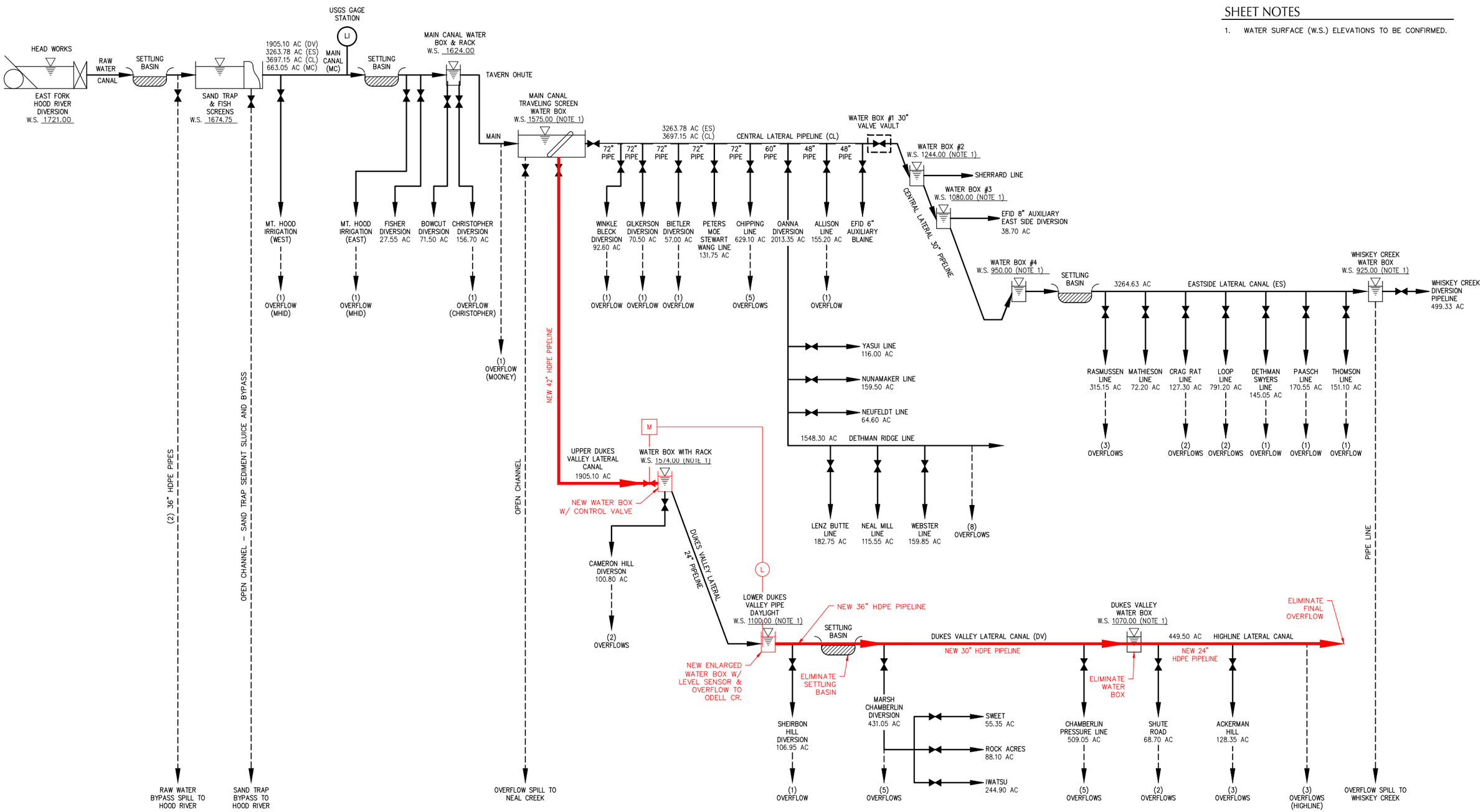

REVISION	DATE	DESCRIPTION	BY

22x34

EAST FORK IRRIGATION DISTRICT

kpff Consulting Engineers
111 S.W. Fifth Avenue, Suite 2400 Portland, OR 97204-3628
(503) 227-3251 Civil Fax (503) 274-4681
Denver Eugene Los Angeles Pasadena Phoenix Portland St. Louis
Sacramento San Diego San Francisco Seattle Tacoma

FOR INFORMATION ONLY

JOB No.:	314222.01
DESIGNED BY:	MBW
DRAWN BY:	SB
CHECKED BY:	MBW
PLOT DATE:	5/8/15 1:20pm
PLOTTED BY:	RRudnick
DWG NAME:	
TAB NAME:	

3500 Graves Rd, Hood River, OR 97031

EAST FORK IRRIGATION
SYSTEM IMPROVEMENT PLAN
DUKES VALLEY LATERAL PIPELINE
HOOD RIVER VALLEY, OREGON

SHEET NO.
C3
SHEET 3 OF 10
RECORD NO. 314222-01

File: N:\c\2014\314222-EFID-MP-and-Telemetry-Feasibility-Analysis\CAD\PLOT\C3 DUKES VALLEY LATERAL PIPELINE.dwg TAB:C3
Plotted: 5/8/15 at 1:20pm By: RRudnick
XREFs: xtb

SHEET NOTES

1. WATER SURFACE (W.S.) ELEVATIONS TO BE CONFIRMED.

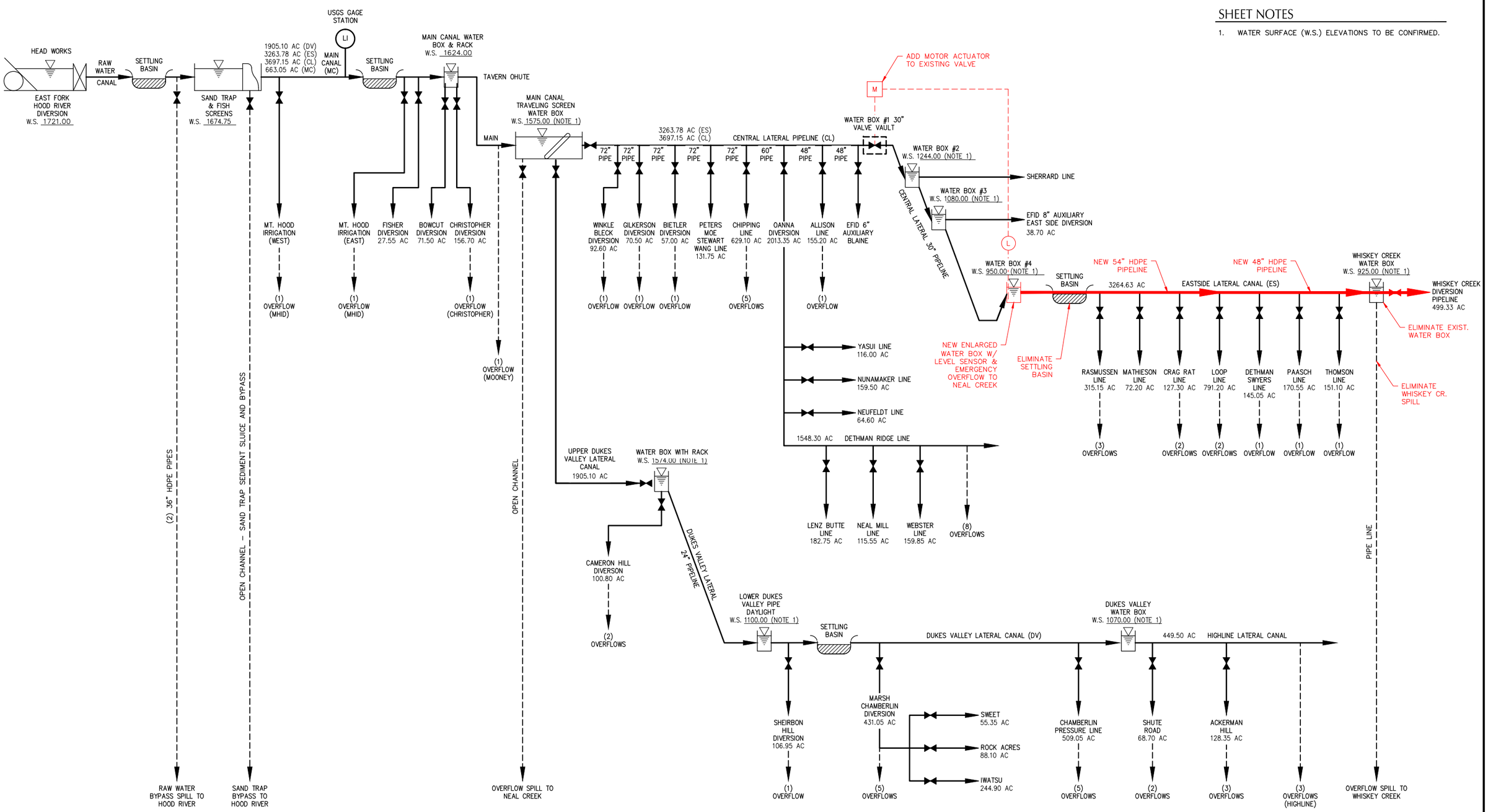

REVISION	DATE	DESCRIPTION	BY

22x34

EAST FORK IRRIGATION DISTRICT

kpff Consulting Engineers
111 S.W. Fifth Avenue, Suite 2400 Portland, OR 97204-3628
(503) 227-3251 Civil Fax (503) 274-4681
Denver Eugene Los Angeles Pasadena Phoenix Portland St. Louis
Sacramento San Diego San Francisco Seattle Tacoma

FOR INFORMATION ONLY

JOB No.:	314222.01
DESIGNED BY:	MBW
DRAWN BY:	SB
CHECKED BY:	MBW
PLOT DATE:	5/8/15 1:20pm
PLOTTED BY:	RRudnick
DWG NAME:	
TAB NAME:	

3500 Graves Rd, Hood River, OR 97031

EAST FORK IRRIGATION
SYSTEM IMPROVEMENT PLAN
EASTSIDE LATERAL PIPELINE OPTION 1
HOOD RIVER VALLEY, OREGON

SHEET NO. C4

SHEET 4 OF 10

RECORD NO. 314222-01

File: N:\c\2014\314222-EFID-MP-and-Telemetry-Feasibility-Analysis\CAD\PLOT\C4 EASTSIDE LATERAL PIPELINE OPTION 1.dwg TAB:C4
Plotted: 5/8/15 at 1:20pm By: RRudnick
XREFs: xtb

SHEET NOTES

1. WATER SURFACE (W.S.) ELEVATIONS TO BE CONFIRMED.

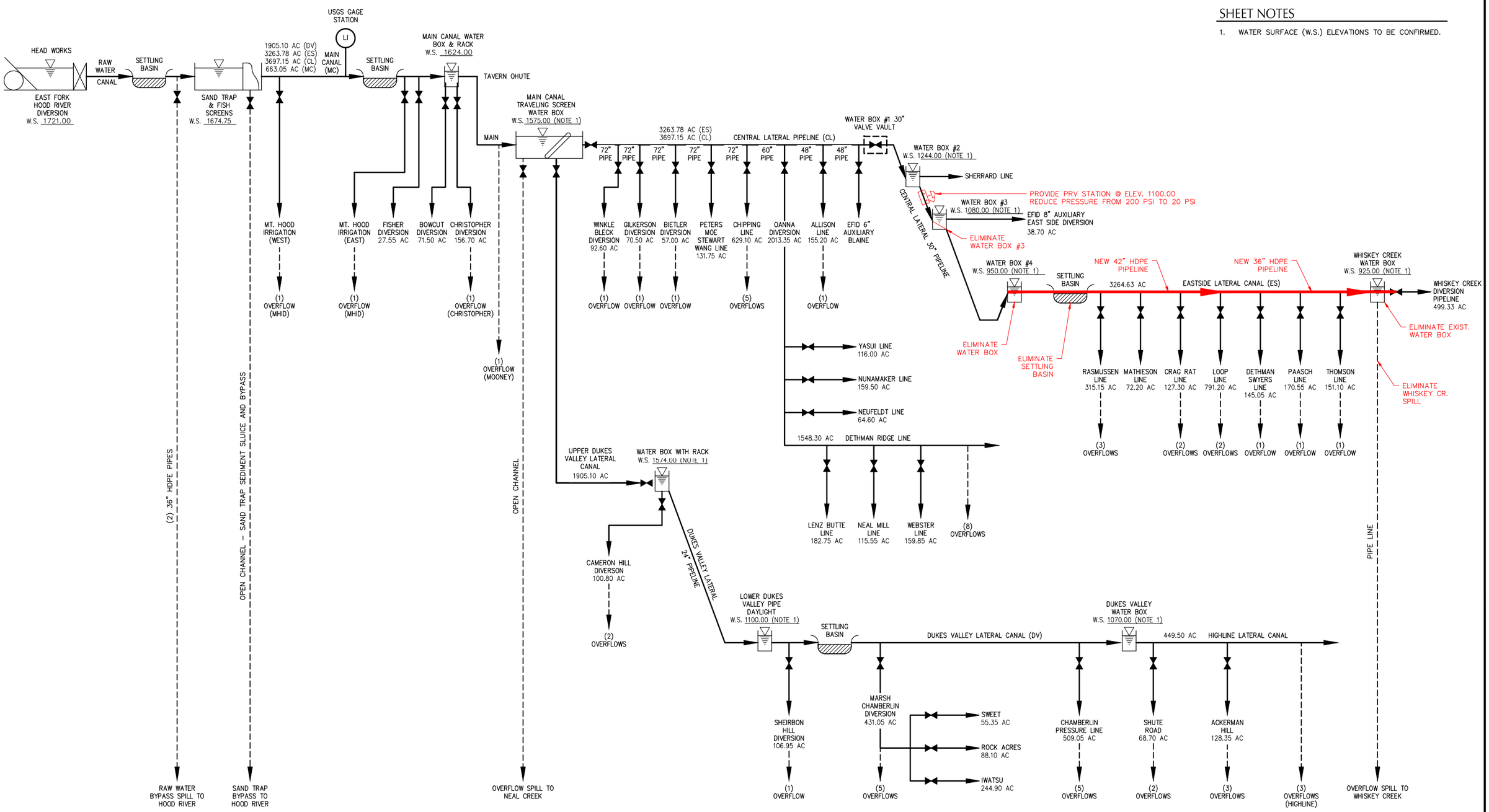

REVISION	DATE	DESCRIPTION	BY

22x34

EAST FORK IRRIGATION DISTRICT

kpff Consulting Engineers
111 S.W. Fifth Avenue, Suite 2400 Portland, OR 97204-3628
(503) 227-3251 Civil Fax (503) 274-4681
Denver Eugene Los Angeles Pasadena Phoenix Portland St. Louis
Sacramento San Diego San Francisco Seattle Tacoma

FOR INFORMATION ONLY

JOB No.:	314222.01
DESIGNED BY:	MBW
DRAWN BY:	SB
CHECKED BY:	MBW
PLOT DATE:	5/8/15 1:20pm
PLOTTED BY:	RRudnick
DWG NAME:	
TAB NAME:	

3500 Graves Rd, Hood River, OR 97031

EAST FORK IRRIGATION
SYSTEM IMPROVEMENT PLAN
EASTSIDE LATERAL PIPELINE OPTION 2
HOOD RIVER VALLEY, OREGON

SHEET NO. C5

SHEET 5 OF 10

RECORD NO. 314222-01

File: N:\c\2014\314222-EFID-MP-and-Telemetry-Feasibility-Analysis\CAD\PLOT\C5 EASTSIDE LATERAL PIPELINE OPTION 2.dwg TAB:C5
Plotted: 5/8/15 at 1:20pm By: RRudnick
XREFs: xtb

SHEET NOTES

1. WATER SURFACE (W.S.) ELEVATIONS TO BE CONFIRMED.

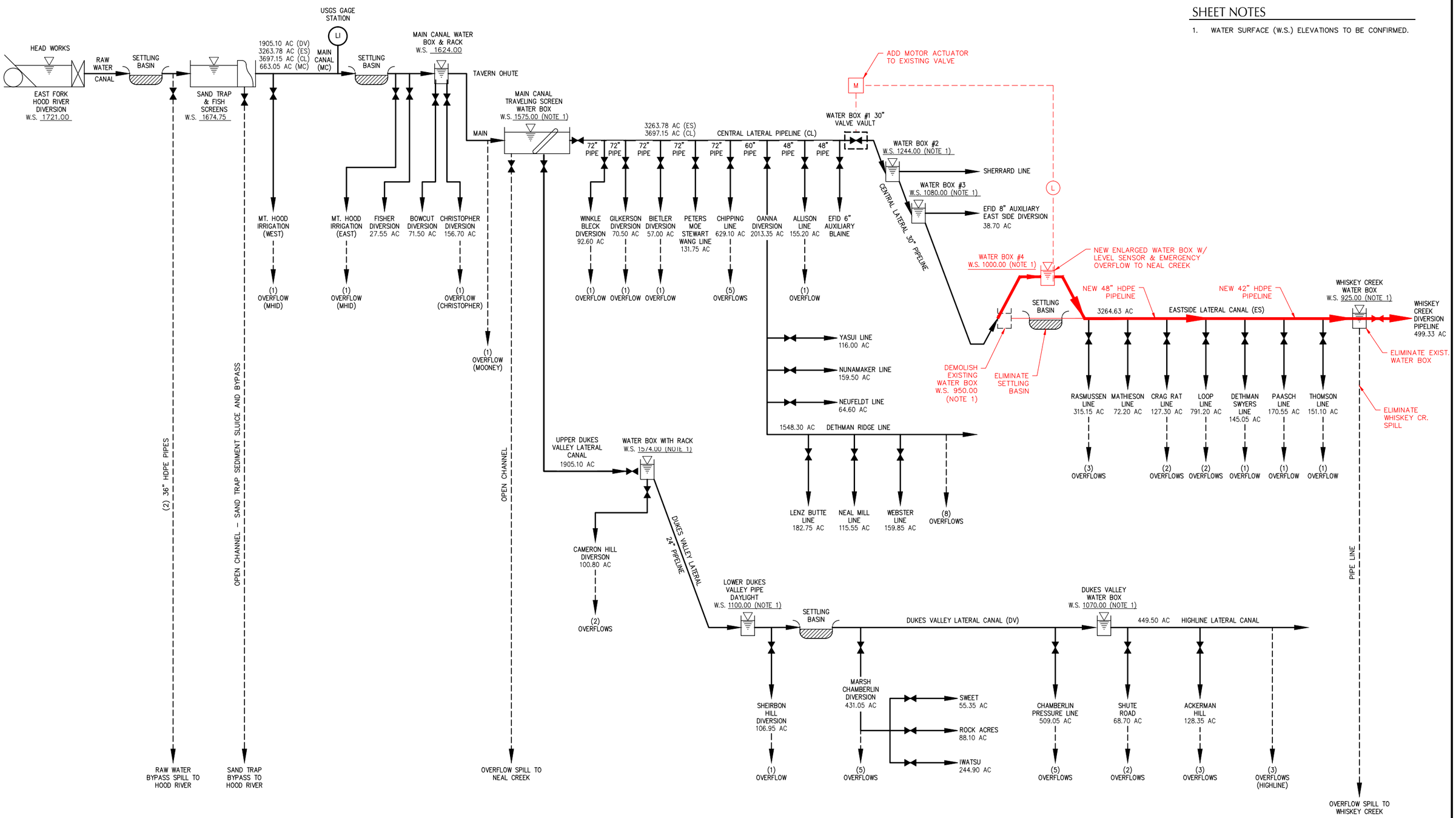

REVISION	DATE	DESCRIPTION	BY

EAST FORK IRRIGATION DISTRICT

kpff Consulting Engineers
111 S.W. Fifth Avenue, Suite 2400 Portland, OR 97204-3628
(503) 227-3251 Civil Fax (503) 274-4681
Denver Eugene Los Angeles Pasadena Phoenix Portland St. Louis Sacramento San Diego San Francisco Seattle Tacoma

FOR INFORMATION ONLY

JOB No.:	314222.01
DESIGNED BY:	MBW
DRAWN BY:	SB
CHECKED BY:	MBW
PLOT DATE:	5/12/15 3:59pm
PLOTTED BY:	RRudnick
DWG NAME:	
TAB NAME:	

3500 Graves Rd, Hood River, OR 97031

EAST FORK IRRIGATION
SYSTEM IMPROVEMENT PLAN
EASTSIDE LATERAL PIPELINE OPTION 3
HOOD RIVER VALLEY, OREGON

SHEET NO.
C6
SHEET 6 OF 10
RECORD NO. 314222-01

File: N:\c\2014\314222-EFID-MP-and-Telemetry-Feasibility-Analysis\CAD\PLOT\C6 EASTSIDE LATERAL PIPELINE OPTION 3.dwg TAB:C6
Plotted: 5/12/15 at 3:59pm By: RRudnick
XREFs: xtb
22x34

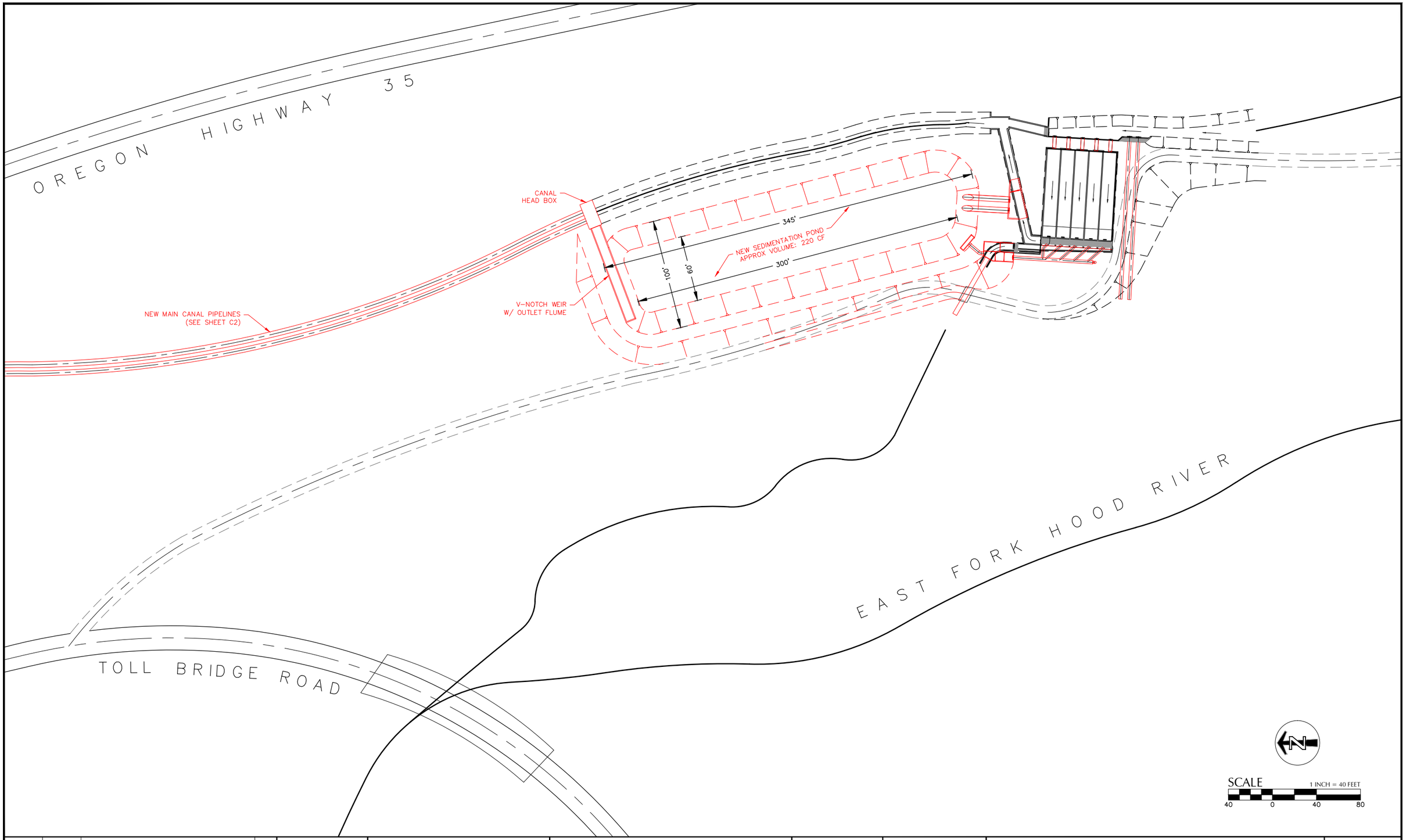

REVISION	DATE	DESCRIPTION	BY

22x34

EAST FORK IRRIGATION DISTRICT
HOOD RIVER OREGON

kpff Consulting Engineers
111 S.W. Fifth Avenue, Suite 2400 Portland, OR 97204-3628
(503) 227-3251 Civil Fax (503) 274-4681
Denver Eugene Los Angeles Pasadena Phoenix Portland St. Louis
Sacramento San Diego San Francisco Seattle Tacoma

FOR INFORMATION ONLY

JOB No.:	314222.01
DESIGNED BY:	MBW
DRAWN BY:	SB
CHECKED BY:	MBW
PLOT DATE:	5/8/15 1:21pm
PLOTTED BY:	RRudnick
DWG NAME:	
TAB NAME:	

3500 Graves Rd, Hood River, OR 97031

EAST FORK IRRIGATION DISTRICT
SYSTEM IMPROVEMENT PLAN
NEW SANDTRAP SEDIMENT POND
HOOD RIVER VALLEY, OREGON

SHEET NO.
C7
SHEET 7 OF 10
RECORD NO. 314222-01

File: N:\e\p\2014\314222-EFID-MP-and-Telemetry-Analysis\CAD\PLOT\C7 NEW SANDTRAP SEDIMENT POND.dwg TAB:C7
Plotted: 5/8/15 at 1:21pm By: RRudnick
XREFs: xtb

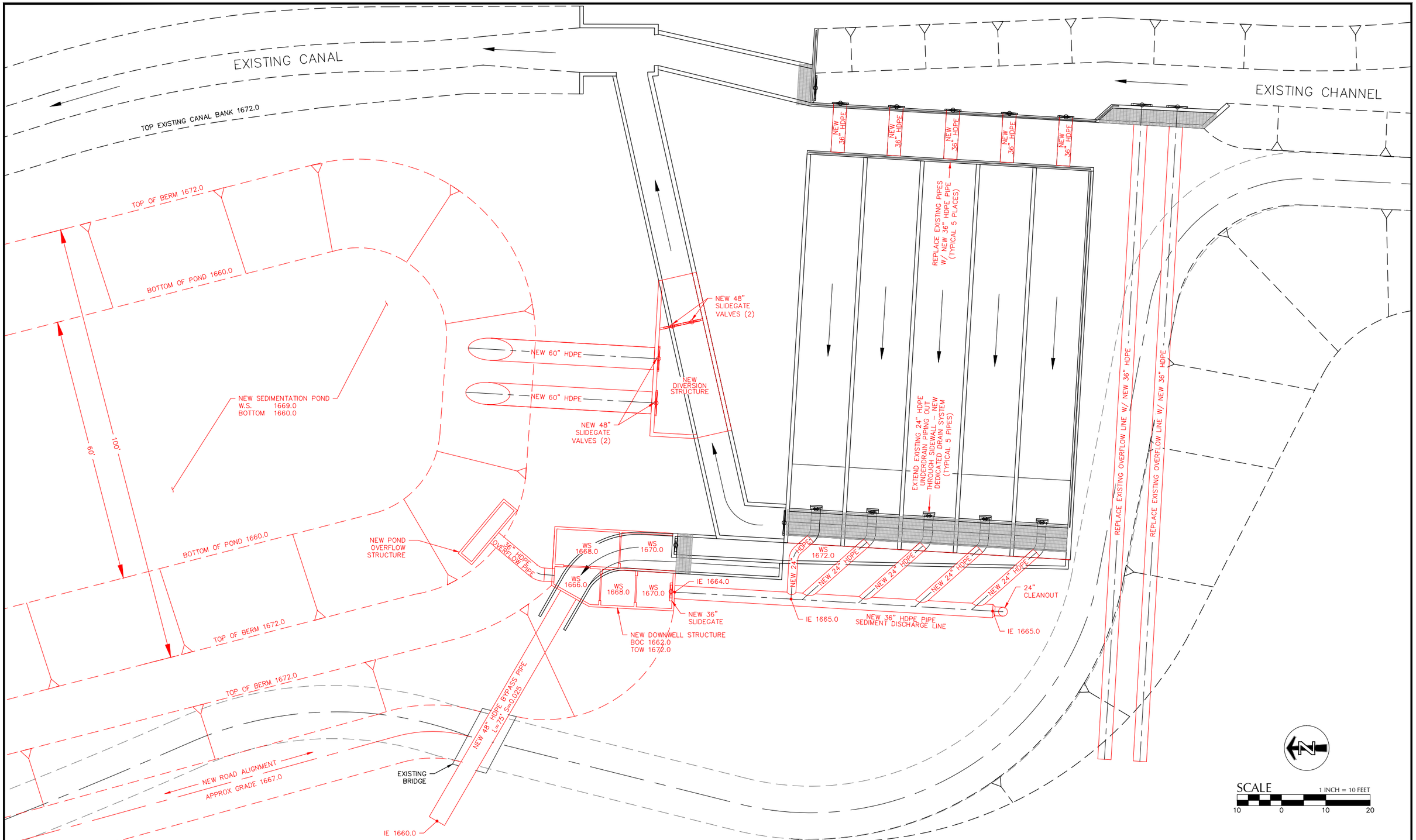

REVISION	DATE	DESCRIPTION	BY

22x34

EAST FORK IRRIGATION DISTRICT

kpff Consulting Engineers
111 S.W. Fifth Avenue, Suite 2400 Portland, OR 97204-3628
(503) 227-3251 Civil Fax (503) 274-4681
Denver Eugene Los Angeles Pasadena Phoenix Portland St. Louis
Sacramento San Diego San Francisco Seattle Tacoma

FOR INFORMATION ONLY

JOB No.:	314222.01
DESIGNED BY:	MBW
DRAWN BY:	SB
CHECKED BY:	MBW
PLOT DATE:	5/8/15 1:21pm
PLOTTED BY:	RRudnick
DWG NAME:	
TAB NAME:	

3500 Graves Rd, Hood River, OR 97031

EAST FORK IRRIGATION
SYSTEM IMPROVEMENT PLAN
SANDTRAP BYPASS IMPROVEMENTS OPTION 1
HOOD RIVER VALLEY, OREGON

SHEET NO.
C8
SHEET 8 OF 10
RECORD NO.
314222-01

File: N:\c\y2014\314222-EFID-MP-and-Telemetry-Feasibility-Analysis\CAD\PLOT\C8 SANDTRAP BYPASS IMPROVEMENTS OPTION 1.dwg TAB:C8
Plotted: 5/8/15 at 1:21pm By: RRudnick
XREFs: xtb

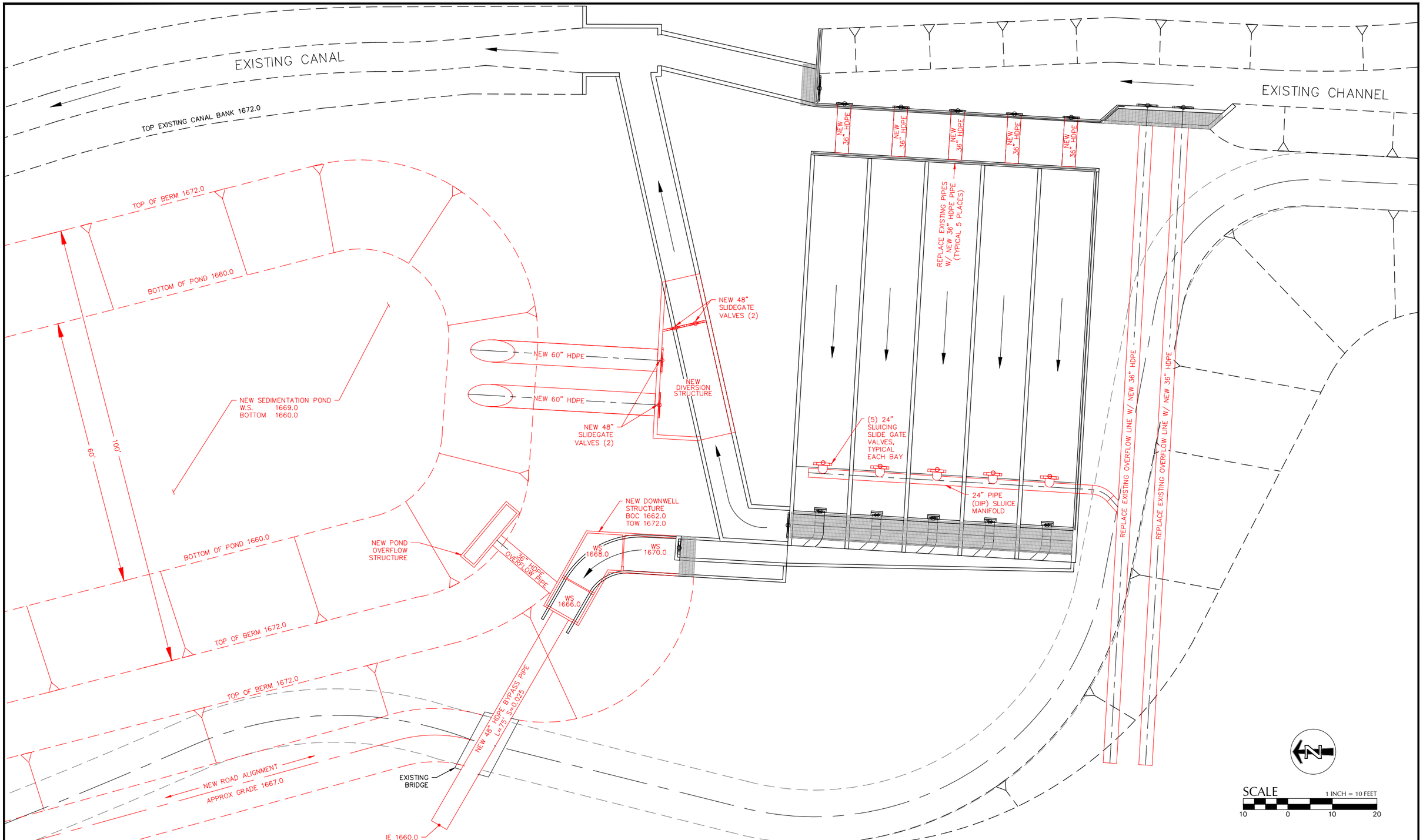

REVISION	DATE	DESCRIPTION	BY

EAST FORK IRRIGATION DISTRICT

kpff Consulting Engineers
111 S.W. Fifth Avenue, Suite 2400 Portland, OR 97204-3628
(503) 227-3251 Civil Fax (503) 274-4681
Denver Eugene Los Angeles Pasadena Phoenix Portland St. Louis
Sacramento San Diego San Francisco Seattle Tacoma

FOR INFORMATION ONLY

JOB No.:	314222.01
DESIGNED BY:	MBW
DRAWN BY:	SB
CHECKED BY:	MBW
PLOT DATE:	5/8/15 1:21pm
PLOTTED BY:	RRudnick
DWG NAME:	
TAB NAME:	

3500 Graves Rd, Hood River, OR 97031

EAST FORK IRRIGATION
SYSTEM IMPROVEMENT PLAN
SANDTRAP BYPASS IMPROVEMENTS OPTION 2
HOOD RIVER VALLEY, OREGON

SHEET NO.
C9
SHEET 9 OF 10
RECORD NO. 314222-01

22x34

File: N:\cp\2014\314222-EFID-MP-and-Telemetry-Feasibility-Analysis\CAD\PLOT\C9 SANDTRAP BYPASS IMPROVEMENTS OPTION 2.dwg TAB:C9
Plotted: 5/8/15 at 1:21pm By: RRudnick
XREFs: xlb

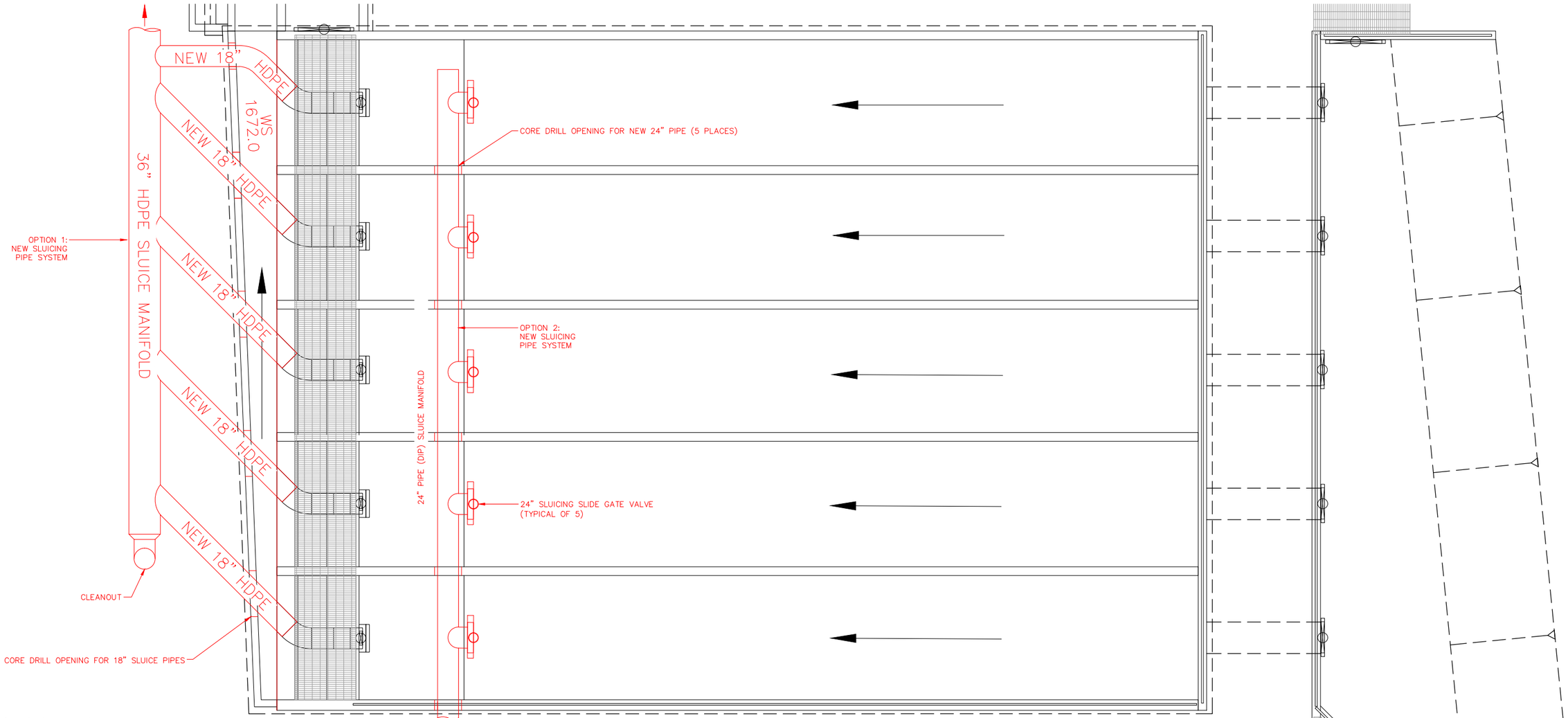

1 SAND TRAP PLAN
SCALE: 1" = 5'

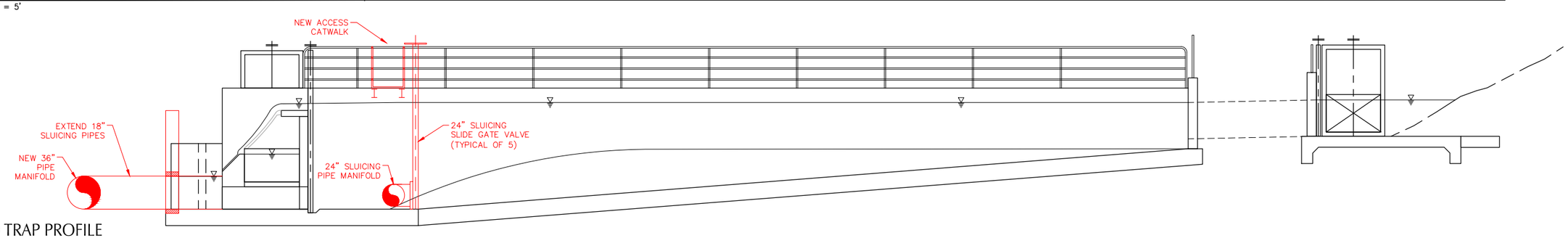

2 SAND TRAP PROFILE
SCALE: 1" = 5'

REVISION	DATE	DESCRIPTION	BY

EAST FORK IRRIGATION DISTRICT

kpff Consulting Engineers
111 S.W. Fifth Avenue, Suite 2400 Portland, OR 97204-3628
(503) 227-3251 Civil Fax (503) 274-4681
Denver Eugene Los Angeles Pasadena Phoenix Portland St. Louis
Sacramento San Diego San Francisco Seattle Tacoma

FOR INFORMATION ONLY

JOB No.:	314222.01
DESIGNED BY:	MBW
DRAWN BY:	SB
CHECKED BY:	MBW
PLOT DATE:	5/8/15 1:21pm
PLOTTED BY:	RRudnick
DWG NAME:	
TAB NAME:	

3500 Graves Rd, Hood River, OR 97031

EAST FORK IRRIGATION
SYSTEM IMPROVEMENT PLAN
SAND TRAP BYPASS - SECTIONS
HOOD RIVER VALLEY, OREGON

SHEET NO.
C10
SHEET 10 OF 10
RECORD NO.
314222-01

File: N:\e\y\2014\314222-EFID-MP-and-Telemetry-Feasibility-Analysis\CAD\PLOT\C10 SAND TRAP BYPASS - SECTIONS.dwg TAB:C10
Plotted: 5/8/15 at 1:21pm By: RRudnick
XREFs: xtb
22x34

Appendix 6

Preliminary Cost Estimates

PROJECT TITLE:	**SYSTEM IMPROVEMENT PLAN**							
SITE:	**EAST FORK IRRIGATION DISTRICT**	EST. BY:	MBW	CHECKED BY: MBW		Printed: 5/29/2015		
SPONSOR:	**East Fork Irrigation District**	DESIGN STATUS:		**CONCEPTUAL**		Revised:		
DESCRIPTION:	**Main Canal Pipeline**	Quantity		Material Cost		Labor Cost		Engineering Estimate
		Number	Unit	Unit Cost	Total	Unit Cost	Total	Unit Cost / Total
MAIN CANAL PIPELINE PROJECT SUMMARY								
- New Beginning Headbox located at sand trap.								
- New low pressure / gravity dual pipeline system.								
- Automation to control slidegate valve @ Christopher diversion.								
- New water box at Christopher pipeline diversion location.								
- Pipeline length approximately 28,275 lf (54" & 63" diameter).								
MOBILIZATION/STAGING/ROUTE PREPARATION								
General Mobilization		1	LS					25,000.00 / $25,000
Erosion Control Measures		28275	LF					1.00 / $28,275
Staging/Access Allowance		1	LS					25,000.00 / $25,000
Logging/Brush Clearing		28275	LF					1.50 / $42,413
Demolition Existing Structures		24	EA					1,500.00 / $36,000
EARTHWORK/RESTORATION								
Excavation		28275	LF					25.00 / $706,875
Trench Backfill		28275	LF					50.00 / $1,413,750
Fine Grading		90000	SY					2.00 / $180,000
Crushed Rock Surfacing		40000	SY					10.00 / $400,000
Restoration - Hydroseeding		4	ACRE					2,500.00 / $10,000
PIPING SYSTEMS								
54" HDPE Pipeline, SDR 32.5, 60 PSI		28275	LF					235.00 / $6,644,625
63" HDPE Pipeline, SDR 32.5, 60 PSI		28275	LF					210.00 / $5,937,750
VALVES & LATERALS								
Large (54"-63") Isolation Slide Gate Valve		4	EA					6,500.00 / $26,000
Large (54"-63") Heavy Duty Cast Control Slide Gate Valves		2	EA					25,000.00 / $50,000
Major EFID Diversions - Valves & Fittings		3	EA					1,750.00 / $5,250
Major EFID Diversions - Precast Water Boxes		3	EA					3,500.00 / $10,500
Landowner Diversions - Valves & Fittings		50	EA					1,000.00 / $50,000
Landowner Diversions - Precast Water Boxes		50	EA					1,500.00 / $75,000
CONCRETE & FABRICATIONS								
New Christopher Water Box		40	CY					1000.00 / $40,000
Allowance for large surge basin @ travelling screen site.		250	CY					1000.00 / $250,000
ELECTRICAL/CONTROLS								
Allowance for Power		1	LS					10,000.00 / $10,000
Allowance for Instrumentation & Telemetry		1	LS					25000.00 / $25,000
SUBTOTAL THIS PAGE								**$15,991,438**
CONTRACTOR OH&P (10%)								**$1,599,144**
DESIGN CONTINGENCY (15%)								**$2,398,716**
CONSTRUCTION CONTINGENCY (15%)								**$2,398,716**
TOTAL								**$22,388,013**

THIS OPINION OF PROBABLE CONSTRUCTION COST HAS BEEN PREPARED USING STANDARD ENGINEERING ESTIMATE PROCEDURES. KPFF HAS NO CONTROL OVER ACTUAL CONTRACTOR COSTS, BIDDING, OR MARKET CONDITIONS. WE RECOMMEND THAT THESE COSTS BE VERIFIED WITH CONTRACTOR BIDS PRIOR TO MAKING ANY FINANCIAL COMMITMENTS.

PROJECT TITLE:	SYSTEM IMPROVEMENT PLAN							
SITE:	EAST FORK IRRIGATION DISTRICT	EST. BY:	MBW	CHECKED BY: MBW		Printed: 5/29/2015		
SPONSOR:	East Fork Irrigation District	DESIGN STATUS:		CONCEPTUAL		Revised:		
DESCRIPTION:	Eastside Lateral Pipeline	Quantity		Material Cost		Labor Cost		Engineering Estimate
		Number	Unit	Unit Cost	Total	Unit Cost	Total	Unit Cost / Total
EASTSIDE LATERAL PIPELINE PROJECT SUMMARY								
- New Water Box 4 located at higher elevation to provide 50 feet head.								
- New low medium pressure pipeline system.								
- Automation to control slidegate valve @ Water Box 1.								
- Leave existing 30" steel pipeline in place.								
- Pipeline length approximately 31,000 lf (48" & 36" diameter).								
MOBILIZATION/STAGING/ROUTE PREPARATION								
General Mobilization		1	LS					25,000.00 / $25,000
Erosion Control Measures		31000	LF					1.00 / $31,000
Staging/Access Allowance		1	LS					25,000.00 / $25,000
Logging/Brush Clearing		31000	LF					1.50 / $46,500
Demolition Existing Structures		20	EA					1,500.00 / $30,000
Demolition / Removal Water Box 4		1	EA					5,000.00 / $5,000
EARTHWORK/RESTORATION								
Excavation		31000	LF					20.00 / $620,000
Trench Backfill		31000	LF					40.00 / $1,240,000
Fine Grading		90000	SY					2.00 / $180,000
Crushed Rock Surfacing		40000	SY					10.00 / $400,000
Restoration - Hydroseeding		4	ACRE					2,500.00 / $10,000
PIPING SYSTEMS								
48" HDPE Pipeline, SDR 32.5, 60 PSI		15000	LF					185.00 / $2,775,000
36" HDPE Pipeline, SDR 32.5, 60 PSI		16000	LF					110.00 / $1,760,000
24" Overflow Pipe to Neal Creek		1000	LF					60.00 / $60,000
VALVES & LATERALS								
48" Lower Water Box Isolation Slide Gate Valve		1	EA					6,500.00 / $6,500
Major EFID Diversions - Valves & Fittings		7	EA					1,750.00 / $12,250
Major EFID Diversions - Precast Water Boxes		7	EA					3,500.00 / $24,500
Landowner Diversions - Valves & Fittings		35	EA					1,000.00 / $35,000
Landowner Diversions - Precast Water Boxes		35	EA					1,500.00 / $52,500
CONCRETE & FABRICATIONS								
Lower Pipeline Water Box (25' x 50' x 12' Deep)		100	CY					1000.00 / $100,000
ELECTRICAL/CONTROLS								
Allowance for Power		1	LS					10,000.00 / $10,000
Allowance for Instrumentation & Telemetry		1	LS					25000.00 / $25,000
SUBTOTAL THIS PAGE								**$7,473,250**
CONTRACTOR OH&P (10%)								**$747,325**
DESIGN CONTINGENCY (15%)								**$1,120,988**
CONSTRUCTION CONTINGENCY (15%)								**$1,120,988**
TOTAL								**$10,462,550**

THIS OPINION OF PROBABLE CONSTRUCTION COST HAS BEEN PREPARED USING STANDARD ENGINEERING ESTIMATE PROCEDURES. KPFF HAS NO CONTROL OVER ACTUAL CONTRACTOR COSTS, BIDDING, OR MARKET CONDITIONS. WE RECOMMEND THAT THESE COSTS BE VERIFIED WITH CONTRACTOR BIDS PRIOR TO MAKING ANY FINANCIAL COMMITMENTS.

PROJECT TITLE:	SYSTEM IMPROVEMENT PLAN								
SITE:	EAST FORK IRRIGATION DISTRICT	EST. BY:	MBW	CHECKED BY: MBW		Printed: 5/29/2015		kpff	
SPONSOR:	East Fork Irrigation District	DESIGN STATUS:		CONCEPTUAL		Revised:			
DESCRIPTION:	Dukes Valley Pipeline	Quantity		Material Cost		Labor Cost		Engineering Estimate	
		Number	Unit	Unit Cost	Total	Unit Cost	Total	Unit Cost	Total
DUKES VALLEY PIPELINE PROJECT SUMMARY									
- New beginning Water Box @ beginning of Dukes Valley ditch.									
- New low pressure (gravity) pipeline system.									
- Automation to control slidegate valve @ Cameron Ditch Water Box.									
- New enlarged Cameron Ditch Water Box with control slidegate valve.									
- Leave existing 30" steel pipeline in place.									
- Pipeline length approximately 21,000 lf (42" & 36" diameter).									
MOBILIZATION/STAGING/ROUTE PREPARATION									
General Mobilization		1	LS					25,000.00	$25,000
Erosion Control Measures		21000	LF					1.00	$21,000
Staging/Access Allowance		1	LS					25,000.00	$25,000
Logging/Brush Clearing		21000	LF					1.50	$31,500
Demolition Existing Structures		12	EA					1,500.00	$18,000
EARTHWORK/RESTORATION									
Excavation		21000	LF					18.00	$378,000
Trench Backfill		21000	LF					35.00	$735,000
Fine Grading		60000	SY					2.00	$120,000
Crushed Rock Surfacing		28000	SY					10.00	$280,000
Restoration - Hydroseeding		2	ACRE					2,500.00	$5,000
PIPING SYSTEMS									
42" HDPE Pipeline, SDR 32.5, 60 PSI		900	LF					150.00	$135,000
36" HDPE Pipeline, SDR 32.5, 60 PSI		7500	LF					110.00	$825,000
30" HDPE Pipeline, SDR 32.5, 60 PSI		12500	LF					75.00	$937,500
VALVES & LATERALS									
42" Cameron Hill Water Box Actuated Slidegate Valve		1	EA					10,000.00	$10,000
36" Lower Water Box Isolation Slide Gate Valve		1	EA					4,500.00	$4,500
Major EFID Diversions - Valves & Fittings		3	EA					1,750.00	$5,250
Major EFID Diversions - Precast Water Boxes		3	EA					3,500.00	$10,500
Landowner Diversions - Valves & Fittings		22	EA					1,000.00	$22,000
Landowner Diversions - Precast Water Boxes		22	EA					1,500.00	$33,000
CONCRETE & FABRICATIONS									
Cameron Hill Water Box		20	CY					1000.00	$20,000
Lower Pipeline Water Box (20' x 40' x 12' Deep)		75	CY					1000.00	$75,000
ELECTRICAL/CONTROLS									
Allowance for Power		1	LS					10,000.00	$10,000
Allowance for Instrumentation & Telemetry		1	LS					25000.00	$25,000
SUBTOTAL THIS PAGE									**$3,751,250**
CONTRACTOR OH&P (10%)									**$375,125**
DESIGN CONTINGENCY (15%)									**$562,688**
CONSTRUCTION CONTINGENCY (15%)									**$562,688**
TOTAL									**$5,251,750**

THIS OPINION OF PROBABLE CONSTRUCTION COST HAS BEEN PREPARED USING STANDARD ENGINEERING ESTIMATE PROCEDURES. KPFF HAS NO CONTROL OVER ACTUAL CONTRACTOR COSTS, BIDDING, OR MARKET CONDITIONS. WE RECOMMEND THAT THESE COSTS BE VERIFIED WITH CONTRACTOR BIDS PRIOR TO MAKING ANY FINANCIAL COMMITMENTS.

PROJECT TITLE:	**SYSTEM IMPROVEMENT PLAN**							
SITE:	**EAST FORK IRRIGATION DISTRICT**	EST. BY:	MBW	CHECKED BY:	MBW	Printed:	5/29/2015	kpff
SPONSOR:	**East Fork Irrigation District**	DESIGN STATUS:		**CONCEPTUAL**		Revised:		
DESCRIPTION:	**Sublateral Pipeline Projects**	Quantity		System Data				Engineering Estimate
		Number	Unit	Lateral	Line Size			Unit Cost / Total
SUBLATERAL PIPELINE COSTS								
Mooney Diversion		3000	LF	Main Canal	3"			$12.00 / $36,000
Cameron Hill		1500	LF	Dukes Valley	6"			$18.00 / $27,000
Cherry Hill		1200	LF	Dukes Valley	3"			$12.00 / $14,400
Sheirbon Hill		8000	LF	Dukes Valley	6"			$18.00 / $144,000
Sweet Line		1500	LF	Dukes Valley	4"			$12.00 / $18,000
Rock Acres		1000	LF	Dukes Valley	4"			$12.00 / $12,000
Wheeler Road		0	LF	Dukes Valley	6"			$18.00 / $0
Marsh-Chamberlin		13000	LF	Dukes Valley	18"			$35.00 / $455,000
Shute Road (new line to Summit)		1500	LF	Dukes Valley	4"			$12.00 / $18,000
Winklebleck		10000	LF	Central Lateral	6"			$18.00 / $180,000
Gilkerson		5000	LF	Central Lateral	6"			$18.00 / $90,000
Bietler		8000	LF	Central Lateral	6"			$18.00 / $144,000
PMSW		0	LF	Central Lateral	n/a			
Chipping Line		25000	LF	Central Lateral	16"			$35.00 / $875,000
Oana		30000	LF	Central Lateral	18"			$35.00 / $1,050,000
Allison		4500	LF	Central Lateral	8"			$18.00 / $81,000
Rasmussen		2000	LF	Eastside	12"			$25.00 / $50,000
Craig Rat		10000	LF	Eastside	8"			$18.00 / $180,000
Loop Line		0	LF	Eastside	n/a			$0.00
Dethman Swyers		0	LF	Eastside	n/a			$0.00
Paasch		1500	LF	Eastside	8"			$18.00 / $27,000
Thomson		1000	LF	Eastside	8"			$18.00 / $18,000
Lariza		2000	LF	Eastside	6"			$18.00 / $36,000
Panorama Point		2,000	LF	Eastside	2"			$12.00 / $24,000
Hukari		0	LF	Eastside	n/a			$0.00
Tiffeny		10000	LF	Eastside	2"			$12.00 / $120,000
NOTE: SUBLATERAL PIPELINE ESTIMATING ALLOWANCES								
Pipe Diameter: 2"-4"	*$12/lf*							
Pipe Diameter: 6"-8"	*$18/lf*							
Pipe Diameter: 10"-12"	*$25/lf*							
Pipe Diameter: 15"-18"	*$35/lf*							
Pipe Diameter: 21"-24"	*$45/lf*							
SUBTOTAL THIS PAGE								**$3,563,400**
CONTRACTOR OH&P (10%)								**$356,340**
DESIGN CONTINGENCY (10%)								**$356,340**
CONSTRUCTION CONTINGENCY (10%)								**$356,340**
TOTAL								**$4,632,420**

THIS OPINION OF PROBABLE CONSTRUCTION COST HAS BEEN PREPARED USING STANDARD ENGINEERING ESTIMATE PROCEDURES. KPFF HAS NO CONTROL OVER ACTUAL CONTRACTOR COSTS, BIDDING, OR MARKET CONDITIONS. WE RECOMMEND THAT THESE COSTS BE VERIFIED WITH CONTRACTOR BIDS PRIOR TO MAKING ANY FINANCIAL COMMITMENTS.

PROJECT TITLE:	**SYSTEM IMPROVEMENT PLAN**							
SITE:	**EAST FORK IRRIGATION DISTRICT**	EST. BY:	MBW	CHECKED BY:	MBW	Printed:	5/29/2015	kpff
SPONSOR:	**East Fork Irrigation District**	DESIGN STATUS:		**CONCEPTUAL**		Revised:		
DESCRIPTION:	**Sublateral Pipeline Projects**	Quantity		System Data				Engineering Estimate
		Number	Unit	Lateral	Line Size			Unit Cost / Total
SUBLATERAL PIPELINE COSTS								
Mooney Diversion		1	ea	Main Canal	3"			$1,500.00 / $1,500
Cameron Hill		0	ea	Dukes Valley	6"			$3,500.00 / $0
Cherry Hill		1	ea	Dukes Valley	3"			$1,500.00 / $1,500
Sheirbon Hill		1	ea	Dukes Valley	6"			$3,500.00 / $3,500
Sweet Line		1	ea	Dukes Valley	4"			$1,500.00 / $1,500
Rock Acres		0	ea	Dukes Valley	4"			$1,500.00 / $0
Wheeler Road		1	ea	Dukes Valley	6"			$3,500.00 / $3,500
Marsh-Chamberlin		2	ea	Dukes Valley	18"			$12,500.00 / $25,000
Shute Road (new line to Summit)		1	ea	Dukes Valley	4"			$1,500.00 / $1,500
Winklebleck		2	ea	Central Lateral	6"			$3,500.00 / $7,000
Gilkerson		2	ea	Central Lateral	6"			$3,500.00 / $7,000
Bietler		2	ea	Central Lateral	6"			$3,500.00 / $7,000
PMSW		1	ea	Central Lateral	n/a			$0.00 /
Chipping Line		3	ea	Central Lateral	16"			$12,500.00 / $37,500
Oana		4	ea	Central Lateral	18"			$12,500.00 / $50,000
Allison		1	ea	Central Lateral	8"			$3,500.00 / $3,500
Rasmussen		1	ea	Eastside	12"			$7,500.00 / $7,500
Craig Rat		1	ea	Eastside	8"			$3,500.00 / $3,500
Loop Line		2	ea	Eastside	n/a			$0.00 /
Dethman Swyers		2	ea	Eastside	n/a			$0.00 /
Paasch		1	ea	Eastside	8"			$3,500.00 / $3,500
Thomson		1	ea	Eastside	8"			$3,500.00 / $3,500
Lariza		1	ea	Eastside	6"			$3,500.00 / $3,500
Panorama Point		1	ea	Eastside	2"			$1,500.00 / $1,500
Hukari		1	ea	Eastside	n/a			$0.00 /
Tiffeny		2	ea	Eastside	2"			$1,500.00 / $3,000
NOTE: SUBLATERAL PRV ESTIMATING ALLOWANCES								
Pipe Diameter: 2"-4"	*$1,500/eaf*							
Pipe Diameter: 6"-8"	*$3,500/ea*							
Pipe Diameter: 10"-12"	*$7,500/ea*							
Pipe Diameter: 15"-18"	*$12,500/ea*							
Pipe Diameter: 21"-24"	*$20,000/ea*							
SUBTOTAL THIS PAGE								**$174,500**
CONTRACTOR OH&P (10%)								**$17,450**
DESIGN CONTINGENCY (10%)								**$17,450**
CONSTRUCTION CONTINGENCY (10%)								**$17,450**
TOTAL								**$226,850**

THIS OPINION OF PROBABLE CONSTRUCTION COST HAS BEEN PREPARED USING STANDARD ENGINEERING ESTIMATE PROCEDURES. KPFF HAS NO CONTROL OVER ACTUAL CONTRACTOR COSTS, BIDDING, OR MARKET CONDITIONS. WE RECOMMEND THAT THESE COSTS BE VERIFIED WITH CONTRACTOR BIDS PRIOR TO MAKING ANY FINANCIAL COMMITMENTS.

PROJECT TITLE:	**SYSTEM IMPROVEMENT PLAN**							
SITE:	**EAST FORK IRRIGATION DISTRICT**	EST. BY:	MBW	CHECKED BY: MBW		Printed: 5/29/2015		
SPONSOR:	**East Fork Irrigation District**	DESIGN STATUS:		**CONCEPTUAL**		Revised:		
DESCRIPTION:	**Highline Lateral Pipeline**	Quantity		Material Cost		Labor Cost		Engineering Estimate
		Number	Unit	Unit Cost	Total	Unit Cost	Total	Unit Cost / Total
MOBILIZATION/STAGING/ROUTE PREPARATION								
General Mobilization		1	LS					25,000.00 / $25,000
Erosion Control Measures		13000	LF					0.50 / $6,500
Logging/Brush Clearing		13000	LF					0.50 / $6,500
Demolition Existing Structures		12	EA					500.00 / $6,000
EARTHWORK/RESTORATION								
Excavation		13000	LF					8.00 / $104,000
Trench Backfill		13000	LF					15.00 / $195,000
Crushed Rock Surfacing		0	SY					10.00 / $0
Restoration - Hydroseeding		1	ACRE					2,500.00 / $2,500
PIPING SYSTEMS								
18" PIP PVC Pipeline, 125 PSI		6500	LF					30.00 / $195,000
12" PIP PVC Pipeline, 125 PSI		6500	LF					22.50 / $146,250
VALVES & LATERALS								
Major EFID Diversions - Valves & Fittings		3	EA					750.00 / $2,250
Major EFID Diversions - Precast Water Boxes		3	EA					1,500.00 / $4,500
Landowner Diversions - Valves & Fittings		12	EA					350.00 / $4,200
Landowner Diversions - Precast Water Boxes		12	EA					500.00 / $6,000
ELECTRICAL/CONTROLS								
Allowance for Power		0	LS					
Allowance for Instrumentation & Telemetry		0	LS					
SUBTOTAL THIS PAGE								**$703,700**
CONTRACTOR OH&P (10%)								**$70,370**
DESIGN CONTINGENCY (10%)								**$70,370**
CONSTRUCTION CONTINGENCY (10%)								**$70,370**
TOTAL								**$914,810**

THIS OPINION OF PROBABLE CONSTRUCTION COST HAS BEEN PREPARED USING STANDARD ENGINEERING ESTIMATE PROCEDURES. KPFF HAS NO CONTROL OVER ACTUAL CONTRACTOR COSTS, BIDDING, OR MARKET CONDITIONS. WE RECOMMEND THAT THESE COSTS BE VERIFIED WITH CONTRACTOR BIDS PRIOR TO MAKING ANY FINANCIAL COMMITMENTS.

PROJECT TITLE:	**SYSTEM IMPROVEMENT PLAN**							
SITE:	**EAST FORK IRRIGATION DISTRICT**	EST. BY:	MBW	CHECKED BY: MBW		Printed: 5/29/2015		
SPONSOR:	**East Fork Irrigation District**	DESIGN STATUS:		**CONCEPTUAL**		Revised:		
DESCRIPTION:	**Sand Trap Bypass Improvements**	Quantity		Material Cost		Labor Cost		Engineering Estimate
		Number	Unit	Unit Cost	Total	Unit Cost	Total	Unit Cost / Total
MOBILIZATION/STAGING								
General Mobilization		1	LS					$25,000.00 / $25,000
Demolition Existing Bypass Curved Downwell & Flume		50	CY					$100.00 / $5,000
Demolition / Removal Existing 30" Flushing Pipes		300	LF					$10.00 / $3,000
Demolition / Removal Existing 36" Supply Pipes		60	CY					$50.00 / $3,000
Core-Drilling Existing Walls for New 24" Flushing Pipeline		5	EA					$1,500.00 / $7,500
EARTHWORK/RESTORATION								
Pipelines Trench Excavation		250	CY					$12.00 / $3,000
Pipelines Trench Backfill		250	CY					$20.00 / $5,000
Bypass Excavation		275	CY					$12.00 / $3,300
Bypass Backfill		125	CY					$20.00 / $2,500
Crushed Rock Surfacing		1200	SY					$15.00 / $18,000
Riprap		25	CY					$100.00 / $2,500
PIPING SYSTEMS								
30" HDPE Flushing Pipes, SDR 32.5, 60 PSI		300	LF					$75.00 / $22,500
36" HDPE Supply Pipes, SDR 32.5, 60 PSI		75	LF					$85.00 / $6,375
48" HDPE Bypass Pipe, SDR 32.5, 60 PSI		75	LF					$125.00 / $9,375
24" Galv Steel Sediment Flushing Pipe		80	LF					$200.00 / $16,000
24" X 18" Galv Steel Flanged Tees		5	EA					$1,500.00 / $7,500
30" X 24" Wye HDPE Fitting		1	EA					$1,000.00 / $1,000
Allowance for Grouting Pipe Openings in Existing Walls		12	EA					$750.00 / $9,000
Allowance for Pipe & Slidegate Supports		1	LS					$12,000.00 / $12,000
VALVES & FABRICATIONS								
Allowance Concrete Embeds & Anchors		2500	LBS					$2.50 / $6,250
Catwalk Structure		3500	LBS					$2.50 / $8,750
Grating		200	SF					$20.00 / $4,000
Handrails & Ladder		200	LF					$25.00 / $5,000
18" SS Slidegate Valves - Sediment Sluicing		5	EA					$3,500.00 / $17,500
CONCRETE STRUCTURES								
Bypass Downwell Structure		55	CY					$1,000.00 / $55,000
SUBTOTAL THIS PAGE								**$258,050**
CONTRACTOR OH&P (10%)								**$25,805**
DESIGN CONTINGENCY (10%)								**$25,805**
CONSTRUCTION CONTINGENCY (10%)								**$25,805**
TOTAL								**$335,465**

THIS OPINION OF PROBABLE CONSTRUCTION COST HAS BEEN PREPARED USING STANDARD ENGINEERING ESTIMATE PROCEDURES. KPFF HAS NO CONTROL OVER ACTUAL CONTRACTOR COSTS, BIDDING, OR MARKET CONDITIONS. WE RECOMMEND THAT THESE COSTS BE VERIFIED WITH CONTRACTOR BIDS PRIOR TO MAKING ANY FINANCIAL COMMITMENTS.

PROJECT TITLE:	**SYSTEM IMPROVEMENT PLAN**							
SITE:	**EAST FORK IRRIGATION DISTRICT**	EST. BY:	MBW	CHECKED BY: MBW		Printed: 5/29/2015		
SPONSOR:	**East Fork Irrigation District**	DESIGN STATUS:		**CONCEPTUAL**		Revised:		
DESCRIPTION:	**Sediment Settling Improvements**	Quantity		Material Cost		Labor Cost		Engineering Estimate
		Number	Unit	Unit Cost	Total	Unit Cost	Total	Unit Cost / Total
MOBILIZATION/STAGING								
General Mobilization		1	LS					$25,000.00 / $25,000
Demolition Segment Existing Supply Flume		25	CY					$100.00 / $2,500
General Logging & Clearing Existing County Property		1	LS					$5,000.00 / $5,000
EARTHWORK/RESTORATION								
Sediment Pond Excavation		6500	CY					$10.00 / $65,000
Sediment Pond Berm Construction		6500	CY					$12.00 / $78,000
Sediment Pond Berm Core Clay Fill Import		2500	CY					$25.00 / $62,500
4"-6" Pit Run Pond Lining		1000	CY					$50.00 / $50,000
Crushed Rock Surfacing		2500	SY					$15.00 / $37,500
Riprap		50	CY					$100.00 / $5,000
PIPING SYSTEMS								
30" HDPE Overflow Pipe, SDR 32.5, 60 PSI		40	LF					$75.00 / $3,000
54" HDPE Supply Pipes, SDR 32.5, 60 PSI		80	LF					$175.00 / $14,000
VALVES & FABRICATIONS								
54" Isolation Slidegate Valves		4	EA					$7,500.00 / $30,000
Allowance 50' V-Notch Launder Weir Fiberglass Fabrication		1	EA					$7,500.00 / $7,500
CONCRETE STRUCTURES								
Diversion Structure into New Sediment Pond		65	CY					$1,000.00 / $65,000
Pipeline Headbox		50	CY					$1,000.00 / $50,000
Sediment Pond Supply Weir		25	CY					$1,000.00 / $25,000
Sediment Pond Overflow Weir		10	CY					$1,000.00 / $10,000
SUBTOTAL THIS PAGE								**$535,000**
CONTRACTOR OH&P (10%)								**$53,500**
DESIGN CONTINGENCY (10%)								**$53,500**
CONSTRUCTION CONTINGENCY (10%)								**$53,500**
TOTAL								**$695,500**

THIS OPINION OF PROBABLE CONSTRUCTION COST HAS BEEN PREPARED USING STANDARD ENGINEERING ESTIMATE PROCEDURES. KPFF HAS NO CONTROL OVER ACTUAL CONTRACTOR COSTS, BIDDING, OR MARKET CONDITIONS. WE RECOMMEND THAT THESE COSTS BE VERIFIED WITH CONTRACTOR BIDS PRIOR TO MAKING ANY FINANCIAL COMMITMENTS.

Appendix 7

Telemetry System Vendor Data & Cost Estimates

440 E. Corporate Dr., Suite 103, Meridian, ID 83642
ph. 208-288-2181 / fx. 208-288-2182
www.dcengineering.net

Technical Memorandum

To: Mark Wharry, PE
KPFF

From: Ryan Daniel, PE

Date: May 29, 2015

Re: Telemetry Master Plan

Introduction, Purpose, and Objectives

The East Fork Irrigation District (EFID) is evaluating telemetry monitoring and control improvements for their irrigation system. The purpose of this technical memorandum is to present the telemetry master plan. The memo will provide an understanding of the telemetry system requirements, hardware and software analysis, remote site communication options, and a recommended solution.

System Requirements

The system must be able to monitor 9 remote sites initially, with the capability to be easily expanded in the future. A central monitoring system at the EFID office will allow operators and managers to view the system via a graphical user interface (HMI). The HMI shall allow remote web access for simple viewing of the system from remote devices such as laptops or tablets. Remote access shall also be provided for control system programming and troubleshooting. Standard, non-proprietary, hardware and software typically used for remote telemetry systems will be used to allow easy installation, maintenance and future expansion as well as serviceable by multiple entities.

Hardware Analysis

Multiple options are available for the equipment at each remote monitoring and control site. Some sites will be monitoring only and will have a very small number of inputs. Other sites will be both monitoring and control and have more inputs. Below are alternative approaches to the hardware required to provide the desired system functionality. These alternatives all include Allen Bradley (AB) components. There are several other vendors available, however the AB equipment is very widely used, robust, and well supported and is therefore used as the primary vendor in this report. Please note, the estimates below are based on the engineer's opinion of probable cost and are only a high level estimate.

Alternative No. 1 – Allen Bradley MicroLogix PLC panel at each site

Install an Allen Bradley MicroLogix PLC panel at each site. This alternative allows for monitoring or control at any site and keeps all sites consistent. It would provide EFID with a lot of versatility for future expansion, including addition of devices at various sites or potentially adding new sites. Below is the engineer's opinion of probable cost for this alternative:

Alternative #1	Cost Per Site	Total Cost*
Hardware (control panel and instruments)	$4,360.00	$35,790.00
Panel Build Labor	$900.00	$8,100.00
Installation (includes panel and instrumentation)	$760.00	$6,840.00
* Full scope of parts are not required at each site	TOTAL	$50,730.00

Advantages:

- The AB MicroLogix platform is very robust and widely used, requiring very little maintenance, and because of install base a large number of technicians are familiar with the platform.
- With a PLC at each site system control can be maintained even during network outages.
- Reduced program development time and cost at system startup.
- System is easily customizable, offering analog, digital and specialty modules that cover a wide range of applications.
- Full support for standard EtherNet/IP networks

Disadvantages:

- Higher cost due to having a mid-level controller at each site.
- The MicroLogix line of PLCs has been out a number of years and newer products with additional capabilities are available. AB fully supports the MicroLogix line currently.
- Providing full PLC panels at each site would require longer installation time

Alternative No. 2 – Central Allen Bradley CompactLogix PLC at district office with distributed I/O at each remote site

A more costly alternative for EFID would be to install an AB CompactLogix PLC with distributed I/O at each site. This would provide a very powerful central PLC that would both monitor and control all of the remote sites. Below is the engineer's opinion of probable cost for this alternative:

Alternative #2	Cost Per Site	Total Cost*
Hardware (control panel and instruments)	$6,665.00	$39,580.00
Panel Build Labor	$900.00	$8,100.00
Installation (includes panel and instrumentation)	$760.00	$6,840.00
* Full scope of parts are not required at each site	TOTAL	$54,520.00

Advantages:

- The AB CompactLogix platform is very robust and widely used, requiring very little maintenance, and because of install base a large number of technicians are familiar with the platform.
- This is a very powerful controller and is the one of the latest models utilizing the highest level programming software.
- Reduced program development time and cost at system startup.
- System is easily customizable, offering analog, digital and specialty modules that cover a wide range of applications.
- Full support for standard EtherNet/IP networks.

Disadvantages:

- Less versatility for future expansion as the I/O at the remote sites is "dumb" I/O that does not have a local processor for control functions.
- With a central PLC, if the network connection to the central PLC goes down, control of the whole system is lost.

<u>Alternative No. 3 – Allen Bradley Micro800 PLC panels at each site</u>

Installation of Allen Bradley Micro800 PLC system control panels at each site. This is the most cost effective solution that would still offer good future expansion capabilities. Below is the engineer's opinion of probable cost for this alternative:

Alternative #3 (820)	Cost Per Site	Total Cost*
Hardware (control panel and instruments)	$3,730.00	$31,170.00
Panel Build Labor	$900.00	$8,100.00
Installation (includes panel and instrumentation)	$760.00	$6,840.00
* Full scope of parts are not required at each site	TOTAL	$46,110.00

Advantages:

- Less costly than MicroLogix and CompactLogix PLC's but still offer much of the same versatility.
- With a PLC at each site system control can be maintained even during network outages.
- Due to the low cost of the controller each site can have very similar and standard setup.
- Sites with fewer I/O points could be equipped with the smaller 820 controllers, which offer up to 20 points. Larger sites could be equipped with the Micro850 controllers which offer 24 or 48 points, and have the ability to add I/O expansion to support up to 132 points if needed.
- Controllers are capable of data-logging, remote access, and communication via Ethernet/IP.

Disadvantages:

- Not as many options for modules as a MicroLogix or CompactLogix system offers.
- Less widely used system, so fewer trained technicians.
- Programming software is not as capable as others for complex control routines.

Software Analysis

To meet the system requirement of standard Supervisory Control and Data Acquisition (SCADA) system software for a telemetry project like this, a few vendors have very quality solutions. The two main vendors that would give very robust and flexible solutions that many programmers are familiar with and able to work on are WonderWare and Rockwell Software. Both vendors offer HMI software that can easily communicate with all three of the alternative hardware solutions.

This solution would include either WonderWare InTouch HMI software, or Rockwell FactoryTalk View SE HMI software. This software would be installed on a local PC at the district office, and would have an operator workstation with computer monitor displaying system status. Alarm notification software would also be installed on this PC and will be configured to notify operators on a priority schedule. Notification can be either phone calls or email notifications. Data logging is fairly limited and will be setup as local data logging through the HMI software, and will not include a separate historian as they add a significant cost. The HMI software will also include a component that will web enable the HMI, allowing operators to remotely access and interact with the system through secure web connected devices such as laptops and tablets.

Communications Analysis

DC Engineering performed a software radio path study and due to the terrain and locations of the sites, we have determined that the terrain is not ideal for radio communication. The study showed that there is virtually no line-of-sight between locations, making reliable communication via radios almost impossible without the additional cost of adding antenna towers. This study tested the possible transmitting and receiving paths between each site. Below is an example of the data that was used to determine that radio communication is not an ideal solution for EFID. This is the path between the Headwork's site and CL Distribution site. Green represents the terrain, red is the line of sight, and blue represents the Fresnel zone

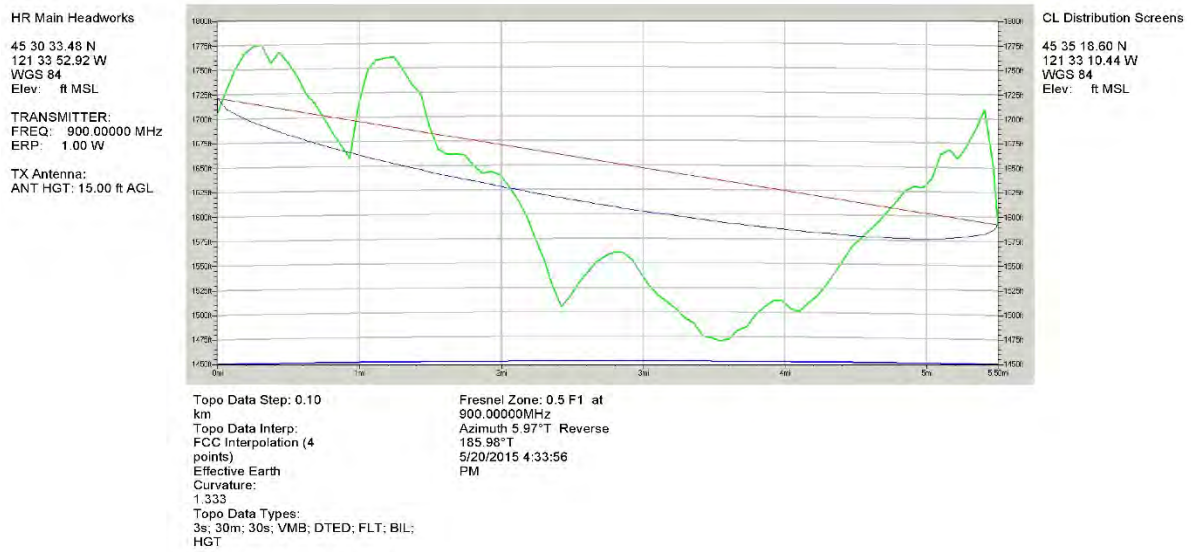

For many of the same reasons that radio communication is not ideal for the terrain, cellular communication would have the same issue of unreliability due to poor signal at most of the sites.

The best solution for communication between sites would be to run a phone line from the nearest existing service to each of the remote sites. The additional cost of installing and maintaining these phone lines would offset the significant costs of antenna towers or possible communication failures due to unreliable signal via cell phone or radio. A drawback to the phone line system is the monthly phone line fees.

Recommendations

DC Engineering has reviewed and evaluated the various hardware, software, and communications devices to meet the telemetry system requirements. For the hardware solution, we recommend alternative number 3 – Allen Bradley Micro800 PLC panels at each site. Alternative 3 is a very cost effective solution that maintains high reliability and flexibility with expandable controllers at every site.

For the SCADA software solution, both WonderWare and Rockwell Software are very comparable. Due to Rockwell Software being an Allen Bradley product and the PLCs being Allen Bradley, we recommend using the Rockwell Software. This will allow very easy and tight integration between the remote sites and the central SCADA system. Many system integrators are familiar with this software and will be able to implement and make changes to the system in the future.

The communications with the remote sites are a key component of this project. Our analysis of the site layouts clearly show that radios and cell phone systems will be very unreliable. Research into phone line availability shows that all sites can be reached with phone service. Phone lines will allow installing remote access modems to give dial in access to each of the PLCs. Utilizing the hardwired phone connections will give the best possible communications reliability.

LISTEN. THINK. SOLVE.℠

ESSENTIAL COMPONENTS

LOGIC

MicroLogix 1100 / 1763 Small Logic Controllers

MicroLogix 1100

With online editing and a built-in 10/100 Mbps EtherNet/IP port for peer-to-peer messaging, the MicroLogix 1100 controller adds greater connectivity and application coverage to the MicroLogix™ family of Allen-Bradley controllers. This next generation controller's built-in LCD screen displays controller status, I/O status, and simple operator messages; enables bit and integer manipulation; offers digital trim pot functionality, and a means to make operating mode changes (Prog / Remote / Run).

By combining all the features that have made the existing MicroLogix controllers successful with industrial EtherNet/IP, embedded DH-485 / Modbus™ RTU networking, and the ability for an operator to interface to the control program through the LCD screen, the MicroLogix 1100 controller may be all you need and more.

APPLICATIONS:

The MicroLogix 1100 is particularly well suited to meet the needs of SCADA RTU, packaging, and material handling applications. With even more memory for data logging and recipe than the MicroLogix 1500, the MicroLogix 1100 is great for remote monitoring and for applications that are memory intensive, but require limited I/O.

Features:

- Online editing
- Built-in 10/100 Mbps EtherNet/IP port for messaging
- Isolated RS-232/RS-485 combo port
- Ten digital inputs, two analog inputs, six digital outputs on each controller
- One embedded 40kHz high-speed counter (on controllers with dc inputs)
- Two 40kHz high-speed PTO/PWM outputs (on controllers with dc outputs)
- Embedded LCD for controller and I/O status and simple operator interface for messages, and bit/integer monitoring and manipulation
- 4K words user program memory and 4K words user data memory
- Up to 128K bytes for data logging and 64K bytes for recipe
- Embedded Web server
- Email support
- CIP generic messaging support

MicroLogix 1100 Controller

The MicroLogix 1100 combines all the features you demand in a compact controller, with EtherNet/IP messaging, online editing, a built-in LCD screen on every controller and a versatile combination of I/O.

The embedded 10/100 Mbps EtherNet/IP port for peer-to-peer messaging offers users high speed connectivity between controllers and the ability to access, monitor and program from the factory floor to anywhere an Ethernet connection is available. An embedded Web server allows a user to custom configure data from the controller to be displayed as a web page. Furthermore, a second RS-232/RS-485 combo port provides a host of different point-to-point and network protocols.

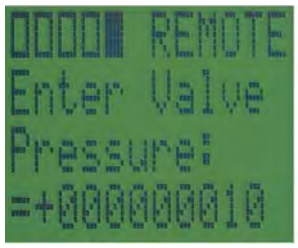

With online editing, modifications can be made to a program while it is running, making fine tuning of an operating control system possible, including PID loops.

The built-in LCD screen allows the user to monitor data within the controller, optionally modify that data, and interact with the control program. The LCD displays status for embedded digital I/O and controller functions, and acts as a pair of digital trim pots to allow a user to tweak and tune a program. The user program can now use a new LCD instruction to send, and optionally receive, information through the display, providing real time program interaction. A user configurable start up screen allows the user to personalize the controller to identify the machine it is used on, the designer of the control system, or the name of the company that uses it. Communication port status and communication toggle function, operating mode status, and battery status monitoring are among the many features of the LCD screen.

For small applications, the embedded I/O in this controller may represent all of the control required. There are 10 digital inputs, 6 digital outputs, and 2 analog inputs on every controller, with the ability to add digital, analog, RTD, and thermocouple modules to customize the controller for your application. On versions of the controller with dc inputs, there is a high speed counter, and on the dc output version, two PTO/PWM (pulse train outputs and pulse width modulated) outputs, enabling the controller to support simple motion applications.

Communications

The combo Communication Channel 0 port provides isolated RS-232 and RS-485 electrical compatibility (on separate pins). This port supports the same protocols as the MicroLogix 1200 and MicroLogix 1500:

- DF1 Full Duplex / DF1 Half Duplex Master & Slave / DF1 Radio Modem
- DH-485 (supported directly using the 1763-NC01 RS-485 cable on this port; or using the RS-232 port and existing cables, a 1761-NET-AIC and external power is required for networking)
- Modbus™ RTU Master and RTU Slave (supported directly using the 1763-NC01 RS-485 cable on this port, or using the RS-232 port and existing cables, a 1761-NET-AIC and external power is required for networking)
- ASCII

Communication Channel 1 with embedded RJ45 port supports EtherNet/IP for peer-to-peer messaging:

- 10/100 Mbps port with support for BOOTP, DHCP, & SNMP capability directly from the controller
- Automatically assign IP address through DHCP or BOOTP, or configure using RSLogix 500 programming software
- Monitor your IP address through the LCD screen (or use the write-on nameplate)
- Supports CIP
- Allows controllers to exchange data with other controllers through messaging (does not support scanning of I/O on Ethernet adapters)

Expansion

Use up to four 1762 I/O modules (also used to expand the MicroLogix 1200 controllers) to increase your I/O count, as well as provide flexibility of I/O for your application.

Modules include:
Inputs – 120V ac, 24V dc sink/source, analog, RTD, and thermocouple
Outputs – 120 to 240V ac, 24V dc sourcing, relay (including high current isolated), and analog

RSLogix™ 500 Programming Software

Supporting the Allen-Bradley SLC 500 and MicroLogix families of processors, RSLogix 500 was the first PLC programming software to offer unbeatable productivity with an industry-leading user interface. RSLogix 500 software offers:

- Flexible, easy-to-use editors
- Diagnostics and troubleshooting tools
- Powerful, time-saving features & functionality
- A world-class user interface designed for first time power users

Accessories

The MicroLogix 1100 accessories include:

- Memory module: 1763-MM1 - provides memory for program backup transport and can be useful to update programs in the field.
- RS-485 cable: 1763-NC01- used on Communication Channel 0 to provide daisy chain connection for DH-485 and Modbus RTU Master/Slave networks.

MicroLogix - A Family of Success

All members of the MicroLogix and SLC™ 500 families share a host of commonalities - from a common instruction set and industry- leading RSLogix 500™ programming software, to compatible network and HMI devices. These systems are designed to work seamlessly - within a single machine or across your entire factory.

All MicroLogix controllers are DIN-rail and panel mountable, as well as UL listed, C-UL Certified, and Class 1, Division 2 and CE compliant for conformity to necessary global standards. Your use of one controller within the family is an investment in the future, as your applications change and grow, allowing you to easily move from one level of control to another.

PRODUCT SPECIFICATIONS

MicroLogix 1100	1763-L16AWA	1763-L16BWA	1763-L16BBB	1763-L16DWD
Input Power	120/240V ac		24V dc	12V dc - 24V dc
Memory	non-volatile battery backed RAM			
User Program / User Data Space	4K / 4K			
Data Logging / Recipe Storage	Up to 128K bytes for data logging and up to 64K bytes for recipe (recipe memory subtracted from available data logging)			
Battery Back-up	Yes			
Back-up Memory Module	Yes			
Digital Inputs	Ten 120V ac	Six 24V dc, Four fast 24V dc		Six 12V dc / 24V dc, Four fast 12V dc / 24V dc
Analog Inputs	Embedded, two in local, with additional 1762 analog modules			
Digital Outputs	Six relay		Two relay, Two 24V dc FET, Two fast 24V dc FET	Six Relay
Serial Ports	One RS-232 / RS-485 Combo Port			
Serial Protocols	DF1 Full Duplex, DF1 Half Duplex Master/Slave, DF1 Radio Modem, DH-485, Modbus RTU Master/Slave, ASCII			
Ethernet Ports	One 10/100 port			
Ethernet Protocols	EtherNet/IP messaging only			
Trim Potentiometers	Two digital			
High-Speed Inputs (Pulse Catch)		Four @ 40kHz input (1ch)	Four @ 40 kHz input (1ch)	Four @ 40 kHz input (1ch)
Real Time Clock	Yes (embedded)			
PID	Yes (multiple loops only limited by program and stack memory)			
PWM /PTO			Two @ 40 kHz	
Dual Axis Servo control			Through embedded PTO	
Embedded LCD	Yes			
Floating Point Math	Yes			
Online Editing	Yes			
Operating Temperature	-20°C to +65°C (-4°F to +149°F)			
Storage Temperature	-40°C to +85°C (-40°F to +185°F)			

www.rockwellautomation.com

Power, Control and Information Solutions

Americas: Rockwell Automation, 1201 South Second Street, Milwaukee, WI 53204-2496 USA, Tel: (1) 414.382.2000, Fax: (1) 414.382.4444
Europe/Middle East/Africa: Rockwell Automation SA/NV, Vorstlaan/Boulevard du Souverain 36, 1170 Brussels, Belgium, Tel: (32) 2 663 0600, Fax: (32) 2 663 0640
Asia Pacific: Rockwell Automation, Level 14, Core F, Cyberport 3, 100 Cyberport Road, Hong Kong, Tel: (852) 2887 4788, Fax: (852) 2508 1846

Publication 1763-PP001B-EN-P – March 2007 — Supersedes Publication 1763-PP001A-EN-P – July 2005

Copyright ©2007 Rockwell Automation, Inc. All Rights Reserved. Printed in USA.

CompactLogix™ 5370 L2 Programmable Automation Controllers

1769L24ER-QB1B, -L24ER-QBFC1B, -L27ERM-QBFC1B

Features and Benefits

The CompactLogix 5370 L2 controllers deliver scalable, affordable control in a space-saving form factor. From small stand-alone equipment to higher performance applications, these controllers are ideal for assembly machines, hoisting systems, process skids, indexing tables, and packaging.

Machine builders and end users can take advantage of the cost-saving features of these controllers:

- Support for Integrated Motion on EtherNet/IP
- Support for Device Level Ring (DLR) network topologies
- Built-in energy storage eliminates the need for lithium batteries
- Support reuse of existing 1769 I/O
- Removable 1GB secure digital (SD) card improves data integrity
- Memory options up to 1MB
- Higher resolution analog capability supports thermocouple and RTD inputs
- Support for Kinematics eliminates the need for additional robot controllers and software
- Open socket capability allows support for Modbus TCP as well as devices such as printers, barcode readers and servers

Build a better machine with with CompactLogix 5370 L2 Programmable Automation Controllers.

Expanding on the scalability of the Logix family of controllers, the CompactLogix 5370 L2 programmable automation controllers (PAC) are designed to meet the growing need for a higher performance controller in a compact and affordable package. Offering a 40% reduction in required panel space and the same capabilities as the CompactLogix 5370 L3, the L2 controllers truly enable you to build a high performance, more cost-effective machine.

As part of the Integrated Architecture system, the CompactLogix 5370 L2 controllers use the same programming software, network protocol, and information capabilities as all Logix controllers, providing a common development environment for all control disciplines.

Integrated Motion on EtherNet/IP

The CompactLogix 5370 L2 controllers provides a strong motion solution for customers looking for performance and cost competitiveness.

- Supports up to 4 axes of integrated motion
- Together with the Kinetix 350, offers cost-effective, scalable motion solution

Network Capabilities

With dual Ethernet ports and an integrated Ethernet switch, these controllers now support Device Level Ring (DLR) network topologies, simplifying integration of components in your control system and reducing system cost:

- Provides resiliency from loss of one network connection
- Allows replacement of devices one at a time without stopping production
- Reduces the number of Ethernet switches in the control system

CompactLogix 5370 L2 Controller Product Specifications

	1769-L24ER-QB1B	1769-L24ER-QBFC1B	1769-L27ERM-QBFC1B
User memory	750 KB	750 KB	1 MB
Controller tasks	32	32	32
Programs per task	100	100	100
Integrated Motion	--	--	4 axis CIP motion position loop axis
Package Size	115mm wide x 118mm high x 105mm deep	140mm wide x 118mm high x 105mm deep	
Certifications	cULH (Class I Division 2), KCC / UL (UL 508), ULH (Class I & II, Division 2 and Class III, Divisions 1 & 2) / ATEX, CE, C-Tick, GOST-R, Marine		
Local Expansion Modules	4	4	4
Embedded I/O	16 digital inputs 16 digital outputs	16 digital inputs / 16 digital outputs, 4 universal analog input, 2 analog output, 4 channels HSC	
Local Expansion I/O Points	128	128	128
Communication Module Additions	DeviceNet with 1769-SDN or 3rd party		
Flash Memory Card	Industrially rated and certified Secure Digital (SD) memory card (1 and 2 GB options); all controllers shipped with 1 GB card		
Servo Drives (Position Loop CIP)	--	--	4
Ethernet I/O IP nodes	8	8	16
Virtual axes	100	100	100
Feedback only, torque, velocity, Vhz (max CIP motion drives)	--	--	16
Axes/ms	--	--	2
Kinematics support	--	--	yes
Software / Firmware	RSLogix 5000 V20 and RSLinx Classic V2.59 Firmware v20.1x or later		

CompactLogix, Integrated Architecture, Kinetix, RSLogix, Integrated Motion on EtherNet/IP are trademarks of Rockwell Automation, inc.
Trademarks not belonging to Rockwell Automation are property of their respective companies.

www.rockwellautomation.com

Power, Control and Information Solutions Headquarters

Americas: Rockwell Automation, 1201 South Second Street, Milwaukee, WI 53204-2496 USA, Tel: (1) 414.382.2000, Fax: (1) 414.382.4444
Europe/Middle East/Africa: Rockwell Automation NV, Pegasus Park, De Kleetlaan 12a, 1831 Diegem, Belgium, Tel: (32) 2 663 0600, Fax: (32) 2 663 0640
Asia Pacific: Rockwell Automation, Level 14, Core F, Cyberport 3, 100 Cyberport Road, Hong Kong, Tel: (852) 2887 4788, Fax: (852) 2508 1846

Publication 1769-PP011D-EN-E – July 2013
Supersedes Publication 1769-PP011C-EN-E – January 2013

Copyright © 2013 Rockwell Automation, Inc. All Rights Reserved. Printed in USA.

Micro820™ Programmable Logic Controller

Allen-Bradley

Bulletin 2080 Product Profile

Features and Benefits

- Features optimized for small standalone machines and remote automation projects
- EtherNet/IP™ for Connected Components Workbench™ programming, RTU applications and HMI connectivity
- Built-in Real Time Clock (RTC) with no battery required
- microSD™ slot for program transfer, datalog and recipe
- Selected models available with removable terminal blocks for easier wiring and installation
- 5 KHz PWM Output for controlling solenoids and valves

Micro800 Remote LCD Display

- *USB port for program download to controller*
- *IP65 for front panel mount*
- *Configurable start-up screen*

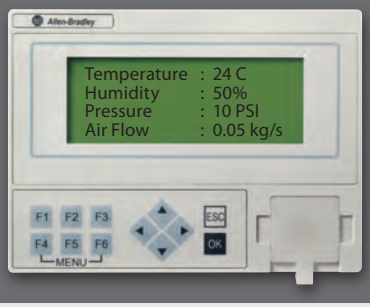

*Readings on LCD Display are for illustration purposes only, not actual readings.

The new Allen-Bradley Micro820 20pt controller is specifically designed for small standalone machines and remote automation projects with embedded Ethernet and Serial ports. It can function as a RTU (remote terminal unit) for remote machines with support for Modbus RTU and TCP. It has embedded support for 4 thermistor temperature inputs for use as a DDC (direct digital controller) for Building Management Systems.

The Micro820 supports an embedded microSD slot that can be used for storing large amounts of data that normally cannot fit into memory for applications that require datalog and recipe. All files are stored in CSV text format for easy viewing and editing. The microSD card is also used for backing up and restoring the program, which can be used for duplicating the program in several machines.

The Allen-Bradley Micro800 Remote LCD Display connects to the controller's embedded RS232 port and works as an essential accessory for the Micro820 controller. With 4 or 8 lines of ASCII text and a tactile keypad, it can be used as a simple HMI. Its system menu is available in multiple languages for direct viewing and editing of controller variables. Controller's Ethernet address can also be easily set from the menu. Supports front panel mounting as well as DIN rail mounting next to the controller.

Bulletin 2080

Catalog Number	Inputs			Outputs		
	120V AC	24V DC/ V AC	Analog 0-10V (shared with 24V DC)	Relay	24V DC SRC	Analog 0-10V
2080-LC20-20QWB(R)	-	12	4	7	-	1
2080-LC20-20QBB(R)	-	12	4	-	7	1
2080-LC20-20AWB(R)	8	4	4	7	-	1

Removable terminal blocks are available on modules with catalog numbers that end in R. Catalog numbers that do not end in R have fixed terminal blocks.

Micro820	20-pt QWB(R)	20-pt QBB(R)	20-pt AWB(R)
Base Unit			
Power Supply	Base Unit has embedded 24V DC Power Supply. Optional External 120/240V AC via Cat. No. 2080-PS120-240VAC		
Base Programming Port	Embedded Ethernet Port		
Base EtherNet/IP™ port	EtherNet/IP Class 3, Modbus TCP		
Base Serial Port	RS232/485 non-isolated, CIP Serial, Modbus RTU, ASCII		
Plug-in Slots	2		
10V Output for Thermistors	1 Output Reference (supports up to four 10k thermistors)		
PWM Output	5 KHz		
microSD Card Slot	1		
Supported microSD Card Formats	FAT32/16		
microSD Card Size, Max	32GB		
microSD Card Class Speed	Class 6 and 10 SDSC and SDHC		
I/O			
Digital I/O (In/Out)	12/7 (4 Inputs shared with Analog Inputs)		
Analog I/O Channels	4/1		
Progamming			
Software	Connected Components Workbench		
Program Steps (or instructions)	10Ksteps		
Data (bytes)	20Kbytes (up to 400bytes non-volatile)		
IEC 61131-3 Languages	Ladder Diagram, Function Block, Structured Text		
User Defined Function Blocks	Yes		
Motion Instructions	No PTO motion supported		
Floating Point Math	32-bit and 64-bit		
PID Loop Control	Yes		
Environments			
Certifications	c-UL-us CL1DIV2, CE, C-Tick, KC		
Temperature Range (Controller)	-20°…65°C		
Dimensions (HxWxD, mm)	90x100x80		

LCD Display	
Communications	
Embedded Serial Port	RS232 (connects to Controller's Embedded RS232 port)
Embedded USB Port	Controller programming port (USB to Serial pass-through)
Environmentals	
Temperature Range (LCD Display)	0°…50°C
Dimensions (HxWxD, mm)	97x130x36

Catalog Number	Plug-in Modules
2080-IQ4	4-pt Digital Input, 12/24VDC, Sink/Source, Type3
2080-OB4	4-pt Digital Output, 12/24VDC, Source
2080-OV4	4-pt Digital Output, 12/24VDC, Sink
2080-OW4I	4-pt Relay Output, Individually Isolated, 2A
2080-IQ4OB4	8-pt Combo: 4-pt Digital Input, 12/24VDC, Sink/Source, Type3, and 4-pt Digital Output, 12/24VDC, Source
2080-IQ4OV4	8-pt Combo: 4-pt Digital Input, 12/24VDC, Sink/Source, Type3, and 4-pt Digital Output, 12/24VDC, Sink
2080-IF2, 2080-IF4	2/4-ch Analog Input, 0-20 mA, 0-10V, non-isolated 12-bit
2080-OF2	2-ch Analog Output 0-20 mA, 0-10V, non-isolated 12-bit
2080-SERIALISOL	RS232/485 isolated serial port
2080-TRIMPOT6	6-ch Trimpot Analog Input
2080-RTD2	2-ch RTD, non-isolated, ±1.0 °C
2080-TC2	2-ch TC, non-isolated, ±1.0 °C
2080-MOT-HSC	High Speed Counter, 250kHz, Differential Line Receiver, 1 Digital Output
2080-DNET20	DeviceNet Scanner, 20 Nodes
Catalog Number	**Accessories**
2080-PS120-240VAC	External 120/240V AC power supply
2080-REMLCD	Remote 3.5 in. LCD Display, 24V DC Power, 4 or 8 lines ASCII text

Allen-Bradley, Connected Components Workbench and Micro820 are trademarks of Rockwell Automation, Inc.
Trademarks not belonging to Rockwell Automation are property of their respective companies.

www.rockwellautomation.com

Power, Control and Information Solutions Headquarters

Americas: Rockwell Automation, 1201 South Second Street, Milwaukee, WI 53204-2496 USA, Tel: (1) 414.382.2000, Fax: (1) 414.382.4444
Europe/Middle East/Africa: Rockwell Automation NV, Pegasus Park, De Kleetlaan 12a, 1831 Diegem, Belgium, Tel: (32) 2 663 0600, Fax: (32) 2 663 0640
Asia Pacific: Rockwell Automation, Level 14, Core F, Cyberport 3, 100 Cyberport Road, Hong Kong, Tel: (852) 2887 4788, Fax: (852) 2508 1846

Publication 2080-PP004A-EN-P – December 2013

Copyright ©2013 Rockwell Automation, Inc. All Rights Reserved. Printed in USA.

Micro850® Programmable Logic Controller

Allen-Bradley

Bulletin 2080 and 2085 Product Profile

Features and Benefits

- Equipped with same form factor, plug-in support, instruction/data size and motion capabilities as Micro830® 24-pt and 48-pt controllers
- EtherNet/IP™ for Connected Components Workbench™ programming, RTU applications and HMI connectivity. Client messaging for controlling drives and communications to other controllers using symbolic addressing.
- Designed for larger standalone machine applications that require higher density, higher precision analog and digital I/O as compared to Micro830 controller
- Expandable to a maximum of 132 digital I/O points on a 48-pt controller with Micro850 Expansion I/O modules
- Supports up to four Micro850 Expansion I/O modules
- Increased flexibility with removable terminal blocks
- Standard version of Connected Components Workbench software available as a free download

Micro850 Expansion I/O modules empower flexibility and greater I/O performance

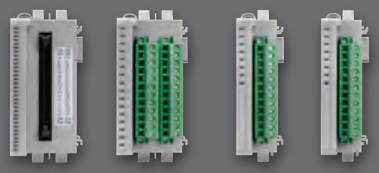

Machine builders and end users looking for flexibility, personalization, greater I/O performance and space-saving solutions, the expandable Micro850 controller is just the right solution. Designed as the leading controller of the Micro800® family, it also brings Micro800 PLC family to a higher level of flexibility and customization with its space-saving Plug-in, Expansion I/O modules and its removable terminal blocks. Furthermore, Micro850 controller is equipped with the same form factor, Plug-in support, instruction/data size and embedded motion capabilities as the Micro830 24-pt and 48-pt controller. The embedded motion capabilities supports up to 3 axes of motion with TouchProbe instruction that registers position of an axis, more precisely than using interrupts. Especially designed for larger standalone machine applications, Micro850 Expansion I/O module value adds to achieving higher density, higher precision analog and digital I/O as required. Micro850 48-pt controller has the capacity to support up to 4 Expansion I/O modules at a maximum of 132 I/O points.

Connected Components Workbench software is used among the entire Micro800 family of controllers, as well as other component products, such as PanelView Component HMIs and PowerFlex drives. Based on proven Rockwell Automation and Microsoft Visual Studio technology, the new software provides controller programming, device configuration and data sharing with the HMI editor for PanelView Component operator products. In addition, the software supports three standard IEC programming languages: ladder diagram, function block diagram and structured text. For enhanced security, controller password protection is supported for all Micro800 controllers.

Bulletin 2080 and 2085

Catalog Number	Inputs		Outputs			Motion Axis#	HSC*
	120/240V AC	12/24V^	Relay	24V Sink	24V Source		
2080-LC50-24QWB	-	14	10	-	-	-	4 HSC
2080-LC50-48QWB	-	28	20	-	-	-	6 HSC
2080-LC50-24QBB	-	14	-	-	10	2 PTO	4 HSC
2080-LC50-48QBB	-	28	-	-	20	3 PTO	6 HSC
2080-LC50-24QVB	-	14	-	10	-	2 PTO	4 HSC
2080-LC50-48QVB	-	28	-	20	-	3 PTO	6 HSC
2080-LC50-24AWB	14 (120V AC only)	-	10	-	-	-	-
2080-LC50-48AWB	28 (120V AC only)	-	20	-	-	-	-

Micro850	24-pt	48-pt
Base Unit		
Power Supply	Base Unit has embedded 24V DC Power Supply. Optional External 120/240V AC via Cat. No. 2080-PS120-240VAC	
Base Programming Port	Embedded USB 2.0 (non-isolated) Any standard USB printer cable will work	
Base Ethernet port	EtherNet/IP Class 3, Modbus TCP (10/100Mbps)	
Base Plug-in Slots	3	5
Base 100 KHz HSC* max	4 HSC	6 HSC
I/O		
Digital I/O (In/Out)	24 (14/10)	48 (28/20)
Analog I/O Channels	Via Plug-in Modules or with Expansion I/O Modules	
Expansion I/O Modules	up to 4 modules	
Maximum Digital I/O (via Plug-in & Expansion I/O modules)	132	
Programming		
Software	Connected Components Workbench	
Program Steps (or instructions)	10Ksteps	
Data (bytes)	20Kbytes	
IEC 61131-3 Languages	Ladder Diagram, Function Block, Structured Text	
User Defined Function Blocks	Yes	
Motion Instructions	Yes	
Floating Point Math	32-bit and 64-bit	
PID Loop Control	Yes	
Embedded Serial Port Protocols	RS232/485, Modbus RTU Master/Slave, ASCII, CIP	
Environmentals		
Certifications	c-UL-us CL1DIV2, CE, C-Tick, KC	
Temperature Range	-20°…65°C	
Dimensions (HxWxD, mm)	90 x 145 x 80	90 x 230 x 80

Catalog Number	Plug-in Modules
2080-IQ4	4-pt Digital Input, 12/24VDC, Sink/Source, Type3
2080-OB4	4-pt Digital Output, 12/24VDC, Source
2080-OV4	4-pt Digital Output, 12/24VDC, Sink
2080-OW4I	4-pt Relay Output, Individually Isolated, 2A
2080-IQ4OB4	8-pt Combo: 4-pt Digital Input, 12/24VDC, Sink/Source, Type3, and 4-pt Digital Output, 12/24VDC, Source
2080-IQ4OV4	8-pt Combo: 4-pt Digital Input, 12/24VDC, Sink/Source, Type3, and 4-pt Digital Output, 12/24VDC, Sink
2080-IF2, 2080-IF4	2/4-ch Analog Input, 0-20 mA, 0-10V, non-isolated 12-bit
2080-OF2	2-ch Analog Output 0-20 mA, 0-10V, non-isolated 12-bit
2080-SERIALISOL	RS232/485 isolated serial port
2080-TRIMPOT6	6-ch Trimpot Analog Input
2080-RTD2	2-ch RTD, non-isolated, ±1.0 °C
2080-TC2	2-ch TC, non-isolated, ±1.0 °C
2080-MEMBAK-RTC	Memory Backup and High Accuracy RTC
2080-MOT-HSC	High Speed Counter, 250 KHz, Differential Line Receiver, 1 Digital Output
2080-DNET20	DeviceNet Scanner, 20 Nodes
Catalog Number	**Expansion I/O Modules**
2085-IQ16, 2085-IQ32T	16/32-pt Digital Input, 12/24VDC, Sink/Source
2085-OV16	16-pt Digital Output, 12/24VDC, Sink
2085-OB16	16-pt Digital Output, 12/24VDC, Source
2085-OW8, 2085-OW16	8/16-pt Relay output, 2A
2085-IA8	8-pt 120 VAC input
2085-IM8	8-pt 240 VAC input
2085-OA8	8-pt 120/240 VAC output
2085-IF4, 2085-IF8	4/8-ch Analog Input, 0 ~ 20mA, -10V ~ +10V, isolated, 14-bit
2085-OF4	4-ch Analog Output, 0 ~ 20mA, -10V ~ +10V, isolated, 12-bit
2085-IRT4	4-ch RTD and TC , isolated, ±0.5 °C
2085-ECR	End Cap Terminator
Catalog Number	**Accessories**
2080-PS120-240VAC	External 120/240V AC power supply

^ 12/24V DC and 24V AC supported

Each Pulse Train Output Axis is shared with 2 HSC inputs so if max number of PTO is configured then number of HSC is zero

* 2-wire High Speed Counter shown, divide by 2 to get number of 4-wire HSCs

Allen-Bradley, Connected Components Workbench, Micro830 and Micro850 are trademarks of Rockwell Automation, Inc.
Trademarks not belonging to Rockwell Automation are property of their respective companies.

www.rockwellautomation.com

Power, Control and Information Solutions Headquarters

Americas: Rockwell Automation, 1201 South Second Street, Milwaukee, WI 53204-2496 USA, Tel: (1) 414.382.2000, Fax: (1) 414.382.4444
Europe/Middle East/Africa: Rockwell Automation NV, Pegasus Park, De Kleetlaan 12a, 1831 Diegem, Belgium, Tel: (32) 2 663 0600, Fax: (32) 2 663 0640
Asia Pacific: Rockwell Automation, Level 14, Core F, Cyberport 3, 100 Cyberport Road, Hong Kong, Tel: (852) 2887 4788, Fax: (852) 2508 1846

Publication 2080-PP003B-EN-P - November 2013
Supersedes Publication 2080-PP003A-EN-P – September 2012

Copyright ©2013 Rockwell Automation, Inc. All Rights Reserved. Printed in USA.

CONCEPT, TYPE 4 AND 12

INDUSTRY STANDARDS

Wall-mounting brackets required to maintain UL/CSA external mounting requirement.

CONCEPT solid single-door, door with window and flush-mount models

UL 508A Listed; Type 4, 12; File No. E61997 cUL Listed per CSA C22.2 No. 94; Type 4, 12; File No. E61997

NEMA/EEMAC Type 4, 12, 13
CSA, File No. 42186: Type 4, 12
VDE IP66
IEC 60529, IP66

CONCEPT two-door models

UL 508A Listed; Type 12; File No. E61997 cUL Listed per CSA C22.2 No. 94; Type 12; File No. E61997

NEMA/EEMAC Type 12
CSA, File No. 42186, Type 12
VDE IP 55
IEC 60529, IP55

APPLICATION

CONCEPT Enclosures are ideal for machine control applications. With streamlined styling, flush quarter-turn latches and an attractive, durable finish. Available in solid or window single-door and two-door landscape, flush-mount and sloped-top versions for application and mounting flexibility. Two-door landscape models provide full-width access and easy panel installation.

SPECIFICATIONS

- 14, 16 or 18 gauge steel (see table)
- Seams continuously welded and ground smooth
- Corner-formed doors
- Simple easy-to-remove and install hinge pins with built-in captivation clip
- High-torque threadless studs and fasteners on door
- Minimum-width body flange provides maximum door opening (210 degrees)
- External formed body flange
- Panel mounting studs fit optional CONCEPT panels and other accessories
- Mounting holes in back of body for optional external wall-mount brackets
- Hidden hinges
- Doors are interchangeable and easily removed by pulling clip-style hinge pins
- Seamless foam-in-place gasket
- Quarter-turn slotted latch(es)
- Door alignment device on doors wider than 30 in.
- Four hinges on 60-in.-high enclosures
- Grounding stud on body; bonding provision on door (except window-door models)
- Provisions for thermoplastic data pocket (right-hand hinged door on two-door models)
- Hardware kit with panel mounting nuts, panel grounding hardware and sealing washers
- Single-door enclosures have a three-point latch system on enclosures where A is equal to or greater than 42-in. with quarter-turn, slotted latch
- Window-door enclosures have a clear polycarbonate window flush with door surface
- Mounting frame on flush-mount enclosures extends completely around enclosure
- Two-door enclosures have a overlapping door design which provides full-width access
- Two door enclosures have a three-point latch system on right-hand hinged door furnished with flush slotted insert
- Illustrated instruction sheet

FINISH

Two standard finishes are available: ANSI 61 gray or RAL 7035 textured light-gray polyester powder paint inside and out.

ACCESSORIES

Door Stop Kit
Handles
Lock Inserts
CONCEPT Panels
Mounting-Bracket Kits
Also see the Popular Cooling Products and Accessories tables following the Standard Product tables

MODIFICATION AND CUSTOMIZATION

Hoffman excels at modifying and customizing products to your specifications. Contact your local Hoffman sales office or distributor for complete information.

BULLETIN: CW1

Standard Product **Single-Door Enclosures**

Catalog Number	AxBxC in./mm	Finish	Door Ga.	Body Ga.	CONCEPT Panel	Conductive CONCEPT Panel	Panel Size D x E in./mm	Mounting G x H in./mm	Latches qty.	Latches style	J in./mm
CSD12106	12.00 x 10.00 x 6.00 305 x 254 x 152	ANSI 61 Gray	16	18	CP1210	CP1210G	10.20 x 8.20 259 x 208	10.50 x 8.50 267 x 216	1	Quarter-turn	6.00 152
CSD12106LG	12.00 x 10.00 x 6.00 305 x 254 x 152	RAL 7035 Lt. GrayRAL 7035 Lt. Gray	16	18	CP1210	CP1210G	10.20 x 8.20 259 x 208	10.50 x 8.50 267 x 216	1	Quarter-turn	6.00 152
CSD12126	12.00 x 12.00 x 6.00 305 x 305 x 152	ANSI 61 Gray	16	18	CP1212	CP1212G	10.20 x 10.20 259 x 259	10.50 x 10.50 267 x 267	1	Quarter-turn	6.00 152
CSD12126LG	12.00 x 12.00 x 6.00 305 x 305 x 152	RAL 7035 Lt. Gray	16	18	CP1212	CP1212G	10.20 x 10.20 259 x 259	10.50 x 10.50 267 x 267	1	Quarter-turn	6.00 152
CSD12246	12.00 x 24.00 x 6.00 305 x 610 x 152	ANSI 61 Gray	16	18	CP2412	CP2412G	22.20 x 10.20 564 x 259	10.50 x 22.50 267 x 572	1	Quarter-turn	6.00 152
CSD12246LG	12.00 x 24.00 x 6.00 305 x 610 x 152	RAL 7035 Lt. Gray	16	18	CP2412	CP2412G	22.20 x 10.20 564 x 259	10.50 x 22.50 267 x 572	1	Quarter-turn	6.00 152
CSD16126	16.00 x 12.00 x 6.00 406 x 305 x 152	ANSI 61 Gray	16	18	CP1612	CP1612G	14.20 x 10.20 361 x 259	14.50 x 10.50 368 x 267	1	Quarter-turn	8.00 203
CSD16126LG	16.00 x 12.00 x 6.00 406 x 305 x 152	RAL 7035 Lt. Gray	16	18	CP1612	CP1612G	14.20 x 10.20 361 x 259	14.50 x 10.50 368 x 267	1	Quarter-turn	8.00 203
CSD16166	16.00 x 16.00 x 6.00 406 x 406 x 152	ANSI 61 Gray	16	18	CP1616	CP1616G	14.20 x 14.20 361 x 361	14.50 x 14.50 368 x 368	1	Quarter-turn	8.00 203
CSD16166LG	16.00 x 16.00 x 6.00 406 x 406 x 152	RAL 7035 Lt. Gray	16	18	CP1616	CP1616G	14.20 x 14.20 361 x 361	14.50 x 14.50 368 x 368	1	Quarter-turn	8.00 203
CSD16206	16.00 x 20.00 x 6.00 406 x 508 x 152	ANSI 61 Gray	16	18	CP2016	CP2016G	18.20 x 14.20 462 x 361	14.50 x 18.50 368 x 470	1	Quarter-turn	8.00 203
CSD16206LG	16.00 x 20.00 x 6.00 406 x 508 x 152	RAL 7035 Lt. Gray	16	18	CP2016	CP2016G	18.20 x 14.20 462 x 361	14.50 x 18.50 368 x 470	1	Quarter-turn	8.00 203
CSD20126	20.00 x 12.00 x 6.00 508 x 305 x 152	ANSI 61 Gray	16	18	CP2012	CP2012G	18.20 x 10.20 462 x 259	18.50 x 10.50 470 x 267	1	Quarter-turn	10.00 254
CSD20126LG	20.00 x 12.00 x 6.00 508 x 305 x 152	RAL 7035 Lt. Gray	16	18	CP2012	CP2012G	18.20 x 10.20 462 x 259	18.50 x 10.50 470 x 267	1	Quarter-turn	10.00 254
CSD20166	20.00 x 16.00 x 6.00 508 x 406 x 152	ANSI 61 Gray	16	18	CP2016	CP2016G	18.20 x 14.20 462 x 361	18.50 x 14.50 470 x 368	1	Quarter-turn	10.00 254
CSD20166LG	20.00 x 16.00 x 6.00 508 x 406 x 152	RAL 7035 Lt. Gray	16	18	CP2016	CP2016G	18.20 x 14.20 462 x 361	18.50 x 14.50 470 x 368	1	Quarter-turn	10.00 254
CSD20206	20.00 x 20.00 x 6.00 508 x 508 x 152	ANSI 61 Gray	16	18	CP2020	CP2020G	18.20 x 18.20 462 x 462	18.50 x 18.50 470 x 470	1	Quarter-turn	10.00 254
CSD20206LG	20.00 x 20.00 x 6.00 508 x 508 x 152	RAL 7035 Lt. Gray	16	18	CP2020	CP2020G	18.20 x 18.20 462 x 462	18.50 x 18.50 470 x 470	1	Quarter-turn	10.00 254
CSD20246	20.00 x 24.00 x 6.00 508 x 610 x 152	ANSI 61 Gray	16	18	CP2420	CP2420G	22.20 x 18.20 564 x 462	18.50 x 22.50 570 x 572	1	Quarter-turn	10.00 254
CSD20246LG	20.00 x 24.00 x 6.00 508 x 610 x 152	RAL 7035 Lt. Gray	16	18	CP2420	CP2420G	22.20 x 18.20 564 x 462	18.50 x 22.50 570 x 572	1	Quarter-turn	10.00 254
CSD24126	24.00 x 12.00 x 6.00 610 x 305 x 152	ANSI 61 Gray	16	18	CP2412	CP2412G	22.20 x 10.20 564 x 259	22.50 x 10.50 572 x 267	1	Quarter-turn	12.00 305
CSD24126LG	24.00 x 12.00 x 6.00 610 x 305 x 152	RAL 7035 Lt. Gray	16	18	CP2412	CP2412G	22.20 x 10.20 564 x 259	22.50 x 10.50 572 x 267	1	Quarter-turn	12.00 305
CSD24166	24.00 x 16.00 x 6.00 610 x 406 x 152	ANSI 61 Gray	16	18	CP2416	CP2416G	22.20 x 14.20 564 x 361	22.50 x 14.50 572 x 368	1	Quarter-turn	12.00 305
CSD24166LG	24.00 x 16.00 x 6.00 610 x 406 x 152	RAL 7035 Lt. Gray	16	18	CP2416	CP2416G	22.20 x 14.20 564 x 361	22.50 x 14.50 572 x 368	1	Quarter-turn	12.00 305
CSD24206	24.00 x 20.00 x 6.00 610 x 508 x 152	ANSI 61 Gray	16	18	CP2420	CP2420G	22.20 x 18.20 564 x 462	22.50 x 18.50 572 x 470	1	Quarter-turn	12.00 305
CSD24206LG	24.00 x 20.00 x 6.00 610 x 508 x 152	RAL 7035 Lt. Gray	16	18	CP2420	CP2420G	22.20 x 18.20 564 x 462	22.50 x 18.50 572 x 470	1	Quarter-turn	12.00 305
CSD24246	24.00 x 24.00 x 6.00 610 x 610 x 152	ANSI 61 Gray	14	16	CP2424	CP2424G	22.20 x 22.20 564 x 564	22.50 x 22.50 572 x 572	2	Quarter-turn	5.00 127
CSD24246LG	24.00 x 24.00 x 6.00 610 x 610 x 152	RAL 7035 Lt. Gray	14	16	CP2424	CP2424G	22.20 x 22.20 564 x 564	22.50 x 22.50 572 x 572	2	Quarter-turn	5.00 127
CSD30166	30.00 x 16.00 x 6.00 762 x 406 x 152	ANSI 61 Gray	14	16	CP3016	CP3016G	28.20 x 14.20 716 x 361	28.50 x 14.50 724 x 368	2	Quarter-turn	5.00 127
CSD30166LG	30.00 x 16.00 x 6.00 762 x 406 x 152	RAL 7035 Lt. Gray	14	16	CP3016	CP3016G	28.20 x 14.20 716 x 361	28.50 x 14.50 724 x 368	2	Quarter-turn	5.00 127
CSD30206	30.00 x 20.00 x 6.00 762 x 508 x 152	ANSI 61 Gray	14	16	CP3020	CP3020G	28.20 x 18.20 716 x 462	28.50 x 18.50 724 x 470	2	Quarter-turn	5.00 127
CSD30206LG	30.00 x 20.00 x 6.00 762 x 508 x 152	RAL 7035 Lt. Gray	14	16	CP3020	CP3020G	28.20 x 18.20 716 x 462	28.50 x 18.50 724 x 470	2	Quarter-turn	5.00 127
CSD30246	30.00 x 24.00 x 6.00 762 x 610 x 152	ANSI 61 Gray	14	16	CP3024	CP3024G	28.20 x 22.20 869 x 564	28.50 x 22.50 876 x 572	2	Quarter-turn	5.00 127
CSD30246LG	30.00 x 24.00 x 6.00 762 x 610 x 152	RAL 7035 Lt. Gray	14	16	CP3024	CP3024G	28.20 x 22.20 869 x 564	28.50 x 22.50 876 x 572	2	Quarter-turn	5.00 127
CSD36246	36.00 x 24.00 x 6.00 914 x 610 x 152	ANSI 61 Gray	14	16	CP3624	CP3624G	34.20 x 22.20 869 x 564	34.50 x 22.50 876 x 572	2	Quarter-turn	5.00 127
CSD36246LG	36.00 x 24.00 x 6.00 914 x 610 x 152	RAL 7035 Lt. Gray	14	16	CP3624	CP3624G	34.20 x 22.20 869 x 564	34.50 x 22.50 876 x 572	2	Quarter-turn	5.00 127
CSD36306	36.00 x 30.00 x 6.00 914 x 762 x 152	ANSI 61 Gray	14	14	CP3630	CP3630G	34.20 x 28.20 869 x 716	34.50 x 28.50 876 x 724	2	Quarter-turn	5.00 127
CSD36306LG	36.00 x 30.00 x 6.00 914 x 762 x 152	RAL 7035 Lt. Gray	14	14	CP3630	CP3630G	34.20 x 28.20 869 x 716	34.50 x 28.50 876 x 724	2	Quarter-turn	5.00 127

Catalog Number	AxBxC in./mm	Finish	Door Ga.	Body Ga.	CONCEPT Panel	Conductive CONCEPT Panel	Panel Size D x E in./mm	Mounting G x H in./mm	Latches qty.	Latches style	J in./mm
CSD12248	12.00 x 24.00 x 8.00 305 x 610 x 203	ANSI 61 Gray	16	18	CP2412	CP2412G	22.20 x 10.20 564 x 259	10.50 x 22.50 267 x 572	1	Quarter-turn	6.00 152
CSD12248LG	12.00 x 24.00 x 8.00 305 x 610 x 203	RAL 7035 Lt. Gray	16	18	CP2412	CP2412G	22.20 x 10.20 564 x 259	10.50 x 22.50 267 x 572	1	Quarter-turn	6.00 152
CSD16128	16.00 x 12.00 x 8.00 406 x 305 x 203	ANSI 61 Gray	16	18	CP1612	CP1612G	14.20 x 10.20 361 x 259	14.50 x 10.50 368 x 267	1	Quarter-turn	8.00 203
CSD16128LG	16.00 x 12.00 x 8.00 406 x 305 x 203	RAL 7035 Lt. Gray	16	18	CP1612	CP1612G	14.20 x 10.20 361 x 259	14.50 x 10.50 368 x 267	1	Quarter-turn	8.00 203
CSD16168	16.00 x 16.00 x 8.00 406 x 406 x 203	ANSI 61 Gray	16	18	CP1616	CP1616G	14.20 x 14.20 361 x 361	14.50 x 14.50 368 x 368	1	Quarter-turn	8.00 203
CSD16168LG	16.00 x 16.00 x 8.00 406 x 406 x 203	RAL 7035 Lt. Gray	16	18	CP1616	CP1616G	14.20 x 14.20 361 x 361	14.50 x 14.50 368 x 368	1	Quarter-turn	8.00 203
CSD16208	16.00 x 20.00 x 8.00 406 x 508 x 203	ANSI 61 Gray	16	18	CP2016	CP2016G	18.20 x 14.20 462 x 361	14.50 x 18.50 368 x 470	1	Quarter-turn	8.00 203
CSD16208LG	16.00 x 20.00 x 8.00 406 x 508 x 203	RAL 7035 Lt. Gray	16	18	CP2016	CP2016G	18.20 x 14.20 462 x 361	14.50 x 18.50 368 x 470	1	Quarter-turn	8.00 203
CSD20128	20.00 x 12.00 x 8.00 508 x 305 x 203	ANSI 61 Gray	16	18	CP2012	CP2012G	18.20 x 10.20 462 x 259	18.50 x 10.50 470 x 267	1	Quarter-turn	10.00 254
CSD20128LG	20.00 x 12.00 x 8.00 508 x 305 x 203	RAL 7035 Lt. Gray	16	18	CP2012	CP2012G	18.20 x 10.20 462 x 259	18.50 x 10.50 470 x 267	1	Quarter-turn	10.00 254
CSD20168	20.00 x 16.00 x 8.00 508 x 406 x 203	ANSI 61 Gray	16	18	CP2016	CP2016G	18.20 x 14.20 462 x 361	18.50 x 14.50 470 x 368	1	Quarter-turn	10.00 254
CSD20168LG	20.00 x 16.00 x 8.00 508 x 406 x 203	RAL 7035 Lt. Gray	16	18	CP2016	CP2016G	18.20 x 14.20 462 x 361	18.50 x 14.50 470 x 368	1	Quarter-turn	10.00 254
CSD20208	20.00 x 20.00 x 8.00 508 x 508 x 203	ANSI 61 Gray	16	18	CP2020	CP2020G	18.20 x 18.20 462 x 462	18.50 x 18.50 470 x 470	1	Quarter-turn	10.00 254
CSD20208LG	20.00 x 20.00 x 8.00 508 x 508 x 203	RAL 7035 Lt. Gray	16	18	CP2020	CP2020G	18.20 x 18.20 462 x 462	18.50 x 18.50 470 x 470	1	Quarter-turn	10.00 254
CSD20248	20.00 x 24.00 x 8.00 508 x 610 x 203	ANSI 61 Gray	16	18	CP2420	CP2420G	22.20 x 18.20 564 x 462	18.50 x 22.50 470 x 572	1	Quarter-turn	10.00 254
CSD20248LG	20.00 x 24.00 x 8.00 508 x 610 x 203	RAL 7035 Lt. Gray	16	18	CP2420	CP2420G	22.20 x 18.20 564 x 462	18.50 x 22.50 470 x 572	1	Quarter-turn	10.00 254
CSD24128	24.00 x 12.00 x 8.00 610 x 305 x 203	ANSI 61 Gray	16	18	CP2412	CP2412G	22.20 x 10.20 564 x 259	22.50 x 10.50 572 x 267	1	Quarter-turn	12.00 305
CSD24128LG	24.00 x 12.00 x 8.00 610 x 305 x 203	RAL 7035 Lt. Gray	16	18	CP2412	CP2412G	22.20 x 10.20 564 x 259	22.50 x 10.50 572 x 267	1	Quarter-turn	12.00 305
CSD24168	24.00 x 16.00 x 8.00 610 x 406 x 203	ANSI 61 Gray	16	18	CP2416	CP2416G	22.20 x 14.20 564 x 361	22.50 x 14.50 572 x 368	1	Quarter-turn	12.00 305
CSD24168LG	24.00 x 16.00 x 8.00 610 x 406 x 203	RAL 7035 Lt. Gray	16	18	CP2416	CP2416G	22.20 x 14.20 564 x 361	22.50 x 14.50 572 x 368	1	Quarter-turn	12.00 305
CSD24208	24.00 x 20.00 x 8.00 610 x 508 x 203	ANSI 61 Gray	16	18	CP2420	CP2420G	22.20 x 18.20 564 x 462	22.50 x 18.50 572 x 470	1	Quarter-turn	12.00 305
CSD24208LG	24.00 x 12.00 x 8.00 610 x 305 x 203	RAL 7035 Lt. Gray	16	18	CP2420	CP2420G	22.20 x 18.20 564 x 462	22.50 x 18.50 572 x 470	1	Quarter-turn	12.00 305
CSD24248	24.00 x 24.00 x 8.00 610 x 610 x 203	ANSI 61 Gray	14	16	CP2424	CP2424G	22.20 x 22.20 564 x 564	22.50 x 22.50 572 x 572	2	Quarter-turn	5.00 127
CSD24248LG	24.00 x 24.00 x 8.00 610 x 610 x 203	RAL 7035 Lt. Gray	14	16	CP2424	CP2424G	22.20 x 22.20 564 x 564	22.50 x 22.50 572 x 572	2	Quarter-turn	5.00 127
CSD24308	24.00 x 30.00 x 8.00 610 x 762 x 203	ANSI 61 Gray	14	16	CP3024	CP3024G	28.20 x 22.20 716 x 564	22.50 x 28.50 572 x 724	2	Quarter-turn	5.00 127
CSD24308LG	24.00 x 30.00 x 8.00 610 x 762 x 203	RAL 7035 Lt. Gray	14	16	CP3024	CP3024G	28.20 x 22.20 716 x 564	22.50 x 28.50 572 x 724	2	Quarter-turn	5.00 127
CSD30128	30.00 x 12.00 x 8.00 762 x 305 x 203	ANSI 61 Gray	14	16	CP3012	CP3012G	28.20 x 10.20 716 x 259	28.50 x 10.50 724 x 267	2	Quarter-turn	5.00 127
CSD30128LG	30.00 x 12.00 x 8.00 762 x 305 x 203	RAL 7035 Lt. Gray	14	16	CP3012	CP3012G	28.20 x 10.20 716 x 259	28.50 x 10.50 724 x 267	2	Quarter-turn	5.00 127
CSD30168	30.00 x 16.00 x 8.00 762 x 406 x 203	ANSI 61 Gray	14	16	CP3016	CP3016G	28.20 x 14.20 716 x 361	28.50 x 14.50 724 x 368	2	Quarter-turn	5.00 127
CSD30168LG	30.00 x 16.00 x 8.00 762 x 406 x 203	RAL 7035 Lt. Gray	14	16	CP3016	CP3016G	28.20 x 14.20 716 x 361	28.50 x 14.50 724 x 368	2	Quarter-turn	5.00 127
CSD30208	30.00 x 20.00 x 8.00 762 x 508 x 203	ANSI 61 Gray	14	16	CP3020	CP3020G	28.20 x 18.20 716 x 462	28.50 x 18.50 724 x 470	2	Quarter-turn	5.00 127
CSD30208LG	30.00 x 20.00 x 8.00 762 x 508 x 203	RAL 7035 Lt. Gray	14	16	CP3020	CP3020G	28.20 x 18.20 716 x 462	28.50 x 18.50 724 x 470	2	Quarter-turn	5.00 127
CSD30248	30.00 x 24.00 x 8.00 762 x 610 x 203	ANSI 61 Gray	14	14	CP3024	CP3024G	28.20 x 22.20 716 x 564	28.50 x 22.50 724 x 572	2	Quarter-turn	5.00 127
CSD30248LG	30.00 x 24.00 x 8.00 762 x 610 x 203	RAL 7035 Lt. Gray	14	14	CP3024	CP3024G	28.20 x 22.20 716 x 564	28.50 x 22.50 724 x 572	2	Quarter-turn	5.00 127
CSD30308	30.00 x 30.00 x 8.00 762 x 762 x 203	ANSI 61 Gray	14	14	CP3030	CP3030G	28.20 x 28.20 716 x 716	28.50 x 28.50 724 x 724	2	Quarter-turn	5.00 127
CSD30308LG	30.00 x 30.00 x 8.00 762 x 762 x 203	RAL 7035 Lt. Gray	14	14	CP3030	CP3030G	28.20 x 28.20 716 x 716	28.50 x 28.50 724 x 724	2	Quarter-turn	5.00 127
CSD30368	30.00 x 36.00 x 8.00 762 x 914 x 203	ANSI 61 Gray	14	14	CP3630	CP3630G	34.20 x 28.20 869 x 716	28.50 x 34.50 724 x 876	2	Quarter-turn	5.00 127
CSD30368LG	30.00 x 36.00 x 8.00 762 x 914 x 203	RAL 7035 Lt. Gray	14	14	CP3630	CP3630G	34.20 x 28.20 869 x 716	28.50 x 34.50 724 x 876	2	Quarter-turn	5.00 127
CSD36248	36.00 x 24.00 x 8.00 914 x 610 x 203	ANSI 61 Gray	14	16	CP3624	CP3624G	34.20 x 22.20 869 x 564	34.50 x 22.50 876 x 572	2	Quarter-turn	5.00 127

Catalog Number	AxBxC in./mm	Finish	Door Ga.	Body Ga.	CONCEPT Panel	Conductive CONCEPT Panel	Panel Size D x E in./mm	Mounting G x H in./mm	Latches qty.	Latches style	J in./mm
CSD36248LG	36.00 x 24.00 x 8.00 914 x 610 x 203	RAL 7035 Lt. Gray	14	16	CP3624	CP3624G	34.20 x 22.20 869 x 564	34.50 x 22.50 876 x 572	2	Quarter-turn	5.00 127
CSD36308	36.00 x 30.00 x 8.00 914 x 762 x 203	ANSI 61 Gray	14	14	CP3630	CP3630G	34.20 x 28.20 869 x 716	34.50 x 28.50 876 x 724	2	Quarter-turn	5.00 127
CSD36308LG	36.00 x 30.00 x 8.00 914 x 762 x 203	RAL 7035 Lt. Gray	14	14	CP3630	CP3630G	34.20 x 28.20 869 x 716	34.50 x 28.50 876 x 724	2	Quarter-turn	5.00 127
CSD36368	36.00 x 36.00 x 8.00 914 x 914 x 203	ANSI 61 Gray	14	14	CP3636	CP3636G	34.20 x 34.20 869 x 869	34.50 x 34.50 876 x 876	2	Quarter-turn	5.00 127
CSD36368LG	36.00 x 36.00 x 8.00 914 x 914 x 203	RAL 7035 Lt. Gray	14	14	CP3636	CP3636G	34.20 x 34.20 869 x 869	34.50 x 34.50 876 x 876	2	Quarter-turn	5.00 127
CSD42248	42.00 x 24.00 x 8.00 1067 x 610 x 203	ANSI 61 Gray	14	14	CP2442	CP2442G	22.20 x 40.20 564 x 1021	40.50 x 22.50 1029 x 572	1	3-point	21.00 533
CSD42248LG	42.00 x 24.00 x 8.00 1067 x 610 x 203	RAL 7035 Lt. Gray	14	14	CP2442	CP2442G	22.20 x 40.20 564 x 1021	40.50 x 22.50 1029 x 572	1	3-point	21.00 533
CSD42308	42.00 x 30.00 x 8.00 1067 x 762 x 203	ANSI 61 Gray	14	14	CP4230	CP4230G	40.20 x 28.20 1021 x 716	40.50 x 28.50 1029 x 716	1	3-point	21.00 533
CSD42308LG	42.00 x 30.00 x 8.00 1067 x 762 x 203	RAL 7035 Lt. Gray	14	14	CP4230	CP4230G	40.20 x 28.20 1021 x 716	40.50 x 28.50 1029 x 716	1	3-point	21.00 533
CSD42368	42.00 x 36.00 x 8.00 1067 x 914 x 203	ANSI 61 Gray	14	14	CP4236	CP4236G	40.20 x 34.20 1021 x 869	40.50 x 34.50 1029 x 876	1	3-point	21.00 533
CSD42368LG	42.00 x 36.00 x 8.00 1067 x 914 x 203	RAL 7035 Lt. Gray	14	14	CP4236	CP4236G	40.20 x 34.20 1021 x 869	40.50 x 34.50 1029 x 876	1	3-point	21.00 533
CSD48248	48.00 x 24.00 x 8.00 1219 x 610 x 203	ANSI 61 Gray	14	14	CP4824	CP4824G	46.20 x 22.20 1174 x 564	46.50 x 22.50 1181 x 572	1	3-point	24.00 610
CSD48248LG	48.00 x 24.00 x 8.00 1219 x 610 x 203	RAL 7035 Lt. Gray	14	14	CP4824	CP4824G	46.20 x 22.20 1174 x 564	46.50 x 22.50 1181 x 572	1	3-point	24.00 610
CSD48308	48.00 x 30.00 x 8.00 1219 x 762 x 203	ANSI 61 Gray	14	14	CP3048	CP3048G	28.20 x 46.20 716 x 1174	46.50 x 28.50 1181 x 724	1	3-point	24.00 610
CSD48308LG	48.00 x 30.00 x 8.00 1219 x 762 x 203	RAL 7035 Lt. Gray	14	14	CP3048	CP3048G	28.20 x 46.20 716 x 1174	46.50 x 28.50 1181 x 724	1	3-point	24.00 610
CSD48368	48.00 x 36.00 x 8.00 1219 x 914 x 203	ANSI 61 Gray	14	14	CP4836	CP4836G	46.20 x 34.20 1174 x 876	46.50 x 34.50 1181 x 876	1	3-point	24.00 610
CSD48368LG	48.00 x 36.00 x 8.00 1219 x 914 x 203	RAL 7035 Lt. Gray	14	14	CP4836	CP4836G	46.20 x 34.20 1174 x 876	46.50 x 34.50 1181 x 876	1	3-point	24.00 610
CSD60368	60.00 x 36.00 x 8.00 1524 x 914 x 203	ANSI 61 Gray	14	14	CP6036	CP6036G	58.20 x 34.20 1478 x 869	58.50 x 34.50 1486 x 876	1	3-point	30.00 762
CSD60368LG	60.00 x 36.00 x 8.00 1524 x 914 x 203	RAL 7035 Lt. Gray	14	14	CP6036	CP6036G	58.20 x 34.20 1478 x 869	58.50 x 34.50 1486 x 876	1	3-point	30.00 762
CSD161210	16.00 x 12.00 x 10.00 406 x 305 x 254	ANSI 61 Gray	16	18	CP1612	CP1612G	14.20 x 10.20 361 x 259	14.50 x 10.50 368 x 267	1	Quarter-turn	8.00 203
CSD161210LG	16.00 x 12.00 x 10.00 406 x 305 x 254	ANSI 61 Gray	16	18	CP1612	CP1612G	14.20 x 10.20 361 x 259	14.50 x 10.50 368 x 267	1	Quarter-turn	8.00 203
CSD161610	16.00 x 16.00 x 10.00 406 x 406 x 254	RAL 7035 Lt. Gray	16	18	CP1616	CP1616G	14.20 x 14.20 361 x 361	14.50 x 14.50 368 x 368	1	Quarter-turn	8.00 203
CSD161610LG	16.00 x 16.00 x 10.00 406 x 406 x 254	RAL 7035 Lt. Gray	16	18	CP1616	CP1616G	14.20 x 14.20 361 x 361	14.50 x 14.50 368 x 368	1	Quarter-turn	8.00 203
CSD162010	16.00 x 20.00 x 10.00 406 x 508 x 254	ANSI 61 Gray	16	18	CP2016	CP2016G	18.20 x 14.20 462 x 361	14.50 x 18.50 368 x 470	1	Quarter-turn	8.00 203
CSD162010LG	16.00 x 20.00 x 10.00 406 x 508 x 254	RAL 7035 Lt. Gray	16	18	CP2016	CP2016G	18.20 x 14.20 462 x 361	14.50 x 18.50 368 x 470	1	Quarter-turn	8.00 203
CSD201610	20.00 x 16.00 x 10.00 508 x 406 x 254	ANSI 61 Gray	16	18	CP2016	CP2016G	18.20 x 14.20 462 x 361	18.50 x 14.50 470 x 368	1	Quarter-turn	10.00 254
CSD201610LG	20.00 x 16.00 x 10.00 508 x 406 x 254	RAL 7035 Lt. Gray	16	18	CP2016	CP2016G	18.20 x 14.20 462 x 361	18.50 x 14.50 470 x 368	1	Quarter-turn	10.00 254
CSD202010	20.00 x 20.00 x 10.00 508 x 508 x 254	ANSI 61 Gray	16	18	CP2020	CP2020G	18.20 x 18.20 462 x 462	18.50 x 18.50 470 x 470	1	Quarter-turn	10.00 254
CSD202010LG	20.00 x 20.00 x 10.00 508 x 508 x 254	RAL 7035 Lt. Gray	16	18	CP2020	CP2020G	18.20 x 18.20 462 x 462	18.50 x 18.50 470 x 470	1	Quarter-turn	10.00 254
CSD202410	20.00 x 24.00 x 10.00 508 x 610 x 254	ANSI 61 Gray	16	18	CP2420	CP2420G	22.20 x 18.20 564 x 462	18.50 x 22.50 470 x 572	1	Quarter-turn	10.00 254
CSD202410LG	20.00 x 24.00 x 10.00 508 x 610 x 254	RAL 7035 Lt. Gray	16	18	CP2420	CP2420G	22.20 x 18.20 564 x 462	18.50 x 22.50 470 x 572	1	Quarter-turn	10.00 254
CSD241210	24.00 x 12.00 x 10.00 610 x 305 x 254	ANSI 61 Gray	16	18	CP2412	CP2412G	22.20 x 10.20 564 x 259	22.50 x 10.50 572 x 267	1	Quarter-turn	12.00 305
CSD241210LG	24.00 x 12.00 x 10.00 610 x 305 x 254	RAL 7035 Lt. Gray	16	18	CP2412	CP2412G	22.20 x 10.20 564 x 259	22.50 x 10.50 572 x 267	1	Quarter-turn	12.00 305
CSD241610	24.00 x 16.00 x 10.00 610 x 406 x 254	ANSI 61 Gray	16	18	CP2416	CP2416G	22.20 x 14.20 564 x 361	22.50 x 14.50 572 x 368	1	Quarter-turn	12.00 305
CSD241610LG	24.00 x 16.00 x 10.00 610 x 406 x 254	RAL 7035 Lt. Gray	16	18	CP2416	CP2416G	22.20 x 14.20 564 x 361	22.50 x 14.50 572 x 368	1	Quarter-turn	12.00 305
CSD242010	24.00 x 20.00 x 10.00 610 x 508 x 254	ANSI 61 Gray	16	18	CP2420	CP2420G	22.20 x 18.20 564 x 462	22.50 x 18.50 572 x 470	1	Quarter-turn	12.00 305
CSD242010LG	24.00 x 20.00 x 10.00 610 x 508 x 254	RAL 7035 Lt. Gray	16	18	CP2420	CP2420G	22.20 x 18.20 564 x 462	22.50 x 18.50 572 x 470	1	Quarter-turn	12.00 305
CSD242410	24.00 x 24.00 x 10.00 610 x 610 x 254	ANSI 61 Gray	14	16	CP2424	CP2424G	22.20 x 22.20 564 x 564	22.50 x 22.50 572 x 572	2	Quarter-turn	5.00 127
CSD242410LG	24.00 x 24.00 x 10.00 610 x 610 x 254	RAL 7035 Lt. Gray	14	16	CP2424	CP2424G	22.20 x 22.20 564 x 564	22.50 x 22.50 572 x 572	2	Quarter-turn	5.00 127

Catalog Number	AxBxC in./mm	Finish	Door Ga.	Body Ga.	CONCEPT Panel	Conductive CONCEPT Panel	Panel Size D x E in./mm	Mounting G x H in./mm	Latches qty.	Latches style	J in./mm
CSD243010	24.00 x 30.00 x 10.00 610 x 762 x 254	ANSI 61 Gray	14	16	CP3024	CP3024G	28.20 x 22.20 716 x 564	22.50 x 28.50 572 x 724	2	Quarter-turn	5.00 127
CSD243010LG	24.00 x 30.00 x 10.00 610 x 762 x 254	RAL 7035 Lt. Gray	14	16	CP3024	CP3024G	28.20 x 22.20 716 x 564	22.50 x 28.50 572 x 724	2	Quarter-turn	5.00 127
CSD302010	30.00 x 20.00 x 10.00 762 x 508 x 254	ANSI 61 Gray	14	16	CP3020	CP3020G	28.20 x 18.20 716 x 462	28.50 x 18.50 724 x 470	2	Quarter-turn	5.00 127
CSD302010LG	30.00 x 20.00 x 10.00 762 x 508 x 254	RAL 7035 Lt. Gray	14	16	CP3020	CP3020G	28.20 x 18.20 716 x 462	28.50 x 18.50 724 x 470	2	Quarter-turn	5.00 127
CSD302410	30.00 x 24.00 x 10.00 762 x 610 x 254	ANSI 61 Gray	14	16	CP3024	CP3024G	28.20 x 22.20 716 x 564	28.50 x 22.50 724 x 572	2	Quarter-turn	5.00 127
CSD302410LG	30.00 x 24.00 x 10.00 762 x 610 x 254	RAL 7035 Lt. Gray	14	16	CP3024	CP3024G	28.20 x 22.20 716 x 564	28.50 x 22.50 724 x 572	2	Quarter-turn	5.00 127
CSD303010	30.00 x 30.00 x 10.00 762 x 762 x 254	ANSI 61 Gray	14	14	CP3030	CP3030G	28.20 x 28.20 716 x 716	28.50 x 28.50 724 x 724	2	Quarter-turn	5.00 127
CSD303010LG	30.00 x 30.00 x 10.00 762 x 762 x 254	RAL 7035 Lt. Gray	14	14	CP3030	CP3030G	28.20 x 28.20 716 x 716	28.50 x 28.50 724 x 724	2	Quarter-turn	5.00 127
CSD362410	36.00 x 24.00 x 10.00 914 x 610 x 254	ANSI 61 Gray	14	16	CP3624	CP3624G	34.20 x 22.20 869 x 564	34.50 x 22.50 876 x 572	2	Quarter-turn	5.00 127
CSD362410LG	36.00 x 24.00 x 10.00 914 x 610 x 254	RAL 7035 Lt. Gray	14	16	CP3624	CP3624G	34.20 x 22.20 869 x 564	34.50 x 22.50 876 x 572	2	Quarter-turn	5.00 127
CSD363010	36.00 x 30.00 x 10.00 914 x 762 x 254	ANSI 61 Gray	14	14	CP3630	CP3630G	34.20 x 28.20 869 x 716	34.50 x 28.50 876 x 724	2	Quarter-turn	5.00 127
CSD363010LG	36.00 x 30.00 x 10.00 914 x 762 x 254	RAL 7035 Lt. Gray	14	14	CP3630	CP3630G	34.20 x 28.20 869 x 716	34.50 x 28.50 876 x 724	2	Quarter-turn	5.00 127
CSD363610	36.00 x 36.00 x 10.00 914 x 914 x 254	ANSI 61 Gray	14	14	CP3636	CP3636G	34.20 x 34.20 869 x 869	34.50 x 34.50 876 x 876	2	Quarter-turn	5.00 127
CSD363610LG	36.00 x 36.00 x 10.00 914 x 914 x 254	RAL 7035 Lt. Gray	14	14	CP3636	CP3636G	34.20 x 34.20 869 x 869	34.50 x 34.50 876 x 876	2	Quarter-turn	5.00 127
CSD422410	42.00 x 24.00 x 10.00 1067 x 610 x 254	ANSI 61 Gray	14	14	CP2442	CP2442G	22.20 x 40.20 564 x 1021	40.50 x 22.50 1029 x 572	1	3-point	21.00 533
CSD422410LG	42.00 x 24.00 x 10.00 1067 x 610 x 254	RAL 7035 Lt. Gray	14	14	CP2442	CP2442G	22.20 x 40.20 564 x 1021	40.50 x 22.50 1029 x 572	1	3-point	21.00 533
CSD423010	42.00 x 30.00 x 10.00 1067 x 762 x 254	ANSI 61 Gray	14	14	CP4230	CP4230G	40.20 x 28.20 1021 x 716	40.50 x 28.50 1029 x 724	1	3-point	21.00 533
CSD423010LG	42.00 x 30.00 x 10.00 1067 x 762 x 254	RAL 7035 Lt. Gray	14	14	CP4230	CP4230G	40.20 x 28.20 1021 x 716	40.50 x 28.50 1029 x 724	1	3-point	21.00 533
CSD423610	42.00 x 36.00 x 10.00 1067 x 914 x 254	ANSI 61 Gray	14	14	CP4236	CP4236G	40.20 x 34.20 1021 x 869	40.50 x 34.50 1029 x 876	1	3-point	21.00 533
CSD423610LG	42.00 x 36.00 x 10.00 1067 x 914 x 254	RAL 7035 Lt. Gray	14	14	CP4236	CP4236G	40.20 x 34.20 1021 x 869	40.50 x 34.50 1029 x 876	1	3-point	21.00 533
CSD482410	48.00 x 24.00 x 10.00 1219 x 610 x 254	ANSI 61 Gray	14	14	CP4824	CP4824G	46.20 x 22.20 1173 x 564	46.50 x 22.50 1181 x 572	1	3-point	24.00 610
CSD482410LG	48.00 x 24.00 x 10.00 1219 x 610 x 254	RAL 7035 Lt. Gray	14	14	CP4824	CP4824G	46.20 x 22.20 1173 x 564	46.50 x 22.50 1181 x 572	1	3-point	24.00 610
CSD483010	48.00 x 30.00 x 10.00 1219 x 762 x 254	ANSI 61 Gray	14	14	CP3048	CP3048G	28.20 x 46.20 716 x 1174	46.50 x 28.50 1181 x 28.50	1	3-point	24.00 610
CSD483010LG	48.00 x 30.00 x 10.00 1219 x 762 x 254	RAL 7035 Lt. Gray	14	14	CP3048	CP3048G	28.20 x 46.20 716 x 1174	46.50 x 28.50 1181 x 28.50	1	3-point	24.00 610
CSD483610	48.00 x 36.00 x 10.00 1219 x 914 x 254	ANSI 61 Gray	14	14	CP4836	CP4836G	46.20 x 34.20 1173 x 869	46.50 x 34.50 1181 x 876	1	3-point	24.00 610
CSD483610LG	48.00 x 36.00 x 10.00 1219 x 914 x 254	RAL 7035 Lt. Gray	14	14	CP4836	CP4836G	46.20 x 34.20 1173 x 869	46.50 x 34.50 1181 x 876	1	3-point	24.00 610
CSD603610	60.00 x 36.00 x 10.00 1524 x 914 x 254	ANSI 61 Gray	14	14	CP6036	CP6036G	58.20 x 34.20 1478 x 869	58.50 x 34.50 1486 x 876	1	3-point	30.00 762
CSD603610LG	60.00 x 36.00 x 10.00 1524 x 914 x 254	RAL 7035 Lt. Gray	14	14	CP6036	CP6036G	58.20 x 34.20 1478 x 869	58.50 x 34.50 1486 x 876	1	3-point	30.00 762
CSD201612	20.00 x 16.00 x 12.00 508 x 406 x 305	ANSI 61 Gray	16	18	CP2016	CP2016G	18.20 x 14.20 462 x 361	18.50 x 14.50 470 x 1029	1	Quarter-turn	10.00 254
CSD201612LG	20.00 x 16.00 x 12.00 508 x 406 x 305	RAL 7035 Lt. Gray	16	18	CP2016	CP2016G	18.20 x 14.20 462 x 361	18.50 x 14.50 470 x 1029	1	Quarter-turn	10.00 254
CSD202012	20.00 x 20.00 x 12.00 508 x 508 x 305	ANSI 61 Gray	16	16	CP2020	CP2020G	18.20 x 18.20 462 x 462	18.50 x 18.50 470 x 470	1	Quarter-turn	10.00 254
CSD202012LG	20.00 x 20.00 x 12.00 508 x 508 x 305	RAL 7035 Lt. Gray	16	16	CP2020	CP2020G	18.20 x 18.20 462 x 462	18.50 x 18.50 470 x 470	1	Quarter-turn	10.00 254
CSD242012	24.00 x 20.00 x 12.00 610 x 508 x 305	ANSI 61 Gray	16	16	CP2420	CP2420G	22.20 x 18.20 564 x 462	22.50 x 18.50 572 x 470	1	Quarter-turn	12.00 305
CSD242012LG	24.00 x 20.00 x 12.00 610 x 508 x 305	RAL 7035 Lt. Gray	16	16	CP2420	CP2420G	22.20 x 18.20 564 x 462	22.50 x 18.50 572 x 470	1	Quarter-turn	12.00 305
CSD242412	24.00 x 24.00 x 12.00 610 x 610 x 305	ANSI 61 Gray	14	16	CP2424	CP2424G	22.20 x 22.20 564 x 564	22.50 x 22.50 572 x 572	2	Quarter-turn	5.00 127
CSD242412LG	24.00 x 24.00 x 12.00 610 x 610 x 305	RAL 7035 Lt. Gray	14	16	CP2424	CP2424G	22.20 x 22.20 564 x 564	22.50 x 22.50 572 x 572	2	Quarter-turn	5.00 127
CSD243012	24.00 x 30.00 x 12.00 610 x 762 x 305	ANSI 61 Gray	14	16	CP3024	CP3024G	28.20 x 22.20 716 x 564	22.50 x 28.50 572 x 724	2	Quarter-turn	5.00 127
CSD243012LG	24.00 x 30.00 x 12.00 610 x 762 x 305	RAL 7035 Lt. Gray	14	16	CP3024	CP3024G	28.20 x 22.20 716 x 564	22.50 x 28.50 572 x 724	2	Quarter-turn	5.00 127
CSD302412	30.00 x 24.00 x 12.00 762 x 610 x 305	ANSI 61 Gray	14	16	CP3024	CP3024G	28.20 x 22.20 716 x 564	28.50 x 22.50 724 x 572	2	Quarter-turn	5.00 127

Catalog Number	AxBxC in./mm	Finish	Door Ga.	Body Ga.	CONCEPT Panel	Conductive CONCEPT Panel	Panel Size D x E in./mm	Mounting G x H in./mm	Latches qty.	Latches style	J in./mm
CSD302412LG	30.00 x 24.00 x 12.00 762 x 610 x 305	RAL 7035 Lt. Gray	14	16	CP3024	CP3024G	28.20 x 22.20 716 x 564	28.50 x 22.50 724 x 572	2	Quarter-turn	5.00 127
CSD303012	30.00 x 30.00 x 12.00 762 x 762 x 305	ANSI 61 Gray	14	14	CP3030	CP3030G	28.20 x 28.20 716 x 716	28.50 x 28.50 724 x 724	2	Quarter-turn	5.00 127
CSD303012LG	30.00 x 30.00 x 12.00 762 x 762 x 305	RAL 7035 Lt. Gray	14	14	CP3030	CP3030G	28.20 x 28.20 716 x 716	28.50 x 28.50 724 x 724	2	Quarter-turn	5.00 127
CSD362412	36.00 x 24.00 x 12.00 914 x 610 x 305	ANSI 61 Gray	14	16	CP3624	CP3624G	34.20 x 22.20 869 x 564	34.50 x 22.50 876 x 572	2	Quarter-turn	5.00 127
CSD362412LG	36.00 x 24.00 x 12.00 914 x 610 x 305	RAL 7035 Lt. Gray	14	16	CP3624	CP3624G	34.20 x 22.20 869 x 564	34.50 x 22.50 876 x 572	2	Quarter-turn	5.00 127
CSD363012	36.00 x 30.00 x 12.00 914 x 762 x 305	ANSI 61 Gray	14	14	CP3630	CP3630G	34.20 x 28.20 869 x 716	34.50 x 28.50 876 x 724	2	Quarter-turn	5.00 127
CSD363012LG	36.00 x 30.00 x 12.00 914 x 762 x 305	RAL 7035 Lt. Gray	14	14	CP3630	CP3630G	34.20 x 28.20 869 x 716	34.50 x 28.50 876 x 724	2	Quarter-turn	5.00 127
CSD363612	36.00 x 36.00 x 12.00 914 x 914 x 305	ANSI 61 Gray	14	14	CP3636	CP3636G	34.20 x 34.20 869 x 869	34.50 x 34.50 876 x 876	2	Quarter-turn	5.00 127
CSD363612LG	36.00 x 36.00 x 12.00 914 x 914 x 305	RAL 7035 Lt. Gray	14	14	CP3636	CP3636G	34.20 x 34.20 869 x 869	34.50 x 34.50 876 x 876	2	Quarter-turn	5.00 127
CSD423012	42.00 x 30.00 x 12.00 1067 x 762 x 305	ANSI 61 Gray	14	14	CP4230	CP4230G	40.20 x 28.20 1021 x 716	40.50 x 28.50 1029 x 724	1	3-point	21.00 533
CSD423012LG	42.00 x 30.00 x 12.00 1067 x 762 x 305	RAL 7035 Lt. Gray	14	14	CP4230	CP4230G	40.20 x 28.20 1021 x 716	40.50 x 28.50 1029 x 724	1	3-point	21.00 533
CSD423612	42.00 x 36.00 x 12.00 1067 x 914 x 305	ANSI 61 Gray	14	14	CP4236	CP4236G	40.20 x 34.20 1021 x 869	40.50 x 34.50 1029 x 876	1	3-point	21.00 533
CSD423612LG	42.00 x 36.00 x 12.00 1067 x 914 x 305	RAL 7035 Lt. Gray	14	14	CP4236	CP4236G	40.20 x 34.20 1021 x 869	40.50 x 34.50 1029 x 876	1	3-point	21.00 533
CSD482412	48.00 x 24.00 x 12.00 1219 x 610 x 305	ANSI 61 Gray	14	14	CP4824	CP4824G	46.20 x 22.20 1173 x 564	46.50 x 22.50 1181 x 572	1	3-point	24.00 610
CSD482412LG	48.00 x 24.00 x 12.00 1219 x 610 x 305	RAL 7035 Lt. Gray	14	14	CP4824	CP4824G	46.20 x 22.20 1173 x 564	46.50 x 22.50 1181 x 572	1	3-point	24.00 610
CSD483612	48.00 x 36.00 x 12.00 1219 x 914 x 305	ANSI 61 Gray	14	14	CP4836	CP4836G	46.20 x 34.20 1173 x 869	46.50 x 34.50 1181 x 876	1	3-point	24.00 610
CSD483612LG	48.00 x 36.00 x 12.00 1219 x 914 x 305	RAL 7035 Lt. Gray	14	14	CP4836	CP4836G	46.20 x 34.20 1173 x 869	46.50 x 34.50 1181 x 876	1	3-point	24.00 610
CSD603612	60.00 x 36.00 x 12.00 1524 x 914 x 305	ANSI 61 Gray	14	14	CP6036	CP6036G	58.20 x 34.20 1478 x 869	58.50 x 34.50 1486 x 876	1	3-point	30.00 762
CSD603612LG	60.00 x 36.00 x 12.00 1524 x 914 x 305	RAL 7035 Lt. Gray	14	14	CP6036	CP6036G	58.20 x 34.20 1478 x 869	58.50 x 34.50 1486 x 876	1	3-point	30.00 762
CSD242016	24.00 x 20.00 x 16.00 610 x 508 x 406	ANSI 61 Gray	14	16	CP2420	CP2420G	22.20 x 18.20 564 x 462	22.50 x 18.50 572 x 470	1	Quarter-turn	12.00 305
CSD242016LG	24.00 x 20.00 x 16.00 610 x 508 x 406	RAL 7035 Lt. Gray	14	16	CP2420	CP2420G	22.20 x 18.20 564 x 462	22.50 x 18.50 572 x 470	1	Quarter-turn	12.00 305
CSD242416	24.00 x 24.00 x 16.00 610 x 610 x 406	ANSI 61 Gray	14	14	CP2424	CP2424G	22.20 x 22.20 564 x 564	22.50 x 22.50 572 x 572	2	Quarter-turn	5.00 127
CSD242416LG	24.00 x 24.00 x 16.00 610 x 610 x 406	RAL 7035 Lt. Gray	14	14	CP2424	CP2424G	22.20 x 22.20 564 x 564	22.50 x 22.50 572 x 572	2	Quarter-turn	5.00 127
CSD302416	30.00 x 24.00 x 16.00 762 x 610 x 406	ANSI 61 Gray	14	14	CP3024	CP3024G	28.20 x 22.20 716 x 564	28.50 x 22.50 724 x 572	2	Quarter-turn	5.00 127
CSD302416LG	30.00 x 24.00 x 16.00 762 x 610 x 406	RAL 7035 Lt. Gray	14	14	CP3024	CP3024G	28.20 x 22.20 716 x 564	28.50 x 22.50 724 x 572	2	Quarter-turn	5.00 127
CSD362416	36.00 x 24.00 x 16.00 914 x 610 x 406	ANSI 61 Gray	14	14	CP3624	CP3624G	34.20 x 22.20 869 x 564	34.50 x 22.50 876 x 572	2	Quarter-turn	5.00 127
CSD362416LG	36.00 x 24.00 x 16.00 914 x 610 x 406	RAL 7035 Lt. Gray	14	14	CP3624	CP3624G	34.20 x 22.20 869 x 564	34.50 x 22.50 876 x 572	2	Quarter-turn	5.00 127
CSD363016	36.00 x 30.00 x 16.00 914 x 762 x 406	ANSI 61 Gray	14	14	CP3630	CP3630G	34.20 x 28.20 869 x 716	34.50 x 28.50 876 x 724	2	Quarter-turn	5.00 127
CSD363016LG	36.00 x 30.00 x 16.00 914 x 762 x 406	RAL 7035 Lt. Gray	14	14	CP3630	CP3630G	34.20 x 28.20 869 x 716	34.50 x 28.50 876 x 724	2	Quarter-turn	5.00 127
CSD363616	36.00 x 36.00 x 16.00 914 x 914 x 406	ANSI 61 Gray	14	14	CP3636	CP3636G	34.20 x 34.20 869 x 869	34.50 x 34.50 876 x 876	2	Quarter-turn	5.00 127
CSD363616LG	36.00 x 36.00 x 16.00 914 x 914 x 406	RAL 7035 Lt. Gray	14	14	CP3636	CP3636G	34.20 x 34.20 869 x 869	34.50 x 34.50 876 x 876	2	Quarter-turn	5.00 127
CSD423016	42.00 x 30.00 x 16.00 1067 x 762 x 406	ANSI 61 Gray	14	14	CP4230	CP4230G	40.20 x 28.20 1021 x 716	40.50 x 28.50 1029 x 724	1	3-point	21.00 533
CSD423016LG	42.00 x 30.00 x 16.00 1067 x 762 x 406	RAL 7035 Lt. Gray	14	14	CP4230	CP4230G	40.20 x 28.20 1021 x 716	40.50 x 28.50 1029 x 724	1	3-point	21.00 533
CSD423616	42.00 x 36.00 x 16.00 1067 x 914 x 406	ANSI 61 Gray	14	14	CP4236	CP4236G	40.20 x 34.20 1021 x 869	40.50 x 34.50 1029 x 876	1	3-point	21.00 533
CSD423616LG	42.00 x 36.00 x 16.00 1067 x 914 x 406	RAL 7035 Lt. Gray	14	14	CP4236	CP4236G	40.20 x 34.20 1021 x 869	40.50 x 34.50 1029 x 876	1	3-point	21.00 533
CSD483016	48.00 x 30.00 x 16.00 1219 x 762 x 406	ANSI 61 Gray	14	14	CP3048	CP3048G	28.20 x 46.20 716 x 1174	46.50 x 28.50 1181 x 724	1	3-point	24.00 610
CSD483016LG	48.00 x 30.00 x 16.00 1219 x 762 x 406	RAL 7035 Lt. Gray	14	14	CP3048	CP3048G	28.20 x 46.20 716 x 1174	46.50 x 28.50 1181 x 724	1	3-point	24.00 610
CSD483616	48.00 x 36.00 x 16.00 1219 x 914 x 406	ANSI 61 Gray	14	14	CP4836	CP4836G	46.20 x 34.20 1173 x 869	46.50 x 34.50 1181 x 876	1	3-point	24.00 610
CSD483616LG	48.00 x 36.00 x 16.00 1219 x 914 x 406	RAL 7035 Lt. Gray	14	14	CP4836	CP4836G	46.20 x 34.20 1173 x 869	46.50 x 34.50 1181 x 876	1	3-point	24.00 610

Catalog Number	AxBxC in./mm	Finish	Door Ga.	Body Ga.	CONCEPT Panel	Conductive CONCEPT Panel	Panel Size D x E in./mm	Mounting G x H in./mm	Latches qty.	Latches style	J in./mm
CSD603616	60.00 x 36.00 x 16.00 1524 x 914 x 406	ANSI 61 Gray	14	14	CP6036	CP6036G	58.20 x 34.20 1478 x 869	58.50 x 34.50 1486 x 876	1	3-point	30.00 762
CSD603616LG	60.00 x 36.00 x 16.00 1524 x 914 x 406	RAL 7035 Lt. Gray	14	14	CP6036	CP6036G	58.20 x 34.20 1478 x 869	58.50 x 34.50 1486 x 876	1	3-point	30.00 762
CSD242420	24.00 x 24.00 x 20.00 610 x 610 x 508	ANSI 61 Gray	14	14	CP2424	CP2424G	22.20 x 22.20 564 x 564	22.50 x 22.50 572 x 572	2	Quarter-turn	5.00 127
CSD242420LG	24.00 x 24.00 x 20.00 610 x 610 x 508	RAL 7035 Lt. Gray	14	14	CP2424	CP2424G	22.20 x 22.20 564 x 564	22.50 x 22.50 572 x 572	2	Quarter-turn	5.00 127
CSD302420	30.00 x 24.00 x 20.00 762 x 610 x 508	ANSI 61 Gray	14	14	CP3024	CP3024G	28.20 x 22.20 716 x 564	28.50 x 22.50 724 x 572	2	Quarter-turn	5.00 127
CSD302420LG	30.00 x 24.00 x 20.00 762 x 610 x 508	RAL 7035 Lt. Gray	14	14	CP3024	CP3024G	28.20 x 22.20 716 x 564	28.50 x 22.50 724 x 572	2	Quarter-turn	5.00 127
CSD363020	36.00 x 30.00 x 20.00 914 x 762 x 508	ANSI 61 Gray	14	14	CP3630	CP3630G	34.20 x 28.20 869 x 716	34.50 x 28.50 876 x 724	2	Quarter-turn	5.00 127
CSD363020LG	36.00 x 30.00 x 20.00 914 x 762 x 508	RAL 7035 Lt. Gray	14	14	CP3630	CP3630G	34.20 x 28.20 869 x 716	34.50 x 28.50 876 x 724	2	Quarter-turn	5.00 127
CSD483620	48.00 x 36.00 x 20.00 1219 x 914 x 508	ANSI 61 Gray	14	14	CP4836	CP4836G	46.20 x 34.20 1174 x 869	46.50 x 34.50 1181 x 876	1	3-point	24.00 610
CSD483620LG	48.00 x 36.00 x 20.00 1219 x 914 x 508	RAL 7035 Lt. Gray	14	14	CP4836	CP4836G	46.20 x 34.20 1174 x 869	46.50 x 34.50 1181 x 876	1	3-point	24.00 610

Purchase panels separately.

Optional NEMA-size panels require conversion kit Catalog Number CCPM4.

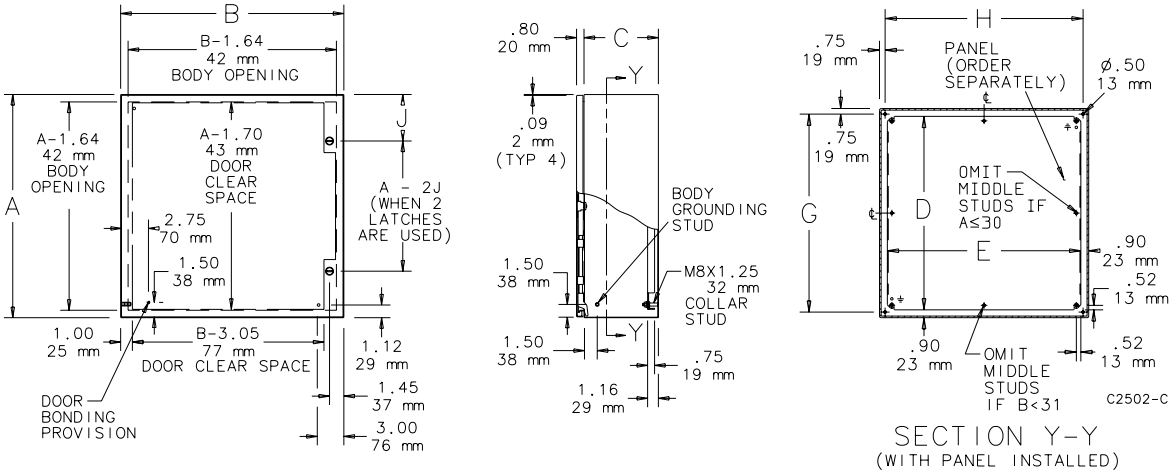

Standard Product **Single-Door Enclosures with Windows**

Catalog Number	AxBxC in./mm	Finish	Door Ga.	Body Ga.	CONCEPT Panel	CONCEPT Conductive Panel	Panel Size D x E in./mm	Mounting G x H in./mm	Window Size M x N in./mm	Latches qty.	Latches style	J in./mm
CSD12106W	12.00 x 10.00 x 6.00 305 x 254 x 152	ANSI 61 Gray	14	18	CP1210	CP1210G	10.20 x 8.20 259 x 208	10.50 x 8.50 267 x 216	8.49 x 5.17 216 x 131	1	Quarter-turn	6.00 152
CSD12106WLG	12.00 x 10.00 x 6.00 305 x 254 x 152	RAL 7035 Lt. Gray	14	18	CP1210	CP1210G	10.20 x 8.20 259 x 208	10.50 x 8.50 267 x 216	8.49 x 5.17 216 x 131	1	Quarter-turn	6.00 152
CSD12126W	12.00 x 12.00 x 6.00 305 x 305 x 152	ANSI 61 Gray	14	18	CP1212	CP1212G	10.20 x 10.20 259 x 259	10.50 x 10.50 267 x 267	8.49 x 7.30 216 x 185	1	Quarter-turn	6.00 152
CSD12126WLG	12.00 x 12.00 x 6.00 305 x 305 x 152	RAL 7035 Lt. Gray	14	18	CP1212	CP1212G	10.20 x 10.20 259 x 259	10.50 x 10.50 267 x 267	8.49 x 7.30 222 x 180	1	Quarter-turn	6.00 152
CSD16126W	16.00 x 12.00 x 6.00 406 x 305 x 152	ANSI 61 Gray	14	18	CP1612	CP1612G	14.20 x 10.20 361 x 259	14.50 x 10.50 368 x 267	12.49 x 7.30 317 x 185	1	Quarter-turn	8.00 203
CSD16126WLG	16.00 x 12.00 x 6.00 406 x 305 x 152	RAL 7035 Lt. Gray	14	18	CP1612	CP1612G	14.20 x 10.20 361 x 259	14.50 x 10.50 368 x 267	12.49 x 7.30 317 x 185	1	Quarter-turn	8.00 203
CSD20166W	20.00 x 16.00 x 6.00 508 x 406 x 152	ANSI 61 Gray	14	18	CP2016	CP2016G	18.20 x 14.20 462 x 361	18.50 x 14.50 470 x 368	16.49 x 11.30 419 x 287	1	Quarter-turn	10.00 254
CSD20166WLG	20.00 x 16.00 x 6.00 508 x 406 x 152	RAL 7035 Lt. Gray	14	18	CP2016	CP2016G	18.20 x 14.20 462 x 361	18.50 x 14.50 470 x 368	16.49 x 11.30 419 x 287	1	Quarter-turn	10.00 254
CSD20206W	20.00 x 20.00 x 6.00 508 x 508 x 152	ANSI 61 Gray	14	18	CP2020	CP2020G	18.20 x 18.20 462 x 462	18.50 x 18.50 470 x 470	16.49 x 15.30 419 x 389	1	Quarter-turn	10.00 254
CSD20206WLG	20.00 x 20.00 x 6.00 508 x 508 x 152	RAL 7035 Lt. Gray	14	18	CP2020	CP2020G	18.20 x 18.20 462 x 462	18.50 x 18.50 470 x 470	16.49 x 15.30 419 x 389	1	Quarter-turn	10.00 254
CSD24206W	24.00 x 20.00 x 6.00 610 x 508 x 152	ANSI 61 Gray	14	18	CP2420	CP2420G	22.20 x 18.20 564 x 462	22.50 x 18.50 572 x 470	20.49 x 15.30 520 x 389	1	Quarter-turn	12.00 305
CSD24206WLG	24.00 x 20.00 x 6.00 610 x 508 x 152	RAL 7035 Lt. Gray	14	18	CP2420	CP2420G	22.20 x 18.20 564 x 462	22.50 x 18.50 572 x 470	20.49 x 15.30 520 x 389	1	Quarter-turn	12.00 305
CSD24246W	24.00 x 24.00 x 6.00 610 x 610 x 152	ANSI 61 Gray	14	16	CP2424	CP2424G	22.20 x 22.20 564 x 564	22.50 x 22.50 572 x 572	20.49 x 18.07 520 x 459	2	Quarter-turn	5.00 127
CSD24246WLG	24.00 x 24.00 x 6.00 610 x 610 x 152	RAL 7035 Lt. Gray	14	16	CP2424	CP2424G	22.20 x 22.20 564 x 564	22.50 x 22.50 572 x 572	20.49 x 18.07 520 x 459	2	Quarter-turn	5.00 127

Catalog Number	AxBxC in./mm	Finish	Door Ga.	Body Ga.	CONCEPT Panel	CONCEPT Conductive Panel	Panel Size D x E in./mm	Mounting G x H in./mm	Window Size M x N in./mm	Latches qty.	Latches style	J in./mm
CSD30246W	30.00 x 24.00 x 6.00 762 x 610 x 152	ANSI 61 Gray	14	16	CP3024	CP3024G	28.20 X 22.20 716 x 564	28.50 x 22.50 267 x 216	26.49 x 18.07 673 x 459	1	Quarter-turn	5.00 127
CSD30246WLG	30.00 x 24.00 x 6.00 762 x 610 x 152	RAL 7035 Lt. Gray	14	16	CP3024	CP3024G	28.20 X 22.20 716 x 564	28.50 x 22.50 267 x 216	26.49 x 18.07 673 x 459	1	Quarter-turn	5.00 127
CSD12108W	12.00 x 10.00 x 8.00 305 x 254 x 203	ANSI 61 Gray	14	18	CP1210	CP1210G	10.20 x 8.20 259 x 208	10.50 x 8.50 267 x 216	8.49 x 5.17 216 x 131	1	Quarter-turn	6.00 152
CSD12108WLG	12.00 x 10.00 x 8.00 305 x 254 x 203	RAL 7035 Lt. Gray	14	18	CP1210	CP1210G	10.20 x 8.20 259 x 208	10.50 x 8.50 267 x 216	8.49 x 5.17 216 x 131	1	Quarter-turn	6.00 152
CSD12128W	12.00 x 12.00 x 8.00 305 x 305 x 203	ANSI 61 Gray	14	18	CP1212	CP1212G	10.20 X 10.20 259 x 259	10.50 x 10.50 267 x 267	8.49 x 7.30 216 x 185	1	Quarter-turn	6.00 152
CSD12128WLG	12.00 x 12.00 x 8.00 305 x 305 x 203	RAL 7035 Lt. Gray	14	18	CP1212	CP1212G	10.20 X 10.20 259 x 259	10.50 x 10.50 267 x 267	8.49 x 7.30 216 x 185	1	Quarter-turn	6.00 152
CSD16128W	16.00 x 12.00 x 8.00 406 x 305 x 203	ANSI 61 Gray	14	18	CP1612	CP1612G	14.20 x 10.20 361 x 259	14.50 x 10.50 368 x 267	12.49 x 7.30 317 x 185	1	Quarter-turn	8.00 203
CSD16128WLG	16.00 x 12.00 x 8.00 406 x 305 x 203	RAL 7035 Lt. Gray	14	18	CP1612	CP1612G	14.20 x 10.20 361 x 259	14.50 x 10.50 368 x 267	12.49 x 7.30 317 x 185	1	Quarter-turn	8.00 203
CSD20168W	20.00 x 16.00 x 8.00 508 x 406 x 203	ANSI 61 Gray	14	18	CP2016	CP2016	18.20 x 14.20 462 x 361	18.50 x 14.50 470 x 368	16.49 x 11.30 419 x 287	1	Quarter-turn	10.00 254
CSD20168WLG	20.00 x 16.00 x 8.00 508 x 406 x 203	RAL 7035 Lt. Gray	14	18	CP2016	CP2016G	18.20 x 14.20 462 x 361	18.50 x 14.50 470 x 368	16.49 x 11.30 419 x 287	1	Quarter-turn	10.00 254
CSD20208W	20.00 x 20.00 x 8.00 508 x 508 x 203	ANSI 61 Gray	14	18	CP2020	CP2020G	18.20 x 18.20 462 x 462	18.50 x 18.50 470 x 470	16.49 x 15.30 419 x 389	1	Quarter-turn	10.00 254
CSD20208WLG	20.00 x 20.00 x 8.00 508 x 508 x 203	RAL 7035 Lt. Gray	14	18	CP2020	CP2020G	18.20 x 18.20 462 x 462	18.50 x 18.50 470 x 470	16.49 x 15.30 419 x 389	1	Quarter-turn	10.00 254
CSD24208W	24.00 x 20.00 x 8.00 610 x 508 x 203	ANSI 61 Gray	14	18	CP2420	CP2420G	22.20 x 18.20 564 x 462	22.50 x 18.50 572 x 470	20.49 x 15.30 520 x 389	1	Quarter-turn	12.00 305
CSD24208WLG	24.00 x 20.00 x 8.00 610 x 508 x 203	RAL 7035 Lt. Gray	14	18	CP2420	CP2420G	22.20 x 18.20 564 x 462	22.50 x 18.50 572 x 470	20.49 x 15.30 520 x 389	1	Quarter-turn	12.00 305
CSD24248W	24.00 x 24.00 x 8.00 610 x 610 x 203	ANSI 61 Gray	14	16	CP2424	CP2424G	22.20 x 22.20 564 x 564	22.50 x 22.50 572 x 572	20.49 x 18.07 520 x 459	2	Quarter-turn	5.00 127
CSD24248WLG	24.00 x 24.00 x 8.00 610 x 610 x 203	RAL 7035 Lt. Gray	14	16	CP2424	CP2424G	22.20 x 22.20 564 x 564	22.50 x 22.50 572 x 572	20.49 x 18.07 250 x 459	2	Quarter-turn	5.00 127
CSD30248W	30.00 x 24.00 x 8.00 762 x 610 x 203	ANSI 61 Gray	14	16	CP3024	CP3024G	28.20 x 22.20 716 x 564	28.50 x 22.50 724 x 572	26.49 x 18.07 673 x 459	2	Quarter-turn	5.00 127
CSD30248WLG	30.00 x 24.00 x 8.00 762 x 610 x 203	RAL 7035 Lt. Gray	14	16	CP3024	CP3024G	28.20 x 22.20 716 x 564	28.50 x 22.50 724 x 572	26.49 x 18.07 673 x 459	2	Quarter-turn	5.00 127
CSD161210W	16.00 x 12.00 x 10.00 406 x 305 x 254	ANSI 61 Gray	14	18	CP1612	CP1612G	14.20 x 10.20 361 x 259	14.50 x 10.50 368 x 267	12.49 x 7.30 317 x 185	1	Quarter-turn	8.00 203
CSD161210WLG	16.00 x 12.00 x 10.00 406 x 305 x 254	RAL 7035 Lt. Gray	14	18	CP1612	CP1612G	14.20 x 10.20 361 x 259	14.50 x 10.50 368 x 267	12.49 x 7.30 317 x 185	1	Quarter-turn	8.00 203
CSD201610W	20.00 x 16.00 x 10.00 508 x 406 x 254	ANSI 61 Gray	14	18	CP2016	CP2016G	18.20 x 14.20 462 x 361	18.50 x 14.50 470 x 368	16.49 x 11.30 419 x 287	1	Quarter-turn	10.00 254
CSD201610WLG	20.00 x 16.00 x 10.00 508 x 406 x 254	RAL 7035 Lt. Gray	14	18	CP2016	CP2016G	18.20 x 14.20 462 x 361	18.50 x 14.50 470 x 368	16.49 x 11.30 419 x 287	1	Quarter-turn	10.00 254
CSD202010W	20.00 x 20.00 x 10.00 508 x 508 x 254	ANSI 61 Gray	14	18	CP2020	CP2020G	18.20 x 18.20 462 x 462	18.50 x 18.50 470 x 470	16.49 x 15.30 419 x 389	1	Quarter-turn	10.00 254
CSD202010WLG	20.00 x 20.00 x 10.00 508 x 508 x 254	RAL 7035 Lt. Gray	14	18	CP2020	CP2020G	18.20 x 18.20 462 x 462	18.50 x 18.50 470 x 470	16.49 x 15.30 419 x 389	1	Quarter-turn	10.00 254
CSD242010W	24.00 x 20.00 x 10.00 610 x 508 x 254	ANSI 61 Gray	14	18	CP2420	CP2420G	22.20 x 18.20 564 x 462	22.50 x 18.50 572 x 470	20.49 x 15.30 527 x 384	1	Quarter-turn	12.00 305
CSD242010WLG	24.00 x 20.00 x 10.00 610 x 508 x 254	RAL 7035 Lt. Gray	14	18	CP2420	CP2420G	22.20 x 18.20 564 x 462	22.50 x 18.50 572 x 470	20.49 x 15.30 527 x 384	1	Quarter-turn	12.00 305
CSD242410W	24.00 x 24.00 x 10.00 610 x 610 x 254	ANSI 61 Gray	14	16	CP2424	CP2424G	22.20 x 22.20 564 x 564	22.50 x 22.50 572 x 572	20.49 x 18.07 520 x 459	2	Quarter-turn	5.00 127
CSD242410WLG	24.00 x 24.00 x 10.00 610 x 610 x 254	RAL 7035 Lt. Gray	14	16	CP2424	CP2424G	22.20 x 22.20 564 x 564	22.50 x 22.50 572 x 572	20.49 x 18.07 520 x 459	2	Quarter-turn	5.00 127
CSD302410W	30.00 x 24.00 x 10.00 762 x 610 x 254	ANSI 61 Gray	14	16	CP3024	CP3024G	28.20 x 22.20 716 x 564	28.50 x 22.50 724 x 572	26.49 x 18.07 673 x 459	2	Quarter-turn	5.00 127
CSD302410WLG	30.00 x 24.00 x 10.00 762 x 610 x 254	RAL 7035 Lt. Gray	14	16	CP3024	CP3024G	28.20 x 22.20 716 x 564	28.50 x 22.50 724 x 572	26.49 x 18.07 673 x 459	2	Quarter-turn	5.00 127
CSD202012W	20.00 x 20.00 x 12.00 508 x 508 x 305	ANSI 61 Gray	14	16	CP2020	CP2020G	18.20 x 18.20 462 x 462	18.50 x 18.50 470 x 470	16.49 x 15.30 419 x 389	1	Quarter-turn	10.00 254
CSD202012WLG	20.00 x 20.00 x 12.00 508 x 508 x 305	RAL 7035 Lt. Gray	14	16	CP2020	CP2020G	18.20 x 18.20 462 x 462	18.50 x 18.50 470 x 470	16.49 x 15.30 419 x 389	1	Quarter-turn	10.00 254
CSD242012W	24.00 x 20.00 x 12.00 610 x 508 x 305	ANSI 61 Gray	14	16	CP2420	CP2420G	22.20 x 18.20 564 x 462	22.50 x 18.50 572 x 470	20.49 x 15.30 520 x 389	1	Quarter-turn	12.00 305
CSD242012WLG	24.00 x 20.00 x 12.00 610 x 508 x 305	RAL 7035 Lt. Gray	14	16	CP2420	CP2420G	22.20 x 18.20 564 x 462	22.50 x 18.50 572 x 470	20.49 x 15.30 520 x 389	1	Quarter-turn	12.00 305
CSD242412W	24.00 x 24.00 x 12.00 610 x 610 x 305	ANSI 61 Gray	14	16	CP2424	CP2424G	22.20 x 22.20 564 x 564	22.50 x 22.50 572 x 572	20.49 x 18.07 520 x 459	2	Quarter-turn	5.00 127
CSD242412WLG	24.00 x 24.00 x 12.00 610 x 610 x 305	RAL 7035 Lt. Gray	14	16	CP2424	CP2424G	22.20 x 22.20 564 x 564	22.50 x 22.50 572 x 572	20.49 x 18.07 527 x 449	2	Quarter-turn	5.00 127
CSD302412W	30.00 x 24.00 x 12.00 762 x 610 x 305	ANSI 61 Gray	14	16	CP3024	CP3024G	28.20 x 22.20 716 x 564	28.50 x 22.50 724 x 572	26.49 x 18.07 673 x 459	2	Quarter-turn	5.00 127
CSD302412WLG	30.00 x 24.00 x 12.00 762 x 610 x 305	RAL 7035 Lt. Gray	14	16	CP3024	CP3024G	28.20 x 22.20 716 x 564	28.50 x 22.50 724 x 572	26.49 x 18.07 679 x 449	2	Quarter-turn	5.00 127
CSD242416W	24.00 x 24.00 x 16.00 610 x 610 x 406	ANSI 61 Gray	14	14	CP2424	CP2424G	22.20 x 22.20 564 x 564	22.50 x 22.50 572 x 572	20.49 x 18.07 520 x 459	2	Quarter-turn	5.00 127

Catalog Number	AxBxC in./mm	Finish	Door Ga.	Body Ga.	CONCEPT Panel	CONCEPT Conductive Panel	Panel Size D x E in./mm	Mounting G x H in./mm	Window Size M x N in./mm	Latches qty.	Latches style	J in./mm
CSD242416WLG	24.00 x 24.00 x 16.00 610 x 610 x 406	RAL 7035 Lt. Gray	14	14	CP2424	CP2424G	22.20 x 22.20 564 x 564	22.50 x 22.50 572 x 572	20.49 x 18.07 520 x 459	2	Quarter-turn	5.00 127
CSD242420W	24.00 x 24.00 x 20.00 610 x 610 x 508	ANSI 61 Gray	14	14	CP2424	CP2424G	22.20 x 22.20 564 x 564	22.50 x 22.50 572 x 572	20.49 x 18.07 520 x 459	2	Quarter-turn	5.00 127
CSD242420WLG	24.00 x 24.00 x 20.00 610 x 610 x 508	RAL 7035 Lt. Gray	14	14	CP2424	CP2424G	22.20 x 22.20 564 x 564	22.50 x 22.50 572 x 572	20.49 x 18.07 520 x 459	2	Quarter-turn	5.00 127
CSD302420W	30.00 x 24.00 x 20.00 762 x 610 x 508	ANSI 61 Gray	14	14	CP3024	CP3024G	28.20 x 22.20 716 x 564	28.50 x 22.50 724 x 572	26.49 x 18.07 673 x 459	2	Quarter-turn	5.00 127
CSD302420WLG	30.00 x 24.00 x 20.00 762 x 610 x 508	RAL 7035 Lt. Gray	14	14	CP3024	CP3024G	28.20 x 22.20 716 x 564	28.50 x 22.50 724 x 572	26.49 x 18.07 673 x 459	2	Quarter-turn	5.00 127

Purchase panels separately.

Optional NEMA-size panels require conversion kit Catalog Number CCPM4.

CONCEPT Single-Door Wall-Mounted Enclosures with Windows

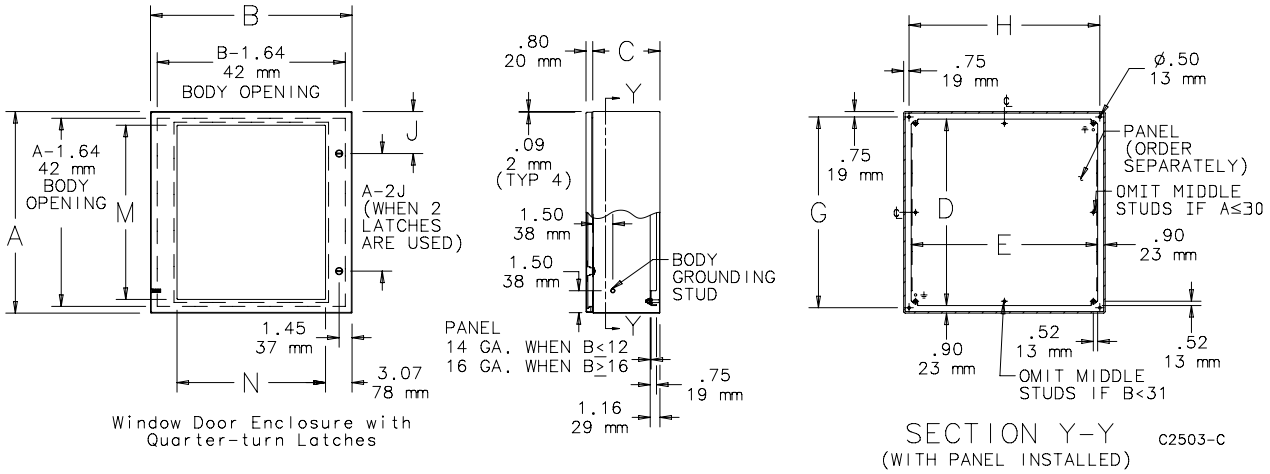

Standard Product **Flush-Mounted Enclosures**

Catalog Number	AxBxC in./mm	Finish	Door Ga.	Body Ga.	CONCEPT Panel	Conductive CONCEPT Panel	Panel Size D x E in./mm	Mounting G x H in./mm	Latches qty.	Latches style	J in./mm
CFM12126	12.00 x 12.00 x 6.00 305 x 305 x 152	ANSI 61 Gray	16	16	CP1212	CP1212G	10.20 x 10.20 259 x 259	12.75 x 14.25 324 x 362	1	Quarter-turn	6.00 152
CFM12126LG	12.00 x 12.00 x 6.00 305 x 305 x 152	RAL 7035 Lt. Gray	16	16	CP1212	CP1212G	10.20 x 10.20 259 x 259	12.75 x 14.25 324 x 362	1	Quarter-turn	6.00 152
CFM16126	16.00 x 12.00 x 6.00 406 x 305 x 152	ANSI 61 Gray	16	16	CP1612	CP1612G	14.20 x 10.20 361 x 259	16.75 x 14.25 425 x 362	1	Quarter-turn	8.00 203
CFM16126LG	16.00 x 12.00 x 6.00 406 x 305 x 152	RAL 7035 Lt. Gray	16	16	CP1612	CP1612G	14.20 x 10.20 361 x 259	16.75 x 14.25 425 x 362	1	Quarter-turn	8.00 203
CFM20166	20.00 x 16.00 x 6.00 508 x 406 x 152	ANSI 61 Gray	16	16	CP2016	CP2016G	18.20 x 14.20 462 x 361	20.75 x 18.25 527 x 463	1	Quarter-turn	10.00 254
CFM20166LG	20.00 x 16.00 x 6.00 508 x 406 x 152	RAL 7035 Lt. Gray	16	16	CP2016	CP2016G	18.20 x 14.20 462 x 361	20.75 x 18.25 527 x 463	1	Quarter-turn	10.00 254
CFM20206	20.00 x 20.00 x 6.00 508 x 508 x 152	ANSI 61 Gray	16	16	CP2020	CP2020G	18.20 x 18.20 462 x 462	20.75 x 22.25 527 x 565	1	Quarter-turn	10.00 254
CFM20206LG	20.00 x 20.00 x 6.00 508 x 508 x 152	RAL 7035 Lt. Gray	16	16	CP2020	CP2020G	18.20 x 18.20 462 x 462	20.75 x 22.25 527 x 565	1	Quarter-turn	10.00 254
CFM24208	24.00 x 20.00 x 8.00 610 x 508 x 203	ANSI 61 Gray	16	16	CP2420	CP2420G	22.20 x 18.20 564 x 462	24.75 x 22.25 629 x 565	1	Quarter-turn	12.00 305
CFM24208LG	24.00 x 20.00 x 8.00 610 x 508 x 203	RAL 7035 Lt. Gray	16	16	CP2420	CP2420G	22.20 x 18.20 564 x 462	24.75 x 22.25 629 x 565	1	Quarter-turn	12.00 305
CFM24248	24.00 x 24.00 x 8.00 610 x 610 x 203	ANSI 61 Gray	14	16	CP2424	CP2424G	22.20 x 22.20 564 x 564	24.75 x 26.25 629 x 667	2	Quarter-turn	5.00 127
CFM24248LG	24.00 x 24.00 x 8.00 610 x 610 x 203	RAL 7035 Lt. Gray	14	16	CP2424	CP2424G	22.20 x 22.20 564 x 564	24.75 x 26.25 629 x 667	2	Quarter-turn	5.00 127
CFM30248	30.00 x 24.00 x 8.00 762 x 610 x 203	ANSI 61 Gray	14	16	CP3024	CP3024G	28.20 x 22.20 716 x 564	30.75 x 26.25 781 x 667	2	Quarter-turn	5.00 127
CFM30248LG	30.00 x 24.00 x 8.00 762 x 610 x 203	RAL 7035 Lt. Gray	14	16	CP3024	CP3024G	28.20 x 22.20 716 x 564	30.75 x 26.25 781 x 667	2	Quarter-turn	5.00 127

Purchase panels separately.

Optional NEMA-size panels require conversion kit Catalog Number CCPM4.

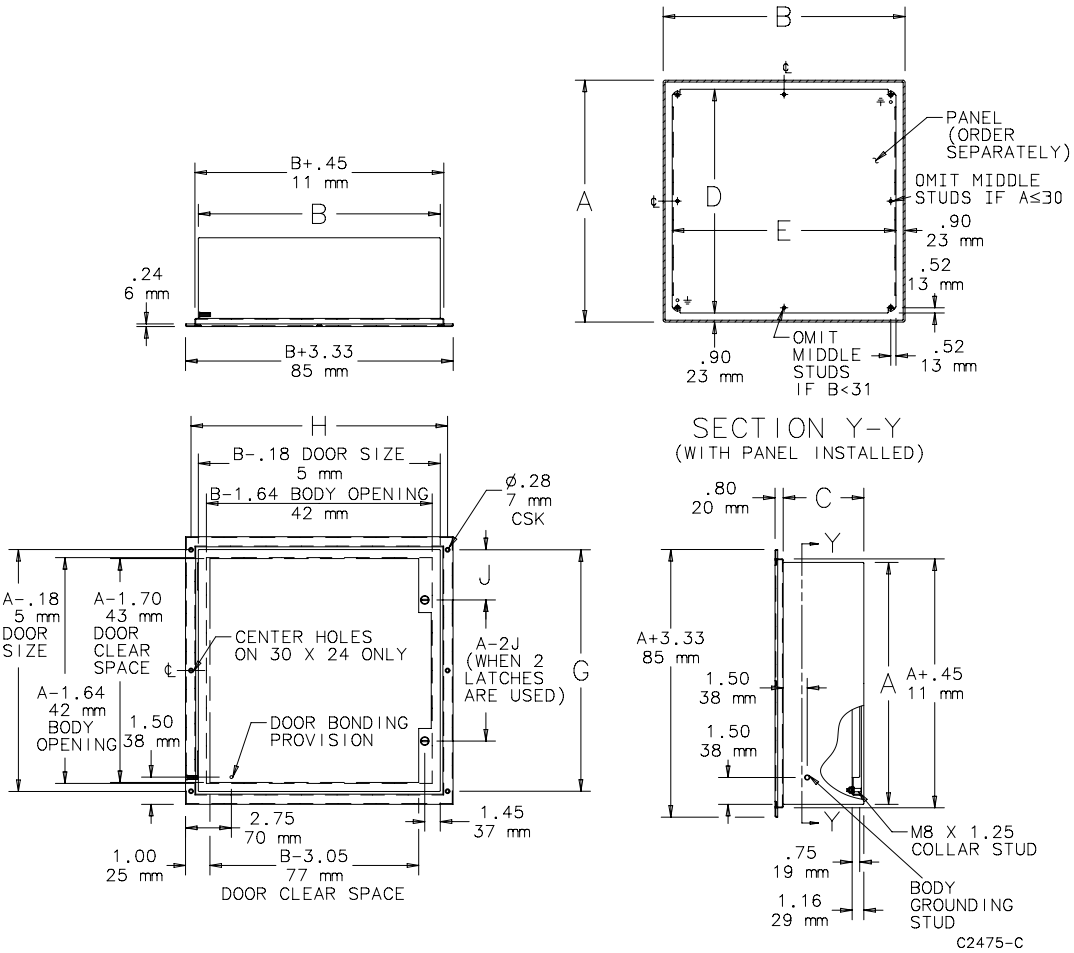

Standard Product **Two-Door Enclosures**

Catalog Number	AxBxC in./mm	Finish	Door Ga.	Body Ga.	CONCEPT Panel	Conductive CONCEPT Panel	Panel Size D x E in./mm	Mounting G x H in./mm	Latches qty.	Latches style	J in./mm
CTD24428	24.00 x 42.00 x 8.00 610 x 1067 x 203	ANSI 61 Gray	14	14	CP2442	CP2442G	22.20 x 40.20 259 x 564	22.50 x 40.50 572 x 1029	1	3-point	12.00 305
CTD24428LG	24.00 x 42.00 x 8.00 610 x 1067 x 203	RAL 7035 Lt. Gray	14	14	CP2442	CP2442G	22.20 x 40.20 259 x 564	22.50 x 40.50 572 x 1029	1	3-point	12.00 305
CTD24488	24.00 x 48.00 x 8.00 610 x 1219 x 203	ANSI 61 Gray	14	14	CP4824	CP4824G	46.20 x 22.20 1174 x 564	22.50 x 46.50 572 x 1181	1	3-point	12.00 305
CTD24488LG	24.00 x 48.00 x 8.00 610 x 1219 x 203	RAL 7035 Lt. Gray	14	14	CP4824	CP4824G	46.20 x 22.20 1174 x 564	22.50 x 46.50 572 x 1181	1	3-point	12.00 305
CTD30488	30.00 x 48.00 x 8.00 762 x 1219 x 203	ANSI 61 Gray	14	14	CP3048	CP3048G	28.20 x 46.20 259 x 716	28.50 x 46.50 724 x 1181	1	3-point	15.00 381
CTD30488LG	30.00 x 48.00 x 8.00 762 x 1219 x 203	RAL 7035 Lt. Gray	14	14	CP3048	CP3048G	28.20 x 46.20 259 x 716	28.50 x 46.50 724 x 1181	1	3-point	15.00 381
CTD244210	24.00 x 42.00 x 10.00 610 x 1067 x 254	ANSI 61 Gray	14	14	CP2442	CP2442G	22.20 x 40.20 564 x 1021	22.50 x 40.50 572 x 1029	1	3-point	12.00 305
CTD244210LG	24.00 x 42.00 x 10.00 610 x 1067 x 254	RAL 7035 Lt. Gray	14	14	CP2442	CP2442G	22.20 x 40.20 564 x 1021	22.50 x 40.50 572 x 1029	1	3-point	12.00 305
CTD304210	30.00 x 42.00 x 10.00 762 x 1067 x 254	ANSI 61 Gray	14	14	CP4230	CP4230G	40.20 x 28.20 1021 x 716	28.50 x 40.50 724 x 1029	1	3-point	15.00 381
CTD304210LG	30.00 x 42.00 x 10.00 762 x 1067 x 254	RAL 7035 Lt. Gray	14	14	CP4230	CP4230G	40.20 x 28.20 1021 x 716	28.50 x 40.50 724 x 1029	1	3-point	15.00 381
CTD304810	30.00 x 48.00 x 10.00 762 x 1219 x 254	ANSI 61 Gray	14	14	CP3048	CP3048G	28.20 x 46.20 716 x 1174	28.50 x 46.50 724 x 1181	1	3-point	15.00 381
CTD304810LG	30.00 x 48.00 x 10.00 762 x 1219 x 254	RAL 7035 Lt. Gray	14	14	CP3048	CP3048G	28.20 x 46.20 716 x 1174	28.50 x 46.50 724 x 1181	1	3-point	15.00 381
CTD306012	30.00 x 60.00 x 12.00 762 x 1524 x 305	ANSI 61 Gray	14	14	CP3060	CP3060G	28.20 x 58.20 361 x 716	28.50 x 58.50 724 x 1486	1	3-point	15.00 381
CTD306012LG	30.00 x 60.00 x 12.00 762 x 1524 x 305	RAL 7035 Lt. Gray	14	14	CP3060	CP3060G	28.20 x 58.20 361 x 716	28.50 x 58.50 724 x 1486	1	3-point	15.00 381

Catalog Number	AxBxC in./mm	Finish	Door Ga.	Body Ga.	CONCEPT Panel	Conductive CONCEPT Panel	Panel Size D x E in./mm	Mounting G x H in./mm	Latches qty.	Latches style	J in./mm
CTD364212	36.00 x 42.00 x 12.00 914 x 1067 x 305	ANSI 61 Gray	14	14	CP4236	CP4236G	40.20 x 34.20 1021 x 869	34.50 x 40.50 876 x 1029	1	3-point	18.00 457
CTD364212LG	36.00 x 42.00 x 12.00 914 x 1067 x 305	RAL 7035 Lt. Gray	14	14	CP4236	CP4236G	40.20 x 34.20 1021 x 869	34.50 x 40.50 876 x 1029	1	3-point	18.00 457
CTD364812	36.00 x 48.00 x 12.00 914 x 1219 x 305	ANSI 61 Gray	14	14	CP4836	CP4836G	34.20 x 46.20 462 x 869	34.50 x 46.50 876 x 1181	1	3-point	18.00 457
CTD364812LG	36.00 x 48.00 x 12.00 914 x 1219 x 305	RAL 7035 Lt. Gray	14	14	CP4836	CP4836G	34.20 x 46.20 462 x 869	34.50 x 46.50 876 x 1181	1	3-point	18.00 457
CTD366012	36.00 x 60.00 x 12.00 914 x 1524 x 305	ANSI 61 Gray	14	14	CP6036	CP6036G	34.20 x 58.20 462 x 869	34.50 x 58.50 876 x 1486	1	3-point	18.00 457
CTD366012LG	36.00 x 60.00 x 12.00 914 x 1524 x 305	RAL 7035 Lt. Gray	14	14	CP6036	CP6036G	34.20 x 58.20 462 x 869	34.50 x 58.50 876 x 1486	1	3-point	18.00 457
CTD424212	42.00 x 42.00 x 12.00 1067 x 1067 x 305	ANSI 61 Gray	14	14	CP4242	CP4242G	40.20 x 40.20 1021 x 1021	40.50 x 40.50 1029 x 1029	1	3-point	21.00 533
CTD424212LG	42.00 x 42.00 x 12.00 1067 x 1067 x 305	RAL 7035 Lt. Gray	14	14	CP4242	CP4242G	40.20 x 40.20 1021 x 1021	40.50 x 40.50 1029 x 1029	1	3-point	21.00 533
CTD426012	42.00 x 60.00 x 12.00 1067 x 1524 x 305	ANSI 61 Gray	14	14	CP4260	CP4260G	40.20 x 58.20 101 x 1478	40.50 x 58.50 1029 x 1478	1	3-point	21.00 533
CTD426012LG	42.00 x 60.00 x 12.00 1067 x 1524 x 305	RAL 7035 Lt. Gray	14	14	CP4260	CP4260G	40.20 x 58.20 101 x 1478	40.50 x 58.50 1029 x 1478	1	3-point	21.00 533
CTD484812	48.00 x 48.00 x 12.00 1219 x 1219 x 305	ANSI 61 Gray	14	14	CP4848	CP4848G	46.20 x 46.20 1174 x 1174	46.50 x 46.50 1181 x 1181	1	3-point	24.00 610
CTD484812LG	48.00 x 48.00 x 12.00 1219 x 1219 x 305	RAL 7035 Lt. Gray	14	14	CP4848	CP4848G	46.20 x 46.20 1174 x 1174	46.50 x 46.50 1181 x 1181	1	3-point	24.00 610
CTD364216	36.00 x 42.00 x 16.00 914 x 1067 x 406	ANSI 61 Gray	14	14	CP4236	CP4236G	40.20 x 34.20 1021 x 869	34.50 x 40.50 876 x 1029	1	3-point	18.00 457
CTD364216LG	36.00 x 42.00 x 16.00 914 x 1067 x 406	RAL 7035 Lt. Gray	14	14	CP4236	CP4236G	40.20 x 34.20 1021 x 869	34.50 x 40.50 876 x 1029	1	3-point	18.00 457

Purchase panels separately.

Optional NEMA-size panels require conversion kit Catalog Number CCPM4.

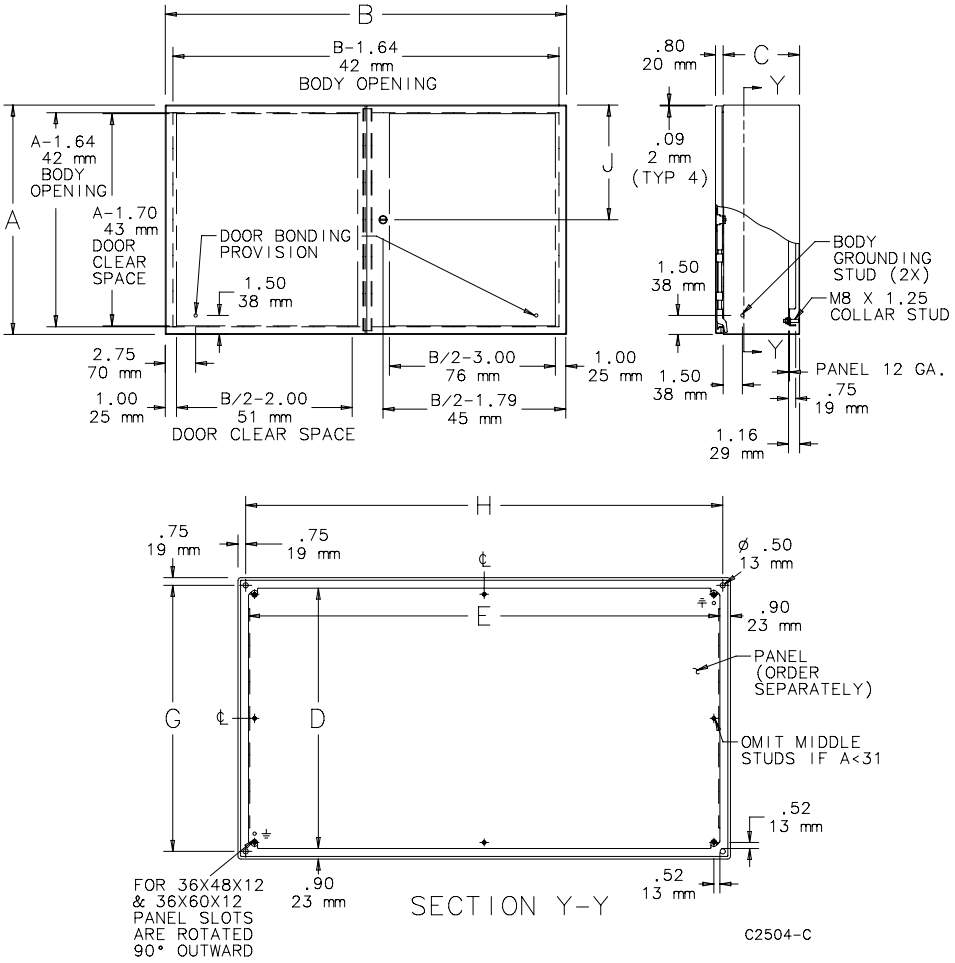

Popular Cooling Products

Enclosure Depth (C Dimension)	Popular Cooling Solutions*
6.00 in. (152 mm)	SF0416414 (Filter Fan) & SG0400404 (Exhaust Grille)
8.00 in. (203mm)	SF0516414 (Filter Fan) & SG0500404 (Exhaust Grille)
10.00 in. (254mm)	SF0916414 (Filter Fan) & SG0900404 (Exhaust Grille)
16.00 in. (406mm)	SF1316414 (Filter Fan) & SG1300404 (Exhaust Grille)
20.00 in. (508mm)	SF1316414 (Filter Fan) & SG1300404 (Exhaust Grille)

* **Important:** Visit tools.hoffmanonline.com/attachments to access our **Cooling Selection Tool** to determine the appropriate cooling solution for your application.

Popular Accessories

Enclosure Width (B Dimension)	Lights	Hole Seals	Window Kits
12.00 in. (305 mm)	LEDA2M35	AS050	APWK53NF
16.00 in. (406mm)	LEDA2M35	AS050	APWK53NF
20.00 in. (508mm)	LED24V15	AS050	APWK53NF
24.00 in. (610mm)	LED24V15	AS050	APWK53NF
30.00 in. (762mm)	LED24V15	AS050	APWK53NF
36.00 in. (914mm)	LED24V15	AS050	APWK53NF

LISTEN.
THINK.
SOLVE.®

PRODUCT PROFILE

Remote Access Modem Kits

Remote Connection Solutions For Your Control Systems

Serial Modems

- Designed for use in industrial environments
- Compact design uses only 2 inches of DIN rail space
- Flexible power requirements
- Phone line connection speeds up to 56K
- Multiple cables and adaptors are provided for connection to a variety of control system components
- Remote configuration (allows reconfiguration of a remote modem to match changes in the control system)
- Password protection, password with callback and Caller ID (protects control systems from unauthorized access)
- Profile selection switches (allow preprogrammed profiles to be selected without connecting to a computer)

Ethernet Modems

- Designed for use in industrial environments
- Compact design uses only 2 inches of DIN rail space
- Flexible power requirements
- Phone line connection speeds up to 56K
- Data compression increases phone line throughput by 40%
- 17 diagnostics LEDs report system status and network activity
- VLAN capability reduces network traffic
- Network debugging with port mirroring and port diagnostics
- IGMP Snooping to minimize network traffic
- Dial-out capability to route packets to other networks
- Multiple levels of security:
- DHCP/BOOTP server (services up to 30 nodes on your network)

Remote Access Modem Kits are specifically designed for remote connection to control systems and include everything you need to easily connect the first time, and every time.

Remotely connecting to a control system using an off-theshelf, computer store modem can often be a difficult task.

Remote Access Dial-in Ethernet Modems allow you to quickly connect to your remote Ethernet network from any standard phone line, improving your ability to respond to critical situations without actually being on site. Now you can eliminate those weekend trips to the plant, or costly travel to field locations.

From home, your office or another facility, you can easily:

- Perform diagnostics
- Make program changes
- Upload and download new programs
- Update firmware
- Collect data
- Monitor system status

Specifications

	9300-RADES Remote Access Dial-in Ethernet Modem	9300-RADKIT Remote Access Dial-in Modem	9300-RAPMKIT Remote Access Paging Modem
Environmental:			
Operating Temperature:	0 TO 60º C (32 TO 152º F)		
Storage Temperature:	-20 TO 70º C (-4 TO 158º F)		
Weight:	1.5 LBS.		
Compliance:	FCC part 68, Part 15-class a, UL/CSA/IC Certified, CTR 21, CE, UL Class 1 Div 2 Hazardous	FCC part 68, Part 15-class b, UL/CSA/IC Certified, CTR 21, UL Class 1 Div. 2	FCC part 68, Part 15-class b, UL/CSA/IC Certified, CTR 21
Power Requirements:	8 to 48VDC (200 mA at 24V, 300mA max)	8 to 48VDC (100 MA at 24V, 200MA at 12V)	
Network Ports:	4 RJ-45 10/100 full/half duplex jacks		
DTE Rates (Asynchronous):	Host to DSP - Internal high speed serial interface	230.4K,115K,57.6K, 38.4K, 19.2K, 9600, 4800, 2400,1200 and 300 bps	
Line Rates (V90):	56K thru 28K bps		
Line Rates (V.34):	28.8K thru 2400 bps		
Error Control/Data Compression:	V.42, V.42bis MNP Classes 3,4		
Phone Interface Connection:	RJ11C		
Phone Line Requirements:	Unconditioned PSTN dial-up		
Transmit Level:	Dial Line: -10dBm fixed		
Carrier Detect Threshold:	-10 to -43dBm		
Switch Characteristics:	VLAN, QoS, IGMP, Port Mirroring		
Routing Characteristics:	Automatic Dial-Out, DHCP, BOOTP, PAP, CHAP		
Protocols:	TCP/IP, PPP, RIP, NAT, Telnet, FTP, DHCP, BOOTP		
Switches:		4 Default Profile Selection Switches, Power Switch	
Facsimile Compatibility:		ITU Group 3 fax machines and fax modems, ITU V.17, V.29, V.27ter, V.21Channel 2, T.30, T.4, EIA-578 Class 1 compatibility for fax software	
Facsimile Operating Speeds:		Send/receive: 14,400 bps to 2400 bps	
Accessories:	Quick Start Guide, AC Adapter, 6 ft. Patch Cable, Phone line cable	Quick Start Guide, AC Adapter, Serial cable kit, Phone line cable	

Ordering

To order a Remote Access Modem kit use the appropriate part number above.

More Information

For more information about Remote Access Modems, contact your local Rockwell Automation sales office or authorized distributor, or visit:

http://support.rockwellautomation.com/modem

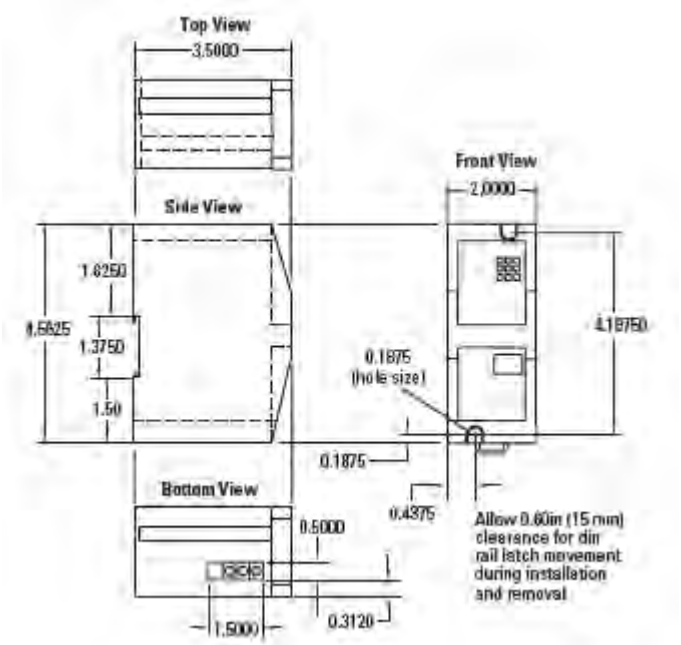

www.rockwellautomation.com

Power, Control and Information Solutions Headquarters

Americas: Rockwell Automation, 1201 South Second Street, Milwaukee, WI 53204-2496 USA, Tel: (1) 414.382.2000, Fax: (1) 414.382.4444
Europe/Middle East/Africa: Rockwell Automation, Vorstlaan/Boulevard du Souverain 36, 1170 Brussels, Belgium, Tel: (32) 2 663 0600, Fax: (32) 2 663 0640
Asia Pacific: Rockwell Automation, Level 14, Core F, Cyberport 3, 100 Cyberport Road, Hong Kong, Tel: (852) 2887 4788, Fax: (852) 2508 1846

Publication GMSA10-PP014D -EN-E – July 2008 — Supersedes Publication GMSC10-PP004C-EN-P – October 2005

Copyright ©2008 Rockwell Automation, Inc. All Rights Reserved. Printed in USA.

1734 POINT™ I/O

In-Cabinet Modular I/O Platform

Benefits

Flexibility

- Connectivity to ControlNet, DeviceNet, EtherNet/IP and other open networks
- Linear, star, and ring EtherNet/IP network topology
- Individual, rack, and assembly-level connections
- Horizontal or vertical mounting without derating
- Safe and Standard I/O in the same chassis

Cost savings

- Modular design requires less enclosure space
- Up to 504 channels on a single network interface
- Removable terminations accelerate commissioning
- Remove and Insert Under Power (RIUP) reduces maintenance time
- Local autonomous control

Ease of use

- Fast, simple configuration and integration
- Full Add-on-Profiles in RSLogix 5000. No other software is needed.
- Channel-level diagnostics

Faster performance

- Multiple connection types
- Sense-to-actuate < 2 milliseconds

Self Configuring

- Greater flexibility
- Local control

POINT I/O is a family of modular I/O products ideal for applications requiring flexibility and low cost of ownership. With one to eight channel density modules, including a self-configuring discrete module, the modularity of POINT I/O minimizes system costs and size. The ability to mix standard and safe I/O provides even greater flexibility and opportunities for standardization, regardless of application requirements. Since it can be used in local and remote I/O, POINT I/O further reduces engineering costs in design, installation and application development.

As part of the Rockwell Automation Integrated Architecture, POINT I/O provides comprehensive channel-level diagnostics (wire off and short circuit), and configurable features, such as user-set filters and alarms, making it easy to use in your application.

POINT I/O is the only IP20-rated modular I/O solution compliant with ODVA requirements for linear, star, and ring EtherNet/IP architectures. This provides you with greater system reliability and availability, maximizing your uptime and system performance.

DeviceLogix™ technology embedded in POINT I/O creates a (POINTBus) control capability that processes discrete, analog, thermocouple and RTD inputs, providing high-speed localized control. Regardless of the application, POINT I/O brings the power of the Integrated Architecture to the field device in a small, easy-to-use package.

Adapter Products	
1734-AENT	24V DC EtherNet/IP Adapter
1734-AENTR	24V DC Dual Port Ethernet/IP Adapter
1734-ACNR	24V DC ControlNet Adapter
1734-ADN	24V DC DeviceNet Adapter
1734-ADNX	24V DC DeviceNet Adapter with Sub-net Expansion
1734-APB	24V DC PROFIBUS Adapter

Digital Output Products	
1734-OB8	24V DC 8 Output Source Module
1734-OB8E	24V DC 8 Point Output Module with Diagnostics
1734-OB4	24V DC 4 Output Source Module
1734-OB4E	24V DC 4 Point Output Module with Diagnostics
1734-OB2	24V DC 2 Output Source Module
1734-OB2E	24V DC 2 Point Output Module with Diagnostics
1734-OB2EP	24V DC Output Module with Diagnostics and Higher Current Output
1734-OV8E	24V DC 8 Output Sink Module with Diagnostics
1734-OV4E	24V DC 4 Output Sink Module with Diagnostics
1734-OV2E	24V DC 2 Output Sink Module with Diagnostics

Self-Configuring I/O Products	
1734-8CFG	8 Channel Self-Configuring Discrete I/O
1734-8CFGDLX	8 Channel Self-Configuring Discrete I/O Module with DeviceLogix

Digital Input Products	
1734-IB8	24V DC 8 Input Sink Module
1734-IB4	24V DC 4 Input Sink Module
1734-IB4D	24V DC 4 Point Input Module with Diagnostics
1734-IB2	24V DC 2 Input Sink Module
1734-IV8	24V DC 8 Input Source Module
1734-IV4	24V DC 4 Input Source Module
1734-IV2	24V DC 2 Input Source Module

Analog Products	
1734-IE2C	24V DC 2 Analog Current Input Module
1734-IE4C	24V DC 4 Analog Current Input Module
1734-IE8C	24V DC 8 Analog Current Input Module
1734-IE2V	24V DC 2 Analog Voltage Input Module
1734-OE2C	24V DC 2 Analog Current Output Module
1734-OE2V	24V DC 2 Analog Voltage Output Module
1734-OE4C	24V DC 4 Analog Current Output Module
1734-IR2	24V DC 2 Channel RTD Input Module
1734-IR2E	24V DC 2 High Resolution RTD Input Module
1734-IT2I	24V DC 2 Channel Thermocouple Input Module

AC and Relay Products	
1734-OW2	24V DC Coil 2 Point NO SPST Relay
1734-OW4	24V DC Coil 4 Point NO SPST Relay
1734-OX2	24V DC Coil 2 Point NO/NC DPST Relay
1734-IA2	120V AC 2 Point Input Module
1734-IA4	120V AC 4 Point Input Module
1734-IM2	220V AC 2 Point Input Module
1734-IM4	220V AC 4 Point Input Module
1734-OA2	120/230V AC 2 Point Output Module
1734-OA4	120/230V AC 4 Point Output Module

Speciality Products	
1734-232ASC	RS232 ASCII Interface Module
1734-485ASC	RS485/422 ASCII Interface Module
1734-VHSC24	24V DC VHSC w/ Source Output Module
1734-VHSC5	5V DC VHSC w/ Source Output Module
1734-IK	24V DC Incremental Encoder Module
1734-IJ	5V DC Incremental Encoder Module
1734-SSI	SSI Absolute Encoder Interface Module
1734-ARM	Address Reserve Module
1734-CTM	Common Terminal Module
1734-VTM	Voltage Terminal Module

Power Supply Products	
1734-EP24DC	24V DC Power Extension Module
1734-EPAC	AC Voltage Power Extension Module
1734-FPD	Power Isolation Module
1734-PDN	DeviceNet Interface Module

Terminal Bases & Accessories	
1734-TB	8 Point Terminal Base w/removal screw terminal
1734-TBS	8 Point Terminal Base w/removal spring terminal
1734-TB3	12 Point Terminal Base w/removal screw terminal
1734-TB3S	12 Point Terminal Base w/removal spring terminal
1734-TBCJC	Terminal Base w/removal cold-junction compensation terminal
1734-TOP	One-piece 8 Point Terminal Base w/screw terminal
1734-TOPS	One-piece 8 Point Terminal Base w/ spring terminal
1734-TOP3	One-piece 12 Point Terminal Base w/screw terminal
1734-TOP3S	One-piece 12 Point Terminal Base w/spring terminal
1734-EXT1	1m Bus Extension Cable
1734-EXT3	3m Bus Extension Cable

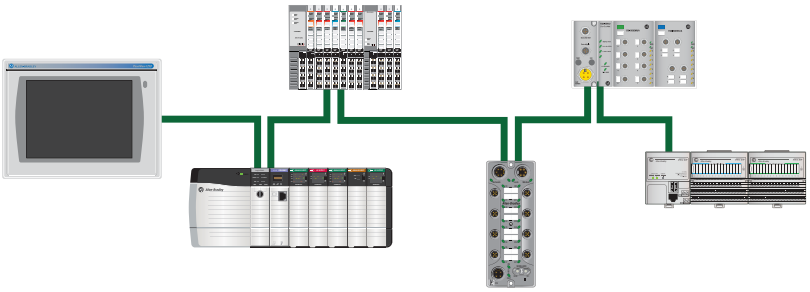

Dual Port Adapters enable Linear topology on EtherNet/IP, saving the costs of a centralized switch and additional cabling.

All trademarks and registered trademarks are property of their respective companies.

www.rockwellautomation.com

Power, Control and Information Solutions Headquarters

Americas: Rockwell Automation, 1201 South Second Street, Milwaukee, WI 53204 USA, Tel: (1) 414.382.2000, Fax: (1) 414.382.4444
Europe/Middle East/Africa: Rockwell Automation, Vorstlaan/Boulevard du Souverain 36, 1170 Brussels, Belgium, Tel: (32) 2 663 0600, Fax: (32) 2 663 0640
Asia Pacific: Rockwell Automation, Level 14, Core F, Cyberport 3, 100 Cyberport Road, Hong Kong, Tel: (852) 2887 4788, Fax: (852) 2508 1846

Publication 1734-PP001C-EN-P – April 2012
Supersedes Publication 1734-PP001B – October 2009

Copyright ©2012 Rockwell Automation, Inc. All Rights Reserved. Printed in USA.

Appendix 8

Century Link Proximity to Proposed Telemetry Sites

Mark Wharry

Subject: FW: EFID Telemetry Sites
Attachments: 21050303-EXH-Telemetry-Site-Summary-Table.docx; 20150427-IMG-Aerial-Telemetry-Sites.jpg; [Untitled].pdf

From: Pritchett, Dyrk A [mailto:Dyrk.A.Pritchett@centurylink.com]
Sent: Thursday, April 30, 2015 3:52 PM
To: Mark Wharry
Cc: Shelton, Jonah S; Crosswhite, Scott E; 'johnefid@hoodriverelectric.net'; Cook, Monte A
Subject: FW: EFID Telemetry Sites

Mark,
See untitled attachment. I have provided below **approximate distances and cost** to the nearest telephone service access point (pedestal or pole) for each of the requested telemetry sites.
Here are the State of Oregon PUC rules for telephone line extension charges:

Line extension within the public ROW:
First two-tenths (1,056ft) of a mile – No charge
Additional distance - $2.25ft

Line extension within private property:
CenturyLink provided trench or pole line first 100ft – No Charge
Additional distance - $2.25ft

Customer provided trench or pole – No charge

One time CenturyLink engineering charge of $170.00 for each service request location requiring Centurylink trenching or pole line.

HEADWORKS – Nearest telco 1,200ft at Smullin Dr. access point pedestal 032306-9012 IPID#2140. Follow HREC (Hood River Electric COOP) aerial power lead majority crossing private property.
No charge for 200ft of telco work in public ROW. No charge first 100ft in private.
Remaining 900ft X 2.25ft = $2,025.00 + $170.00 = **TOTAL $2,195.00**

SANDTRAP – Nearest telco 1,000ft at Hwy 35 access point pole 032300-8 IPID#1095. Bury along access road private property.
No charge first 100ft in private.
Remaining 900ft X 2.25ft = $2,025.00 + $170.00 = **TOTAL $2,195.00**

CHISTOPHER WATER BOX – Nearest telco 100ft at Pinemont Dr. & Hwy 35 intersection access point pedestal 060000-9063 IPID#4424. Bury to Pedestal within public ROW.
NO CHARGE

CENTRAL DISTRIBUTION TRAVELING SCREENS – Nearest telco 330ft at Hwy 35 access road access point pedestal 066000-9004 IPID#3978. Bury along access road private property.
No charge first 100ft in private.
Remaining 230ft X 2.25ft = $517.50 + $170.00 = **TOTAL $687.50**

DV CAMERON HILL WATER BOX – Nearest telco 1,500ft at Hwy 35 access point pedestal 066000-9002 IPID#15976. Follow HREC aerial power lead 594ft in public ROW. Bury 907ft along private access road.
No charge for 594ft in public ROW. No charge first 100ft in private.
Remaining 806ft X 2.25ft = $1,813.50 + $170.00 = **TOTAL $1,983.50**

DV LOWER WATER BOX – Nearest telco 200ft at Central Vale Rd. access point pedestal 070000-9051 IPID#3745. Bury to pedestal within public ROW.
NO CHARGE

CL WATER BOX 1 – Nearest telco 1,100ft at Furrow Rd. access point pedestal 040827-9002 IPID#4375. Bury along access road private property.
No charge first 100ft in private.
Remaining 1,000ft X 2.25ft = $2,250 + $170.00 = **TOTAL $2,420.00**

ES WATER BOX 4 – Nearest telco 100ft at Swyers Dr. access point pedestal 044503-9003 IPID#4557. Bury to pedestal within public ROW.
NO CHARGE

USGS GAGE STATION – Nearest telco 100ft at Hwy 35 & Toll Bridge Rd. intersection access point pole 032300-18 IPID#2594. Aerial span to pole within public ROW.
NO CHARGE

The above mentioned distances and costs are quoted as estimates and will need to be field verified after a service order is received to determine the actual billing cost. EFID will be responsible for securing any required utility easements needed for CenturyLink telco facilities to cross private property. CenturyLink will acquire any necessary public ROW permits. If EFID provides the trench or pole line it must meet NESC and Centurylink specifications. That includes placement of (1) 2" schedule 40 PVC conduit in the customer provided trench from the edge of the public ROW to the customer demarcation point with a minimum 18" depth with 12" separation (vertical/horizontal) from power if a joint trench. Pole heights must meet the required NESC attachment heights for ground clearance. EFID will provide an eye level attachment location for the telco demarcation box along with a ground attachment. Per Oregon PUC requirements each service order location must have an established address. **CenturyLink does have a joint use agreement in place to attach to HREC power poles which could possibly eliminate the need for trenching if a new aerial power lead is established.**

Please E-mail and/or call with any questions/concerns or to set up an on-site meeting.
Thanks,
Dyrk Pritchett
CenturyLink Engineer Hood River/Wasco/Clackamas County
541-387-9255

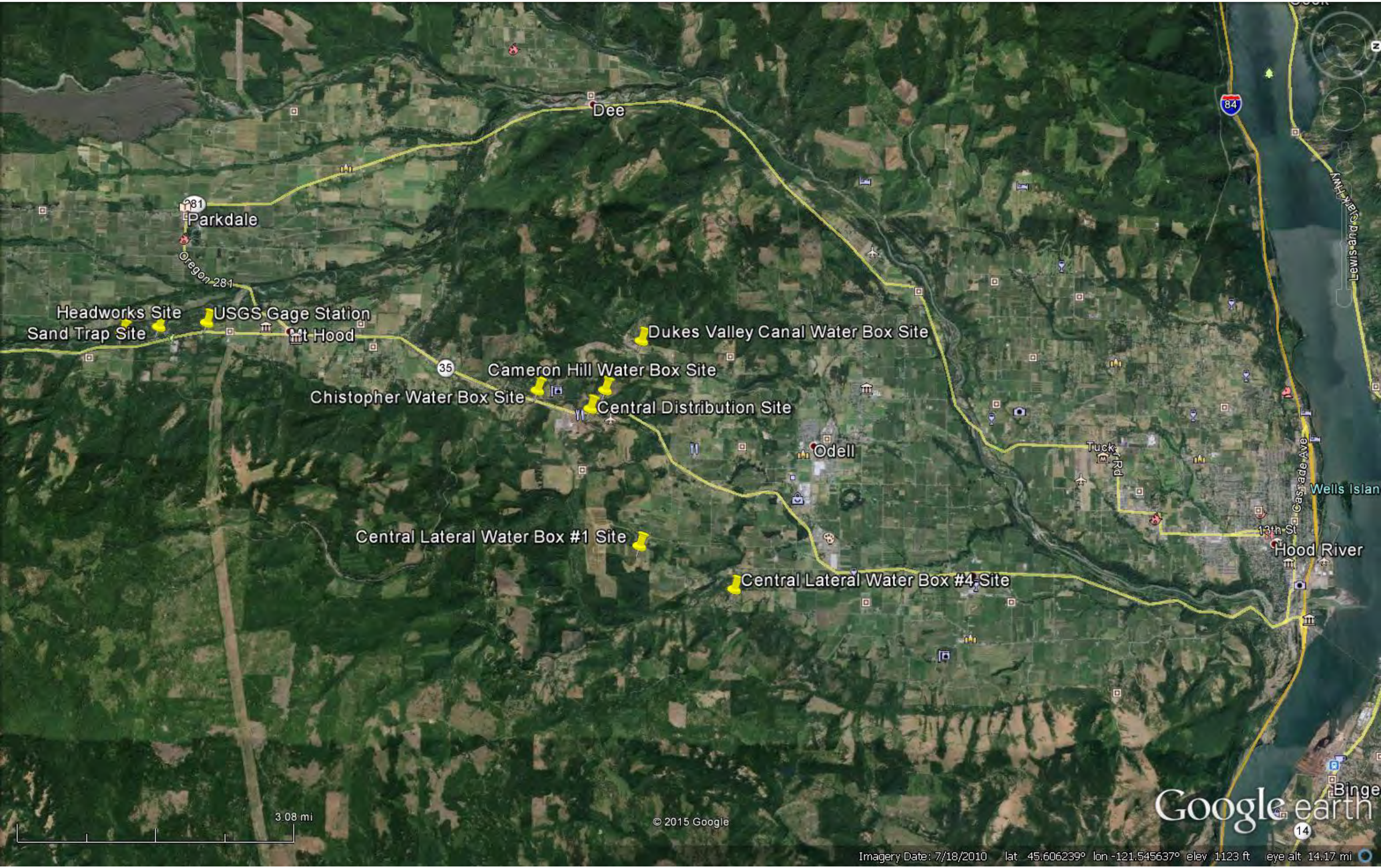
Dee
Parkdale
281
Oregon 281
Headworks Site
Sand Trap Site
USGS Gage Station
Mt Hood
Dukes Valley Canal Water Box Site
35
Cameron Hill Water Box Site
Chistopher Water Box Site
Central Distribution Site
Odell
Tucker Rd
84
Lewis and Clark Hwy
Cascade Ave
Wells Islan
13th St
Hood River
Central Lateral Water Box #1 Site
Central Lateral Water Box #4 Site
Binge
14
3.08 mi
© 2015 Google
Google earth
Imagery Date: 7/18/2010 lat 45.606239° lon -121.545637° elev 1123 ft eye alt 14.17 mi

Google earth

miles 400
km 600

HEADWORKS
TELCO 1,200'
SMULLIN DR.
PED 032306-9012
IPID # 2140
FOLLOW HREC
POWER LEAD
PARKDALE
EXCHANGE

SANDTRAP
TELCO 1,000'
HWY 35
POLE 032300-8
IPID # 1095
HREC POLE # B20
BURY ALONG
ACCESS ROAD
PARKDALE
EXCHANGE

CHISTOPHER
WATER
BOX
TELCO 100'
PINEMONT DR.
+
HWY 35
PED 060000-9063
IPID # 4424
BURY TO PED
ODELL EXCHANGE

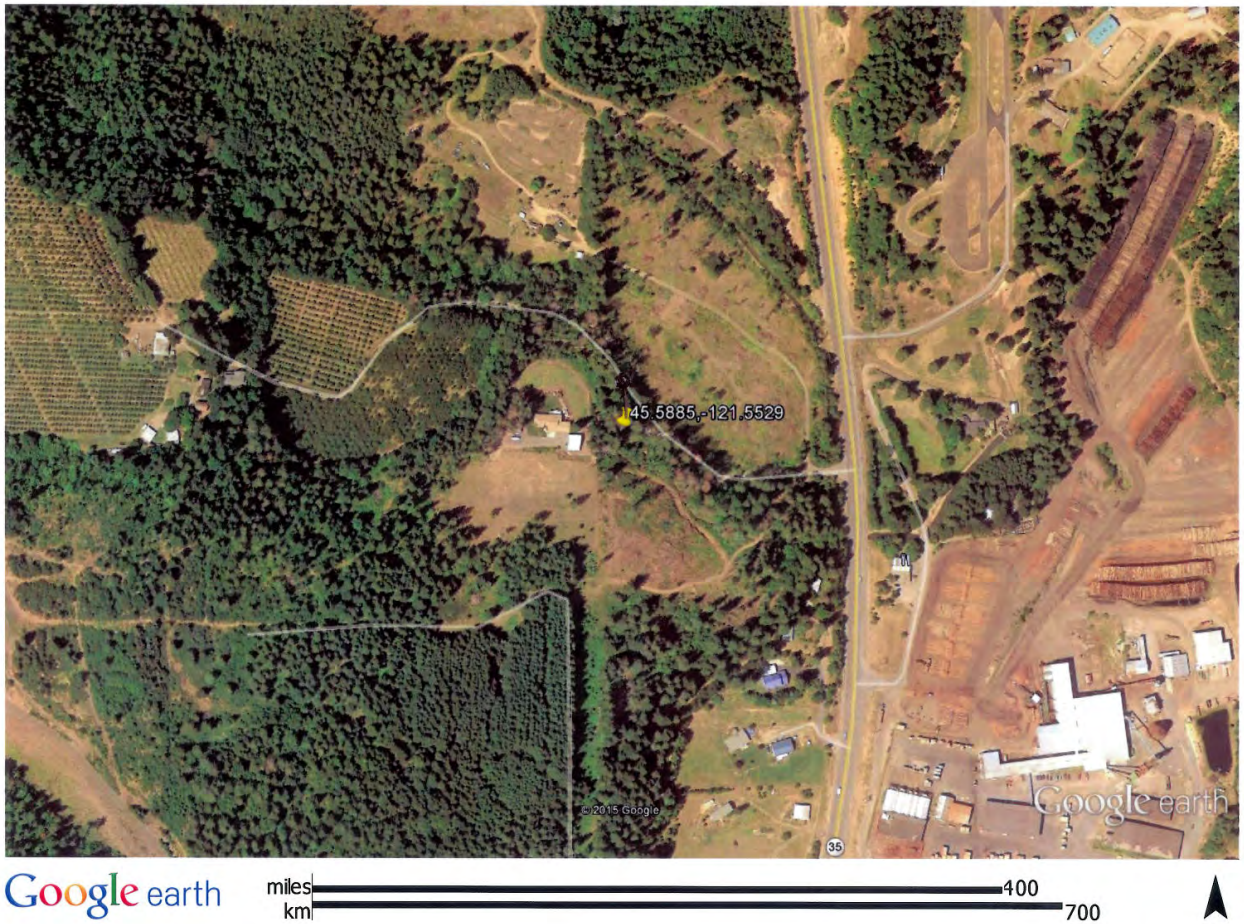

CENTRAL
DISTRIBUTION
TRAVELING
SCREENS
TELCO 330'
HWY 35 ACCESS RD.
PED 066000-9004
IPID # 3978
BURY TO PED
ODELL EXCHANGE

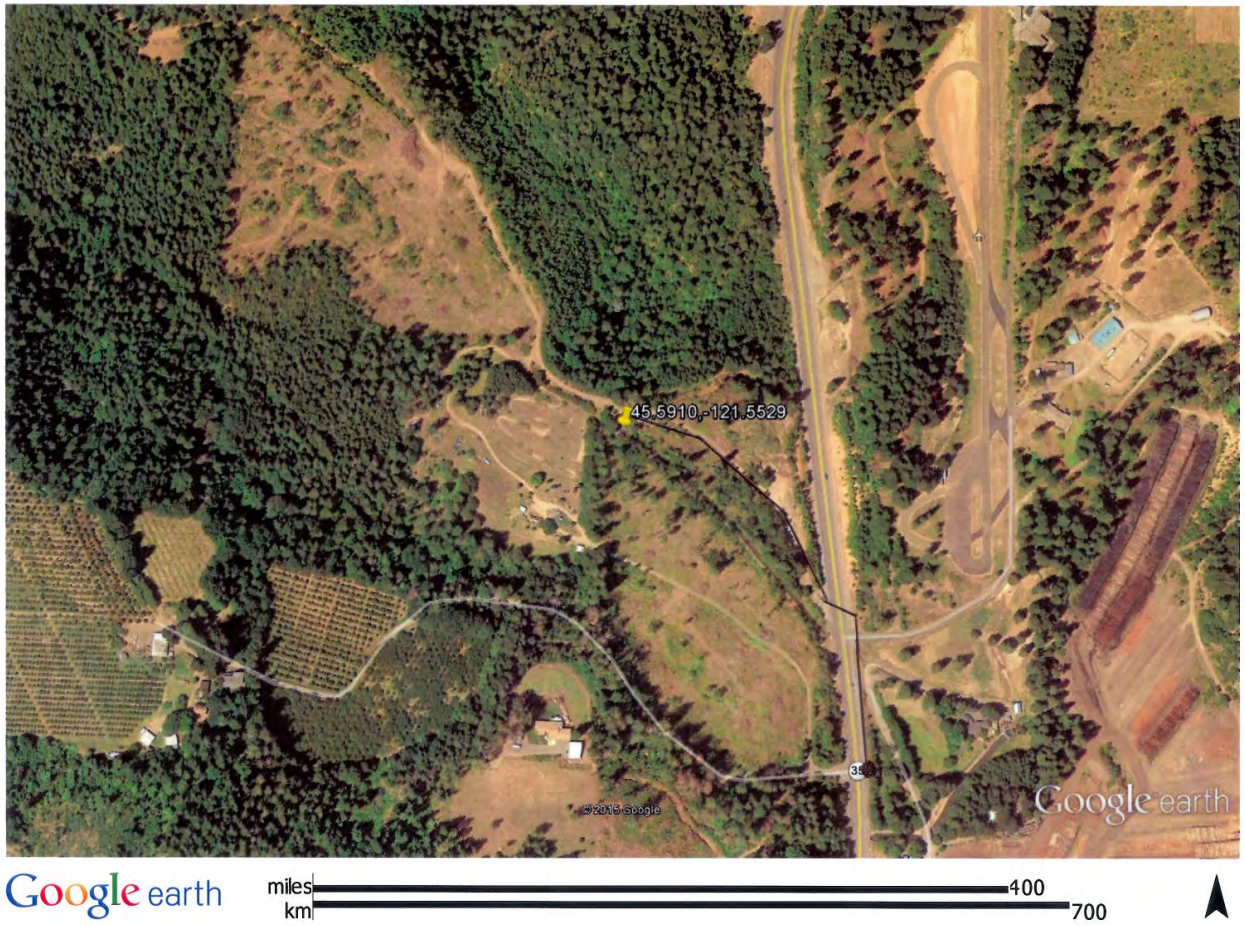

DV CAMERON
HILL WATER BOX
TELCO 1,500'
HWY 35
PED 066000-9002
IPID # 15976
594' AERIAL
ON HREC POLES
907' BURIED
ALONG ACCESS RD
ODELL EXCHANGE

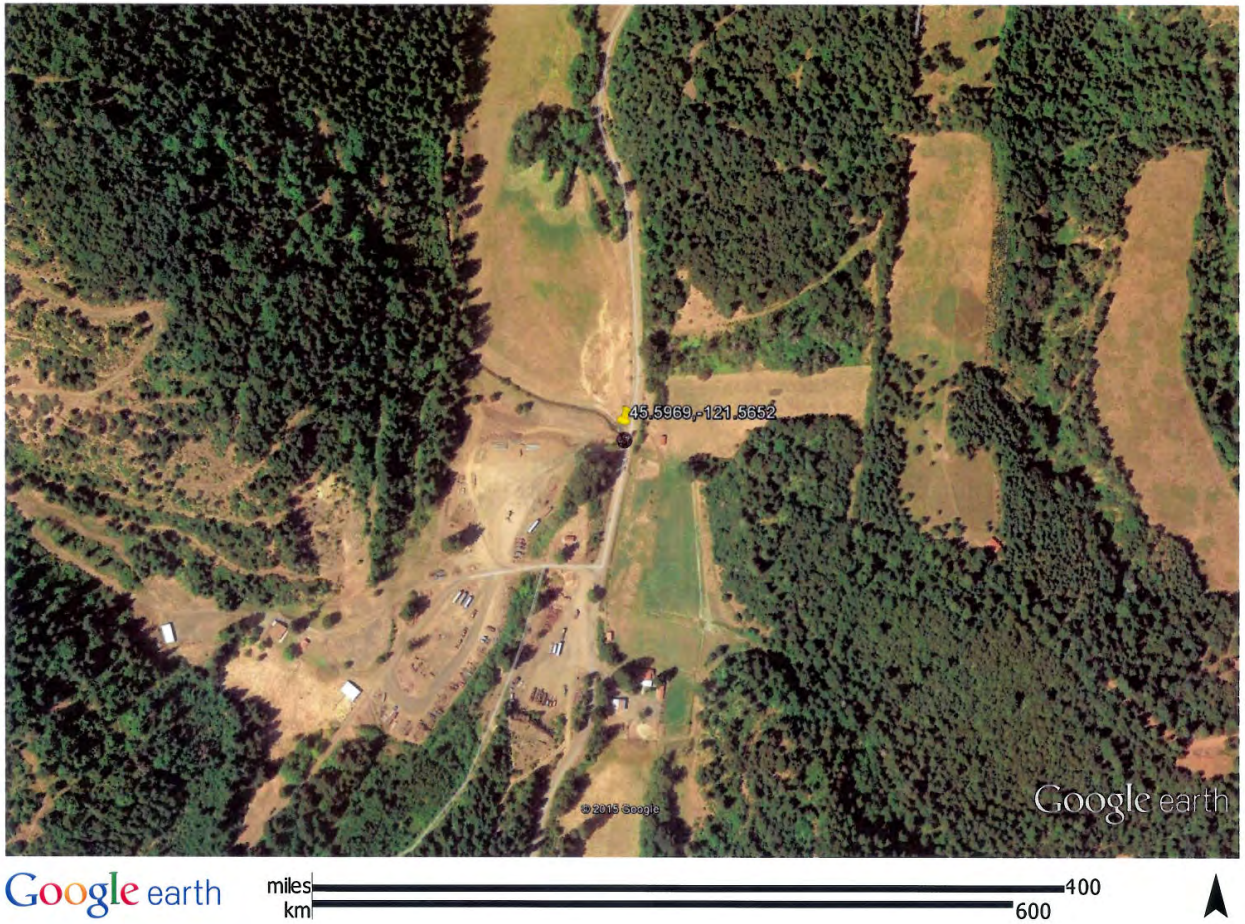

DV LOWER
WATER BOX
TELCO 200'
CENTRAL VALE RD.
PED 070000-9051
IPID # 3745
BURY 200'
TO PED
ODELL EXCHANGE

CL WATER
BOX 1
TELCO 1,100'
FURROW RD.
PED 040827-9002
IPID # 4375
BURY 1,100'
TO PED
ODELL EXCHANGE

Google earth miles 400 km 700

ES WATER
BOX 4

TELCO 100'
SWYERS DR.
PED 044503-9003
IPID # 4557
BURY 100'
TO PED

ODELL EXCHANGE

USGS GAGE
STATION
TELCO 100'
HWY 35
+
TOLL BRIDGE RD.
POLE 032300-18
IPID # 2594
AERIAL TO
POLE
PARKDALE EXCHANGE

Appendix 11

Vendor Data Sheets

PERFORMANCE PIPE
A DIVISION OF CHEVRON PHILLIPS CHEMICAL COMPANY LP

DRISCOPLEX® 4000/4100 Series Municipal and Industrial HDPE Pipe

DRISCOPLEX® HDPE Pipe is available to meet your needs in compliance with ASTM D3035/AWWA C901 or ASTM F714/AWWA C906 and NSF/ANSI 61 product standards. Factory Mutual FM1613 product standard is also available.

Produced from only the highest rated HDPE pipe material, DRISCOPLEX® 4000/4100 Series Pipe is manufactured from PE4710 resin as listed in PPI-TR4.

DRISCOPLEX® HDPE Pipe Advantages:

- ✓ Durable
- ✓ Leak Tight
- ✓ Excellent Flow
- ✓ Low Surge
- ✓ Fatigue Free
- ✓ Impact Resistant
- ✓ Trenchless Install
- ✓ Bend Radius
- ✓ Chemical Resistant
- ✓ UV Protection
- ✓ Flexibility
- ✓ Environmental

Optional Color Stripes to Identify the Application	
Color	Application
Blue	Potable Water
Green	Wastewater
Purple	Treated Effluent, Reclaimed Water
Red	Factory Mutual, Underground Fire Main
White – Gray – Brown	Customer Specified

Standard product is solid black with no stripes. IPS – 4 single stripes / DIPS – 3 sets of dual stripes.

NSF

© 2014 Chevron Phillips Chemical Company LP
Performance Pipe, a division of Chevron Phillips Chemical Company LP | 5085 W. Park Blvd | Suite 500 | Plano, TX 75093 | Phone: 800-527-0662 | Fax: 972-599-7329

PERFORMANCE PIPE
A DIVISION OF CHEVRON PHILLIPS CHEMICAL COMPANY LP

DRISCOPLEX® 4000/4100 Series PE Piping

DriscoPlex® Series Pipe Material Physical Properties		
Property	Standard	Typical Value†
Material Designation	ASTM F714	PE4710
Cell Classification	ASTM D3350	445574C (black)
Density [4]	ASTM D1505	0.960 g/cc (black)
Melt Index [4]	ASTM D1238	0.08 g/10 min
Flexural Modulus [5]	ASTM D790	>120,000 psi
Tensile Strength [5]	ASTM D638 Type IV	>3500 psi
SCG (PENT) [7]	ASTM F1473	>500 hours
HDB at 73°F (23°C) [4]	ASTM D2837	1600 psi
Color; UV stabilizer [C] [E]	ASTM D3350	Black Color with UV Stabilizer

This is not a product specification and does not guarantee or establish specific minimum or maximum values or manufacturing tolerance for material or piping products to be supplied. Values obtained from tests of specimens taken from piping product may vary from these typical values.

Additional Sizes and DR available. Contact Performance Pipe or visit www.performancepipe.com

Selected Dimension Ratios for DriscoPlex® 4000 DIPS Pipe (Additional Sizes and DR's available. Contact Performance Pipe)

DIPS		DR 17			DR 11		
ASTM F714 PR		PR = 125 psi			PR = 200 psi		
AWWA C906 PC		PC = 100 psi			PC = 160 psi		
Pipe Size, in.	OD, in.	Min Wall in.	Avg. ID in.	Wgt. lbs/ft	Min Wall in.	Avg. ID in.	Wgt. lbs/ft
4	4.80	0.282	4.201	1.76	0.436	3.876	2.62
6	6.90	0.406	6.040	3.64	0.627	5.571	5.42
8	9.05	0.532	7.921	6.26	0.823	7.305	9.33
10	11.10	0.653	9.716	9.42	1.009	8.961	14.03
12	13.20	0.776	11.554	13.32	1.200	10.656	19.84
14	15.30	0.900	13.392	17.89	1.391	12.351	26.65
16	17.40	1.024	15.230	23.14	1.582	14.046	34.47
18	19.50	1.147	17.068	29.07	1.773	15.741	43.30
20	21.60	1.271	18.906	35.66	1.964	17.436	53.13
24	25.80	1.518	22.583	50.88	2.345	20.829	75.77
30	32.00	1.882	28.009	78.28	2.909	25.833	116.58
36	38.30	2.253	33.524	112.13	3.482	30.918	167.02
42	44.50	2.618	38.951	151.37			

Selected Dimension Ratios for DriscoPlex® 4100 IPS Pipe (Additional Sizes and DR's available. Contact Performance Pipe)

IPS		DR 17			DR 11		
ASTM F714 PR		PR = 125 psi			PR = 200 psi		
AWWA C906 PC		PC = 100 psi			PC = 160 psi		
Pipe Size, in.	OD, in.	Min Wall in.	Avg. ID in.	Wgt. lbs/ft	Min Wall in.	Avg. ID in.	Wgt. lbs/ft
2	2.375	0.140	2.078	0.43	0.216	1.917	0.64
3	3.50	0.206	3.063	0.94	0.318	2.826	1.39
4	4.50	0.265	3.938	1.55	0.409	3.633	2.31
6	6.63	0.390	5.798	3.36	0.602	5.349	5.00
8	8.63	0.507	7.550	5.69	0.784	6.963	8.47
10	10.75	0.632	9.410	8.83	0.977	8.679	13.16
12	12.75	0.750	11.160	12.43	1.159	10.293	18.51
14	14.00	0.824	12.253	14.98	1.273	11.301	22.32
16	16.00	0.941	14.005	19.57	1.455	12.915	29.15
18	18.00	1.059	15.755	24.77	1.636	14.532	36.89
20	20.00	1.176	17.507	30.58	1.818	16.146	45.54
22	22.00	1.294	19.257	37.00	2.000	17.760	55.10
24	24.00	1.412	21.007	44.03	2.182	19.374	65.58
26	26.00	1.529	22.759	51.67	2.364	20.988	76.96
28	28.00	1.647	24.508	59.93	2.545	22.605	89.26
30	30.00	1.765	26.258	68.80	2.727	24.219	102.47
32	32.00	1.882	28.010	78.28	2.909	25.833	116.58
34	34.00	2.000	29.760	88.37	3.091	27.447	131.61
36	36.00	2.118	31.510	99.07	3.273	29.061	147.55
42	42.00	2.471	36.761	134.84	3.818	33.905	200.84
48	48.00	2.824	42.013	176.12			
54	54.00	3.176	47.266	222.90			

This product flyer is intended for reference purposes. It should not be used in place of the advice from a licensed Professional Engineer. Pressure Ratings and Pressure Class are based on operating temperature up to 80°F. Pressure class is based on a 0.5 Design Factor for water application from AWWA while Pressure Rating is based on a 0.63 Design Factor per PPI TR-41. Average inside diameter is calculated using Nominal OD and Minimum Wall plus 6% for use in estimating fluid flow. Actual ID will vary. When designing components to fit the pipe ID, refer to pipe dimensions and tolerances in the applicable pipe manufacturing specification. Additional information available at www.performancepipe.com

© 2014 Chevron Phillips Chemical Company LP
Performance Pipe, a division of Chevron Phillips Chemical Company LP | 5085 W. Park Blvd | Suite 500 | Plano, TX 75093 | Phone: 800-527-0662 | Fax: 972-599-7329

BIG BLUE™

PVC C.I.O.D. Transmission Pipe
DR 51/DR 41/DR 32.5/DR 25/DR 21/DR 18

Pressure Rated 80, 100, 125, 165, 200 & 235 psi
Ring-Tite™ Joints 14"-48"

SURGE DESIGN

SURGE PRESSURES IN VARIOUS PRESSURE PIPE

It is important to note that for the same conditions of interrupted flow, the surge pressures generated in pipe with high tensile moduli will be greater than the surges in low moduli (PVC) pipe of similar dimensions.

As the modulus of tensile elasticity for a piping material increases, the resultant pressure surge, or "water-hammer", caused by a change in flow velocity also increases. For example, an instantaneous 2 fps (0.6 mps) flow velocity change in an 18" water main will create surge pressures as shown in **Table 1** for different pipe materials. For all system designs, surge pressures should be examined with the pipe material in use.

TABLE 1

PRESSURE SURGES IN 18 IN. WATER MAIN

In Response to 2 fps (0.6 mps) Instantaneous Flow Velocity Change.

PIPE PRODUCT	PRESSURE SURGE	
	psi	kPa
Class 50 DI Pipe	100.0	689
Class 150 AC Pipe	88.7	611
165 psi (DR 25) PVC Pipe	29.4	202

Pressure surges in PVC pipe of different dimension ratios in response to a 1 fps (0.3 mps) instantaneous flow velocity change are shown in **Table 2.**

TABLE 2

DESIGN TABLE FOR PVC PIPE-PRESSURE SURGE VS. DIMENSION RATIO

In Response to 1 fps (0.3 mps) Instantaneous Flow Velocity Change.

DIMENSION RATIO	PRESSURE SURGE	
	psi	kPa
13.5	20.2	139
14	19.8	137
17	17.9	123
18	17.4	120
21	16.0	110
25	14.7	101
26	14.4	99
32.5	12.8	88
41	11.4	79
51	10.8	74

TESTING REQUIREMENTS FOR AWWA C905

TEST	AWWA C905				
	80 psi	100 psi	125 psi	165 psi	235 psi
SHORT TERM BURST TEST (psi) less than 30"	255	315	400	535	755
EXTRUSION QUALITY OF PVC PIPE BY ACETONE IMMERSION TEST METHOD ASTM D2152	20 min	20 min	20 min	20 min	20 min
FLATTENING TEST Tests extrusion quality and ductility under slow loading conditions (Flattening Capability)	40% of OD between the plates within 2-5 min	40% of OD between the plates within 2-5 min	40% of OD between the plates within 2-5 min	40% of OD between the plates within 2-5 min	40% of OD between the plates within 2-5 min
HYDROSTATIC PROOF TEST (each piece) (psi)	160	200	250	330	470

TYPICAL PHYSICAL AND CHEMICAL PROPERTIES AND CAPACITIES

PROPERTY	AWWA C905 BIG BLUE™ PVC PIPE	ASTM TEST METHOD
Hoop Stress at 73 F Minimum Short Term Bursting Strength (psi)	6400	D1599
Working Pressure Rating 73 F (% of rating at 73 F) 80 F (% of rating at 73 F) 100 F (% of rating at 73 F)	100% 88% 62%	—
Chemical Resistance at 73 F Acids Salts-Bases Aliphatic Hydrocarbons (including crude oil)	Excellent Excellent Good	—
Physical Properties of Compound Std. Test Specimens Minimum Tensile Strength (psi) at 73 F	7000	D638
Thermal Expansion (in/100ft/50 F Change)	2"	—
Fire Resistance	Self Extinguishing	—
Flame Spread	10	E162
Smoke Development	330	E84
Coefficient of Flow Hazen & Williams	C=150	—
Mannings N Value	N=0.009	—

QUALITY • PERFORMANCE • LONGEVITY
50-YEAR WARRANTY on JM Eagle Plastic Pipe
GUARANTEED

DIMENSIONS AND WEIGHTS

SUBMITTAL AND DATA SHEET

PIPE SIZE (IN)	AVERAGE O.D. (IN)	NOM. I.D. (IN)	MIN. T. (IN)	MIN. E (IN)	APPROX. D[9] (IN)	APPROX. WEIGHT (LBS/FT)
Rated 235 psi (DR 18)						
14	15.30	13.50	0.850	8.00	19.00	26.75
16	17.40	15.35	0.967	9.25	21.62	34.86
18	19.50	17.20	1.083	13.00	24.22	48.95
20	21.60	19.06	1.200	14.50	26.85	54.22
24	25.80	22.76	1.433	12.00	32.06	77.97
30	32.00	28.23	1.778	16.75	37.81	117.82
Rated 200 psi (DR 21)*						
14	15.30	13.75	0.729	8.00	18.22	23.07
16	17.40	15.64	0.829	9.25	20.72	30.04
18	19.50	17.53	0.929	13.00	23.22	37.27
20	21.60	19.42	1.029	14.50	25.72	46.71
24	25.80	23.19	1.229	12.00	30.72	67.53
30	32.00	28.77	1.524	16.75	38.10	103.71
36	38.30	34.43	1.824	19.02	45.60	152.16
Rated 165 psi (DR 25)						
14	15.30	14.00	0.612	8.00	17.94	19.48
16	17.40	15.92	0.696	9.25	20.41	25.38
18	19.50	17.85	0.780	13.00	22.87	31.99
20	21.60	19.77	0.864	14.50	25.34	39.46
24	25.80	23.61	1.032	12.00	30.27	56.98
30	32.00	29.29	1.280	16.75	37.12	88.49
36	38.30	35.05	1.532	19.02	44.43	128.41
42	44.50	40.73	1.780	22.43	51.62	176.02
48*	50.80	46.49	2.032	24.78	58.93	231.22
Rated 125 psi (DR 32.5)*						
14	15.30	14.30	0.471	8.00	17.48	15.14
16	17.40	16.27	0.535	9.25	19.88	19.63
18	19.50	18.23	0.600	13.00	23.30	24.75
20	21.60	20.19	0.665	14.50	24.38	30.54
24	25.80	24.12	0.794	12.00	29.47	44.11
30	32.00	29.91	0.985	16.75	35.94	68.45
36	38.30	35.80	1.178	19.02	43.01	99.22
42	44.50	41.60	1.369	22.43	49.98	135.49
48	50.80	47.49	1.563	24.78	56.73	178.49

PIPE SIZE (IN)	AVERAGE O.D. (IN)	NOM. I.D. (IN)	MIN. T. (IN)	MIN. E (IN)	APPROX. D[9] (IN)	APPROX. WEIGHT (LBS/FT)
Rated 100 psi (DR 41)						
14	15.30	14.52	0.373	8.00	16.07	12.01
16	17.40	16.51	0.424	9.25	18.28	15.63
18	19.50	18.50	0.476	13.00	20.49	19.72
20	21.60	20.49	0.527	14.50	22.70	24.31
24	25.80	24.48	0.629	12.00	27.11	35.10
30	32.00	30.35	0.780	16.75	35.12	54.65
36	38.30	36.30	0.934	19.02	42.04	78.97
42	44.50	42.18	1.085	22.43	48.84	108.19
48	50.80	48.14	1.239	24.78	55.76	142.10
Rated 80 psi (DR 51)**						
18	19.50	18.69	0.382	11.09	20.30	15.92
24	25.80	24.72	0.506	14.90	26.86	28.39
30	32.00	30.67	0.627	16.75	34.50	44.08
36	38.30	36.71	0.751	19.02	41.30	64.32
42	44.50	42.65	0.872	22.43	47.99	88.10
48	50.80	48.69	0.996	24.78	54.78	115.79

* Prior to ordering or specifying, please consult JM Eagle™ for product and/or listing availablity.
** UL 1285 up to 24"

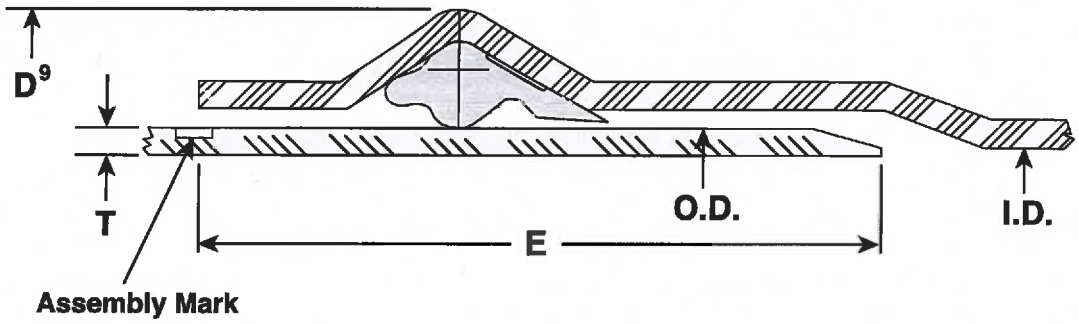

I.D. : Inside Diameter

O.D. : Outside Diameter

T. : Wall Thickness

D9: Bell Outside Diameter

E: Distance between Assembly Mark to the end of spigot.

SS-250 SERIES STAINLESS STEEL SLIDE GATE

- **THE BEST OF TECHNOLOGY FOR STRENGTH AND LONGEVITY IN CORROSIVE ATMOSPHERES**
- **304 OR 316 STAINLESS STEEL WITH UHMW PLASTIC SLIDING AND SEATING SURFACES**
- **LEAKAGE IS GUARANTEED TO NO MORE THAN 0.05 GPM/FT OF SEAL PERIMETER, WHICH IS ½ THAT ALLOWED BY AWWA STANDARDS**

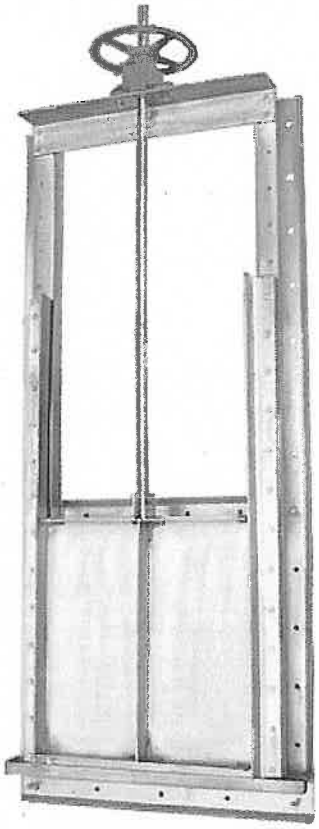

SS-251-1
(shown)

ADVANTAGES AND PERFORMANCE

- Corrosion Resistant
- Optimum Sealing Against Leakage
- Rugged Heavy Duty Design
- Low Maintenance

SS-250 Series Slide Gates are engineered for excellent sealing while providing maximum resistance to corrosion. Ultra High Molecular Weight Polyethylene (UHMW) sliding and seating surfaces, dissimilar from the gate slide material, provides low coefficient of friction while maintaining the superior resistance to corrosion. SS-250 Series gates may be specified with optional type 316L stainless steel for use in unusually corrosive environments such as hydrogen sulfides or salt water.

SS-250 Series Slide Gates are designed to maintain leakage at ½ that allowed by AWWA. SS-250 gates are available in normal aperture configurations, channel (embedded or bolted) as well as weirs (downward opening). They may also be ordered as self-contained gates or with extension stems and separate operators. SS-250 Gates are custom designed to meet seating and unseating heads per application, incorporating safety factors per AWWA standards.

SS-250 Gates can also be designed to incorporate integral with the frame. SS-250 Gate frames may be embedded in channel walls, mounted to a wall with anchor bolts, mounted to pipe flange, or wall thimble (Waterman offers a complete line of wall thimbles, including "F", "E", Spigot-Style, as well as custom thimbles).

Also available: A-250 Series Aluminum Slide Gates.

SS-250 STAINLESS STEEL SLIDE GATE CONFIGURATIONS							
TYPE OF GATE	APERTURE		END OF CHANNEL			IN CHANNEL	
(OPENING)	STANDARD	DOWNWARD OPENING	UPWARD OPENING	DOWNWARD OPENING (WEIR)	Non Restricted Flow	EMBEDDED GUIDE	WALL MTD. GUIDE
RISING STEM	251	252	253	254	255	256	257
MACHINED FLANGE	251-F	252-F					
CIRCULAR FLANGE	251-CF	252-CF					
FULLY CONTAINED SLIDE IN GUIDE RAIL	251-L	252-L	253-L	254-L	255-L	256-L	257-L
SELF-CONTAINED GATE	251-Y	252-Y	253-Y	254-Y	255-Y	256-Y	257-Y
NRS Cover	251-N	252-N	253-N	254-N	255-N	256-N	257-N
SPECIAL OR MODIFIED APPLICATION	251-X	252-X	253-X	254-X	255-X	256-X	257-X

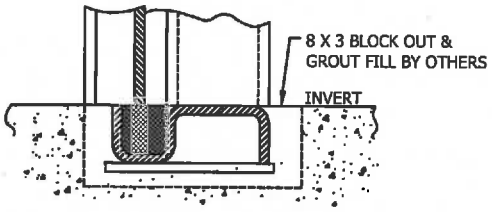

ALTERNATE "Q" BOTTOM

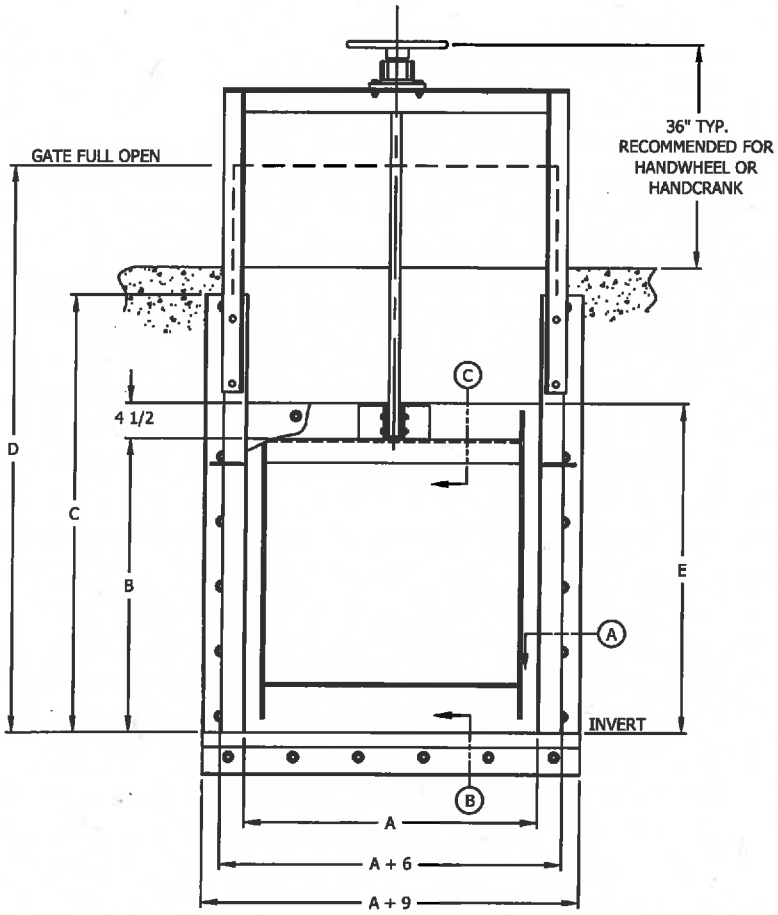

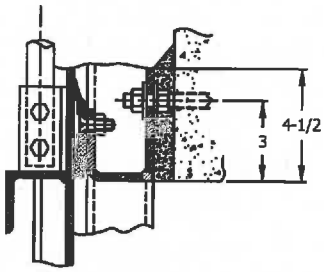

SECTION C

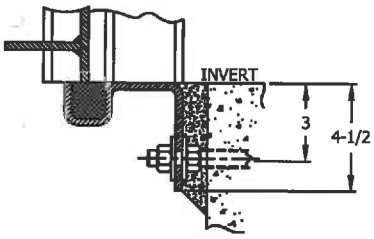

SECTION B

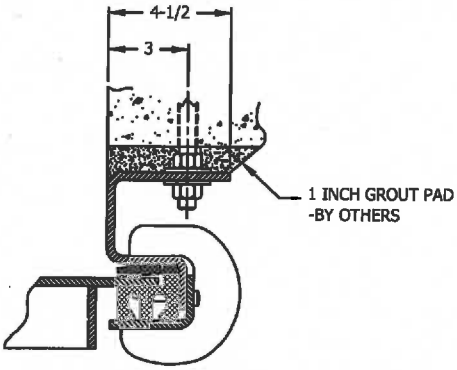

SECTION A

A = GATE OPENING WIDTH
B = GATE OPENING HEIGHT
C = GUIDE RAIL HEIGHT = B + 1/2 OF SLIDE
D = GATE FULL OPEN = 2B + 4-1/2
E = SLIDE HEIGHT = B + 4-1/2

Waterman® INDUSTRIES

SS-251-0
SLIDE GATE

REUSE OF DOCUMENTS: THIS DOCUMENT AND THE IDEAS AND DESIGNS INCORPORATED HEREIN, AS AN INSTRUMENT OF PROFESSIONAL SERVICE, IS THE PROPERTY OF WATERMAN INDUSTRIES AND IS NOT TO BE USED, IN WHOLE OR IN PART, FOR ANY OTHER PROJECT WITHOUT THE WRITTEN AUTHORIZATION OF WATERMAN INDUSTRIES©

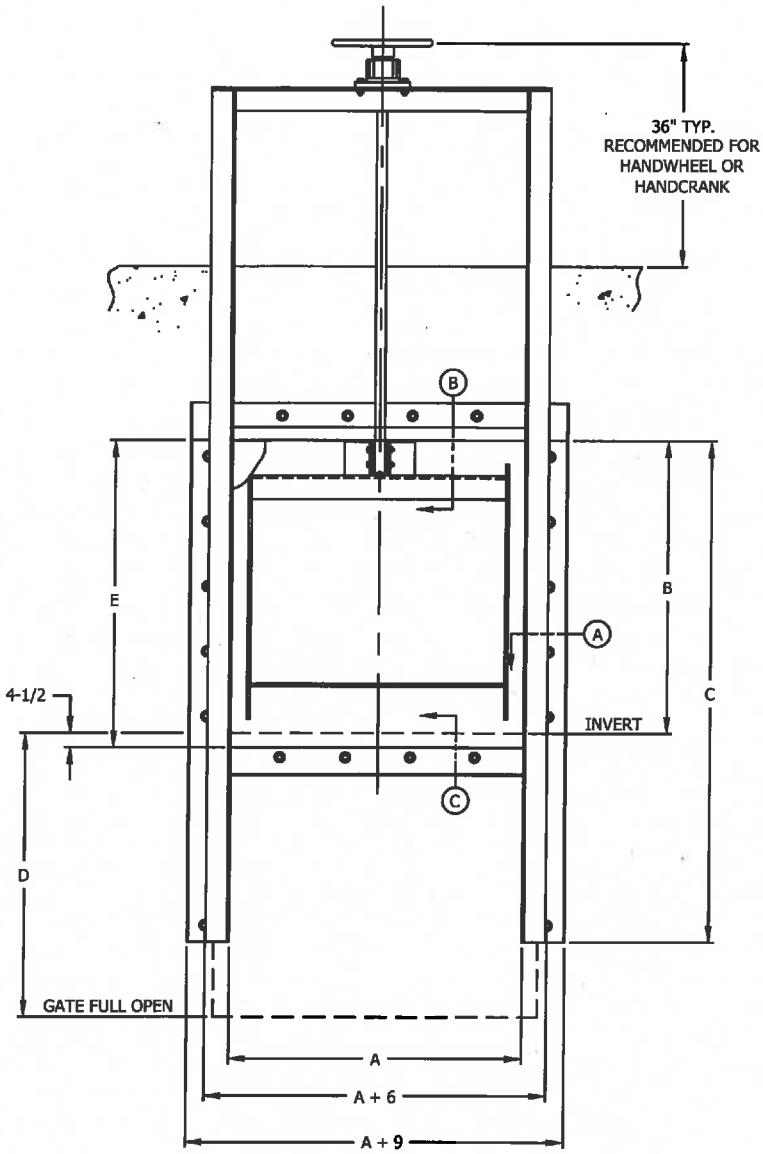

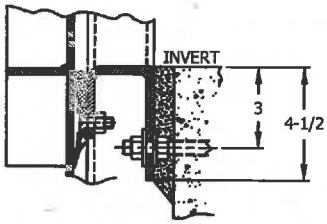

SECTION C

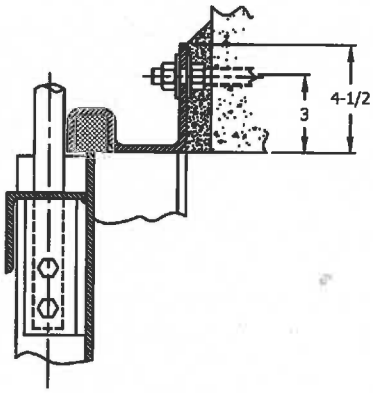

SECTION B

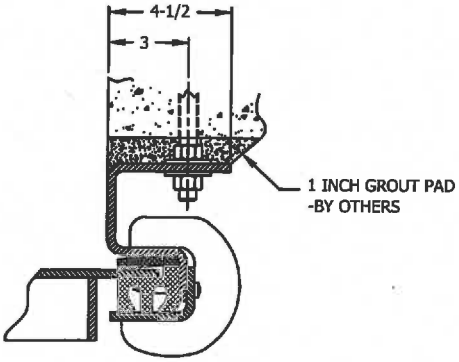

SECTION A

A = GATE OPENING WIDTH
B = GATE OPENING HEIGHT
C = GUIDE RAIL HEIGHT = B + 1/2 OF SLIDE
D = GATE FULL OPEN = B + 4-1/2
E = SLIDE HEIGHT = B + 4-1/2

Waterman® INDUSTRIES

SS-252-0
SLIDE GATE

REUSE OF DOCUMENTS: THIS DOCUMENT AND THE IDEAS AND DESIGNS INCORPORATED HEREIN, AS AN INSTRUMENT OF PROFESSIONAL SERVICE, IS THE PROPERTY OF WATERMAN INDUSTRIES AND IS NOT TO BE USED, IN WHOLE OR IN PART, FOR ANY OTHER PROJECT WITHOUT THE WRITTEN AUTHORIZATION OF WATERMAN INDUSTRIES©

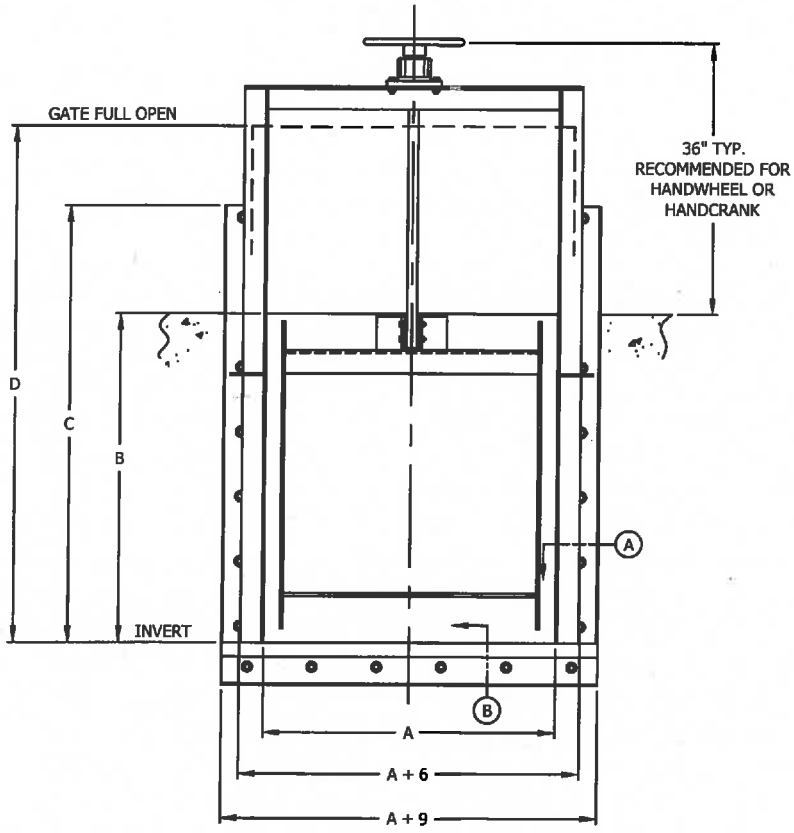

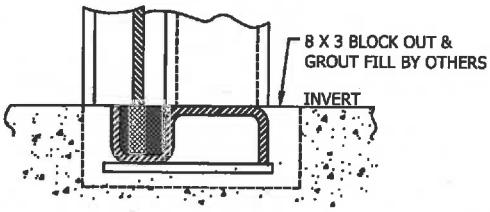

ALTERNATE "Q" BOTTOM

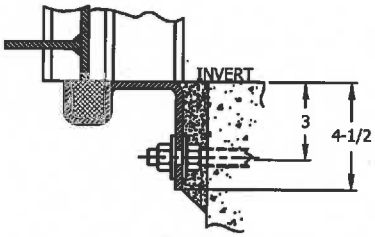

SECTION (B)

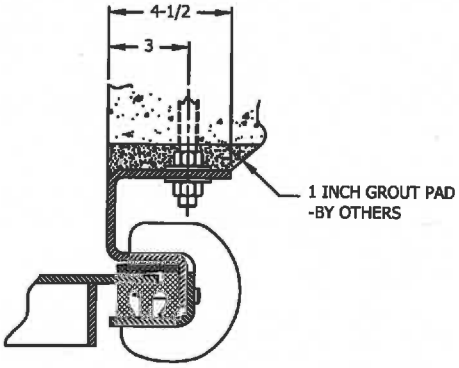

SECTION (A)

A = GATE OPENING WIDTH
B = GATE OPENING HEIGHT
C = GUIDE RAIL HEIGHT = B + 1/2 OF SLIDE
D = GATE FULL OPEN = 2B
E = SLIDE HEIGHT = B

Waterman® INDUSTRIES

SS-253-0
SLIDE GATE

REUSE OF DOCUMENTS: THIS DOCUMENT AND THE IDEAS AND DESIGNS INCORPORATED HEREIN, AS AN INSTRUMENT OF PROFESSIONAL SERVICE, IS THE PROPERTY OF WATERMAN INDUSTRIES AND IS NOT TO BE USED, IN WHOLE OR IN PART, FOR ANY OTHER PROJECT WITHOUT THE WRITTEN AUTHORIZATION OF WATERMAN INDUSTRIES©

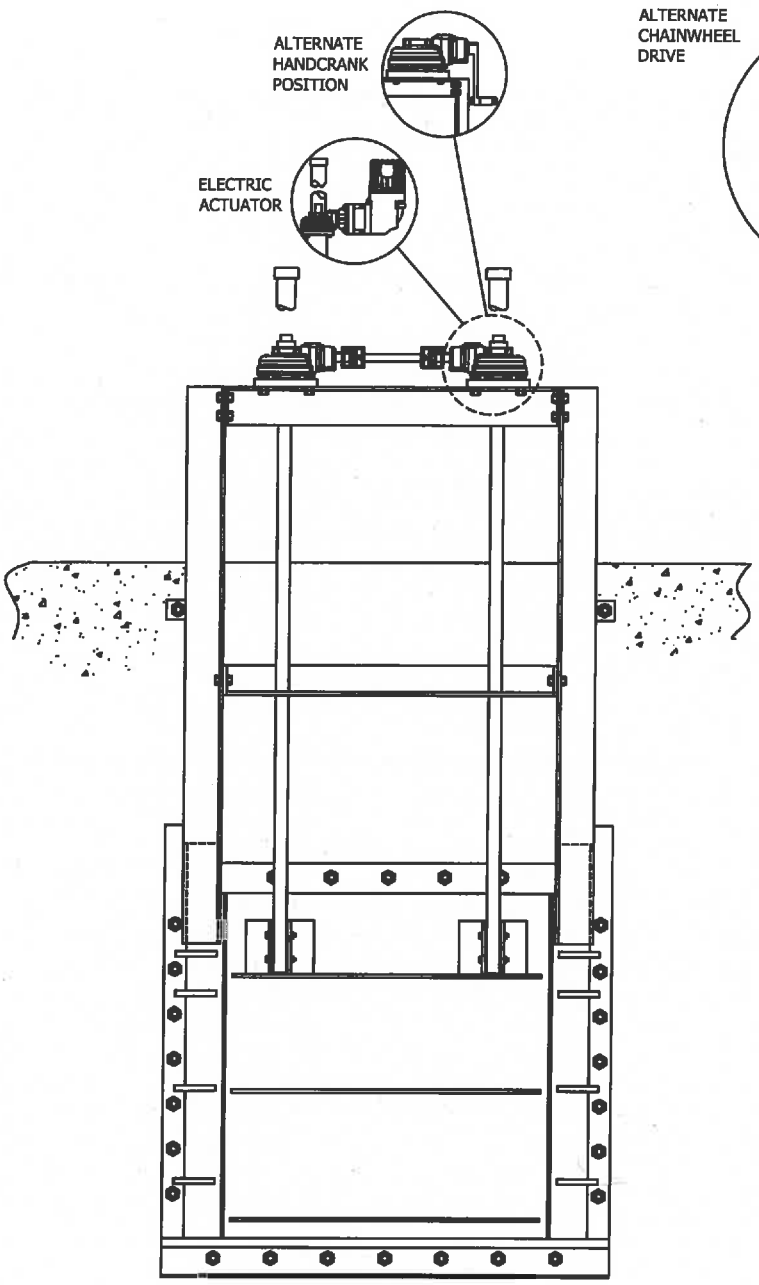

TANDEM LIFTS
WITH DUAL STEMS

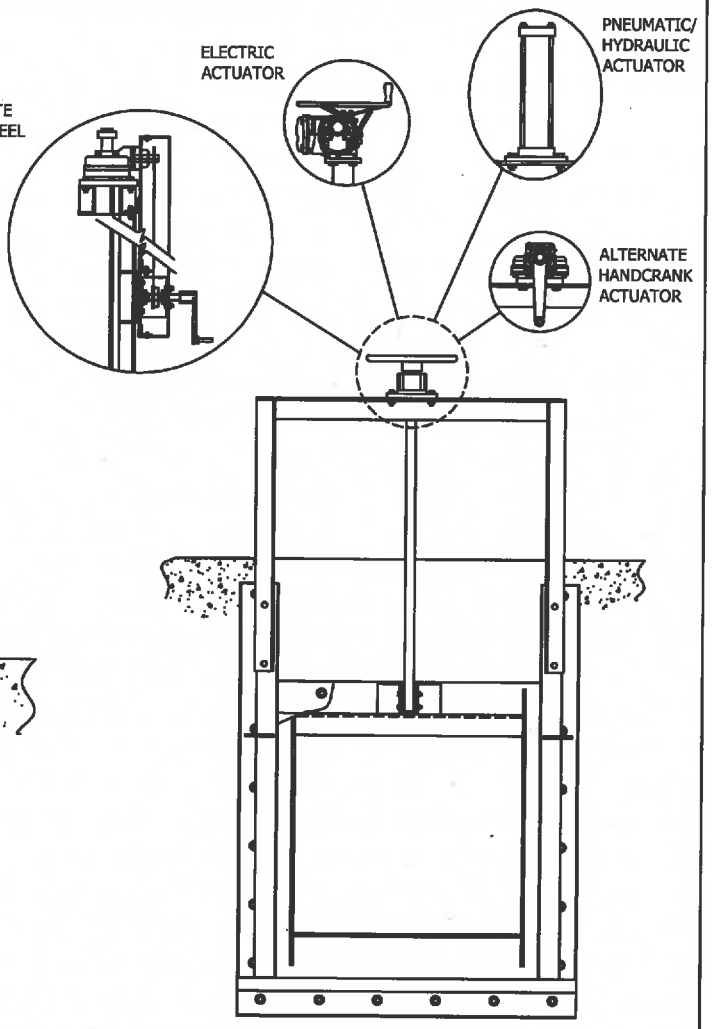

SINGLE LIFT & STEM

Waterman® INDUSTRIES

ACTUATORS
SELF CONTAINED
SLIDE GATES

REUSE OF DOCUMENTS: THIS DOCUMENT AND THE IDEAS AND DESIGNS INCORPORATED HEREIN, AS AN INSTRUMENT OF PROFESSIONAL SERVICE, IS THE PROPERTY OF WATERMAN INDUSTRIES AND IS NOT TO BE USED, IN WHOLE OR IN PART, FOR ANY OTHER PROJECT WITHOUT THE WRITTEN AUTHORIZATION OF WATERMAN INDUSTRIES©

HEAVY DUTY, CAST IRON

SERIES 5000 AND 7000 SLUICE GATES

GENERAL DESCRIPTION

Waterman Series 7000, 5000, 4000 and P-32 Heavy Duty Sluice Gates are designed and manufactured to meet or exceed AWWA Specifications C-501 (latest revision).

USES

Waterman Heavy Duty Sluice Gates have been successfully used in a wide variety of applications, including municipal water works and treatment facilities, flood control projects, reservoirs and fish hatcheries.

FEATURES

Gate shapes include square or rectangular with square, rectangular or circular opening, and can be furnished with standard flangeback or extended flangeback frames.
All units feature adjustable corrosion-resistant side wedges and corrosion-resistant malleable seat facings locked in dovetail grooves. All mating or sliding surfaces are fully machined including close tolerance tongue and groove guides. All assembly hardware is of corrosion-resistant material.

OPTIONAL FEATURES

Optional features available include Non-Rising Stem Adaptors, Flush Bottom Closures, Downward Opening Units, Top and Bottom Corrosion Resistant Adjustable Wedges, and fully Self-Contained Gates with extended guide rails, cast iron yoke, stem and lift.

SEATING AND UNSEATING HEADS

The basic design of these gates provides adequate safety with good sealing characteristics for seating and unseating heads as follows:

SERIES	Seating Heads, Feet (1)	Unseating Heads, Feet (2)
5000	55 to 200 (varies with size)	10 to 150 or higher (varies with size)
7000		

(1) Heads are measured from the horizontal center line of the gate opening to the surface of the water. With SEATING HEADS (or face pressure), the water is on the front of the gate and helps to press the seating surfaces together.

(2) With UNSEATING HEADS, the water is on the back of the gate and tends to push the slide away from the frame. Top and bottom wedges are usually necessary to overcome this back pressure. Structures for sluice gates should be designed so that the gate is subject to seating pressure whenever possible. For unseating heads top and bottom wedges are used on all gates having a width of 24" or more, except that gates with flush bottom seats have top wedges only.

Continued on next page.

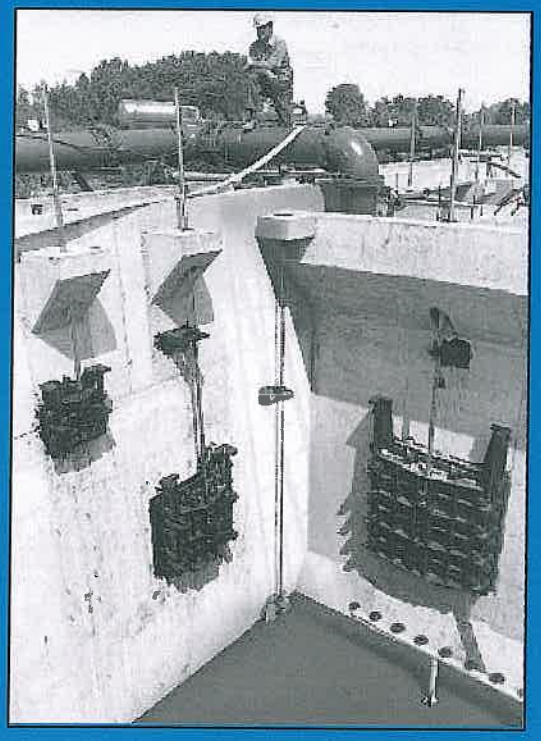

HEAVY DUTY, CAST IRON

SERIES 5000 AND 7000 SLUICE GATES

GENERAL DESCRIPTION (continued)

FRAMES

The cast iron frames are square or rectangular in shape, of one piece construction and may have square, rectangular, or circular openings. Standard Flangeback, Rectangular Extended Flangeback and Circular Extended Flangeback types are available.

GUIDE RAILS AND WEDGES

Cast iron guide rails of a length sufficient to support at least one-half of the slide when fully opened are cast integrally with the frame on small and medium size gates and are mounted on fully machined surfaces with dowels and corrosion resistant fasteners on the larger sizes. Wedge block pads are cast as a part of the guide rails and reinforced with heavy ribs. The wedge seal faces or adjustable wedge blocks are attached to these. A fully machined groove to receive the slide tongue extends the full length of each guide. Guides are extra heavy and reinforced for their full length to assure maximum rigidity against wedging pressure and unseating heads when the slide is partially open.

SLIDE

The cast iron Slide (Cover) has vertical and horizontal reinforcing ribs, a heavy square nut pocket cast integrally with the slide, and a machined guide tongue extending the full length of each side. Minimum tolerances are maintained between the slide tongue and guide grooves to provide maximum stability of the slide in partially open positions, thus minimizing chatter. Gates with Non-Rising Stems are furnished with a special slide having a heavy thrust nut pocket cast integrally with the slide. This pocket is located above the opening of the gate so that at no time will the stem protrude into the waterway. The thrust nut in the slide pocket is not secured to the stem and acts as a lift nut as the stem is rotated.

SEATS

Seating faces are of a corrosion resistant material and are secured in fullwidth dovetail grooves machined in the cast iron frame and slide (see material schedule for alloys available). Seat facings are of a work hardening malleable type and are deformed and locked into place in the grooves without the use of fasteners. An accurate and positive attachment is obtained with the grooves completely filled. The full width dovetail design eliminates the possibility of leakage between the corrosion resistant seat material and the castings. The full width dovetail design of the seating faces prevents damage to these faces which may occur in dovetail designs having overhangs which may work loose during normal operation of the gate. (See detail drawing)

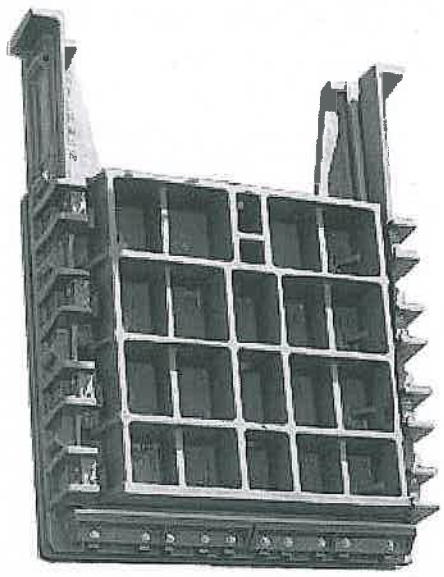

S-7000

JOBSITE HANDLING AND INSTALLATION

To assure proper operation of our gates, care must be taken in the receiving, handling, and storage of all gates and appurtenances. Installation must be accurately performed. See the Waterman Heavy Duty Sluice Gate Installation Manual for complete detailed instructions.

Waterman Heavy Duty Sluice Gates are completely assembled in the plant and are given an AWWA C-501 inspection by qualified inspectors before shipment. This includes operational, visual and feeler gauge tests. Seat clearance must not pass a .004 gauge. When required, a hydrostatic test can be performed before shipment at an extra charge. Waterman gates, properly handled, stored and installed should meet these same standards in operation.

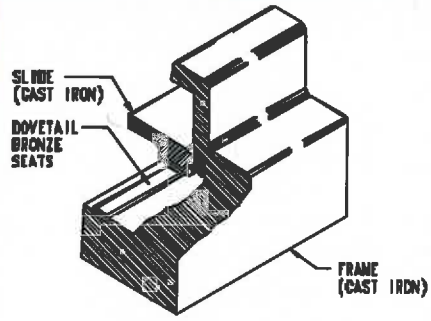

Cross Section
Sluice Gate Frame and Cover

HEAVY DUTY, CAST IRON

SERIES 5000 AND 7000 SLUICE GATES

PARTS IDENTIFICATION	
No.	Name
1	Stem Cover
2	Gate Operator (Lift)
3	Top Wall Mounting Bracket
4	Stem
5	Stem Guide
6	Stem Coupling
7	Top Wedge
8	Cover Guide Rail
9	Thrust Nut
10	Side Wedge
11	Frame
12	Cover (Slide)
13	Thimble
14	Bottom Wedge

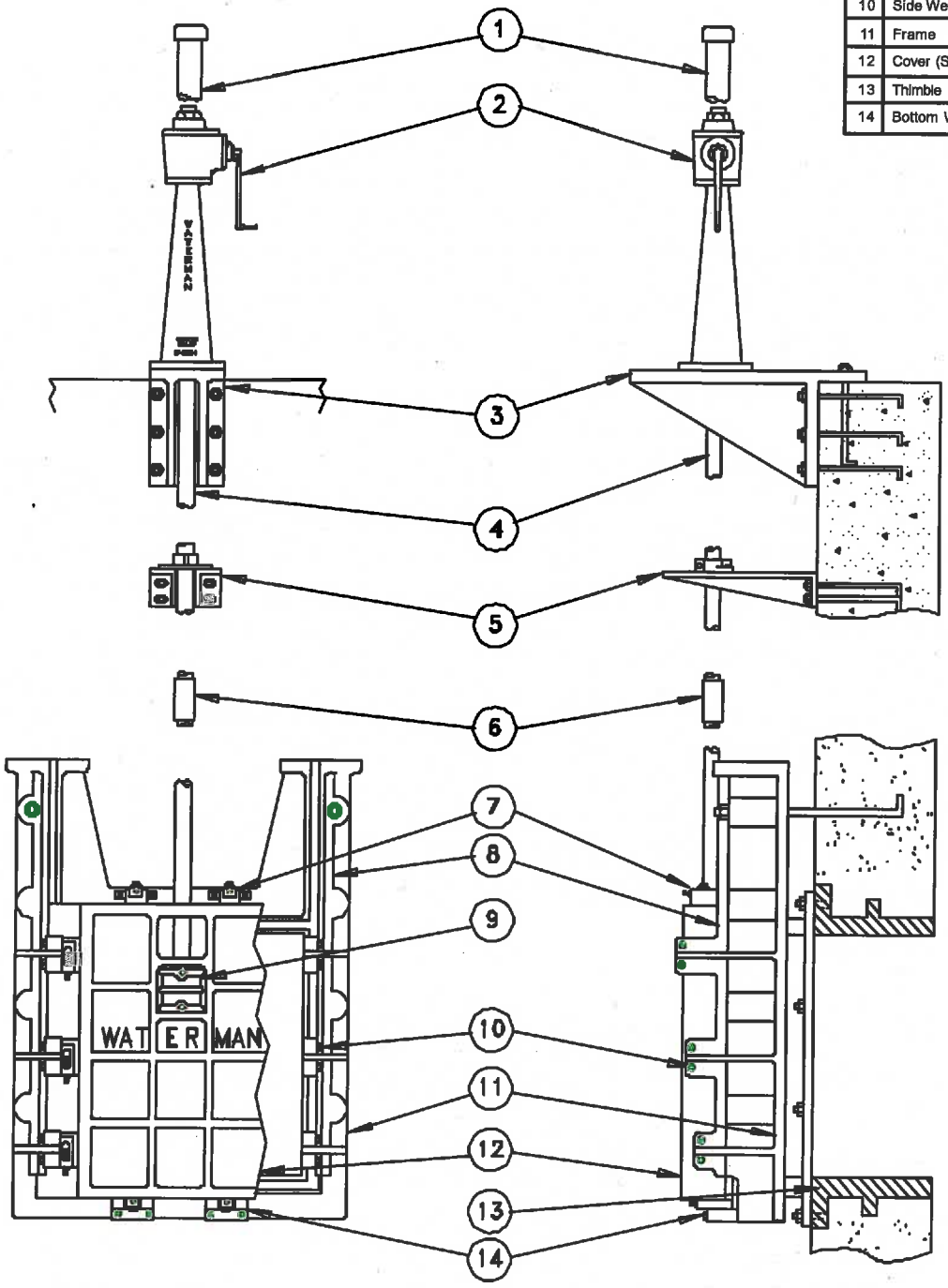

SELF-CONTAINED SERIES 5000 AND 7000 SLUICE GATES

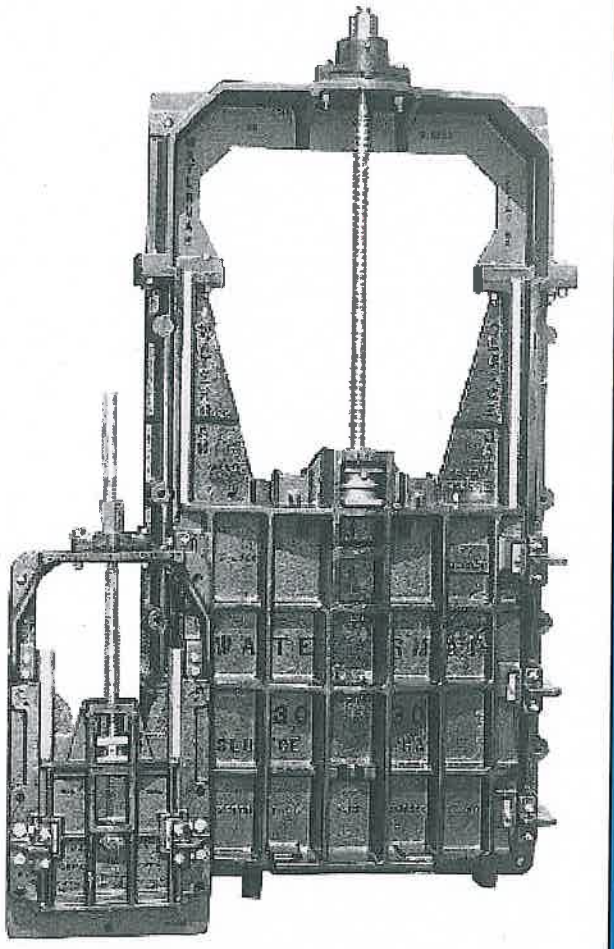

Self-contained gates are used when space above the gate installation, or the absence of structural supports, limits the installation of an independent operator.

Waterman self-contained gates are available in sizes up to 84" x 84" with standard cast yokes, and larger sizes with heavy duty fabricated yokes. Heavy duty cast iron yokes are attached to the machined pads on the gate guides. An extension of the guide provides clearance for the slide to move to the completely open position. A machined pad on the yoke provides a true surface for mounting the thrust collar or lift.

Self-contained gates may be furnished with rising stems, in which case the stem is secured to a standard slide thrust nut in the normal manner, and operated by a corrosion resistant stem and standard handwheel or crank type lift. The thrust of opening and closing is transmitted directly through the lift and yoke to the gate. Self-contained gates with non-rising stems utilize the non-rising stem (NRS) type cover arrangement and a stem having a thrust collar, contained in a housing on the yoke. Rotating the stem causes the stem block and slide to travel up and down. The operating thrust is transmitted directly to the yoke and gate frame.

Ball bearing lifts are not recommended for mounting on top of a self-contained yoke where the lift would be subject to submergence in the liquid being controlled. Special self-contained units with hydraulic cylinder operators or motorized lifts are available.

Non-Rising stems are not recommended for use in fluids with heavy slurry concentrations as threaded portions of stem may be submerged. Premature wear may result.

ADJUSTABLE

WEDGE SYSTEMS

There are two types of Waterman wedging systems, "B", and "B-1".

Type "B-1" wedges are always provided on Waterman computer-controlled machined sluice gates up to 48" in width. Type "B" wedges can be provided for all other Waterman heavy duty sluice gates.

TYPE "B" WEDGE SYSTEM

The "B" system has been designed to meet those specifications wherein the adjustable portion of the wedge must be on the slide. The wedge block facing surface is securely attached to the reinforced overhanging guide wedge block, double-bolted in shear and pinned to prevent movement. (This design allows for easy replacement of wedges in the field.)

The adjustable solid one-piece wedge operates on a machined tongue-and-groove surface, and is locked in place with a corrosion-resistant stud and adjusting bolt with lock nut.

TYPE "B-1" WEDGE SYSTEM

The "B-1" wedging system is designed for unit compatibility with all of Waterman's computer-controlled machined sluice gate surfaces on gates up to 48" in width. The "B-1" wedge, also with computer-controlled machined surfaces, assures optimum mating of wedge and gate surfaces, and a positive, leak-inhibiting closure.

TOP AND BOTTOM WEDGES

When Top and Bottom Wedges are required for unseating heads, fully adjustable units, made of solid corrosion resistant castings, are provided. These wedges are easily adjustable and locked into position with corrosion resistant fasteners. All sliding, mating, and wedging surfaces are fully machined.

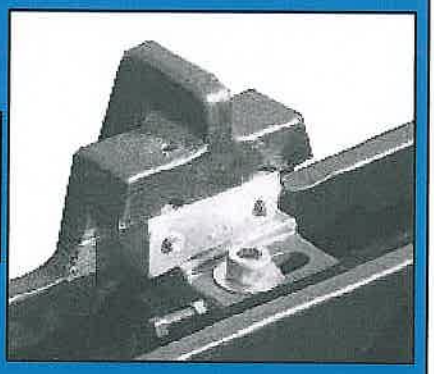

Waterman Standard Type "B" Wedge (Adjustable portion of wedge on slide)

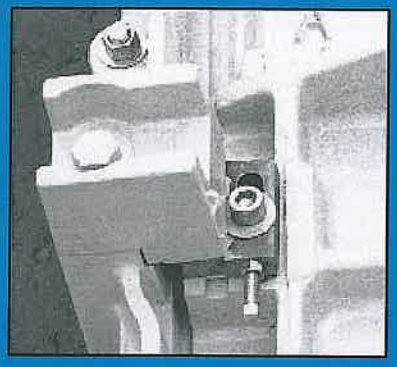

Waterman Standard Type "B-1" Wedge

Top Wedge

Bottom Wedge

CAST IRON SLUICE GATE WITH

"Q-SEAL" FLUSHBOTTOM SEAL

A "Q-Seal" flushbottom seal gate is used wherever a continuous smooth opening (without obstructions to impede solids) is desirable. Typical installations include wastewater settling tanks, aeration tanks, and sedimentation and flocculation basins.

CONSTRUCTION FEATURES

Flushbottom closures feature a neoprene seal securely contained at the invert of the frame. The design of this seal provides a flat plane across the bottom of the gate without projections into the opening to obstruct flow. The seal is mounted on a cast iron bracket and held in place with a corrosion resistant retainer bar and fasteners. The seal is firmly supported on three sides, exposing only the flat top side, minimizing damage from floating objects, wet-dry conditions or sunlight. The seal is easily replaceable without disassembly of the gate.

When a flushbottom seal is used, a smooth rounded projection on the bottom of the slide replaces the normal metal seat and seat facing. The slide closes against the seal, compressing the neoprene between the slide and frame, making a watertight seal across the bottom of the opening. Bottom wedges are not used as they are not necessary for Waterman gates with a flushbottom closure.

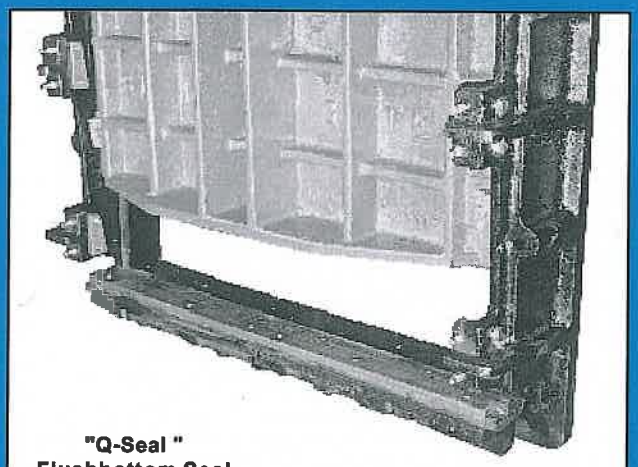

"Q-Seal "
Flushbottom Seal

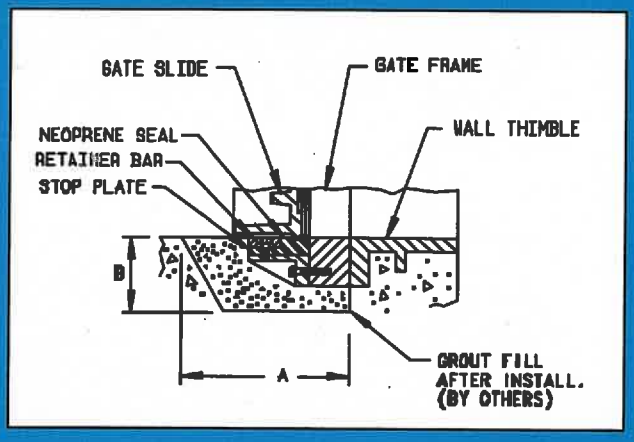

RECOMMENDED INSTALLATION CLEARANCES FOR FLUSHBOTTOM GATES				
Gate Diameter or Opening Height	Standard Flangeback Gate		Extended Flangeback Gate	
	A	B	A	B
6" thru 24"	12	7	16	15
30" thru 42"	15	7	20	15
48" thru 72"	15	9	23	17
78" thru 120"	18	10	26	18

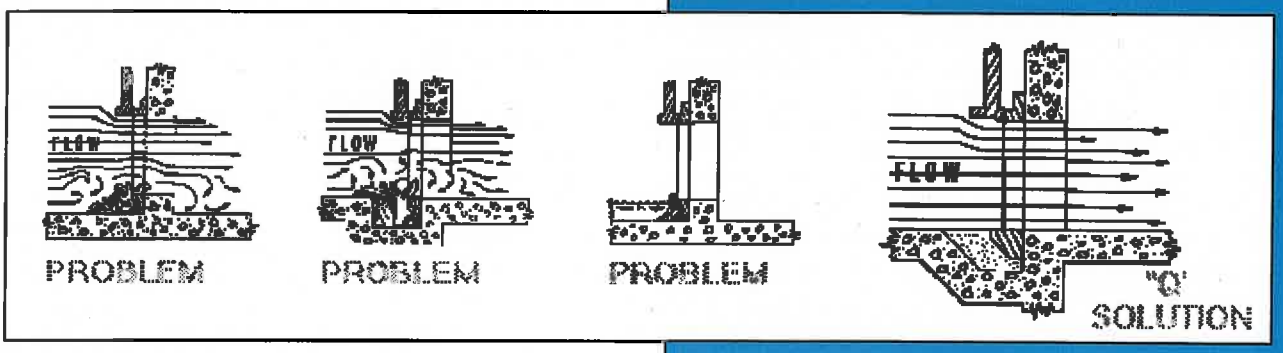

S-5000 & SC-5000,
S-5900 & SC-5900 ***
SQUARE OR ROUND OPENING
SLUICE GATES

PARTS	
No.	Name
1	Frame
2	Cover
3	Thrust Nut
4	Cover Wedge Assembly
5	Guide Rails
6	Guide Rail Wedge Assembly
7	Top Wedge Assembly
8	Bottom Wedge Assembly
9	Fasteners
10	Seats

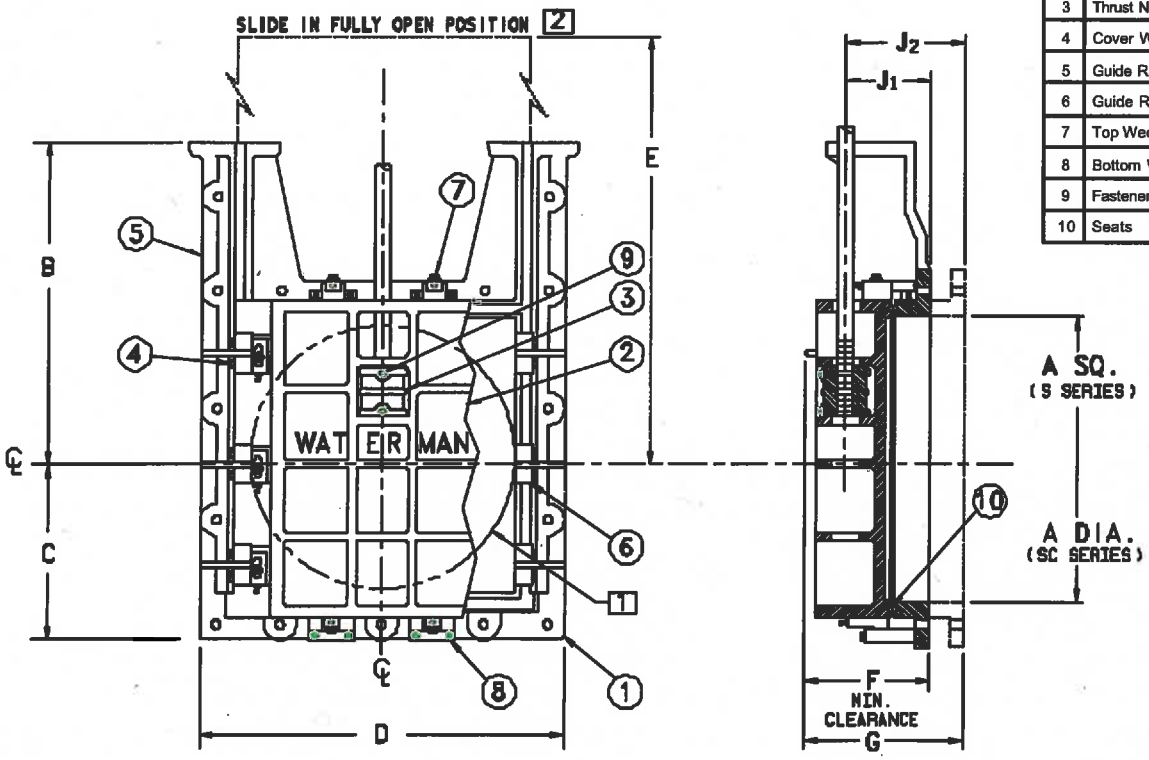

NOTES:

1. SC Series shown. S Series gate has square opening.
2. Top of NRS cover or top of wedges.

GATE SIZE-** A	B	C	D	E	F	J1*	G	J2*
6	9¾	6½	14½	15	9	4½	13	7½
8	10⅛	8	17	19	9	4½	13	7½
10	12	9½	19	22	9	5	13	8½
12	14¼	10⅜	20¾	25	9½	5	13½	8½
14	16	11½	23	28	9½	5	13½	8½
15	17	11½	23	29½	9½	5	13½	8½
16	18	12½	25	31	9½	5	13½	8½
18	20¾	13½	27	34	11½	6¼	15½	10⅝
20	23¾	15	30	37	11½	6⅜	15½	10½
21	24	15	30	37½	11½	6⅜	15½	9⅞
24	28½	16¾	33	43	11½	7½	15½	11½
30	37½	19¾	39	52	12½	7	17	11½
36	41½	22½	45	61	12½	7	17	11½
42	47½	26½	52½	70	12½	8	17	12
48	51¼	29	57	79	14	8	19	12

* Add for grout pad thickness if applicable.
** Square or Round

GATE SIZE** A	B	C	D	E	F	J1*	G	J2*
54	59¼	33	66	88	15½	8½	20	12½
60	64	36	72	97	15½	8¾	20	12½
66	68	39	78	107	15½	9	20	12½
72	74	42	84	116	15½	9	20	13¼
78	84	45	90	125	15½	10	20	13¾
84	87	47½	95¾	133	18½	9½	23	13¾
90	94	53	106	142	18½	11	23	15¼
96	100	56	112	151	18½	11	23	15¼
108	110	62	124	170	20	11	25	15½
120	124	68	136	188	20	11	25	15½
132	134	74	148	206	20	12½	25	16¾

* Add for grout pad thickness if applicable.
** Square or Round
*** Size limitations may apply to models S-5900 and SC-5900

NOTE: FOR PRELIMINARY DESIGN PURPOSES ONLY
DO NOT USE FOR INSTALLATION
UNLESS PART OF CERTIFIED & APPROVED SUBMITTAL

Waterman Industries

S-5000 & S-5900 RECTANGULAR OPENING (See drawing page 15)

GATE SIZE	B	C	D	E	F	J1	G	J2
12 X 18	20¾	13½	20¾	34	11½	5	15½	8¾
12 X 24	28½	17¼	21	43	11½	7	15½	11
12 X 36	38	22½	20¾	61	12½	7	17	11
15 X 18	20¾	13½	24	34	11½	6¼	15½	9⅞
18 X 6	9¾	7½	27	15	11½	6¼	15½	9
18 X 12	16¾	9¾	26	25	9¼	4¾	15½	8½
18 X 24	26½	16¾	27¼	43	11½	7	15½	11
18 X 30	37½	19¾	27	52	12½	7	17	11
18 X 36	38	22½	27	61	12½	7	17	11
18 X 48	51¼	29	27	79	14	7	19	11½
18 X 72	74⅜	41	27	116	14	7	19	11½
24 X 12	14¼	10¾	33	25	11½	6½	15½	9½
24 X 18	19	13½	33	34	11½	7	15½	10¾
24 X 30	37½	19¾	33	52	12½	7	17	11
24 X 36	38	22½	33	61	12½	7	17	11½
24 X 42	47¼	26½	33	70	12½	7	17	11½
24 X 48	50	29	33½	79	14	7	19	11
30 X 18	20¾	13½	39	34	12½	7	17	11½
30 X 24	28½	16½	39	43	12½	7	17	11½
30 X 36	41¼	22½	39	61	12½	7	17	11
30 X 42	47½	26½	40½	70	12½	8	17	12
30 X 48	51¼	29½	41	79	14	8	19	12
30 X 60	64	36	42	97	15½	8	20	12½
30 X 72	75	42	42	116	15½	8	20	12½
36 X 12	14¼	10¾	45½	25	12½	7	17	11
36 X 18	20¾	13¾	45½	34	12½	7	17	11
36 X 24	28½	16¾	45	43	12½	7	17	11
36 X 30	32	19¾	45	52	12½	7	17	11
36 X 42	47¼	26	46	70	12½	8	17	12
36 X 48	51¼	29½	47	79	14	8	19	12
36 X 60	64	36	48	97	15½	8	20	12½
36 X 72	74	42	48	116	15½	8	20	12½
36 X 84	87	48	48	139	18½	9½	23	13¾
39 X 84	87	48	51	139	18½	9½	23	13¾
42 X 30	37½	20¼	52½	52	12½	8	17	12
42 X 36	41½	23¼	52½	61	12½	8	17	12
42 X 48	51¼	29	52½	79	14	8	19	12
42 X 54	66¼	32¼	52½	91	12½	8	17	12
42 X 60	64	36	54	97	15½	8	20	12½
42 X 72	74¼	42	54¼	116	15	8	20	12½
48 X 24	28½	17	58	43	14	8	19	12
48 X 30	32	20½	59	52	14	8	19	12
48 X 36	38	23½	59	61	14	8	19	12
48 X 42	47½	26½	59	70	14	8	19	12
48 X 54	59¼	33	60	88	14	8	19	12½
48 X 60	62½	36	60	97	15½	8	20	12

GATE SIZE	B	C	D	E	F	J1	G	J2
48 X 72	74	42	60	116	15½	9	20	13¼
48 X 84	87	48	60	133	18½	9	23	13
48 X 96	100	56	64	155	18½	11	23	15¼
48 X 120	124	68	64	187	20	11	25	15½
54 X 24	28½	18	66	43	15½	8½	20	12½
54 X 36	41½	24	66	61	15½	8	20	12
54 X 48	51¼	30	66	79	15½	8½	20	12½
54 X 60	64	36	66	97	15½	8¾	20	12½
54 X 72	75	42	66	116	15½	9	20	13¼
54 X 84	87	48	66	133	14	8½	21¼	12
60 X 36	38	24	72	61	15½	8	20	12
60 X 48	52½	30	72	79	15½	8½	20	12½
60 X 72	74	42	72	116	15½	9	20	13¼
60 X 84	87	48	72	133	18½	8½	23	12
60 X 96	100	56	76	151	18½	11	23	15
60 X 120	124	68	76	191	20	13	25	15½
72 X 36	41½	24	84	61	15½	8	20	12
72 X 48	51½	30	84	79	15½	9	20	13
72 X 54	56	33	84	88	15½	9	20	12½
72 X 60	63¼	36	84	97	15½	9	20	13¼
72 X 84	87	47⅞	84	133	18½	9¾	23	13¾
72 X 96	100	56	88	151	18½	11	23	15¼
72 x 108	110	62	88	170	14	11	19	15½
84 x 48	52	30	96	79	18½	8	23	12½
84 x 60	64	36	96	97	18½	8½	23	12
84 x 66	68	39	96	107	18½	9½	23	13¾
84 x 72	74⅜	42	96	115	18½	9½	23	13¾
84 x 108	110	62	100	170	14	11	19	15½
96 x 24	28½	18	108	43	18½	10½	23	14½
96 x 36	41½	24	108	61	18½	10½	23	14½
96 x 42	47½	27	108	70	14	10½	19	14½
96 x 60	64	36	108	97	18½	11	23	15¼
96 x 72	74	44	112	116	18½	11	23	15¼
96 x 120	124	68	112	187	20	11	25	15¼
102 x 78	82	45	114	124	20	11	25	16
108 x 60	64	38	124	97	20	11	25	15
108 x 72	74	44	124	116	20	11	25	15
108 x 84	87	50	124	133	20	11	25	15½
108 x 120	124	68	124	187	20	12	25	16½
108 x 144	150	80	124	225	20¾	12½	27¼	17¾
120 x 60	64	36	136	97	18½	11	23	15¼
120 x 72	74	44	136	116	20	11	25	15½
120 x 84	87	50	136	133	20	11	25	15½
120 x 96	100	56	136	151	20	11	25	15½
120 x 108	110	62	136	175	20	11	25	15½
120 x 132	134	74	136	208	21¾	12½	27¼	18
144 x 84	87	50	160	133	22	11	27	15

S-5000-Y, SC-5000-Y, S-5900-Y & SC-5900-Y **
SELF-CONTAINED SLUICE GATE

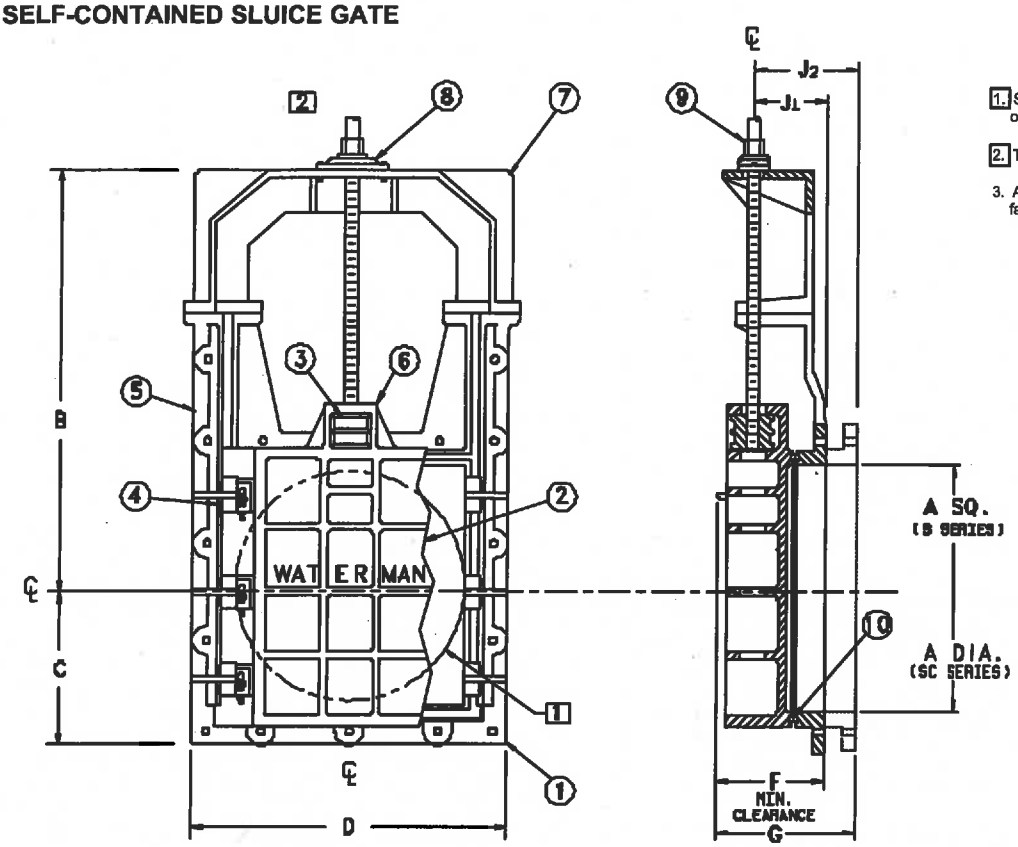

1. SC Series shown. S Series gate has square opening.
2. Type 1 lift shown. Geared lifts also available.
3. All gates are available with special height fabricated steel or stainless steel yokes.

PARTS	
No.	Name
1	Frame
2	Cover
3	Thrust Nut
4	Side Wedge Assy.
5	Guide Rail
6	NRS Bracket
7	Yoke
8	Lift Collar
9	Lift Nut
10	Seats (non-corrosive)

GATE SIZE A	B	C	D	F	J1*	G	J2*
6	16	6½	14½	9½	4½	13½	7½
8	21½	8	17	9½	4½	13½	7½
10	24½	9½	19	9½	5	13½	8½
12	27⅜	10⅜	20¾	10	5	14	8½
14	30	11½	23	10	5	14	8½
15	31¾	11½	23	10	5	14	8½
16	33½	12½	25	10	5	14	8½
18	37	13½	27	12	6¼	16	10⅝
20	41½	15	30	12	6⅜	16	10½
21	41½	15	30	12	6⅜	16	10
24	46	16¾	33	12	7½	16	11½
30	55	19¾	39	13	7	17½	11½
36	64	22½	45	13	7	17½	11½
42	73½	26½	52½	13	8	17½	12
48	82	29	57	14½	8	19½	12
54	111	33	66	15½	8½	20	12½
60	116	36	72	15½	8¾	20	12½
66	127	39	78	15½	9	20	12½
72	138	42	84	16¾	9¼	20¾	13¼
78	141	45	90	15½	10	20	13¾
84	150	47½	95¾	18½	9½	23	13¾

* Add for grout pad thickness if applicable.
** Size limitations may apply to models S-5900 and SC-5900.

GATE SIZE	B	C	D	F	J1	G	J2
12 x 24	44	17¼	21	11½	7	15½	11
12 x 36	62⅜	22½	20¾	12½	7	17	11
15 x 18	36½	13½	24	11½	6¼	15½	9⅞
18 x 6	26	7½	27	11½	6¼	15½	9
18 x 30	55	19¾	27	12½	7	17	11
18 x 36	63⅜	22½	27	12½	7	17	11
24 x 18	37¼	13½	33	11½	7	15½	10¾
24 x 30	55	19¾	33	12½	7	17	11
24 x 36	63½	22½	33	12½	7	17	11½
24 x 48	81	29	33½	14	7	19	11
30 x 18	38¼	13½	39	12½	7	17	11½
30 x 24	46	16½	39	12½	7	17	11½
30 x 36	64¾	22½	39	12½	7	17	11
30 x 42	73½	26½	40½	12½	8	17	12
30 x 60	104	36	42	15½	8	20	12½
42 x 36	67½	23¼	52½	12½	8	17	12
42 x 54	95	32¼	52½	12½	8	17	12
48 x 24	59¼	17	58	14	8	19	12
48 x 30	62¾	20½	59	14	8	19	12
48 x 42	73½	26½	59	14	8	19	12
48 x 60	102¾	36	60	15½	8	20	12

S-7000 SQUARE, ROUND & RECTANGULAR SLUICE GATES

PARTS	
No.	Name
1	Frame
2	Cover
3	Thrust Nut
4	Cover Wedge Assembly
5	Guide Rails
6	Guide Rail Wedge Assembly
7	Top Wedge Assembly
8	Bottom Wedge Assembly
9	Fasteners
10	Seats

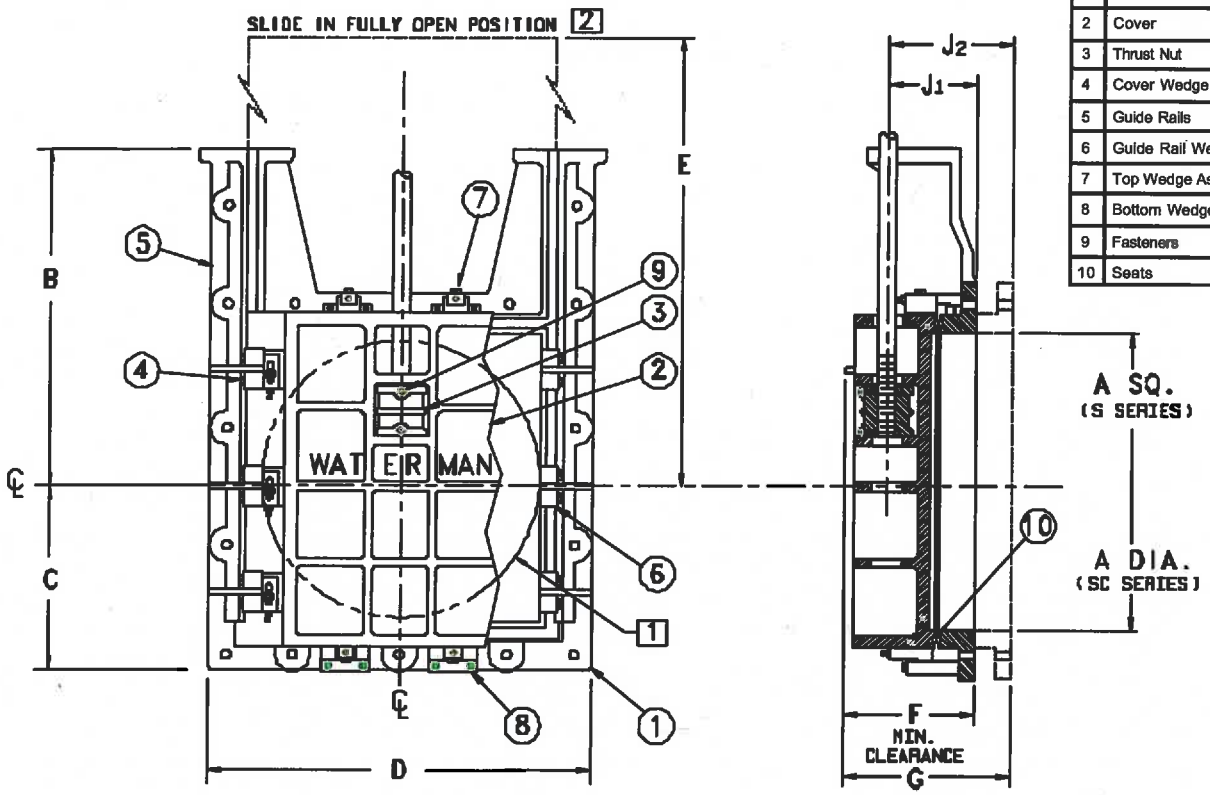

NOTES:

1. SC Series shown. S Series gate has square opening.
2. Top of NRS cover or top of wedges.

GATE SIZE A	B	C	D	E	F	J1	G	J2
12	14¼	10⅜	20¾	21	9½	5	13½	8½
16	18	12½	25	27	9½	5	13½	8½
18	20¾	13½	27	31	11½	6½	15⅞	10¾
24	28½	16¾	33	39	10½	8	14½	12½
30	37½	20	40	48	13¾	8	17¾	12
36	41½	22½	49¼	57	12	8½	17	12½
39⅜ 1 METER	45	25	50	63½	12	8	17	12
42	47½	26½	52	66	12	8	17	12
48	51¼	29	57½	75	14¾	8½	19	12½
54	59¼	33	66	84	12	8½	17	12½
60	64	36	72	93	16	9	21	13½
66	68	39	78	102	14	9	19	13½
72	74	42	84	112	14	9	19	13¼
84	87	47½	95¾	130	18½	12½	23	16½
96	100	56	112	148	18½	11	23	15¼

GATE SIZE	B	C	D	E	F	J1	G	J2
24 X 30	37½	20	34	48	10½	8	14½	12
24 X 42	47¼	26½	33	66	12½	7	17	11½
24 X 48	50	29	33½	75	12	7	17	11
30 X 18	20¾	14	40	30	10½	8	14½	12
30 X 48	51¼	29	40	75	14	8	19	12
36 X 18	20¾	13¾	45½	30	7	8½	12	12½
39 X 84	87	48	51	130	18½	9½	23	13¾
42 X 36	41½	23¼	52½	57	12	8	17	12
42 X 48	51¼	29	52½	75	12	8	17	12
48 X 42	47½	26½	59	66	12	8	17	12
48 X 60	62½	36	60	93	12	8	17	12
48 X 72	74	42	60	112	14	9	19	13¼
60 X 84	87	50	76	130	18½	12	23	15½
84 X 60	104	38½	101	99	22	12¾	27	16½
108 X 84	87	50	124	130	20	11	25	15½

NOTE: FOR PRELIMINARY DESIGN PURPOSES ONLY
DO NOT USE FOR INSTALLATION
UNLESS PART OF CERTIFIED & APPROVED SUBMITTAL

ELECTRIC MOTOR ACTUATORS

FEATURES:

- **EIM, Limitorque, Auma, Rotork and Keystone**
- **From Simple Open-Close to Logic Controlled Automatic Operation**
- **Benchstand or Pedestal Mounting**
- **NEMA Rated Control Cabinets**
- **Local or Remote Controls**
- **Manual Override Feature**
- **Single or Three Phase Power Capability**

GENERAL:

Waterman furnishes electric motor actuators manufactured by all major producers. These include EIM, Limitorque, Auma, Rotork and Keystone. These units are mated to a precision machined lift nut and mounted on Waterman pedestals or base plates for use with most Waterman gates. Controls for these actuators vary greatly. Waterman can help you select and design the proper unit for your project. Contact Waterman for detailed brochures on the various units or for any design assistance you may require.

LIMITORQUE

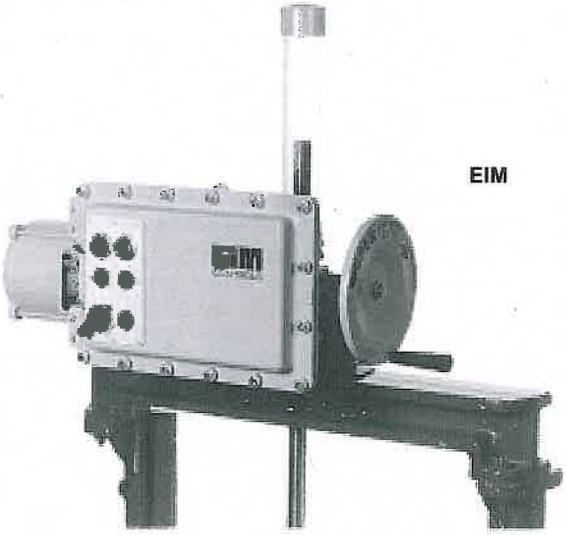

EIM

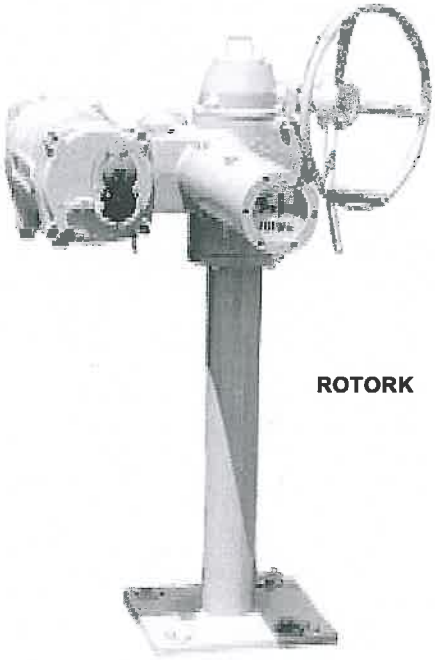

ROTORK

AUMA

ENVIROMAG 2000 Technical Datasheet

Electromagnetic Flow Sensor

- Engineered and manufactured for the North American water and wastewater industry
- NSF Approved for potable water
- Proven and unsurpassed lifetime performance
- Long-term reliability and durability
- Available IP68 rating
- Available for direct burial installation

KROHNE

Solution for the water & wastewater Industry

The **ENVIROMAG 2000** magmeter is the optimum solution for North American water and wastewater measurement applications. It's design and performance makes it the choice for flow measurement throughout the process.

1. Flanged design
2. PP. Polyurethane and Hard Rubber liner
3. 3/8" to 80" diameter
4. ANSI or AWWA flanges

Highlights

- Short inlet and outlet runs
- Unaffected by contamination, solids, fibers, slurries
- No maintenance
- Wet calibrated - includes calibration report
- Suitable for potable, chlorinated, fluorinated water, etc.
- Continuous self diagnostics
- NSF approved
- Available "virtual reference" eliminates grounding rings

Applications

- Wastewater processes
- Desalination processes
- Irrigation networks
- Clean water processes
- Water distribution
- Cooling stations - district heating

OPTIFLUX converters: All converters fit to all sensors

IFC 300 High-performance solution

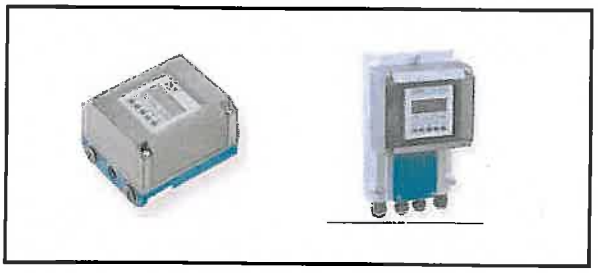

IFC 010 Economical solution

Technical Data

Nominal diameter	VB14											VB15								VB16											
ASME [inch]	3/8"	1/2"	1"	1 1/4"	1 1/2"	2"	2 1/2"	3"	4"	5"	6"	8"	10"	12"	14"	16"	18"	20"	24"	28"	32"	36"	40"	48"	54"	56"	60"	64"	72"	80"
DN [mm]	10	15	25	32	40	50	65	80	100	125	150	200	250	300	350	400	450	500	600	700	800	900	1000	1200	1350	1400	1500	1600	1800	2000

Nominal Flange Pressure

ASME B16.5 - 150 lbs RF	■	■	■	■	■	■	■	■	■	■	■	■	■	■	■	■	■	■	■												
ASME B16.5 - 300 lbs RF	○	○	○	○	○	○	○	○	○	○	○	○	○	○																	
AWWA - class B FF																	○	○	○	○	○	○	○	○	○	○	○	○	○	○	○
AWWA - class D FF																	○	○	○	■	■	■	■	■	■	■	■	■	■	■	■

> 80"/2000 mm on request (OPTIFLUX Series)
AWWA Class D flanges ≤150PSI
AWWA Class B flanges ≤50 PSI

Liner

Polypropylene	■	■																													
Hardrubber			■	■	■	■	■	■	■	■	■	■	■	■	■	■	■	■	■	■	■	■	■	■	■	■	■	■	■	■	■
Polyurethane						○	○	○	○	○	○	○	○	○	○	○	○	○	○	○	○	○	○								

See pressure and temperature limits for various liners

Electrodes (Replaceable)

Hastelloy C4	○	○	○	○	○	○	○	○	○	○	○	○	○	○	○	○	○	○	○	○	○	○	○	○	○	○	○	○	○	○	○
Stainless steel(AISI 316 L)	■	■	■	■	■	■	■	■	■	■	■	■	■	■	■	■	■	■	■	■	■	■	■	■	■	■	■	■	■	■	■
Hastelloy B2	○	○	○	○	○	○	○	○	○	○	○	○	○	○	○	○	○	○	○	○	○	○	○	○	○	○	○	○	○	○	○

(Titanium, Tantalum, Platinum available on request)

Grounding rings

Virtual Reference[1]			■	■	■	■	■	■	■	■	■	■	■	■	■	■	■	■	■	■	■	■	■	■	■	■	■	■	■	■	■
Hastelloy C4	○	○	○	○	○	○	○	○	○	○	○																				
Stainless steel 1,4571 (AISI 316 Ti)	■	■	■	■	■	■	■	■	■	■	■	■	■	■	■	■	■	■	■	■	■	■	■	■	■	■	■	■	■	■	■

[1]Only with IFC300 Converter. Must specify option at time of order.

Materials

Measuring tube - austenitic stainless steel	■	■	■	■	■	■	■	■	■	■	■	■	■	■	■	■	■	■	■	■	■	■	■	■	■	■	■	■	■	■	■
Housing																															
Sheet steel (polyurethane coated)	■	■	■	■	■	■	■	■	■	■	■	■	■	■	■	■	■	■	■	■	■	■	■	■	■	■	■	■	■	■	■
Stainless steel	○	○	○	○	○	○	○	○	○																						
Flanges																															
Carbon Steel	■	■	■	■	■	■	■	■	■	■	■	■	■	■	■	■	■	■	■	■	■	■	■	■	■	■	■	■	■	■	■
Stainless steel(AISI 316 L)	○	○	○	○	○	○	○	○	○	○	○	○	○	○	○	○	○	○	○	○	○	○	○								
Stainless steel (AISI 304)	○	○	○	○	○	○	○	○	○	○	○	○	○	○	○	○	○	○	○	○	○	○									
Connection box																															
Die-cast aluminium (polyurethane coated)	■	■	■	■	■	■	■	■	■	■	■	■	■	■	■	■	■	■	■	■	■	■	■	■	■	■	■	■	■	■	■
Stainless steel connection box	○	○	○	○	○	○	○	○	○	○	○	○	○	○	○	○	○	○	○	○	○	○	○	○	○	○	○	○	○	○	○

Protection category

IP 66 / 67 (NEMA 4/4X / 6)	■	■	■	■	■	■	■	■	■	■	■	■	■	■	■	■	■	■	■	■	■	■	■	■	■	■	■	■	■	■	■
IP 68 (NEMA 6P [1])	○	○	○	○	○	○	○	○	○	○	○	○	○	○	○	○	○	○	○	○	○	○	○	○	○	○	○	○	○	○	○

Approvals

General Purpose	■	■	■	■	■	■	■	■	■	■	■	■	■	■	■	■	■	■	■	■	■	■	■	■	■	■	■	■	■	■	■
CSA - Ordinary Locations	○	○	○	○	○	○	○	○	○	○	○	○	○	○	○	○	○	○	○	○	○	○	○	○	○	○	○	○	○	○	○

Please note the approvals are for flow sensors only.

Versions

Compact + IFC 300 C	■	■	■	■	■	■	■	■	■	■	■	■	■	■	■	■	■	■	■	■	■	■	■	■	■	■	■	■	■	■	■
Separate + IFC 300 F, R, W	■	■	■	■	■	■	■	■	■	■	■	■	■	■	■	■	■	■	■	■	■	■	■	■	■	■	■	■	■	■	■
Compact + IFC 010 C	■	■	■	■	■	■	■	■	■	■	■	■	■	■	■	■	■	■	■	■	■	■	■								
Separate + IFC 010 W	■	■	■	■	■	■	■	■	■	■	■	■	■	■	■	■	■	■	■	■	■	■	■								

Conductivity

Min. conductivity	min. 20 µS/cm

[1]Separate Only with Stainless Steel Junction Box

■ Standard Feature ○ Optional Feature

Dimensions and Weights

Refer to diagrams on page 7

Nominal size [inch-mm]	Flange Type/ Rating	Dimensions [mm]						Dimensions [inch]						Approximate weight	
					T						T				
		L[1]	H	W	box	010	300	L[1]	H	W	box	010	300	[kg]	[lb]
3/8"- 10	ANSI 150	150	179	89	257	285	339	5.9	7.1	3.5	10.1	11.2	13.3	7	16.0
1/2"- 15	ANSI 150	150	179	89	257	285	339	5.9	7.1	3.5	10.1	11.2	13.3	7	16.0
1" - 25	ANSI 150	150	179	108	257	285	339	5.9	7.1	4.3	10.1	11.2	13.3	8	18.0
1½" -40	ANSI 150	150	203	127	281	309	363	5.9	8.0	5.0	11.1	12.2	14.3	10	22.0
2" -50	ANSI 150	200	191	152	269	297	351	7.9	7.5	6.0	10.6	11.7	13.8	13	29.0
3" - 80	ANSI 150	200	210	191	288	316	370	7.9	8.3	7.5	11.3	12.4	14.6	17	37.0
4" - 100	ANSI 150	250	256	229	334	362	416	9.8	10.1	9.0	13.2	14.3	16.4	23	51.0
5" - 125	ANSI 150	250	280	254	358	386	440	9.8	11.0	10.0	14.1	15.2	17.3	27	60.0
6" - 150	ANSI 150	300	304	279	382	410	464	11.8	12.0	11.0	15.0	16.1	18.3	34	75.0
8" - 200	ANSI 150	350	355	343	433	461	515	13.8	14.0	13.5	17.0	18.1	20.3	50	110.0
10" - 250	ANSI 150	400	433	406	511	539	593	15.8	17.1	16.0	20.1	21.2	23.3	73	160.0
12" - 300	ANSI 150	500	499	483	577	605	659	19.7	19.7	19.0	22.7	23.8	25.9	100	220.0
14" - 350	ANSI 150	500	552	533	630	658	712	19.7	21.7	21.0	24.8	25.9	28.0	114	250.0
16" - 400	ANSI 150	600	608	597	686	714	768	23.6	23.9	23.5	27.0	28.1	30.2	155	340.0
18" - 450	ANSI 150	600	672	635	750	778	832	23.6	26.5	25.0	29.5	30.6	32.8	170	375.0
20" - 500	AWWA Cl. D	600	739	699	817	845	899	23.6	29.1	27.5	32.2	33.3	35.4	191	420.0
24" - 600	AWWA Cl. D	600	852	813	930	958	1012	23.6	33.5	32.0	36.6	37.7	39.8	250	550.0
28" - 700	AWWA Cl. D	700	918	927	996	1024	1078	27.6	36.1	36.5	39.2	40.3	42.4	320	704.0
30" - 750	AWWA Cl. D	750	974	984	1052	1080	1134	29.5	38.3	38.8	41.4	42.5	44.6	358	787.6
32" - 800	AWWA Cl. D	800	1038	1060	1116	1144	1198	31.5	40.9	41.8	43.9	45.0	47.2	395	869.0
36" - 900	AWWA Cl. D	900	1144	1168	1222	1250	1304	35.4	45.0	46.0	48.1	49.2	51.3	450	990.0
40" - 1000	AWWA Cl. D	1000	1258	1289	1336	1364	1418	39.4	49.5	50.8	52.6	53.7	55.8	665	1463.0
42" - 1050	AWWA Cl. D	1300	1313	1350	1391	Not Applicable	1473	51.2	51.7	53.1	54.8	Not Applicable	58.0	683	1502.6
48" - 1200	AWWA Cl. D	1300	1483	1511	1561	Not Applicable	1643	51.2	58.4	59.5	61.5	Not Applicable	64.7	970	2134.0
54" - 1350	AWWA Cl. D	1600	1635	1682	1713	Not Applicable	1795	63.0	64.4	66.2	67.4	Not Applicable	70.7	TBA	TBA
60" - 1500	AWWA Cl. D	1700	1782	1860	1860	Not Applicable	1942	66.9	70.2	73.2	73.2	Not Applicable	76.5	TBA	TBA
70" - 1750	AWWA Cl. D	1800	2139	2197	2217	Not Applicable	2299	70.9	84.2	86.5	87.3	Not Applicable	90.5	TBA	TBA

Nominal size [inch-mm]	Flange Type/ Rating	Dimensions [mm]						Dimensions [inch]						Approximate weight	
					T						T				
		L[1]	H	W	box	010	300	L[1]	H	W	box	010	300	[kg]	[lb]
1" - 25	ANSI 300	150	145	124	223	251	305	5.9	5.7	4.9	8.8	9.9	12.0	8	18.0
1½" -40	ANSI 300	200	169	156	247	275	329	7.9	6.7	6.1	9.7	10.8	13.0	9	20.0
2" -50	ANSI 300	250	186	165	264	292	346	9.8	7.3	6.5	10.4	11.5	13.6	13	29.0
3" - 80	ANSI 300	250	214	210	292	320	374	9.8	8.4	8.3	11.5	12.6	14.7	17	37.0
4" - 100	ANSI 300	300	275	254	353	381	435	11.8	10.8	10.0	13.9	15.0	17.1	23	51.0
6" - 150	ANSI 300	350	316	318	394	422	476	13.8	12.4	12.5	15.5	16.6	18.7	36	79.0
8" - 200	ANSI 300	400	382	381	460	488	542	15.8	15.0	15.0	18.1	19.2	21.3	71	157.0
10" - 250	ANSI 300	500	448	445	526	554	608	19.7	17.6	17.5	20.7	21.8	23.9	112	247.0
12" - 300	ANSI 300	600	519	521	597	625	679	23.6	20.4	20.5	23.5	24.6	26.7	170	375.0
14" - 350	ANSI 300	700	595	584	673	701	755	27.6	23.4	23.0	26.5	27.6	29.7	215	474.0
16" - 400	ANSI 300	800	646	648	724	752	806	31.5	25.4	25.5	28.5	29.6	31.7	290	639.0
18" - 450	ANSI 300	800	709	711	787	815	869	31.5	27.9	28.0	31.0	32.1	34.2	359	789.0
20" - 500	ANSI 300	800	777	775	855	883	937	31.5	30.6	30.5	33.7	34.8	36.9	426	937.0
24" - 600	ANSI 300	800	903	914	981	1009	1063	31.5	35.5	36.0	38.6	39.7	41.8	611	1345.0

Notes:

[1] If flowmeter is supplied with separate grounding rings, the totals fitting length "L" is computed as follows: "L" + 2 x 3 mm (1/8")+ 2 x gasket thickness

Frontview ENVIROMAG 2000F

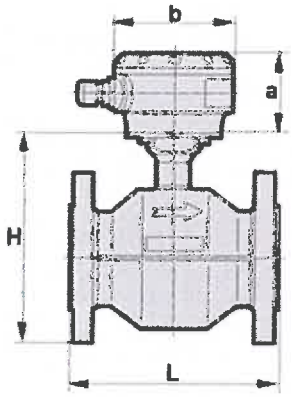

a = 77 mm / 3,1"
b = 111 mm / 4,4"

Sideview ENVIROMAG 2000F

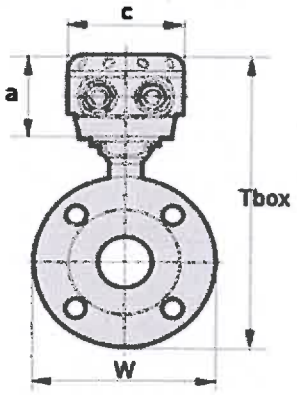

a = 77 mm / 3,1"
c = 106 mm / 4,2"

Frontview ENVIROMAG 2010C

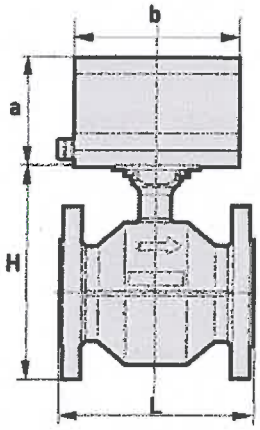

a = 105 mm / 4,2 "
b = 160 mm / 6,3"

Sideview ENVIROMAG 2010C

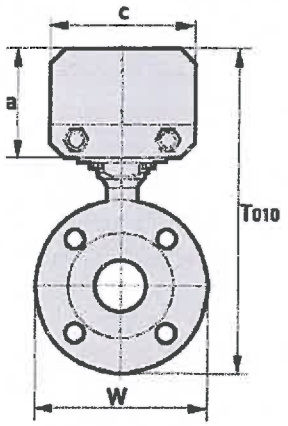

a = 105 mm / 4,2"
c = 140mm / 5,5"

Frontview ENVIROMAG 2300C

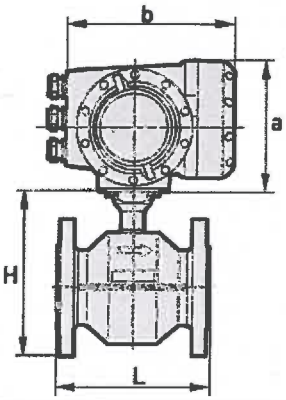

a = 155 mm / 6,1"
b = 202 mm / 7,8"

Sideview ENVIROMAG 2300C

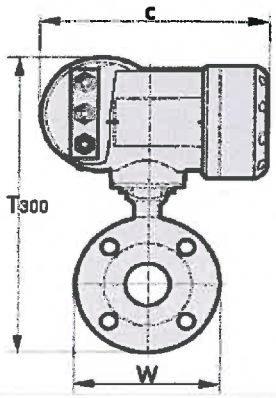

c = 260 mm / 10,2"