Attachment A: Jetty Creek Fish Passage Project Location

Jetty Creek Fish Passage Restoration
Lower Nehalem Watershed Council

OWRD Water Supply Development Account
Loan and Grant Application

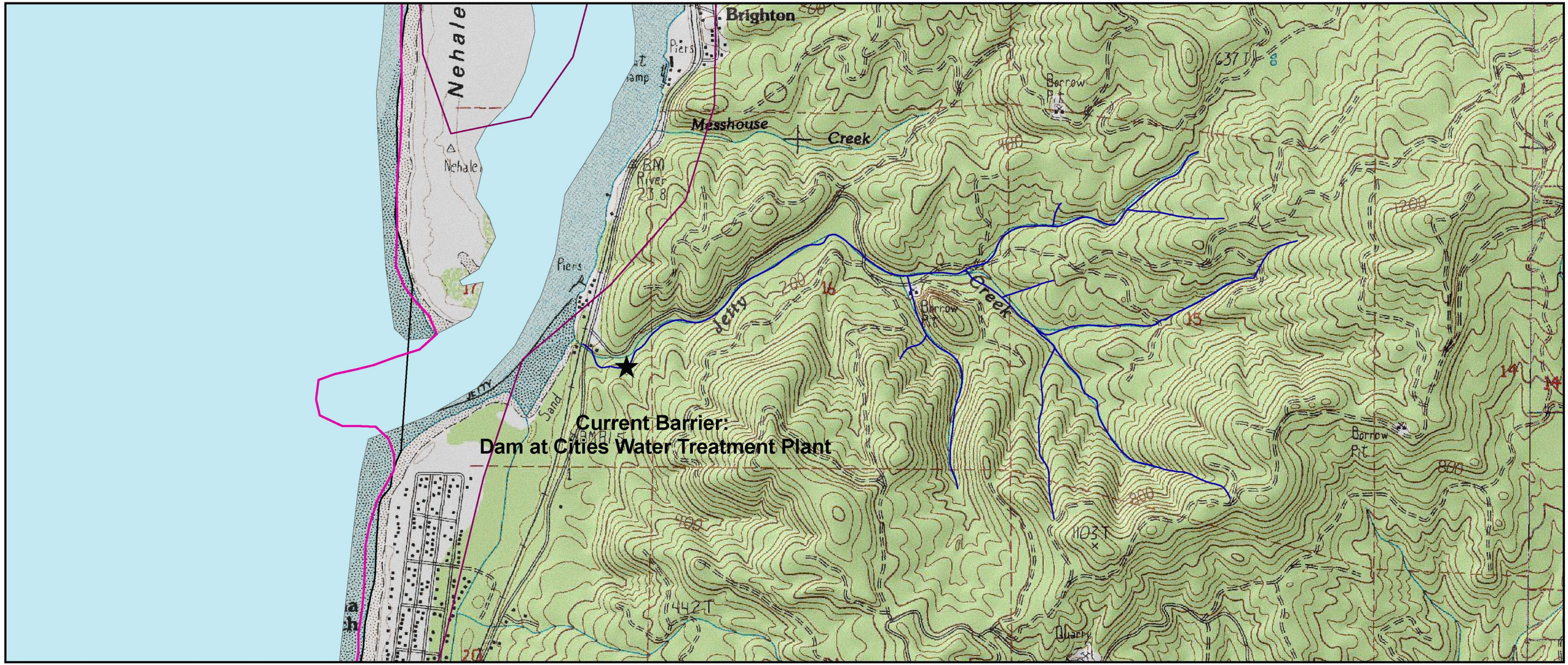

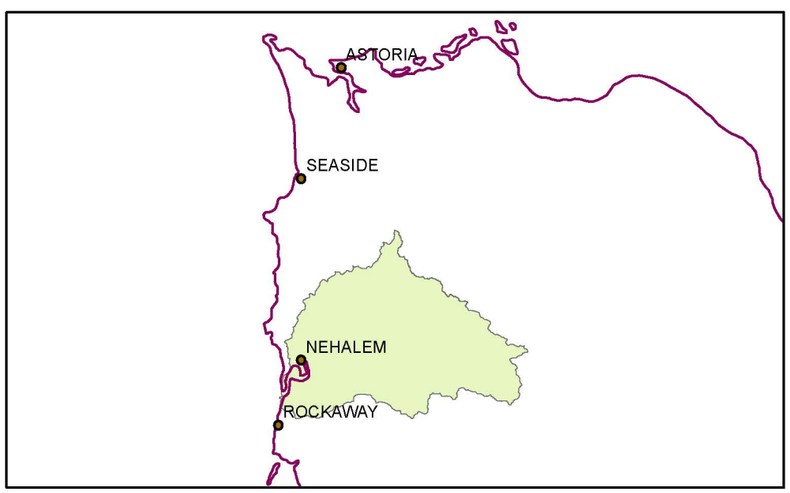

Legend

- State Boundary
- Lower Nehalem Watershed

0 5 10 20 30 40 Miles

N

0 1,750 3,500 7,000 Feet

JETTY CREEK FISH PASSAGE

Rockaway Beach, Oregon

Attachment B: Letters of Support

Jetty Creek Fish Passage Restoration
Lower Nehalem Watershed Council

OWRD Water Supply Development Account
Loan and Grant Application

216-1003

City of Rockaway Beach, Oregon
276 S. Highway 101, PO Box 5
Rockaway Beach, OR 97136
(503) 355-2291 FAX (503) 355-8221

April 14, 2015

OWEB Region 1 Review Team
775 Summer St. NE, Suite 360
Salem, OR 97301

Re: Support for the Lower Nehalem Watershed Council's Jetty Creek Fish Passage project

OWEB Review Team:

It is my pleasure to write this letter of support for the Lower Nehalem Watershed Council's Jetty Creek Fish Passage project. The City of Rockaway Beach has worked closely with the LNWC for close to five years now. Specifically this work includes a 2010 feasibility study, project design, water right perfection and Point of Diversion transfer application.

The City of Rockaway Beach fully supports this project and has included the anticipated cash match contribution of $40,000.00 in its budget for fiscal year 2015-2016. The City has also spent $8,100.00 on water right perfection and a POD transfer application. In addition, City staff has spent approximately 80 hours (at $35/hour) on the project totaling $2800.00. Lastly, the City will be providing a portable diesel pump valued at $21,000.00.

The City of Rockaway Beach looks forward to implementation of the Lower Nehalem Watershed Council's Jetty Creek Fish Passage project, and will continue to support the project during that process.

Sincerely,

Luke Shepard
Public Works Director
The City of Rockaway Beach

LukeShepard@rockawaybeachor.us

216-1003

Oregon
Kate Brown, Governor

Department of Fish and Wildlife
Northwest Region
4907 3rd Street
Tillamook, OR 97141
(503) 842-2741
Fax (503) 842-8385
ODFW.com

April 13, 2015

Oregon Watershed Enhancement Board
775 Summer ST. NE Ste 360
Salem, OR 97301-1290

RE: Jetty Creek Fish Passage Project

To Whom It May Concern:

This letter represents the Oregon Department of Fish and Wildlife's (ODFW) support for the project to modify the City of Rockaway Beach water intake structure to restore fish passage and the stream channel on Jetty Creek. ODFW is a committed partner in this project and has been working in support of this, and other restoration efforts on Jetty creek since 1995. ODFW supports the proposed project with the improvements on fish passage, fish screening, water quality, and overall improvements of instream habitat and natural channel dynamics within Jetty Creek. ODFW staff in both the Tillamook District office and the Fish Passage/Screening Program will continue to provide overall planning and implementation assistance towards this project.

The fish passage barrier created by the current water intake structure is considered a high priority for replacement by ODFW. It is significantly impacting migration for fish and other aquatic wildlife and is also impacting hydrologic and material flows. Jetty Creek is uniquely situated in the Nehalem Basin as the first tributary at the mouth of Nehalem Bay and one which migrating salmonids would use throughout portions of their life histories. Spawning, migrating and rearing fall Chinook, coastal coho salmon, winter steelhead, sea run cutthroat trout and lamprey will benefit from this project. The proposed channel design and development of a storage pond will end the need for annual disturbance of the stream by dredging maintenance at the city's intake pool.

ODFW's commitment towards this project can be valued at approximately $4,450 for in-kind match between our Fish Passage/Screening Program staff and Tillamook District staff time.

Sincerely,

Chris Knutsen
District Fish Biologist
ODFW - North Coast Watershed District

216-1003

LOWER NEHALEM WATERSHED COUNCIL

PO Box 249
Nehalem, OR 97131

(503) 368 – 7424
lnwc@nehalemtel.net

www.lnwc.nehalem.org

April 14, 2015

OWEB Region 1 Review Team
775 Summer St NE, Suite 360
Salem, OR 97301

RE: Jetty Creek Fish Passage OWEB Restoration Grant

To Whom It May Concern,

Lower Nehalem Watershed Council (LNWC), in partnership with City of Rockaway Beach, is seeking funds in support of the Jetty Creek Fish Passage project to reconnect 1.8 miles of high quality spawning and rearing habitat for salmon. Jetty Creek is the first stream adult salmon encounter as they migrate from the Pacific into Nehalem Bay and is the final tributary stream for out-migrating juveniles seeking freshwater refugia or a fresh/saltwater transition zone before entering the ocean. This stream is not only essential habitat for salmon, but is also the primary source of municipal water for the City of Rockaway Beach.

Restoration on Jetty Creek has long been a focus of LNWC, the Oregon department of Fish and Wildlife (ODFW), local residents, and private landowners. Throughout the years, restoration projects on the creek have included replacing four large culverts and a large wood placement project in the upper reaches and replacement of an undersized culvert under Highway 101 near the mouth. Since 2008, LNWC, the City of Rockaway Beach, and the Oregon Department of Fish and Wildlife have worked together to remove the final barrier to fish passage along Jetty Creek, the City's water intake structure.

By creating a natural fishway, moving the City's point of diversion upstream, enlarging the City's settling pond and impoundment, the project partners seek to address fish passage, maintain the City's drinking water intake, and improve water quality for the residents of Rockaway Beach. The design of the fishway will allow for fish passage, create habitat, and allow natural sediment transport through the system. The project will also allow for the three water rights, two municipal and one instream, to be gauged and regulated. By essentially making the City's settling pond and impoundment off channel the project will remove the final fish passage barrier on the stream, opening up a significant amount of spawning and rearing habitat essential for coho, steelhead, cutthroat, lamprey and resident species.

In addition to acting as the project manager for the project, LNWC is committed to providing at least $1500 of in-kind match in the form of volunteer time. The time will be spread over multiple volunteers from LNWC in preparation of the project, planning meeting and site visit attendance, contract review, project discussion at Council meetings, and additional support as needed. The hourly rate for volunteer time is $25.00/hour.

The Jetty Creek Fish Passage project is an excellent example of a diverse group of stakeholders working together to improve habitat for fish and to ensure the viability of a community's infrastructure. Projects like this are vital for fisheries and wildlife and local stakeholders, particularly those that promote migratory fish access to habitats essential for their different life history stages. We respectfully encourage the OWEB review team give thoughtful consideration to this project proposal and thank you for your time reviewing our application.

Sincerely,

Alix A. Lee

Alix Lee
Council Coordinator

216-1003

UNITED STATES DEPARTMENT OF COMMERCE
National Oceanic and Atmospheric Administration
NATIONAL MARINE FISHERIES SERVICE
1201 NE Lloyd Boulevard, Suite 1100
PORTLAND, OREGON 97232-1274

August 25, 2011

Cindi L. Lombard, E.I.T.
Project Designer
HBH Consulting Engineers
20055 SW Pacific HWY, Suite 201
Sherwood, Oregon 97140

RE: Jetty Creek Restoration and Fish Passage Project, Rockaway Beach, OR

Dear Cindi:

National Marine Fisheries Service (NMFS) reviewed HBH Consulting Engineers' design of both the upstream and downstream passage components of the City of Rockaway Beach's Stream Restoration and Fish Passage project on Jetty Creek. The design meets NMFS fish passage criteria for the Endangered Species Act listed adult and juvenile salmonids and therefore has NMFS approval for construction. This approval is based on the designs previously submitted. Any modifications to the plans stamped and dated 4/14/11 will require additional engineering review. Please retain this memo in your records and provide it as part of the future application packet required for Federal permitting of this project. Please contact Aaron Beavers Aaron.Beavers@noaa.gov or 503-231-2177, of my staff, if you have any questions.

Sincerely,

Keith Kirkendall

Keith Kirkendall
Chief, FERC and Water Diversion Branch
Hydropower Division

Attachment C: City of Rockaway Beach Utility Easement with ORM Timber Operating Company

Jetty Creek Fish Passage Restoration
Lower Nehalem Watershed Council

OWRD Water Supply Development Account
Loan and Grant Application

GRANT OF UTILITY EASEMENT

RECORDING REQUESTED BY:

Tillamook County, Oregon
10/28/2010 01:02:00 PM
DEED-ESMAT
$70.00 $11.00 $16.00 $10.00 - Total = $107.00

2010-006502

00100338201000065020140146

I hereby certify that the within instrument was received for record and recorded in the County of Tillamook, State of Oregon.

Tassi O'Neil, Tillamook County Clerk

When Recorded Mail Document:

City of Rockaway Beach
276 S Hwy 101
PO BX 5
Rockaway Beach, OR 97136

APN:

SPACE ABOVE THIS LINE FOR RECORDER'S USE

GRANT OF UTILITY EASEMENT

This UTILITY EASEMENT AGREEMENT ("Agreement") is made by and between ORM Timber Operating Company II, LLC, a Delaware limited liability company, having a mailing address of 19245 Tenth Avenue NE, Poulsbo, Washington 98370 ("Grantor") and the City of Rockaway, a municipality created under the laws of the State of Oregon, having a mailing address of Post Office Box 5, Rockaway Beach, OR 97136 ("Grantee"). Grantor and Grantee collectively are the "Parties".

WITNESSETH

WHEREAS, Grantor is the owner of certain lands and premises situated in the County of Tillamook, State of Oregon (the "Property"); and

WHEREAS, Grantee is desirous of acquiring certain rights and privileges over, under, above and across specific portions of the Property,

WHEREAS, Grantor is desirous of granting such rights and privileges in accordance with the terms and conditions herewith.

NOW, THEREFORE, for good and valuable consideration, receipt of which is hereby acknowledged, Grantor and Grantee hereby agree as follows:

1. GRANT, AUTHORIZED USE, AND TERMINATION OF PRIOR RIGHTS

(a) Grantor conveys and grants to Grantee, subject to the terms and conditions herein, a non-exclusive perpetual easement for water service, electric, and communication lines, fixtures,

impoundments, and facilities over the portions of the Property described as Parcel 1, Parcel 2, and Parcel 4 in Exhibit A to this Agreement (the "Easement Area"). Grantee shall have a right to use the Easement Area to install, operate, inspect, and maintain water service, electric, and communications lines, fixtures, impoundments, and facilities (the "Facilities") necessary for the operation of Grantee's municipal water system (the "Authorized Use").

Grantor also conveys and grants to Grantee, subject to the terms and conditions herein, a temporary easement over the portions of the Property described as Parcel 3 in Exhibit A for the construction of improvements to the Facilities (the "Temporary Easement"). The Temporary Easement shall expire on the earlier of the completion of the improvements to the Facilities or the fifth anniversary of the recording of this Agreement. Within thirty (30) days after the completion of the improvements to the Facilities using the Temporary Easement, Grantee shall provide Grantor with an as-built diagram or plan showing the location of the completed, improved Facilities on the Property.

(b) Grantor also grants and conveys to Grantee a non-exclusive right of ingress, egress and access to the Easement Area from U.S. Highway 101 across the portion of the Property described as Parcel 2 in Exhibit A (the "Access Area") for the purpose of installing, inspecting or maintaining the Facilities. Upon ninety (90) days' written notice to Grantee, Grantor shall have the right, at Grantor's expense, to relocate the Access Area.

(c) Grantee hereby agrees to relinquish, reconvey, cancel, and terminate all prior agreements, permits, or easements granted by Grantor or its predecessors in interest and pertaining to the Grantee's right and privileges to use the Easement Area including, but not limited to, that certain License Agreement dated May 15, 1981 and recorded in the records of Tillamook County in Book 310 at Page 014.

2. TYPE OF EASEMENT AND TERM.

This grant of easement is made in gross to Grantee for so long as the Easement Area is used within the scope of Authorized Use. This Agreement and the rights herein granted may not be assigned without a written and recorded Assignment and Assumption Agreement executed by Grantee, Grantee's assign, and Grantor, in its sole discretion.

3. COVENANTS AND WARRANTY.

(a) Grantee covenants and warrants to Grantor that it is duly organized, validly existing, and in good standing and has the right, power, and authority to enter into this Agreement and bind itself hereto through the signatory for Grantee below.

(b) The rights granted herein to Grantee are given expressly subject to existing encumbrances and other matters of record affecting the rights in any manner whatsoever. Grantor does not warrant that it has authority to permit the Authorized Use on behalf of any third party and Grantee shall secure all other permits, privileges or rights required for the Authorized Use. Grantor does not warrant title to the Property and shall not be liable for defects thereto or failure thereof.

(c) Grantor makes no representations as to the present or future conditions on the

Easement Area or Access Area and its fitness for the Authorized Use under this Agreement. Grantee accepts this Agreement subject to all danger or injury to persons and damages or destruction to property while Grantee is on or about the Easement Area or Access Area. In this regard, Grantee assumes all risk of injury or death to individuals who are on the Easement Area or Access Area pursuant to this Agreement and all risk of damage to property upon or in proximity to the Easement Area or Access Area with Grantee's knowledge or consent, without regard to whether such injury or damage is occasioned by known or unknown, hidden or disclosed defects in the Easement Area or Access Area or by the negligence of Grantor or any person in the employ or service of Grantor.

4. RESERVATIONS AND NON-INTERFERENCE.

(a) Grantor reserves the right to use the Easement Area for the benefit of adjacent lands, including the right to cross and re-cross and construct intersecting roads, and installation of overhead and/or underground utilities, for itself, its agents, employees, contractors, licensees, Grantees, successors, and assigns.

(b) Grantee shall not use the Easement Area or Access Area in any way that materially interferes with Grantor's use of the Property or so as to create a public or private nuisance. Grantee further agrees that Grantee and its employees, contractors, subcontractors, agents or invitees will not object to any lawfully conducted timber harvesting, management activities and/or development of property carried out by Grantor or its agents, contractors, successors or assigns.

(c) Grantee shall not install any Facilities by attaching them to trees on the Property. Grantor retains ownership of all merchantable and pre-merchantable timber on the Property.

(d) Grantee shall, at its expense, install any subsurface water lines at a depth (in no event less than 36 inches below ground surface) sufficient to avoid interference with Grantor's use of the Property, and mark the location of any underground lines.

5. MAINTENANCE AND ADDITIONAL CONDITIONS OF USE.

(a) Grantee agrees to comply with all applicable governmental laws, rules, statutes, regulations, and permits relating to its use of the Easement Area and Access Area, and to do so at Grantee's cost.

(b) Grantee shall promptly report to Grantor any violations of any laws, regulations, or permits relating to the Authorized Use of which Grantee has knowledge and shall promptly send to Grantor a copy of any notice of violation received by Grantee that relates to the Authorized Use. A copy of all citations or other written documents Grantee receives from any agency shall accompany the notice of violation. Grantee shall provide Grantor with copies of all correspondence to and from government agencies relating to any permits or regulations affecting (or claimed by any persons to affect) operations under this Agreement. Grantee shall promptly notify Grantor of any litigation or agency enforcement action arising in connection with this Agreement, including environmental actions, tax disputes, and bankruptcy proceedings of Grantee or its contractors.

(c) Grantee shall take reasonable care to prevent wildfires from igniting on or spreading onto the Easement Area or Access Area. If a wildfire should occur on or near the Easement Area or Access Area, Grantee shall immediately notify Grantor and appropriate government agencies and shall make any on-site equipment available to help suppress or contain the fire. Grantee shall comply with all fire prevention and suppression measures that Grantor may specify from time to time relating to Grantee's use of the Property. Grantee shall comply with all applicable state fire safety standards including requirements (if any) to maintain special equipment in vehicles. Grantee shall reimburse Grantor for all damages (including loss or damage to timber, and fire suppression costs) resulting from wildfires caused by Grantee's operations, contractors, or personnel, even if not attributable to negligence by Grantee or its agents.

(d) At its own cost, Grantee will keep and maintain the Easement Area and Access Area in good condition, reasonable wear and tear and damage from the elements excepted.

(e) Grantee shall repair all damage to and deterioration of Grantor's roads in the Access Area when such damage or deterioration is caused by Grantee's use of access rights granted herein. In the event that Grantee is the primary user of the road(s) Grantee shall maintain the road(s), at its sole cost and expense, on an ongoing basis during all periods of road use, including: periodic spot rocking and grading to prevent damage to subgrades; ditching and culvert maintenance to prevent water damage to the roads and creeks; and maintenance of all erosion control devices in good working order.

6. INDEMNIFICATION.

(a) Grantee shall, to the fullest extent permitted by law, indemnify, defend, and hold harmless Grantor and its agents, contractors, successors, or assigns from and against any and all liability for damages, costs, losses, and expenses resulting from, arising out of or in any way connected with the Authorized Use of the Property by Grantee or anyone else entering the Property at Grantee's direction or invitation, or the failure on the part of Grantee to perform fully its promises contained herein. This indemnity obligation shall apply whether such liability is caused by or contributed to by Grantor or any other party indemnified herein, unless caused by the sole active negligence or willful misconduct of Grantor.

(b) In any and all claims against Grantor by any employee of Grantee, any contractor, anyone directly or indirectly employed by any of them, or anyone for whose acts any of them may be liable, Grantee's indemnification obligation shall not be limited in any way by any limitation on the amount or type of damage, compensation, or benefits payable by or for Grantee or any contractor under any industrial insurance act, workers' compensation act, disability benefit act, or other employee benefit act, and Grantee hereby expressly waives any immunity it may have under such acts to the extent necessary or permitted under the law to assure the validity and enforceability by Grantor of Grantee's aforesaid indemnification obligation.

(c) Notwithstanding anything to the contrary in this Agreement, the Parties hereby waive any claims that each may have against the other with respect to business interruption, consequential, incidental, or special damages. This waiver does not include claims for property damage.

7. **ENVIRONMENTAL.** In the event of a spill or release of Hazardous Materials, Grantee shall promptly comply with all federal, state and local spill notification and response requirements and shall notify Grantor of the spill event. Grantee shall be responsible for the response and restoration costs of any release of Hazardous Materials in connection with the Agreement, and shall indemnify, defend and hold harmless Grantor from any liability arising from claims or damages in connection with such release. "Hazardous Materials" shall mean any pollutant, contaminant, chemical or hazardous, toxic, or dangerous waste, substance, chemical or material, or any other substance or material regulated or controlled pursuant to any environmental laws now or at any time hereafter in effect.

8. **TAXES.** Grantee shall pay Grantor annually, within thirty (30) days after Grantor's delivery of an invoice to Grantee, half of the real estate taxes and assessments for the tax parcel in which the Easement Area is located, provided, however, that Grantee shall pay all increases in real estate taxes and assessments for the tax parcel in which the Easement Area is located after the tax year in which this Agreement is made, except to the extent that the increases are attributable to expansions of the tax parcel or new improvements or land uses established by Grantor within the tax parcel.

9. **LIENS.** Grantee shall keep the Easement Area free from any liens or encumbrances arising out of any work performed by Grantee, materials furnished to Grantee, or obligations incurred by Grantee. Grantor shall have the right to pay and discharge any lien imposed against the Property due to Grantee's breach of the aforesaid covenant. Grantee shall reimburse Grantor for the amount so paid, including the reasonable expenses of Grantor in connection therewith, within thirty (30) days of receiving notice from Grantor of any such payment with interest thereon at the rate of seven (7) percent per annum from the date of payment thereof by Grantor until the repayment thereof by Grantee. If Grantor exercises the option to make such payments, it shall not be obligatory on Grantor to inquire into the validity of any such lien unless Grantee shall have given notice to Grantor that said lien was being challenged and shall have furnished to Grantor the bond of a surety company or other security satisfactory to Grantor, in an amount satisfactory to Grantor, securing Grantor against the payment of the lien so contested and against any loss, damage, or penalty arising from Grantee's failure to pay it.

10. **INSURANCE.** Grantee, at its expense, shall procure insurance with companies satisfactory to Grantor covering Grantee against risks and with minimum limits as indicated below:

(a) Workers' Compensation (Statutory amount) and Employer's Liability ($1,000,000).

(b) Commercial General Liability insurance of $2,000,000 combined single limit Bodily Injury and Property Damage each occurrence. Extensions of coverage to include Contractual Liability, Products and Completed Operations, Cross Liability, and Pollution arising out of heat, smoke or fumes from Hostile Fires. Additionally, the policy shall not exclude X, C or U (Explosion, Collapse, or Underground).

(c) Commercial Automobile Liability insurance with minimum limits of $1,000,000 per occurrence combined single limit of Bodily Injury and Property Damage coverage. Coverage shall extend to all owned, hired, or non-owned vehicles.

(d) The policies specified in (b) and (c) above shall include an endorsement that shall name ORM Timber Operating Company II, LLC, Olympic Resource Management LLC, and their employees, officers, directors, and agents as additional insureds on a primary basis for the duration of this Agreement. The additional insured endorsement must be ISO CG 20 26 11 85 (or other form with like wording). Additional insured status gives the additional insured rights of indemnity under the policies that are independent of the contractual requirement to indemnify. If any affiliate, successor, or assign of Grantee shall acquire an interest in the Property, or shall become engaged in the development, management, or operation of the Property, then the additional insured endorsement shall be amended or replaced to name such affiliate, successor, or assign.

(e) The policies specified in (a) – (c) above shall provide that Grantor be given a thirty (30)-day written notice prior to cancellation of the policy.

(f) All liability coverage must be on an "occurrence" basis as opposed to "claims made."

(g) All insurance shall be in a form sufficient to protect Grantee and Grantor against the claims of third persons, and to cover claims by Grantor against Grantee for which the Grantee has assumed liability under this Agreement.

(h) Prior to commencement of the use hereunder, and following each permitted transfer, assignment or conveyance of this easement, Grantee or its permitted successors and assigns shall furnish Grantor with certificate(s) of insurance, dated and signed by a stated, authorized agent for the insuring company or companies, and containing a representation that coverage of the types listed above is provided with the required limits. Grantor reserves the right to require a certified copy of the policies or to examine the actual policies. Said certificates shall be sent to Grantor at the address contained herein.

(i) Grantor may reevaluate the minimum limits required on the foregoing policies and may, not more often than once every five years, adjust those limits to reflect industry standards and risks. Grantor shall provide written notification to Grantee and Grantee shall cause the coverage to be so adjusted and provide proof of adjustment to Grantor within thirty (30) days after such notification.

11. <u>TERMINATION OR ABANDONMENT</u>. All rights of Grantee hereunder shall terminate upon Grantee's use of the Easement Area for any purposes other than the Authorized Use. Termination of this Agreement shall not prejudice Grantor's right to collect damages accrued theretofore or thereafter accruing, on account of Grantee's breach of any term hereof; and any failure to exercise the right to terminate this Agreement in case of default shall not constitute a waiver of Grantee's obligation to perform strictly in accordance with the term hereof. Upon termination the easement conveyed in this Agreement shall revert to and merge with the interests of Grantor, its successors or assigns. In the event Grantee or its successors and assigns cease to use the easement conveyed in this Agreement for a period of three (3) successive years, this Agreement and all of Grantee's rights hereunder shall automatically terminate and revert to and merge with the interests of Grantor, its successors or assigns. Upon abandonment or other termination, Grantee shall remove the improvements constructed on the Easement Area unless Grantor agrees in writing that Grantee may instead abandon the improvements in place, and Grantee shall repair any damage to the Easement Area caused by such removal or abandonment. Upon such abandonment or termination, Grantee agrees to execute and deliver such documents as may be

required to extinguish of record such easement.

12. REMOVAL/RESTORATION.

(a) Grantee agrees that within a reasonable time following the completion of its initial Facilities construction and installation work it shall restore the Temporary Easement area to its original contour and conditions. Grantee agrees to compensate Grantor adequately for damages that directly or indirectly result from its work in the Temporary Easement area, including loss of timber. Any other recognizable damages to other real or personal property that resulted from its work shall be repaired by Grantee, or Grantor shall be compensated for such repairs.

(b) In the event of termination of this Agreement Grantee shall, at Grantee's cost, restore the Easement Area to the conditions that existed before the Agreement. Grantee shall repair all damage and deterioration of the road or road segments caused by its use, and remove all debris from road surfaces and drainage structures. During the term of this Agreement all portions of the Facilities brought onto the Property by Grantee will be and remain Grantee's personal property and, at Grantee's option, may be removed by Grantee at any time. In the event of any termination of this Agreement, Grantor may, by written notice to Grantee within fifteen (15) days of the termination, elect to retain as Grantor's own property all Facilities fixtures. If Grantor does not elect to retain Facilities fixtures with a written notice to Grantee, Grantee shall remove all such Facilities fixtures and improvements within one hundred twenty (120) days of the termination of this Agreement, and Grantor will allow use of the Temporary Construction Area for the purposes of removal, subject to Grantee's restoration obligations in subparagraph (a) of this Paragraph.

13. DEFAULT AND RIGHT TO CURE.

(a) The following will be deemed a default by Grantee and a breach of this Agreement: (1) Grantee becomes insolvent, or makes any transfer in fraud of creditors, or makes an assignment for the benefit of creditors; (2) Grantee files a petition under any section or chapter of any applicable federal or state bankruptcy or insolvency law, or is adjudged bankrupt or insolvent in proceedings filed against Grantee; (3) a receiver or trustee is appointed for all or substantially all of the assets of Grantee; (4) Grantee does or permits to be done anything that creates a lien upon the Property and the lien is not removed or bonded around within thirty (30) days after written notice thereof from Grantor to Grantee; or (5) Grantee's failure to perform any other term or condition under this Agreement within thirty (30) days after receipt of written notice from Grantor specifying the failure; provided that no such failure will be deemed to exist if Grantee has commenced to cure such default within such period and provided that such efforts are prosecuted to completion with reasonable diligence, and delay in curing a default will be excused if due to causes beyond the reasonable control of Grantee. If Grantee remains in default beyond any applicable cure period, Grantor will have the right to exercise any and all rights and remedies available to it under law and equity.

(b) The following will be deemed a default by Grantor and a breach of this Agreement: Grantor's failure to perform any term or condition under this Agreement within thirty (30) days after receipt of written notice from Grantee specifying the failure; provided that no such failure will be deemed to exist if Grantor has commenced to cure the default within such period and provided such efforts are prosecuted to completion with reasonable diligence, and delay in curing

a default will be excused if due to causes beyond the reasonable control of Grantor. If Grantor remains in default beyond any applicable cure period, Grantee will have the right to exercise any and all rights available to it under law and equity.

14. NOTICES. All notices, requests, demands and communications hereunder will be given by first-class certified or registered mail, return receipt requested, or by a nationally recognized overnight courier, postage prepaid, to be effective when properly sent and received, refused or returned undelivered. Notice will be addressed as follows:

As to Grantee:

City of Rockaway Beach
Attention: City Manager
Post Office Box 5
Rockaway Beach, Oregon 97136

as to Grantor:

ORM Timber Operating Company II, LLC
c/o Olympic Resource Management, its timberland manager
Attn: Timberland Management
19245 Tenth Avenue NE
Poulsbo WA 98370

Phone: 360-697-6626
Fax: 360-697-1156

Either Party hereto may change the place for the giving of notice to it by thirty (30) days' prior written notice to the other as provided herein.

15. INTERPRETATION.

(a) This Agreement shall be governed by and construed in accordance with the laws of the State of Oregon, without regard to the conflicts of law principles of such state.

(b) A Party's waiver of any right hereunder or of the other Party's breach or failure to perform shall not be deemed a waiver of any other right hereunder or of any other breach or failure by the other Party, whether of a similar nature or otherwise.

(c) If any term or condition of this Agreement is found unenforceable, the remaining terms and conditions will remain binding upon the Parties as though said unenforceable provision were not contained herein. However, if the invalid, illegal or unenforceable provision materially affects this Agreement then the Agreement may be terminated by either Party on ten (10) days' prior written notice to the other Party hereto.

(d) Terms and conditions of this Agreement which, by their sense and context, survive the termination, cancellation, or expiration of this Agreement, including, but not limited to, Grantee's obligations under Paragraphs 6, 7, 10 and 16, shall so survive.

(e) This Agreement constitutes the entire agreement of the Parties with respect to the matters described herein and supersedes all prior written or oral negotiations or agreements with respect thereto. Each Party acknowledges that no representations, inducements, promises, or agreements, orally or otherwise, have been made by either party, or anyone acting on behalf of either party, which are not embodied herein, and that no other agreement, statement or promise not contained in this Agreement shall be valid or binding. Any modification of this Agreement will be effective only if it is in writing signed by both parties, and the amended Agreement remains subject to the enforcement provisions of this Agreement.

(f) This Agreement shall bind and inure to the benefit of the successors, personal representatives, and permitted assignees of the respective Parties.

(g) Each of the Parties hereto has been or has had the opportunity to be represented, to the extent desired, by legal counsel of its choice in respect to this transaction. No provision of this Agreement shall be construed against one party as the drafter of the Agreement for that provision.

(h) Unless otherwise specified, the following rules of construction and interpretation apply: (1) captions are for convenience and reference only and in no way define or limit the construction of the terms and conditions hereof; (2) use of the term "including" will be interpreted to mean "including but not limited to"; (3) exhibits are an integral part of this Agreement and are incorporated by reference into this Agreement; (4) use of the terms "termination" or "expiration" are interchangeable; and (5) reference to a default will take into consideration any applicable notice, grace and cure periods.

16. ENFORCEMENT.

(a) If an action is instituted to enforce any of the terms, covenants, conditions or agreements contained in this Agreement or if an action is commenced because of any breach hereof, then the prevailing party in such action shall be entitled to all of its costs and reasonable attorneys' fees as fixed by the trial and appellate courts in said action.

(b) Grantee and Grantor hereby expressly and irrevocably waive all right to a trial by jury in any action, proceeding, claim, counterclaim or other litigation arising out of or relating to the Agreement or any of the activities or events referenced in this Agreement.

17. EXECUTION.

(a) Unless otherwise provided herein, this Agreement shall be effective on the last date of execution by the undersigned parties. This Agreement shall not be binding upon either Party until signed and acknowledged by each Party.

(b) Each of the undersigned represents that they have sufficient authority to execute this binding Agreement on behalf of the Party they represent.

IN WITNESS WHEREOF, the undersigned has caused this Agreement to be executed as below subscribed.

"Grantor"

ORM Timber Operating Company II, LLC
A Delaware LLC, By Olympic Resource
Management, LLC, Its managing partner

By: _____
Print Name: David L. Nunes
Its: President and CEO
Date: September 30, 2010

"Grantee"

_____

By: _____
Print Name: CLIFFORD T. JENSEN
Its: CITY MANAGER
SEPTEMBER 9, 2010

STATE OF WASHINGTON
COUNTY OF KITSAP

On Septmber 30, 2010 before me, Susan M. Graham-Schuyler, personally appeared David L. Nunes personally known to me (or proved to me on the basis of satisfactory evidence) to be the person(s) whose name(s) is/are subscribed to the within instrument and acknowledged to me that he/she/they executed the same in his/her/their authorized capacity(ies), and that by his/her/their signature(s) on the instrument the persons), or the entity upon behalf of which the person(s) acted, executed the instrument.

Witness my hand and official seal.

Signature Susan M. Graham-Schuyler
Susan M. Graham-Schuyler

SUSAN M. GRAHAM SCHUYLER
COMMISSION EXPIRES
NOTARY
PUBLIC
05-20-14
STATE OF WASHINGTON

STATE OF OREGON
COUNTY OF Tillamook

On September 9, 2010 before me, ROBIN A White, personally appeared Clifford T Jensen personally known to me (or proved to me on the basis of satisfactory evidence) to be the person(s) whose name(s) is/are subscribed to the within instrument and acknowledged to me that he/she/they executed the same in his/her/their authorized capacity(ies), and that by his/her/their signature(s) on the instrument the persons), or the entity upon behalf of which the person(s) acted, executed the instrument.

Witness my hand and official seal.

Signature Robin A White

OFFICIAL SEAL
ROBIN A WHITE
NOTARY PUBLIC-OREGON
COMMISSION NO. 445295
MY COMMISSION EXPIRES DECEMBER 22, 2013

EXHIBIT A
EASEMENT AREA

Parcel 1 - Permanent Easement for Water Service Lines, Fixtures, Impoundments and Facilities

A parcel of land lying in the SE 1/4 of Section 17, Township 2 North, Range 10 West, W.M. Tillamook County, Oregon and being that property described in that Statutory Bargain and Sale Deed to Simpson Resource Company, recorded November 14, 2002 in Book 441, Page 329 of Tillamook County Record of Deeds; the said parcel being that portion of said property described as follows:

Beginning at a point that is 1554.61 feet North and 459.32 feet West of the section corner common to sections 16, 17, 20 and 21, Township 2 North, Range 10 West, W.M. thence North 14°50'04" West, 127.50 feet; thence North 50°25'00" East, 172.07 feet; thence North 36°34'03" East, 90.46 feet; thence North 49°03'34" East, 130.47 feet; thence South 61°45'50" East, 48.39 feet; thence South 01°28'16" West, 45.08 feet; thence South 72°34'17" West, 50.00 feet; thence South 12°47'45" West, 64.60 feet; thence South 30°49'57" West, 329.00 feet; thence North 73°46'53" West, 133.88 feet to the true point of beginning.

This parcel contains 56,125 square feet, more or less. (1.29 Acres±)

Parcel 2 - Permanent Easement for Water Service, Electric, and Communication Lines, Fixtures and Facilities and for Nonexclusive Road Access

A parcel of land lying in the SE 1/4 of Section 17, Township 2 North, Range 10 West, W.M. Tillamook County, Oregon and being that property described in that Statutory Bargain and Sale Deed to Simpson Resource Company, recorded November 14, 2002 in Book 441, Page 329 of Tillamook County Record of Deeds; the said parcel being that portion of said property lying 15 feet on each side of the center line described as follows:

Beginning at a point that is 1554.61 feet North and 459.32 feet West of the section corner common to sections 16, 17, 20 and 21, Township 2 North, Range 10 West, thence North 14°50'04' East, 105.00 feet to the True Point of Beginning; thence North 73°29'56" West, 158.00 feet; thence North 38°19'56" West, 164.00 feet; North 72°29'56" West, 206.00 feet, more or less to the easterly right of way line of U.S. Highway 101 and the point of terminus of this center line description.

Excepting there from that portion lying within Parcel 1.

Extend and truncate sidelines as necessary to terminate on the said right of way lines. This parcel contains 15,840 square feet, more or less. (0.36 Acres±)

Parcel 3 - Temporary Easement for Work Area (5 years or completion of Facilities improvements, whichever is sooner)

A parcel of land lying in the SE 1/4 of Section 17, Township 2 North, Range 10 West, W.M. Tillamook County, Oregon and being that property described in that Statutory Bargain and Sale Deed to Simpson Resource Company, recorded November 14, 2002 in Book 441, Page 329 of Tillamook County Record of Deeds; the said parcel being that portion of said property as described as follows:

Beginning at a point that is 1554.61 feet North and 459.32 feet West of the section corner common to sections 16, 17, 20 and 21, Township 2 North, Range 10 West, W.M. thence North 14°50'04" West, 127.50 feet; thence North 50°25'00" East, 172.07 feet; thence North 36°34'03" East, 90.46 feet; thence North 49°03'34" East, 130.47 feet; thence South 61°45'50" East, 48.39 feet; thence South 01°28'16" West, 45.08 feet to the true point of beginning;
thence South 72°34'17" West, 50.00 feet; thence South 12°47'45" West, 64.60 feet; thence South 30°49'57" West, 198.24 feet; thence North 79°10'12" East, 25.83 feet; thence North 62°15'15" East, 60.00 feet; thence North 34°33'20" East, 65.00 feet; thence North 16°36'25" East 168.92 feet to the true point of beginning.

This Parcel contains 11,865 square feet, more or less. (0.27 Acres±)

(T2N, R10W, S17, TL 107)

Parcel 4 - Permanent Easement for Water Service, Electric, and Communication Lines, Fixtures, and Facilities

A parcel of land lying in the SE 1/4 of Section 17, Township 2 North, Range 10 West, W.M. Tillamook County, Oregon and being that property described in that Statutory Bargain and Sale Deed to Simpson Resource Company, recorded November 14, 2002 in Book 441, Page 329 of Tillamook County Record of Deeds; the said parcel being that portion of said property lying 10.00 feet each side of the center line, described as follows:

Beginning at a point that is 1554.61 feet North and 459.32 feet West of the section corner common to Sections 16, 17, 20 and 21, Township 2 North, Range 10 West, W.M. thence North 14°50'04" West, 105.00 feet; thence North 73°29'56" West, 158.00 feet; thence North 38°19'56" West, 105.45 feet to the true point of beginning; thence South 60°51'33" West, 35.00 feet; thence South 28°43'18" West, 154.15 feet; thence North73°09'44" West, 132.00 feet; thence South 73°09'44" East, 132.00 feet; thence South 28°43'18" West, 401.00 feet to the point of terminus of this center line description;

This parcel contains 14,245 square feet, more or less. (0.33 Acres±)

(T2N, R10W, S17, TL 107)

Attachment D: Tribal Communication

Jetty Creek Fish Passage Restoration
Lower Nehalem Watershed Council

OWRD Water Supply Development Account
Loan and Grant Application

From: Jordan Mercier <Jordan.Mercier@grandronde.org>
Date: December 3, 2015 at 10:41:22 AM PST
To: "'denise.confluence@peak.org'" <denise.confluence@peak.org>
Subject: RE: Jetty Creek Fish Passage Project

Good Morning,

The Confederated Tribes of Grand Ronde Cultural Protection Program has reviewed the proposed project [Jetty Creek Fish Passage Project] for its potential to impact cultural resources. The project area of potential effect does not appear to have been formally surveyed for cultural resources, and cultural resources are present in the vicinity of the project area. Numerous cultural sites including villages are known ethnographically and archaeologically throughout the area. Because the project area has not been surveyed there is a potential for the proposed project to inadvertently impact cultural resources. I recommend you contract an archaeology firm to survey the area. Based on the results of the study we can better understand the potential to impact cultural resources. Another option is to contract an archaeological monitor to be on-site during ground disturbing activities. In addition to survey/monitoring, there should be an Inadvertent Discovery Plan in place for the project that contains proper protocols and procedures to follow in the event of an inadvertent discovery. Please contact me if you have any questions.

Respectfully,
Jordan

Jordan Mercier
Cultural Protection Coordinator
Tribal Historic Preservation Department
Confederated Tribes of the Grand Ronde Community of Oregon

Jordan.Mercier@grandronde.org
503-879-2185

From: Denise Hoffert [mailto:denise.confluence@peak.org]
Sent: Friday, November 20, 2015 1:03 PM
To: rkentta@ctsi.nsn.us; mikek@ctsi.nsn.us; Mike Wilson; David Harrelson
Cc: 'Lower Nehalem Watershed Council'
Subject: Jetty Creek Fish Passage Project

Hello,

My name is Denise Hoffert; I am contacting you on behalf of the Lower Nehalem Watershed Council regarding a project we are undertaking with the City of Rockaway Beach to improve fish passage at their municipal water treatment facility on Jetty Creek. The project will address fish passage at the City's impoundment by creating a natural channel that will bypass the raw water storage pond and intake, effectively moving the impoundment off channel and redirecting the flow into a historic channel. The project will also expand the City's raw water storage pond and install a fish screen at the City's point of diversion.

The project has received funding from the Oregon Watershed Enhancement Board, Oregon Department of Fish and Wildlife Fish Screen cost-share program, Oregon Department of Fish and Wildlife Restoration and Enhancement Program, and from the City of Rockaway Beach. We are starting the contract bidding, permitting, and materials acquisition phase of the project this winter and are scheduled to go to construction in summer 2016. We are also in the process of applying for additional funding from the Oregon Water Resources Department's (OWRD) Water Supply Development Account.

As part of OWRD's application process, I am contacting you notify you about this project. The project is located on Jetty Creek, just upstream from the mouth of the Nehalem River in Tillamook County (about two miles north of the City if Rockaway Beach). The Township, Range, Section, Quarter-Quarter Section is T2N R10W Sec17 NE,SE and the Latitude/Longitude is 45.6573/-123.9264.

Attached to this message is the design planset. The fish screen is being re-designed by ODFW and that detail is not available at this time. However, the project footprint and other project elements are remaining as they are in this planset.

Please let me know if there is any additional information you need to evaluate this project and provide comments.

Denise

****

Denise Hoffert, Project Manager
Confluence Consulting

Ring: 541.619.5896
Email: denise.confluence@peak.org

Attachment E: Project Budget

Jetty Creek Fish Passage Restoration
Lower Nehalem Watershed Council

OWRD Water Supply Development Account
Loan and Grant Application

ATTACHMENT G: PROJECT BUDGET

OWRD Water Supply Development Account

Loan and Grant Application

Section B - Project Budget

JETTY CREEK FISH PASSAGE PROJECT - Lower Nehalem Watershed Council

A	B	C	D	E	F	G
Line Items	**Number of Units* (e.g. # of Hours)**	**Unit Cost (e.g. hourly rate)**	**In-kind Match**	**Cash Match Funds**	**OWRD Funds**	**Total Costs**
MATERIALS						
	0	$0	$0	$0	$0	$0
SUBTOTAL			**$0**	**$0**	**$0**	**$0**
CONTRACTED SERVICES						
Final engineering design, prepare project bid book (HBH Engineering) (hrs)	80	$125	$0	$10,000		$10,000
Electrical panel design/connect to power	lump sum	$10,000	$0	$10,000		$10,000
Bid process and award (HBH Engineering) (hrs)	32	$125	$0	$4,000		$4,000
Construction inspection (HBH Engineering) (hrs)	80	$88	$0	$7,040		$7,040
Construction management (HBH Engineering) (hrs)	80	$125	$0	$10,000		$10,000
Creek restoration construction management (sub-contractor with specialty in river restoration)	120	$125	$0	$15,000		$15,000
Project Management and permitting (Confluence Consulting) (hrs)	368	$65	$0	$10,400	$13,520	$23,920
Lower Nehalem Watershed Council Volunteers	60	$25	$1,500	$0		$1,500
City of Rockaway Beach perfecting City's water right and completing POD transfer application	lump sum	$8,100	$8,100	$0		$8,100
City of Rockaway Beach (hrs)	80	$35	$2,800	$0		$2,800
Oregon Department of Fish and Wildlife (hrs)	lump sum		$4,450	$0		$4,450
Equipment mobilization (lump sum)	lump sum	$10,000	$0	$10,000		$10,000
Erosion control (lump sum)	lump sum	$8,000	$0	$8,000		$8,000
Dam and fish ladder structural revisions (lump sum)	lump sum	$7,000	$0	$7,000		$7,000
Excavation (cubic yards)	11000	$10	$0	$96,670	$13,330	$110,000
Stream channel construction (hrs)	100	$120	$0	$12,000		$12,000
Backhoe with operator (hrs)	100	$120	$0	$12,000		$12,000
Clearing, grubbing and demo (lump sum)	lump sum	$8,000	$0	$8,000		$8,000
Dewater (lump sum)	lump sum	$10,000	$0	$10,000		$10,000
Fence relocation (lump sum)	lump sum	$1,200	$0	$1,200		$1,200
Re-vegetation of all disturbed areas	lump sum	$3,500	$0	$3,500		$3,500
Native Plant Materials	1000	$4			$4,000	$4,000
Native Plant Installation and Maintenance	lump sum	$6,000			$6,000	$6,000
Large boulders 3-ft diameter (per boulder)	50	$400	$0	$20,000		$20,000
Medium boulders 1.5-ft diameter (per boulder)	20	$300	$0	$6,000		$6,000
Gravel/sand to wash into fishway to seal the surface	lump sum	$10,000	$0	$10,000		$10,000
Large wood (trees, no rootwad)	20	$200	$0	$4,000		$4,000
Flow level sensors	2	$2,500	$0	$5,000		$5,000
Temporary diesel pump for drinking water (lump sum)	lump sum	$21,100	$21,100	$0		$21,100
HDPE Liner (60 ml) including 2" sand base (per sq ft)	14200	$3	$0	$29,050	$10,000	$39,050
Aggregate base for access road (cubic yards)	150	$14	$0	$2,100		$2,100
Retaining wall (sq ft)	1540	$22	$0	$33,880		$33,880
Sediment Hauling	lump sum	$37,227	$0	$37,227		$37,227
Archeaology	lump sum	$7,000	$0	$7,000		$7,000
ODFW Fish Screens Leadworker	440	$38	$9,215	$7,505		$16,720
ODFW Fish Screens Technician	440	$35	$10,400	$5,000		$15,400
ODFW Fish Screens Technician	440	$35	$10,400	$5,000		$15,400
ODFW Fish Screens Leadworker (Wier Box)	200	$38	$7,600	$0		$7,600
ODFW Fish Screens Technician (Wier Box)	200	$35	$7,000	$0		$7,000
ODFW Fish Screens Technician (Wier Box)	200	$35	$7,000	$0		$7,000
Concrete	35	$150	$0	$5,250		$5,250
Rebar	115	$15	$0	$1,725		$1,725
Concrete Forming Materials	lump sum	$3,000	$0	$3,000		$3,000
3/4 crushed gravel	15	$20	$0	$300		$300
Steel for screen components	lump sum	$4,500	$0	$4,500		$4,500

Fish screen cleaning components	lump sum	$5,000	$0	$5,000		$5,000
Wedge wire panel	1	$500	$0	$500		$500
Grating for screenbox cover	1	$1,000	$0	$1,000		$1,000
Concrete (Wier Box)	13	$150	$0	$1,950		$1,950
Concrete supplies, Rebar, Form Ply, Wire Ties, Snap Ties, Etc. (Wier Box)	lump sum	$2,150	$0	$2,150		$2,150
Grating cover ((Wier Box)	1	$1,000	$0	$1,000		$1,000
18" Waterman Headgate (Weir Box/Water Control)	1	$2,000	$0	$2,000		$2,000
Access Ladder (Wier Box)	1	$150	$0	$150		$150
Stainless Steel Plate, 1/4" 304 alloy (Wier Box)	1	$660	$0	$660		$660
Access Ladder for Screen Box	1	$150	$0	$150		$150
Dump Truck Fuel	100	$4	$400	$0		$400
Excavator Fuel	100	$4	$400	$0		$400
ODFW Service Truck	2500	$1	$1,438	$0		$1,438
Concrete Pump Truck	lump sum	$1,500	$1,500	$0		$1,500
Perdiem for ODFW construction crew	lump sum	$10,918	$10,918	$0		$10,918
Perdiem for ODFW construction crew (Wier Box)	lump sum	$8,730	$8,730	$0		$8,730
Fiscal Administration	250	$30		$5,000	$5,000	$10,000
SUBTOTAL			**$112,950**	**$440,907**	**$51,850**	**$605,707**
SALARIES, WAGES AND BENEFITS						
Lower Nehalem Watershed Council Coordinator (hrs)	240	$35	$0	$4,200	$4,200	$8,400
Post-Implementation Status Reporting ($3,500 or less)	3/yr	$750	$0	$2,250		$2,250
SUBTOTAL			**$0**	**$6,450**	**$4,200**	**$10,650**
EQUIPMENT						
	0	$0	$0	$0	$0	$0
SUBTOTAL			**$0**	**$0**	**$0**	**$0**
SUPPLIES						
	0	$0	$0	$0	$0	$0
SUBTOTAL			**$0**	**$0**	**$0**	**$0**
OTHER						
Permit fees (Tillamook County, LUCS, DSL removal/fill)	3	$750		$2,250	$0	$2,250
SUBTOTAL			**$0**	**$2,250**	**$0**	**$2,250**
		Total for Section B	**$112,950**	**$449,607**	**$56,050**	**$618,607**
		Percentage for Section B	**18%**	**73%**	**9%**	**100%**

Attachment F: Jetty Creek Impoundment Improvements and Stream Restoration Feasibility Study

HBH Consulting Engineers

PART 1

Jetty Creek Fish Passage Restoration
Lower Nehalem Watershed Council

OWRD Water Supply Development Account
Loan and Grant Application

PLEASE SEE SEPARATE ATTACHMENT

Attachment F: Jetty Creek Impoundment Improvements and Stream Restoration Feasibility Study

HBH Consulting Engineers

PART 2

Jetty Creek Fish Passage Restoration
Lower Nehalem Watershed Council

OWRD Water Supply Development Account
Loan and Grant Application

PLEASE SEE SEPARATE ATTACHMENT

Attachment G: Jetty Creek Impoundment Improvements Design Sheets

HBH Consulting Engineers

Jetty Creek Fish Passage Restoration
Lower Nehalem Watershed Council

OWRD Water Supply Development Account
Loan and Grant Application

PLEASE SEE SEPARATE ATTACHMENT

Attachment H: Jetty Creek Fish Screen Design Sheets

OR Dept. of Fish and Wildlife

Jetty Creek Fish Passage Restoration
Lower Nehalem Watershed Council

OWRD Water Supply Development Account
Loan and Grant Application

PLEASE SEE SEPARATE ATTACHMENT

Attachment I: Photos

Jetty Creek Fish Passage Restoration
Lower Nehalem Watershed Council

OWRD Water Supply Development Account
Loan and Grant Application

PLEASE SEE SEPARATE ATTACHMENT

Attachment F: Jetty Creek Impoundment Improvements and Stream Restoration Feasibility Study

HBH Consulting Engineers

PART 1

Jetty Creek Fish Passage Restoration
Lower Nehalem Watershed Council

OWRD Water Supply Development Account
Loan and Grant Application

City of Rockaway Beach

Tillamook County, Oregon

JETTY CREEK IMPOUNDMENT IMPROVEMENTS & STREAM RESTORATION PROJECT FEASIBILITY STUDY

September 2010

Project No. 2004-027.17

REGISTERED PROFESSIONAL ENGINEER
10,443
OREGON
JULY 13, 1979
MICHAEL D. HENRY
EXPIRES 6/30/11

Prepared By:

HBH Consulting Engineers

20055 SW Pacific Hwy, Suite 102
Sherwood, Oregon 97140
503.625.8065
fax 503.625.1531
mail@hbh-consulting.com

TABLE OF CONTENTS

EXECUTIVE SUMMARY **1**

SECTION 1 - INTRODUCTION **3**
1.1 Study Objectives 3
1.2 Study Authorization 3
1.3 Project Background & Need 4
1.4 Project Description 4
1.5 Project Goals & Criteria 5

SECTION 2 - STUDY AREA **7**
2.1 General Watershed Description 7
Climate 7
Soils 15
Geology 15
Vegetation 16
Land Use 16
2.2 Project Site Description 21
Existing Impoundment 21
Relict Creek Channel 22

SECTION 3 - GEOLOGICAL INVESTIGATION **29**
3.1 Geologic Setting 29
Material 29
Bedrock 29
Slope Stability 29
3.2 Geotechnical Recommendations 30

SECTION 4 - HYDRAULIC ANALYSIS **31**
4.1 Site Hydrologic Characteristics 31
Jetty Creek Watershed 31
Stream Flow Analysis 31
4.2 Hydraulic Model 34
HEC-RAS 34
Model Development & Assumptions 34
Results 35

SECTION 5 - BIOLOGICAL RESOURCES **37**
5.1 Special-Status Species 37
5.2 Oregon Cost Coho Salmon 38
Distribution & Population Levels 39
Primary Constituent Elements (PCEs) in Project Vicinity 40
Potential Direct Impacts of Project 40
Mitigation 42

SECTION 6-WATER RIGHTS ANALYSIS 45
6.1 Existing Water Rights 45
Existing City Water Rights 45
In-Stream Water Right 46
6.2 Jetty Creek Source Adequacy & Reliability 46
6.3 Impact of Project on Water Rights 48
Transferring Water Rights 49
New Water Right 49
Partial Perfection of Water Right 51
Recommendation 51

SECTION 7 - ALTERNATIVE ANALYSIS 53
7.1 Design Development 53
Design Objectives 53
State & Federal Fish Passage Requirements 54
7.2 Fish Protection Screen Alternatives 56
Flat Plate Screen 57
Drum Screen 57
Traveling screens 58
Submerged Inclined Screens 59
Horizontal Flat Plate Screens 60
Coanda Screens 61
Summary 62
7.3 Screen Location 64
Siting Options 64
7.4 Alternative Design Development 66
Initial Assessment 66
Alternative 1 - Flat Plate Screen 67
Alternative 2 - Traveling Belt Screen 71
Alternative 3 - Farmers Screen 75
Alternative Recommendation 76

SECTION 8 - CONCLUSION 79
8.1 Summary of Findings 79
Site Conditions 79
Hydrology 79
Impacts on Biological Resources 79
Water Rights 80
Final Design 80
8.2 Permitting 81
Joint Remove-Fill Permit 81
Clean Water Act (CWA), Section 401 Certification 83
Archeological & Cultural Review 83
Tillamook County Permits 83
8.3 Final Project Implementation 84
Additional Studies & Tasks 84
Total Project Cost 84
Project Timeline 85
Project Funding 85

TABLE OF FIGURES

Figure 2-1- Monthly Temperature Summary 7
Figure 2-2 - Annual Precipitation (1949 – 2007) 8
Figure 2-3 – Monthly Precipitation Summary (1949-2007) 8
Figure 2-4– Location Map 9
Figure 2-5 – Vicinity Map 11
Figure 2-6 – Jetty Creek Watershed 13
Figure 2-7 – Soil Map 17
Figure 2-8 – Geologic Map 19
Figure 2-9 – Existing and Proposed Surface of Relict Creek 23
Figure 2-10 – Existing Conditions 25
Figure 2-11 – Preliminary Layout 27
Figure 4-1 – Monthly Average Daily Steam Flows (Nov 1975 - Sept 1995) 32
Figure 4-2 - Flow Duration Curve (Nov 1975 - Sept 1995) 32
Figure 4-3 – Creek Velocities 35
Figure 4-4 – Water Surface Elevation vs. Streamflow 36
Figure 6-1 – Jetty Creek Stream Flows vs. Water Demands 47
Figure 6-2 – Percent of Days where Stream Flows meet City's 1.0 cfs Water Right 50
Figure 7-1 - Flat plate screen "V" configuration 57
Figure 7-2 – Sectional View of Drum Screens 58
Figure 7-3 – Traveling Screen 59
Figure 7-4 – Fixed Incline Screen 60
Figure 7-5 – Horizontal Flat Plate Screen 61
Figure 7-6 –Coanda Screen 62
Figure 7-7 – Flat Plate Screen Design 69
Figure 7-8 – Traveling Belt Screen Design 73
Figure 7-9 – Farmers Screen Design 77
Figure 8-1 – Proposed Project Timeline 85

TABLE OF TABLES

Table 2-1 – Summary of Soil Properties 15
Table 2-2 – Rock Type Descriptions 16
Table 4-1 –Basin Characteristics[1] 31
Table 4-2 – Jetty Creek Monthly Stream Flow Statistics[1] 33
Table 4-3 – Peak Flows for Jetty Creek[1] 33
Table 4-4 – Restored Channel Characteristics 34
Table 5-1 – Special-Status Species in Project Vicinity 38
Table 5-2 –PCEs & Affected Life History Event in All OC Coho Salmon Critical Habitat 40
Table 6-1 – Summary of the City of Rockaway Beach's Water Rights 45
Table 6-2 - Seasonal In-Stream Water Right 46
Table 6-3 – Summary of Water Demands & Jetty Creek Reliability 47
Table 6-4 – Impact of New Water Right Priority 50
Table 7-1 - Summary of Fish Screen Criteria (Juvenile Salmonids – NMFS Northwest Region) 55
Table 7-2 – Positive Barrier Screen Alternatives 56
Table 7-3 – Summary of Screening Alternatives 63
Table 7-4 – Summary of Diversion Site Alternatives 65
Table 7-5 – Initial Assessment Matrix 67
Table 7-6 – Flat Plate Screen Cost Estimate 68
Table 7-7 – Traveling Belt Screen Cost Estimate 72
Table 7-8 – Farmers Screen Cost Estimate 75
Table 8-1 – Total Preliminary Project Cost Estimates 84
Table 8-2 – Potential Funding Sources 86

APPENDICES

Appendix A ..... Soil Properties
Appendix B ..... Geotechnical Report & Drill Logs
Appendix C ..... Monthly Flow Duration Curves
Appendix D ..... HEC-RAS Model Results
Appendix E ..... Biological Correspondence
Appendix F ..... Special Species Lists
Appendix G ..... Water Rights
Appendix H ..... Fish Passage & Screening Criteria

EXECUTIVE SUMMARY

The City of Rockaway Beach is proposing an innovative solution to resolve a number of issues affecting the quality and quantity of the raw water available in its impoundment pond. In its existing configuration, all flows from Jetty Creek flow through the City's 6,000 gallon raw water impoundment, which consists of a screened intake and small dam to maintain water level. As a result, sediment accumulates in the impoundment and requires annual dredging to maintain function. Furthermore, storm events cause spikes in raw water turbidity resulting in increased treatment costs.

Additionally, the existing impoundment acts as a barrier to fish passage on Jetty Creek. This is especially significant because the area has been identified as critical habitat for Oregon Coast (OC) Coho salmon, a listed species on the Federal Endangered Species Act. Removing this barrier would open an additional 1.8 miles of critical habitat to fisheries.

The proposed *Jetty Creek Impoundment Improvements & Stream Restoration* project would re-route the main stem of Jetty Creek to a restored relict channel east of the impoundment allowing unimpeded fish passage. A new fish-friendly diversion structure would be constructed to divert water from Jetty Creek to the City's impoundment, which would be increased to nearly 300,000 gallons. Restoration of the relict channel would include placement of boulders and large woody debris to enhance aquatic habitat. The area would be revegetated to provide shelter and maintain low water temperatures in the creek. Overall, this proposed project will be beneficial to both the City's water operations and the area's aquatic resources, including OC coho.

Although Jetty Creek flows year round, stream flows are highly variable. This will require careful consideration in the design process to ensure the new diversion structure will function properly under variable flow conditions and fish passage criteria are met. All structures will need to be protected from peak flow and flooding damage. Operation of the diversion will need to be carefully managed to ensure the City conforms to terms and conditions of its water rights as well as the in-stream water right allocation for Jetty Creek.

Various alternatives for the new diversion structure have been investigated. These alternatives were evaluated on their ability to meet required design objectives, such as conformance to State and Federal fish protection criteria; flexibility in diversion operations, including the ability to stop all diversions; flow monitoring capability to ensure compliance with water right terms and conditions; and low O&M and a capital cost requirements.

The preferred alternative for the new diversion structure recommended includes a flat plate fish screen to prevent fish from entering the City's diversion. The total cost for the preferred alternative is estimated at $76,500. Key design elements of the screened diversion should include:

- Conformance to Federal and State design criteria.
- Screen material should be composed of wedge wire or profile bar material for increased strength and durability.
- Provide air burst cleaning system.
- Concrete 'wall' and abutment adjacent to the channel and paired with a riprap revetment on the opposite bank to create a natural scour pool adjacent to the structure.

- Head gate located behind fish screen. Gate should be able to be operated manually or remotely by integration into the City's existing SCADA system.
- Downstream grade control maintains to minimum pool elevation.
- Piping to deliver diverted water to the impoundment via gravity system.

In addition to developing a preferred alternative design for the City's new diversion structure, this plan also indentified other items that must be completed. This includes additional studies and task, which are required to obtain necessary information for design and/or required by permitting agencies. It is important these tasks be properly planned for so that they do not cause a delay in the project.

The total project is estimated to cost $280,500 to $295,500, depending on required permitting work. The City has currently secured funding to complete 50% of design work and to begin permit process. Additional grant money will need to be obtained to complete proposed design, permitting, and construction.

SECTION 1

INTRODUCTION

The City of Rockaway Beach has authorized this study to determine the feasibility of proposed improvements to its existing raw water impoundment. The goal of these improvements is to not only improve the quality and quantity of the City's raw water supply, but also to restore fish passage and improve the habitat value of Jetty Creek. These proposed improvements have been discussed by the City and other governmental officials for some time; however, this *Feasibility Study* represents the first tangible step forward in the planning and design process.

1.1 Study Objectives

The objective of this study is to determine the feasibility of the City's proposed *Impoundment Improvement and Stream Restoration Project*. In order to determine the project's feasibility, this study investigated and summarized various site conditions that have direct impacts on project design, cost, and implementation. These conditions include:

- General description of the project area and associated watershed.
- Geological characteristics of site.
- Hydraulic analysis Jetty Creek stream flows and proposed rehabilitated creek channel.
- Inventory of biological resources in the project area and assessment of potential impacts.

Based on the findings of the initial site condition analysis, key design components and criteria were developed. These criteria were used to develop a range of appropriate alternatives for the proposed diversion structure. For each alternative, preliminary layouts and detailed cost estimates have been developed. A final design recommendation has been made based on the alternative that is most cost effective and best able to meet project goals

1.2 Study Authorization

This *Feasibility Study* has been funded by a combination of local and State money. In the spring of 2009, the City of Rockaway was awarded a grant from the Water Conservation, Reuse, & Storage Grant Program, administered by the Oregon Department of Water Resources (OWRD). This program requires the City to provide a of dollar-to-dollar match.

The City of Rockaway Beach has authorized HBH Consulting Engineers, Inc. to investigate and prepare this report to determine the design and financial feasibility of the proposed *Impoundment Improvement and Stream Restoration Project*.

1.3 Project Background & Need

The City of Rockaway Beach utilizes surface water from Jetty Creek as its main municipal water supply source. The intake for the system consists of a small impoundment with a screened intake. Currently, the entire steam flow of Jetty Creek is routed through the impoundment. Water that is not utilized by the municipal system discharges over a small spillway and back into the Creek. Although this spillway does include a fish ladder, the ladder is undersized and too steep to allow for successful fish passage.

Summer stream flows are typically insufficient to meet the City's full water rights as well as maintaining the in-stream water right. This is also the period when the City experiences its highest water demands. The existing impoundment is relatively small and cannot fully supplement flows to meet peak demands. Therefore, these flows are supplemented with water from the City's wells. This practice is more costly due to the additional pumping and treatment requirements.

Additionally, winter storms generate large quantities of runoff resulting in increased turbidity in Jetty Creek. The increased turbidity negatively impacts the quality of the City's water source and consequently increases treatment costs. High turbidity also results in sedimentation within the impoundment reducing its holding capacity. As a result of sedimentation, the City must dredge and remove excess sediment from the impoundment on an annual basis. Since all the flow from Jetty Creek is routed through the impoundment, the City is not able to protect its raw water impoundment from upstream contamination.

The following provides a summary of the problems associated with the City's existing Jetty Creek impoundment:

- Limited holding capacity.
- Difficult balance water demands and in-stream water rights due to low summer stream flows.
- High runoff during storm events increases raw water turbidity and the cost of water treatment.
- Sedimentation in impoundment reduces volume and requires frequent dredging.
- Unable to manage and monitor flow diversion.
- Diversion dam creates a barrier to fish passage.
- Disconnects the upstream and downstream reaches of Jetty Creek which affects sediment transport and habitat value.

The City has begun investigating a range of alternatives to improve its source water reliability, quality, and management by making improvements to its raw water impoundment on Jetty Creek.

1.4 Project Description

Currently, the City's raw water impoundment is situated within the main reach of Jetty Creek. The proposed improvement project would re-route the creek around the impoundment by restoring a relict stream channel thereby creating an off-channel impoundment for the City without having to relocate its water intake facilities. This would provide the City with greater operation and management flexibility of its raw water source. The City is also proposing to enlarge the impoundment to increase its holding capacity.

Re-routing Jetty Creek around the existing impoundment would require constructing a new diversion structure. Flows through the structure will need to be monitored to ensure compliance with water right permits for both the City and the in-stream requirements. Furthermore, flows through the structure will be regulated so that the City has the option to stop all water diversions from Jetty Creek. This would allow the City to cease diversions during and after large storm events when turbidly levels rise as well as protect the City's raw water supply if upstream contamination were to occur. This diversion structure would be constructed to meet all State and Federal fish protection requirements.

Key elements of this project include:

- New fish-friendly diversion structure upstream of the existing impoundment.
- Excavation of existing impoundment to increase holding capacity.
- Restoration of relict creek channel.

1.5 Project Goals & Criteria

In order to properly develop and evaluate design alternatives, goals for the City's *Impoundment Improvement and Stream Restoration Project* must be identified. For this project, both primary and secondary goals have been developed. Primary goals focus on improvements to the City's water system while secondary goals are aimed at improving the biological value of Jetty Creek.

Primary Goals

- Increase available volume of impoundment.
- Decrease maintenance requirements.
- Eliminate (or drastically reduce) dredging requirements.
- Improve operation controls.
- Reduce turbidity during storm events.
- Decrease potential risk of upstream contaminant sources.

Secondary Goals

- Eliminate existing fish passage barrier.
- Enhance aquatic habitat by improving structural complexity and re-establishing transport capability.
- Improve in-stream flow conditions.
- Reconnect the upstream and downstream reaches of Jetty Creek.

Initial criteria for design elements were developed to provide a "starting point" for feasibility assessment. The criteria are provided below:

Diversion Structure. A new diversion structure will allow water from Jetty Creek to enter into the City's existing impoundment. The diversion of water through the structure will be monitored and regulated to ensure that flows do not exceed City's permitted water rights. The new structure will also allow the City to completely close off the diversion, preventing any stream flow from entering the impoundment. This will reduce the amount of sediment entering the impoundment during large storm events as well as protect the City's raw water supply in the case of upstream contamination. A fish screen will be integrated into the design to prevent fish from entering the impoundment and potentially being harmed. The fish screen will meet all relevant Federal, State, and local regulations and requirements.

Impoundment Excavation. The existing impoundment will be enlarged to increase its holding capacity. This may be accomplished by additional excavation of the impoundment westward. Retaining walls along the perimeter of the impoundment may also be necessary.

Creek Restoration. Flows in Jetty Creek will be redirected to a relict channel that lies east of the City's impoundment. Restoration will include excavation to re-establish channel bed as well as placement of large wood and rock structures to enhance stream complexity and improve aquatic habitat. Stream restoration will also focus on creating unimpeded fish passage upstream of the City's impoundment and meet State and Federal requirements.

SECTION 2

STUDY AREA

The study area for this *Feasibility Study* consists of the general vicinity of the City's existing raw water impoundment, including the area of the relict Jetty Creek channel. Additional consideration was given to the overall Jetty Creek watershed area to identify potential hydraulic and ecological impacts of the final project.

The City of Rockaway Beach is located on the Oregon coast approximately 75 miles west of Portland. As shown in Figure 2-4, the City is situated between Tillamook Bay to the south and Nehalem Bay to the north; Jetty Creek discharges into the southern portion of Nehalem Bay. The City's point of diversion on Jetty Creek is approximately 700 feet east (upstream) of Highway 101 in Township 2N, Range 10W, Section 17 NE-SE. The general vicinity of the City's intake is shown in Figure 2-5.

2.1 General Watershed Description

Jetty Creek is part of the Cook Creek/Lower Nehalem River Watershed in the Nehalem Sub-Basin of the Northern Oregon Coastal Basin. The approximate limit of the Jetty Creek watershed is depicted in Figure 2-6. The creek carries year-round stream flow from the western flank of the Oregon Coast Range into Nehalem Bay through a steep sided valley. Jetty Creek flows in a generally west to southwest direction. The total watershed area is approximately 2.3 square miles. Watershed elevations range from sea level at the mouth of the Jetty Creek to approximately 650 feet inland with a mean basin slope (computed from 30m DEM) of 17.1 degrees.

Climate

Climate information was obtained from the Western Regional Climate Center collected at the nearby weather station in Tillamook from 1948 to 2007. As shown in Figure 2-1, the area generally has mild summers and winters. Typical summer temperatures range from 49-67°F and winter temperatures range from 37-51°F. The average annual temperature is 50.6°F.

Figure 2-1- Monthly Temperature Summary

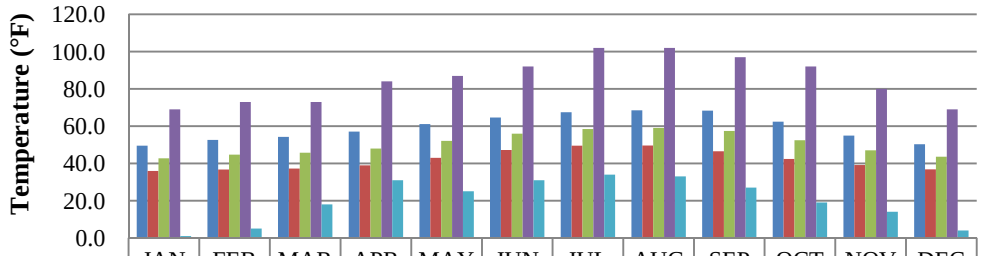

	JAN	FEB	MAR	APR	MAY	JUN	JUL	AUG	SEP	OCT	NOV	DEC
Avg. Max.	49.5	52.6	54.3	57.1	61.1	64.6	67.4	68.5	68.3	62.4	54.9	50.3
Avg. Min.	35.9	36.7	37.2	38.9	43.0	47.2	49.5	49.6	46.5	42.4	39.1	36.8
Avg. Mean	42.7	44.7	45.8	48.0	52.1	55.9	58.5	59.1	57.4	52.4	47.0	43.6
Extreme Day High	69.0	73.0	73.0	84.0	87.0	92.0	102.0	102.0	97.0	92.0	80.0	69.0
Extreme Day Low	1.0	5.0	18.0	31.0	25.0	31.0	34.0	33.0	27.0	19.0	14.0	4.0

The study area receives approximately 89 inches of precipitation annually (Figure 2-2). The majority of this precipitation is in the form of rainfall. Snowfall does occur some winters but accumulations are usually short-lived. The average annual snowfall is 2.3 inches. Nearly half (43%) of yearly precipitation occurs during the winter months of December through February (Figure 2-3).

Figure 2-2 - Annual Precipitation (1949 – 2007)

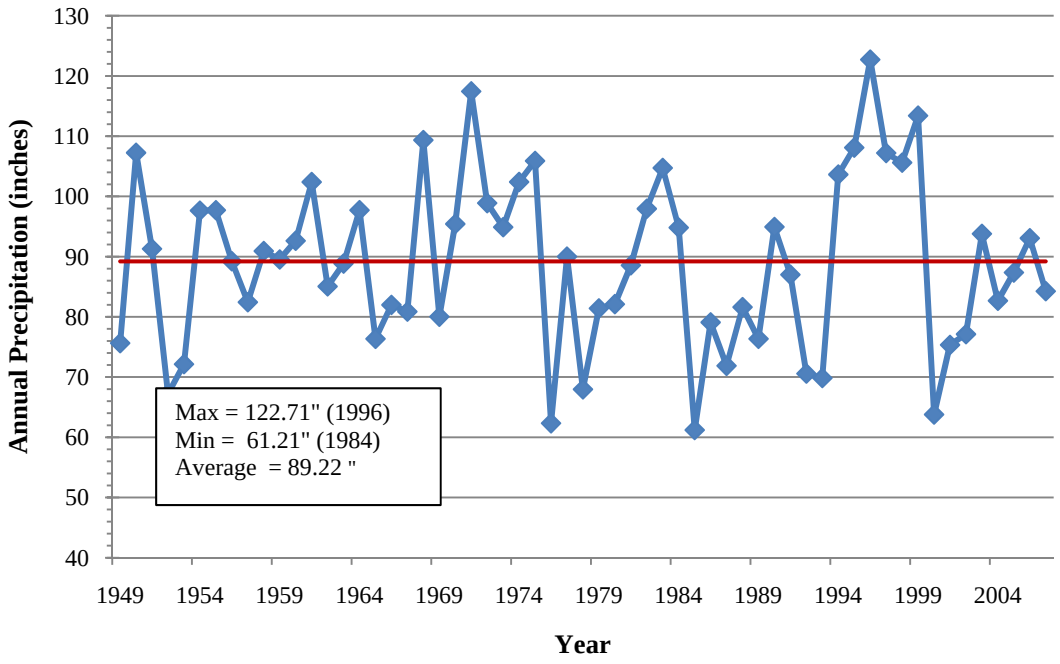

Figure 2-3 – Monthly Precipitation Summary (1949-2007)

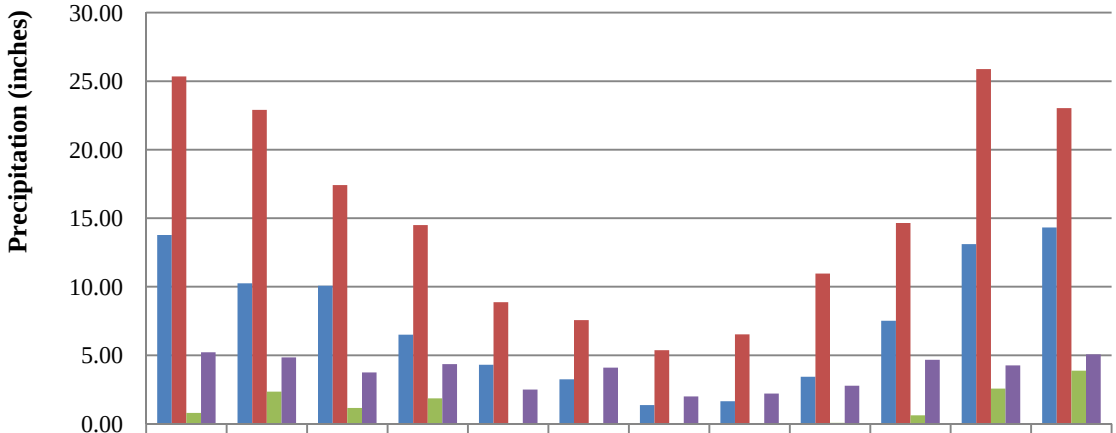

	JAN	FEB	MAR	APR	MAY	JUN	JUL	AUG	SEP	OCT	NOV	DEC
Mean	13.77	10.25	10.07	6.50	4.31	3.24	1.36	1.64	3.43	7.52	13.11	14.32
High	25.34	22.90	17.42	14.50	8.87	7.56	5.37	6.53	10.96	14.65	25.88	23.03
Low	0.79	2.34	1.16	1.86	0.00	0.00	0.00	0.01	0.07	0.62	2.57	3.88
1-Day Max	5.22	4.84	3.75	4.35	2.50	4.10	2.00	2.20	2.78	4.67	4.26	5.06

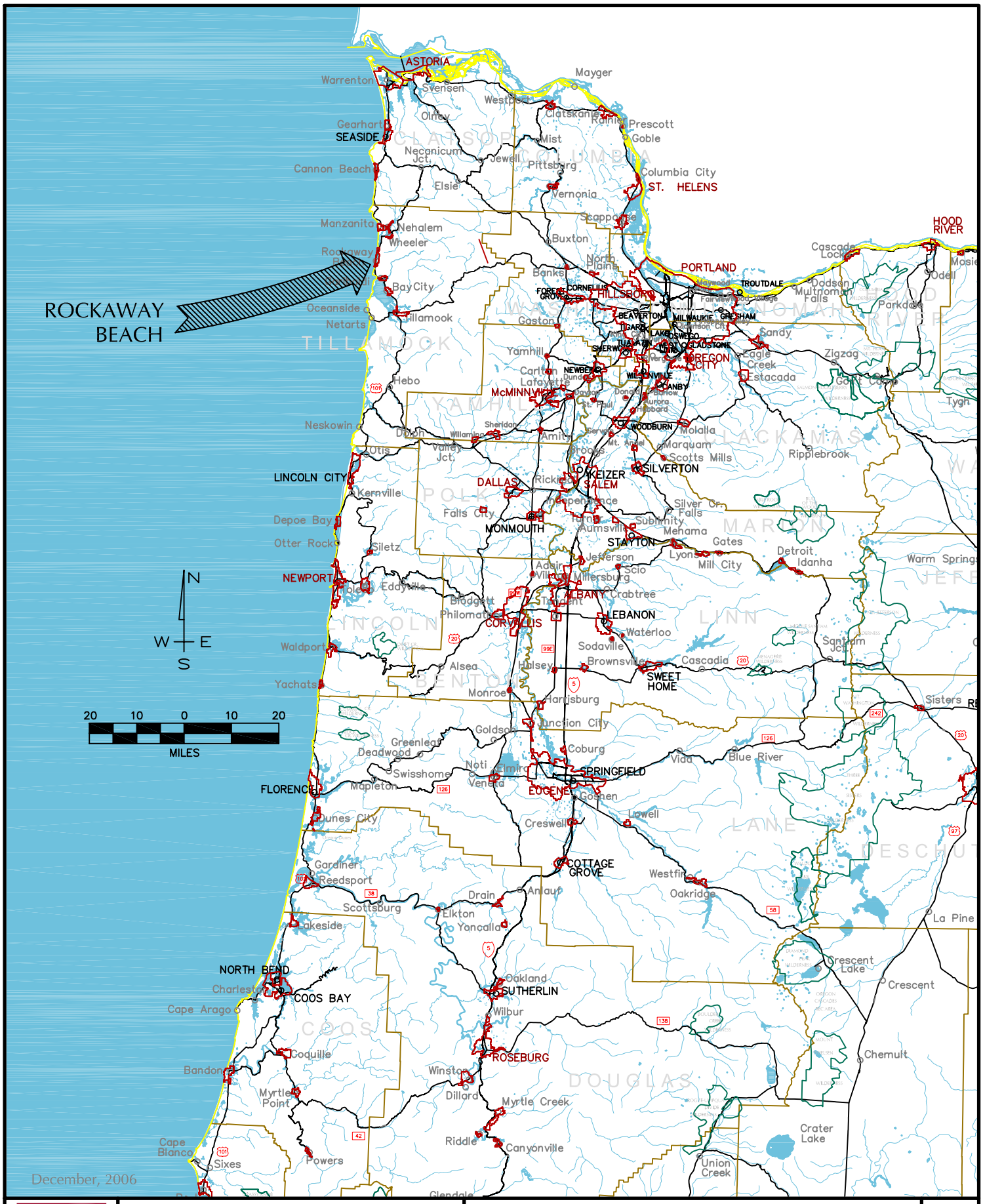

H B H Consulting Engineers	City of Rockaway Beach *JETTY CREEK IMPOUNDMENT &* *STREAM RESTORATION FEASIBILITY STUDY*	LOCATION MAP City of Rockaway Beach Tillamook County, Oregon	FIG. 2-4

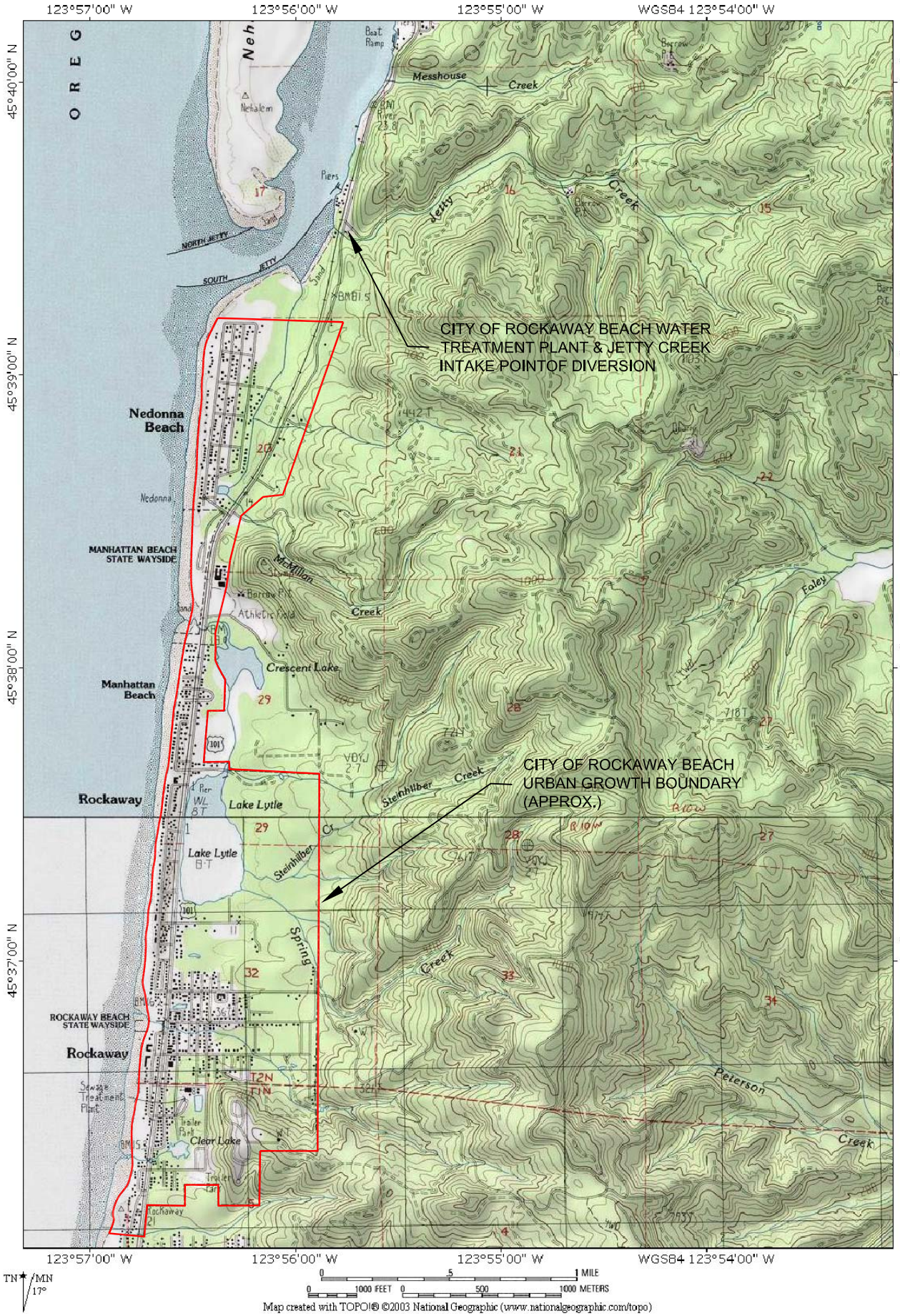

H B H Consulting Engineers	City of Rockaway Beach *JETTY CREEK IMPOUNDMENT IMPROVEMENTS & STREAM REHABILITATION FEASIBILITY STUDY*	VICINITY MAP	FIG. 2-5

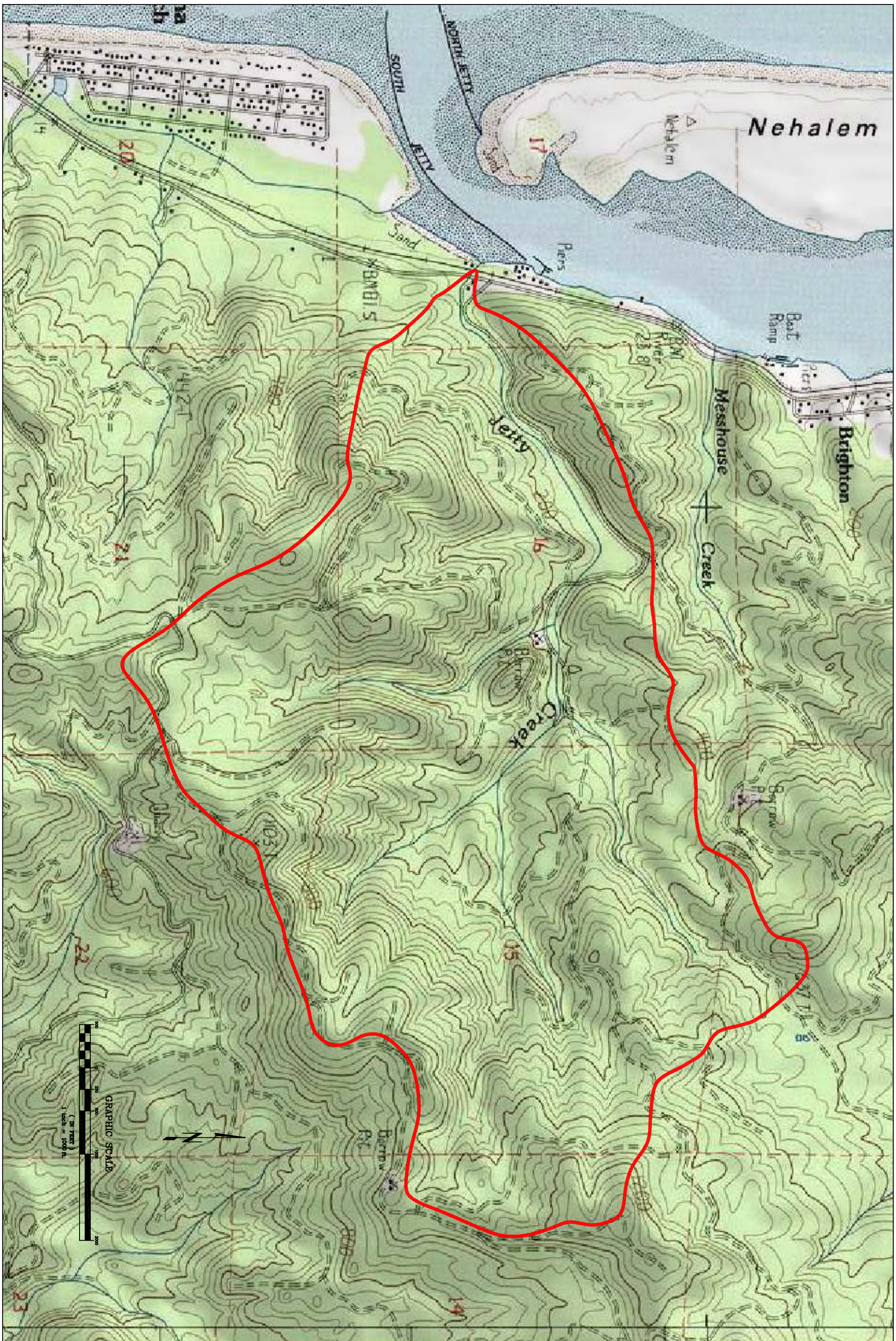

FIG. 2-6	DRAWN BY: CLL DATE: March 2009	JETTY CREEK WATERSHED	City of Rockaway Beach *JETTY CREEK IMPOUNDMENT IMPROVEMENTS & STREAM REHABILITATION FEASIBILITY STUDY* H B H Consulting Engineers

Soils

Information on soils was obtained from the National Resource Conservation Service (NRCS) Soil Survey of Tillamook County, Oregon (2009). As shown in Figure 2-7, a variety of different soil types are found within the Jetty Creek watershed. The soil types within the study area are listed in Table 2-1.

The average water capacity of the top 60 inches of soil, as determined from the State Soil Geographic (STATSGO) database, is 0.18 inches. The average soil permeability is 1.54 inches per hour. Appendix A provides additional information on these soil properties.

Table 2-1 – Summary of Soil Properties

Unit	Unit Name	Percent of Watershed	Depth to Restrictive Layer	AASHTO Rating	Drainage Class	Hydrologic Soil Group	Average Slope
2A	Fluvaquents-Histosols complex, 0 to 1 percent slopes	0.80%	114	A-7	Very Poorly Drained	D	0.5
13B	Waldport, thin surface-Heceta fine sands, 0 to 5 percent slopes	0.40%	>200	A-8	Excessively Drained	A	3
20D	Klootchie-Necanicum complex, 5 to 30 percent slopes	0.20%	>200	A-8	Well Drained	B	18
20E	Klootchie-Necanicum complex, 30 to 60 percent slopes	9.00%	>200	A-8	Well Drained	B	45
21F	Necanicum-Ascar-Klootchie complex, 60 to 90 percent slopes	0.50%	>200	A-8	Well Drained	B	75
29D	Templeton-Klootchie complex, 5 to 30 percent slopes	18.90%	150	A-8	Well Drained	B	18
29E	Templeton-Klootchie complex, 30 to 60 percent slopes	70.2%	150	A-8	Well Drained	B	45

Source: Natural Resource Conservation Service, Tillamook County Soil Survey, Version 2 (August 12, 2009)

Geology

Jetty Creek is located in the Coast Ranges geologic province of Oregon. Area geology in this discussion was derived using the *1994 Geologic Map of the Tillamook Highlands, Northwest Oregon Coast Range* by Ray E. Wells, Parke D. Snavely, Jr., Norman S. MacLeod, Michael M. Kelly, and Michael J. Parker. A map of the area geology is shown in Figure 2-8.

Geological materials found in the watershed include volcanic and sedimentary rocks and are listed in Table 2-2. These rocks were formed during the Eocene and Oligocene ages of the Tertiary period. The volcanic rocks are mainly basaltic lavas and tufts with sedimentary rocks consisting of shale, claystone, sandstone, and siltstone at shallower depths.

Table 2-2 – Rock Type Descriptions

Rock Unit	Rock Name	Age	Description
TN	Nestucca Formation	Upper Eocene	Thin bedded, laminated dark gray tuffaceous mudstone with fine- to coarse-grained, graded arkosic and basaltic sandstone interbeds, locally glauconitic and fossiliferous, thin tuff beds and calcareous concretions are common. Locally contains arkosic sandstone dikes and exhibits soft sediment deformation. Unit is bleached and hydrothermally altered over large areas adjacent to Miocene and Eocene basalt intrusions.
Tigr	Grande Ronde Basalt	Middle Miocene	Dark gray to light gray, aphyric, tholeiitic basalt, as columnar jointed subaerial flows, submarine pillow basalt, and isolated pillow breccia; includes interbedded palagonitic hyaloclastite breccias, commonly cemented by clays, zeolite, or calcite; locally includes interbeds of basalt conglomerate and micaceous, carbonaceous mudstone and sandstone. Flows include low MgO and high MgO chemical types and belong to the N2 and upper R2 magnetozones of the Grande Ronde Basalt of the Columbia Plateau and lower Columbia River (Swanson and others, 1979; Niem and Niem, 1985; Wells and others, 1989; Tolan and others, 1989).

Source: Geologic Map of the Tillamook Highlands, Northwest Oregon Coast Range by Ray E. Wells, Parke D. Snavely, Jr., Norman S. MacLeod, Michael M. Kelly, and Michael J. Parker (1994)

More detailed information on the specific geology of the project area is presented in Section 3, "*GEOLOGICAL INVESTIGATION*".

Vegetation

The study area and associated watershed lies completely within the temperate coniferous rain forest belt. Jetty Creek sustains a healthy riparian area dominated by red alder with smaller amounts of western red cedar, Sitka spruce, and western hemlock. Understory species are predominantly salmonberry, elderberry, sword fern, and miscellaneous herbs.

Historically, the basin was dominated by old growth coniferous ecosystems with marshlands in the lower gradient areas and estuaries. Now the majority of the area's vegetation consists of broadleaf species or are mixed broadleaf and medium sized (25-50 cm diameter) conifers. Clearcuts are observed throughout the area.

Land Use

The land in the Jetty Creek watershed is privately owned and closed to public access. Forestry is the major land use activity in the watershed. No change in current land use is anticipated in the foreseeable future; however, based on conservation with City staff, no logging within the boundary of the watershed is expected within the next two years.

INFORMATION ON THIS MAP WAS OBTAINED FROM THE NATURAL RESOURCE CONSERVATION SERVICE (NRCS) TILLAMOOK COUNTY SOIL SURVEY (AUGUST 2009).

H B H Consulting Engineers	City of Rockaway Beach *JETTY CREEK IMPOUNDMENT IMPROVEMENTS & STREAM REHABILITATION FEASIBILITY STUDY*	SOILS MAP	FIG. 2-7

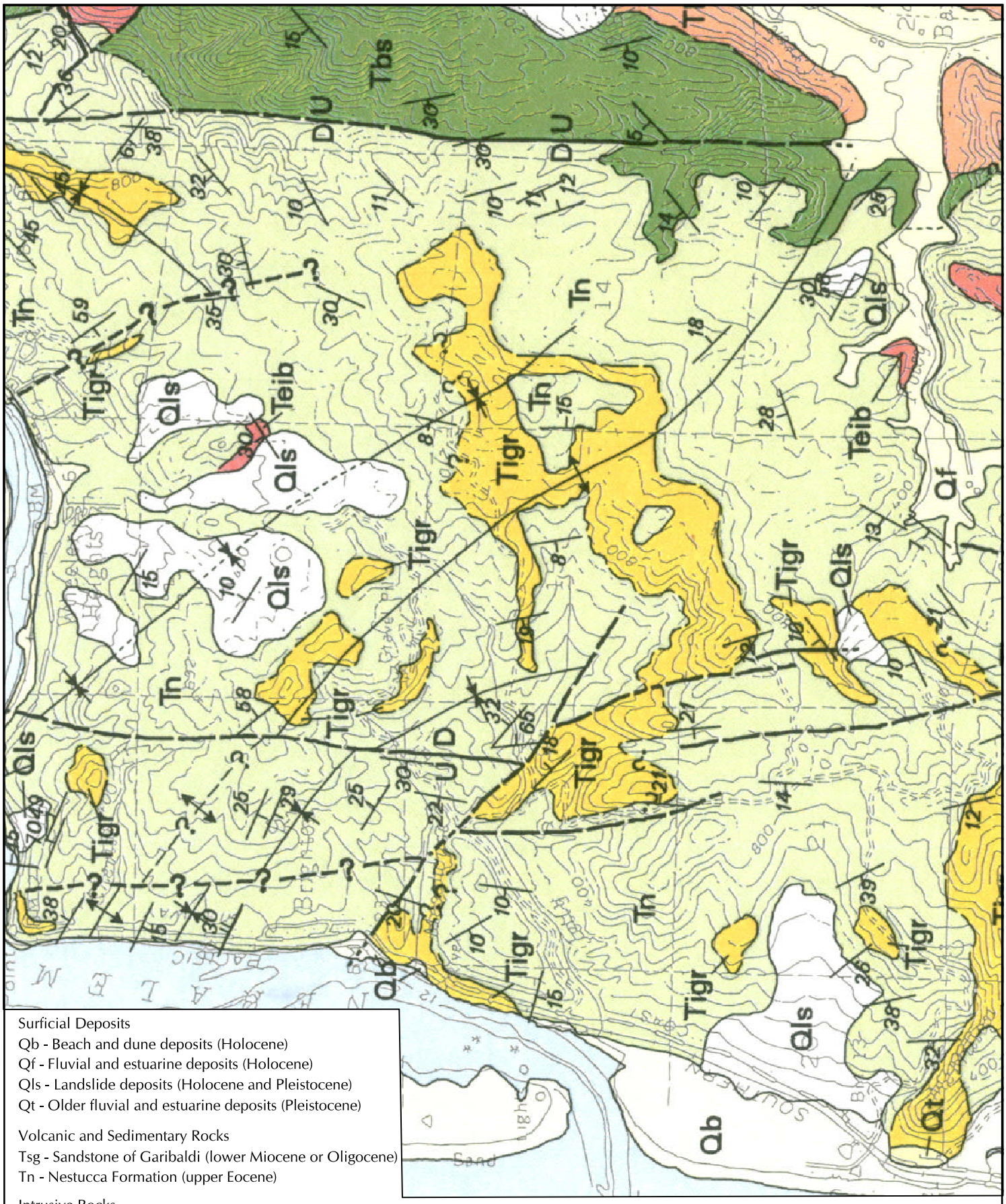

Surficial Deposits
Qb - Beach and dune deposits (Holocene)
Qf - Fluvial and estuarine deposits (Holocene)
Qls - Landslide deposits (Holocene and Pleistocene)
Qt - Older fluvial and estuarine deposits (Pleistocene)

Volcanic and Sedimentary Rocks
Tsg - Sandstone of Garibaldi (lower Miocene or Oligocene)
Tn - Nestucca Formation (upper Eocene)

Intrusive Rocks
Tigr - Grande Ronde Basalt (middle Miocene)
Teib - Basalt sills (late Eocene)

Geologic Map of the Tillamook Highlands, Northwest Oregon Coast Range by Ray E. Wells, Parke D. Snavely, Jr., Norman S. MacLeod, Michael M. Kelly, and Michael J. Parker (1994)

H B H Consulting Engineers	City of Rockaway Beach *JETTY CREEK IMPOUNDMENT IMPROVEMENTS & STREAM REHABILITATION FEASIBILITY STUDY*	GEOLOGY MAP	FIG. 2-8

2.2 Project Site Description

The project site includes the City's existing impoundment, Jetty Creek, and the relict creek channel. The entire project is located on land recently purchased by Olympic Resource Management. The City maintains an easement to the area for the impoundment and water treatment plant.

Figure 2-10 shows the existing conditions within the project site. A preliminary layout for the proposed project is provided in Figure 1-1[1].

Existing Impoundment

The Jetty Creek raw water impoundment is located north of the City of Rockaway Beach, adjacent to the City's water treatment plant (see picture below) and approximately 700 feet east of Highway 101. The impoundment consists of an excavated earthen basin. Water level within the impoundment is maintained using a low concrete dam. Raw water is pumped from a screened raw water intake in the impoundment and delivered to the City's water treatment facility.

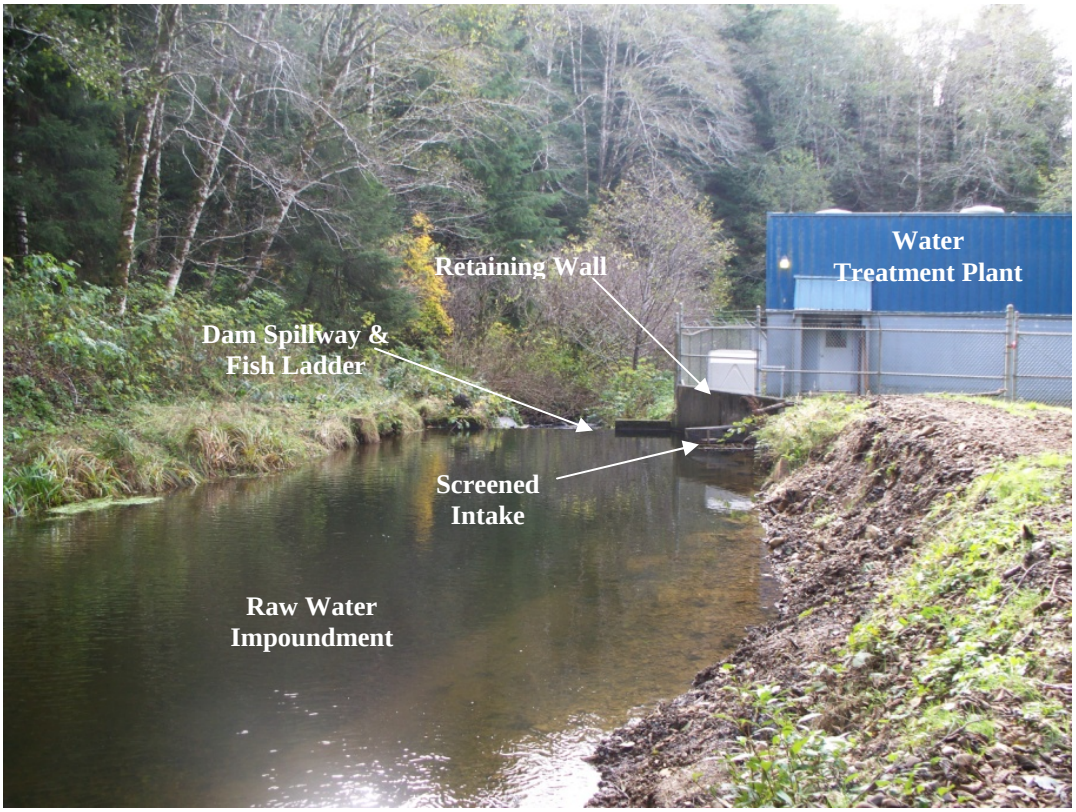

PHOTO: Existing impoundment site

[1] The preliminary layout provided in this Feasibility Study is only intended to provide a general concept for future design elements and is subject to change.

The impoundment was created by excavating into a relatively wide and flat area. The eastern border is delineated by a steep embankment, which is composed, in part, by fill. The impoundment's western side is border by a relatively level, un-vegetated terrace. The maximum width of the valley bottom in the impoundment area is approximately 180 feet.

Based on site survey information, the City's impoundment has a maximum surface area of roughly 3,000 square feet or 0.07acres. The bottom of the impoundment is at an approximate elevation of 38 feet. The water level in the impoundment is maintained by a concrete dam. The top of the impoundment dam spillway is at an approximate elevation of 42 feet giving the impoundment a maximum depth of approximately 4 feet. The existing impound has a maximum volume of approximately 50,000 gallons.

An attempt was made to provide for fish passage through the City's diversion by constructing a fish ladder within the foot print of the diversion dam (see photo below). However, in actuality the fish ladder is undersized and too steep to allow for successful passage through the impoundment structure.

The proposed project would increase the volume of the impoundment. This would be achieved by increasing the surface area. The impoundment would be expanded westerly by excavating into the unvegetated bench located adjacent to the impoundment (see following photo).

The new impoundment surface area would increase to approximately 10,300 square feet or 0.24 acres. Initial plans also investigated increasing the volume by raising the top of the existing dam structure. However, this proved to be infeasible due to the elevation of the WTP pump station. Therefore, no changes to the existing dam structure are expected as part of this project. The approximate volume of the new impoundment would be nearly 300,000 gallons, or 6 times the existing holding capacity.

PHOTO ABOVE: Existing dam structure spillway and fish ladder

PHOTO RIGHT: Unvegetated bench adjacent to existing impoundment

Relict Creek Channel

Due to the area's alluvial material and topography, it is believed that prior to the construction of the existing impoundment Jetty Creek likely migrated back and forth across the valley floor. As a result, there is evidence of relict channel beds situated east of the City's impoundment. However, with the construction of the City's impoundment, Jetty Creek was altered and permanently re-routed to flow through the City's diversion. The relict channel was subsequently plugged and abandoned.

A relict channel is now observed as a linear but discontinuous topographic swale east of the City's impoundment. The variable and irregular surface topography of the relict channel is primarily due to the fact that the City has used the area to place and dewater sediment removed during the annual dredging of the impoundment.

PHOTO: View across impoundment of relict channel (Courtesy PBS Engineering & Environmental)

The proposed project would rehabilitate approximately 300 feet of the relict creek channel. As a result of the City's practice of disposing fill materials in the area, portions of the new alignment would require extensive excavation. The existing topography of the area of the relict channel is shown in Figure 2-9. Based on this data the maximum depth of required excavation required to establish the restored creek bed is approximately 11 feet.

Figure 2-9 – Existing and Proposed Surface of Relict Creek

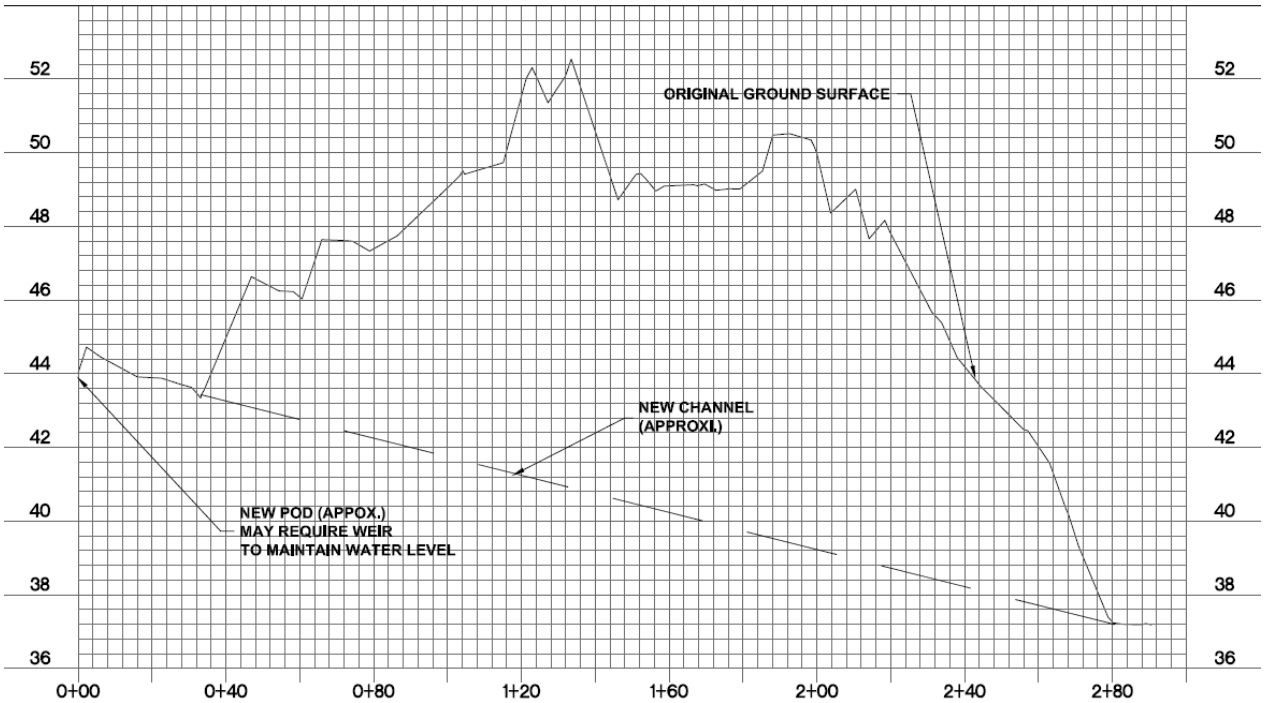

Providing essential aquatic habitat is crucial to the stream restoration element of the project. The restoration design will likely include a combination pool and riffles as well as the placement of large wood debris and boulders. The goal of the restoration effort is to restore this section of Jetty Creek to matches both the hydraulic function and habitat value of the upstream channel.

PHOTO: Jetty Creek upstream City's impoundment

Attachment F: Jetty Creek Impoundment Improvements and Stream Restoration Feasibility Study

HBH Consulting Engineers

PART 2

Jetty Creek Fish Passage Restoration
Lower Nehalem Watershed Council

OWRD Water Supply Development Account
Loan and Grant Application

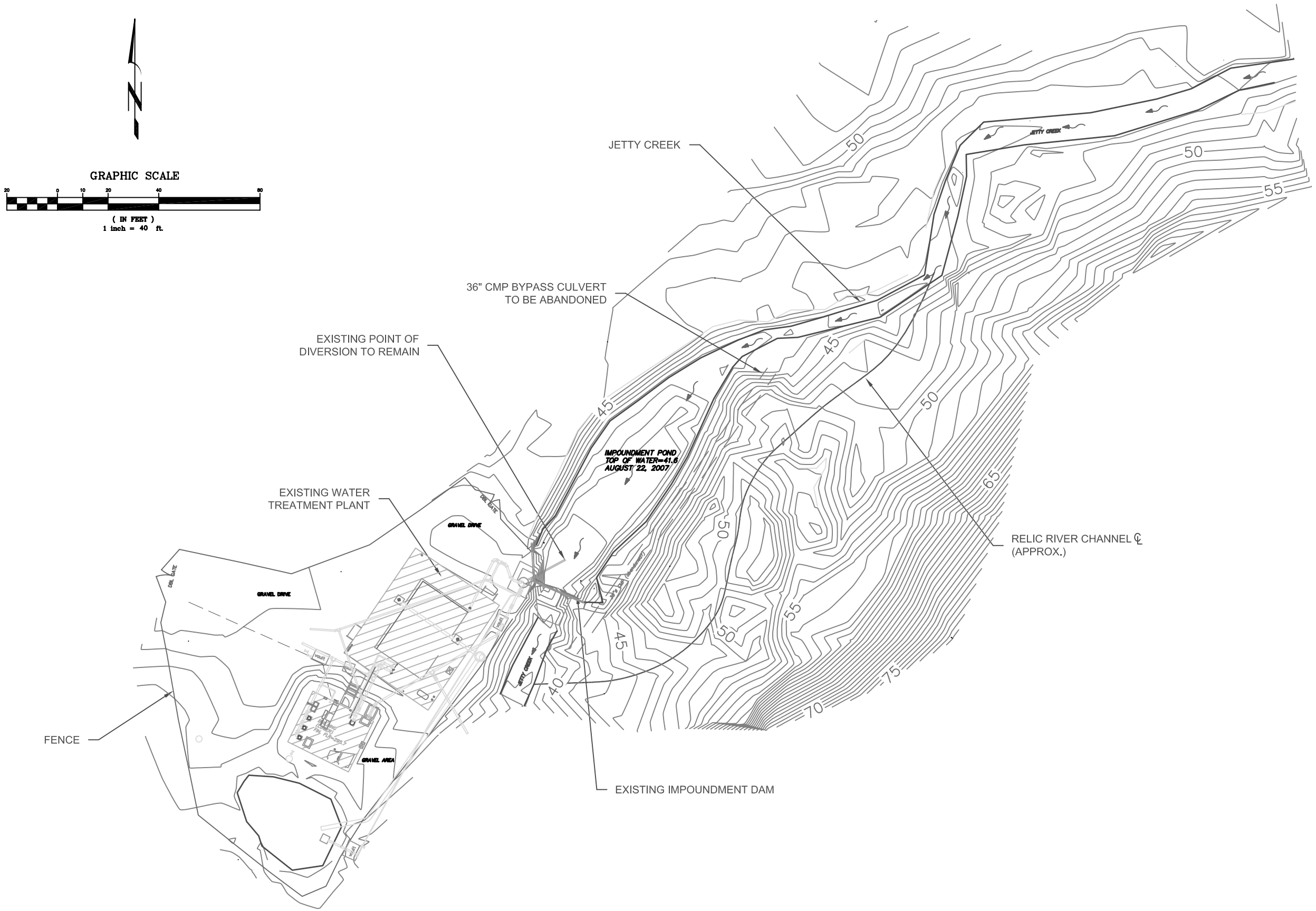

H B H Consulting Engineers

City of Rockaway Beach

JETTY CREEK IMPOUNDMENT IMPROVEMENTS & STREAM REHABILITATION FEASIBILITY STUDY

EXISTING CONDITIONS

DRAWN BY: CLL

DATE: November 2009

FIG. 2-10

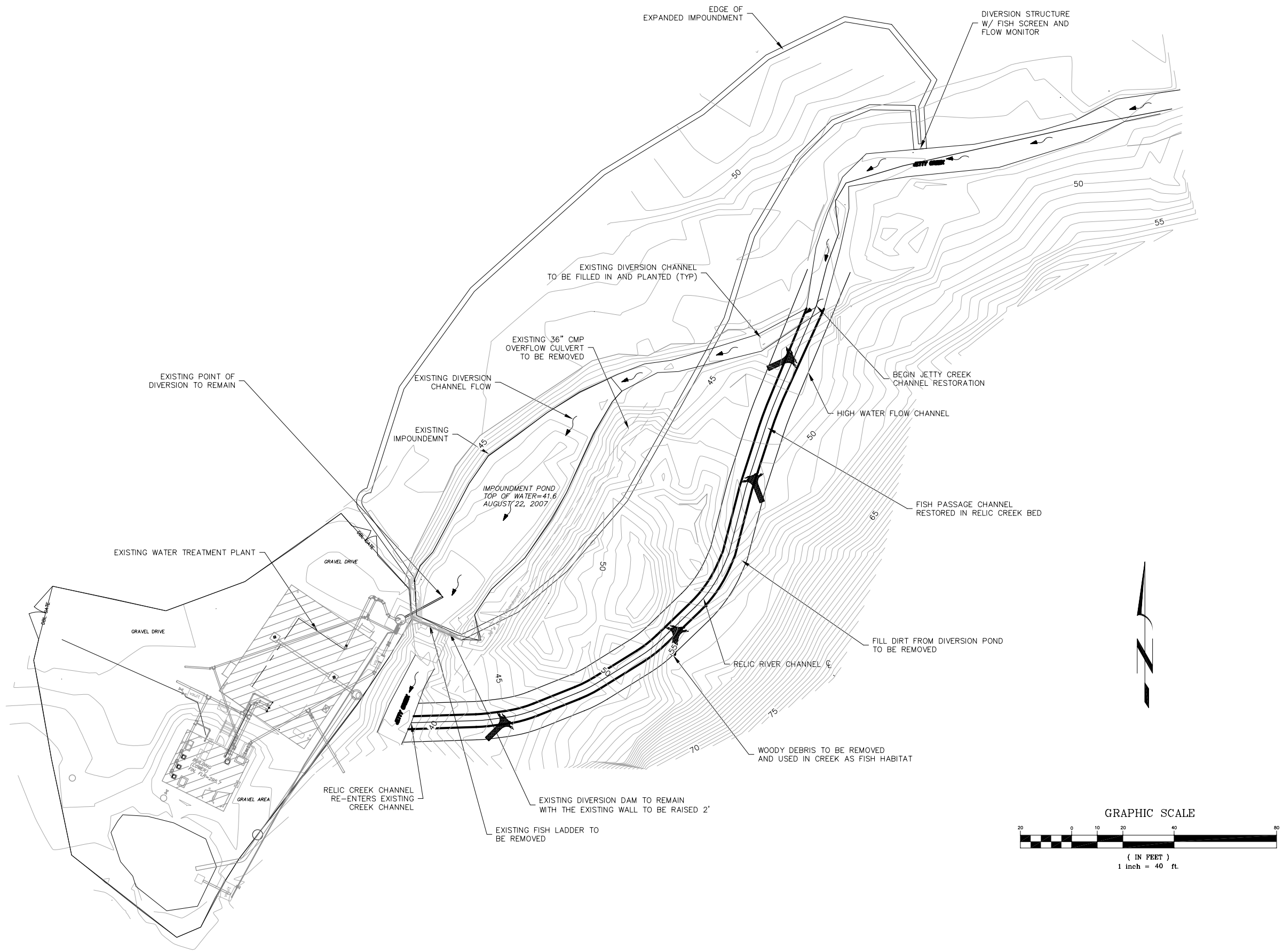

H B H Consulting Engineers

City of Rockaway Beach

JETTY CREEK IMPOUNDMENT iMPROVEMENTS & STREAM RESTORATION FEASIBILITY STUDY

PRELIMINARY LAYOUT

DRAWN BY: CLL

DATE: DEC 2009

FIG. 2-11

SECTION 3

GEOLOGICAL INVESTIGATION

A preliminary geological investigation of the site geology was conducted by PBS Engineering & Environmental. The purpose of this investigation was to determine the general feasibility of the proposed project in terms of the site's geologic conditions. A summary of their observations and recommendations is presented below. More details on site geology can be found in the Technical Memorandum authored by PBS, which is provided in Appendix B.

3.1 Geologic Setting

Material

The existing impoundment was constructed by excavating the alluvial sediments that are present in the valley bottom. The gently-sloping valley bottom and terrace surfaces are underlain by alluvium of undetermined thickness that overlies bedrock. Exposures in the cut bank along the terrace surface on the eastern side show coarse-grained channel sediments that are overlain by several feet of fine-grained overbank sediment. Colluvium derived from erosion of the side slope may be present.

The Jetty Creek channel is comprised of gravels with variable percentages of silt and sand and trace to some cobble sized clasts to 6 inches.

Bedrock

As previously noted, Jetty Creek is located in the Coast Ranges geologic province of Oregon. According to published geologic mapping by Wells and others (1994), bedrock at the site consists of the Nestucca Formation of upper Eocene age (map unit Tn). This marine sedimentary rock unit is generally described as tuffaceous mudstone that is thin-bedded, laminated, and dark gray. This formation includes interbeds of graded arkosic and basaltic sandstone. The other local bedrock unit is the more recent intrusive basalt of the Grand Ronde Basalt of middle Miocene age (map unit Tigr). This basalt is not mapped along Jetty Creek; however a large outcrop of basalt is present along the northern side of the treatment plant.

Except for the abovementioned outcrop of hard, widely-jointed basalt bedrock on the slope immediately west of the treatment plant, bedrock is not observed in the site vicinity. The depth to bedrock is unknown. According to Shawn Vincent, Public Works Director for Rockaway Beach, bedrock was not encountered during the construction of the original water intake facility at Jetty Creek, which excavated to a depth of approximately 8 feet beneath the creek channel. Drills logs for the ODOT's Jetty Creek Culvert Replacement project (located approximately 1,000 feet downstream from impoundment) reported bedrock depth greater than 40 feet. Copies of these logs are provided in Appendix B.

Slope Stability

Landslides are common in the Coast Range due to the weak and deeply-weathered sedimentary bedrock or colluviums found in the region. Regional scale geologic hazard mapping by Schlicker and Deacon

(1972) identified "landslide topography" along the southeastern slope in the Jetty Creek valley from the mouth up past the treatment plant area.

The location of the centerline of the relict channel at the closest point is approximately 20 feet from the toe of the valley side slope. The valley side slope above the terrace ranges approximately between 20 and 30 degrees. The slope is hummocky, in part, and localized small scarps are present indicating marginal slope stability. For the most part, conifer trees are straight; although some trees are bowed or pistol butted, indicating local movement or soil creep is present. There is also evidence of localized, relatively shallow slumping and soil creep on the side slope above the terrace.

3.2 Geotechnical Recommendations

A summary of the observations from this site visit as well as general geologic information were used to determine whether or not the proposed project would be geologically feasible. Based on its study, PBS concluded that the proposed plans for the impoundment appear feasible. Additional subsurface explorations and geotechnical engineering studies are recommended to provide detailed information on soil and groundwater conditions, evaluate slope stability, complete engineering analysis, and provide recommendations required for design and construction. These tests should include the following:

- Test Pits - Subsurface exploration by test pits and possibly drilling will be needed to obtain data including depth to bedrock and rock quality characteristics, which will be important to foundation design for the diversion structure or possible retaining walls. A series of test pits should also be excavated along the proposed alignment and in the adjacent valley side slope to evaluation conditions. Test pits in the channel should be excavated to a minimum depth of about 5 feet below the channel grade.

- Slope Stability - Analysis is necessary to evaluate whether construction of the creek channel in the terrace or enlargement of the channel as a result of erosion over time significantly reduces the factor of safety on the valley slope. Failure of the slope could block the channel resulting in a damaging debris flow to the City's facilities.

SECTION 4

HYDRAULIC ANALYSIS

Hydrologic characterization and hydraulic assessment of Jetty Creek are essential to developing project feasibility and design. Watershed and site hydrology provide important information for establishing key design criteria and develop a hydraulic model of the proposed project. Hydraulic analysis provides the foundation for river restoration and fish passage design and is the basis for further analyses such as sediment transport and conveyance.

4.1 Site Hydrologic Characteristics

Information on site hydrology was obtained from a number of sources. These sources include site visits, topographical surveys, US Geological Services (USGS), and hydraulics report for the ODOT Jetty Creek Culvert Replacement project.

Jetty Creek Watershed

Basic basin characteristics for Jetty Creek are summarized in the following table. This information was obtained from the USGS StreamStats website (http://streamstats.usgs.gov/orstreamstats/).

Table 4-1 –Basin Characteristics[1]

Parameter	Minimum	Mean	Maximum
24 Hr – 2 Year Precipitation (inches)	2.52	4.11	5.79
Average Soil Permeability (inches per hour)	0.72	1.53	4.76
Mean Maximum January Temperature (°F)	42.40	48.90	53.90
Available Water Capacity (inches)	0.10	0.17	0.23

[1] Generated using USGS StreamStats

Stream Flow Analysis

Stream flows have a direct impact on stream velocities, shearing force, stage, and a host of other factors that affect final design and operation. For this project it is important to characterize peak stream flows as well as determining expected low summer stream flows.

A USGS gage station (ID14301250) is located approximately 115 feet hundred feet upstream from the City's existing impoundment. Stream flow data from this station is available for nearly a 20-year period from November 1975 through September 1995. This data was used to perform stream flow analysis of Jetty Creek.

Jetty Creek provides year-round stream flow; however, there is great variation in the magnitude of flow throughout the year. Figure 4-1 shows the average daily flow for each month observed for the period of record. As this figure shows, high stream flows occur during winter months. The highest average daily stream flow of 18.9 cfs was observed in the month of December. The largest single day flow occurred on January 23, 1982 equaling 308 cfs. As rainfall in the area decreases, so too do the flows in Jetty Creek. Typically, the lowest stream flow occurs in August when the daily stream flow averages just 2.0 cfs. The minimum flow of 0.57 cfs was observed on September 28, 1994.

Figure 4-1 – Monthly Average Daily Steam Flows (Nov 1975 - Sept 1995)

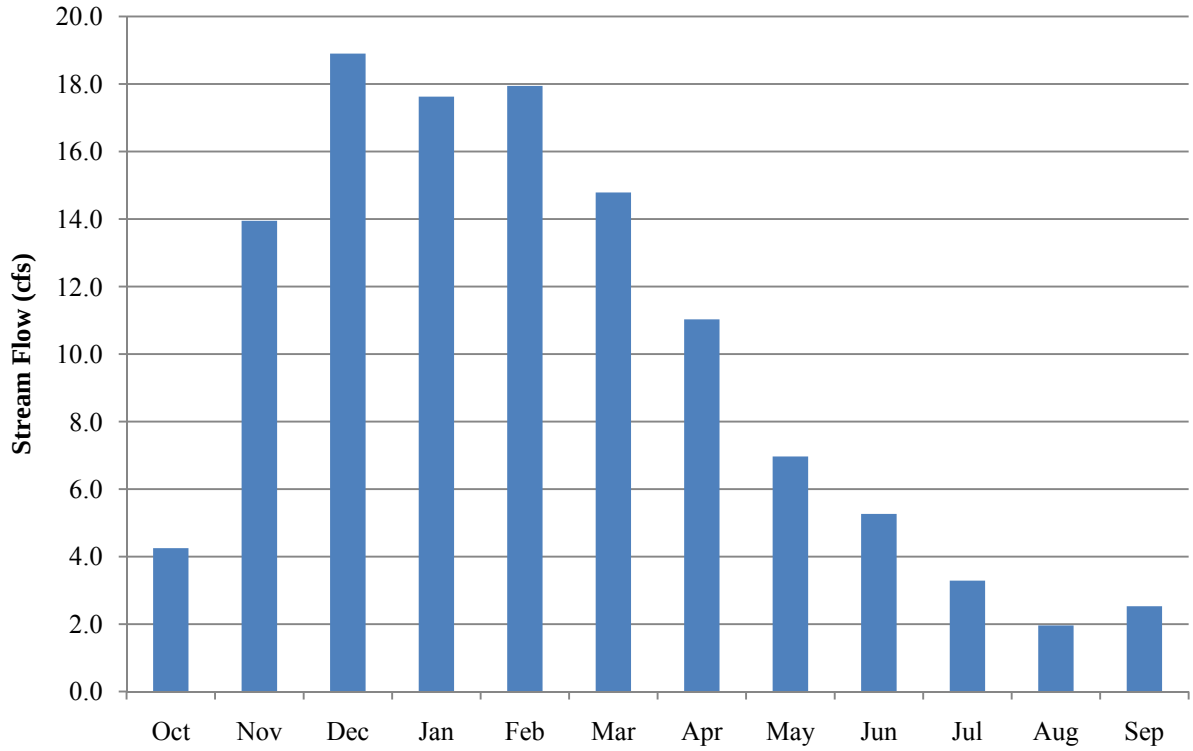

Designs for diversion structures and fish passage facilities are based on operational requirements under a large range of stream flows. A flow duration curve (FDC) shows the percentage of time that flow in a stream is likely to equal or exceed some specified value of interest and is a useful tool to establish operating design flows. The FDC for the entire data set is show in Figure 4-2. Monthly FDCs are provided in the appendix.

Figure 4-2 - Flow Duration Curve (Nov 1975 - Sept 1995)

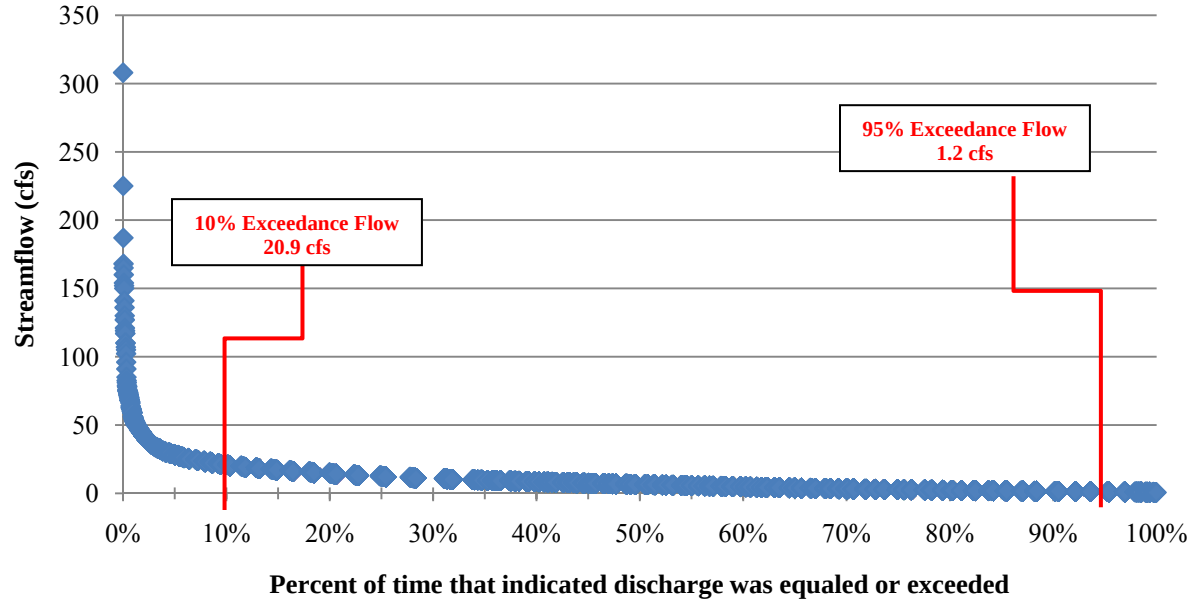

Typically the low flow design is based on the 95% exceedance flow for the migration period of the fish species of concern. Similarly, the high flow design discharge equals the flow that is not exceeded more than 10% of the time during the months of migration. Coastal coho span from November to January. Fry emerge in March or April. Hence, these are the months for which hydrologic estimates are needed.

Table 4-2 – Jetty Creek Monthly Stream Flow Statistics[1]

	Daily Stream Flows (cfs)			Flow Duration (cfs)	
	Average Flow	Minimum Flow	Maximum Flow	95% Exceedance	10% Exceedance
October	4.2	0.8	62.0	0.9	10.0
November	13.9	0.8	117.0	1.3	27.0
December	18.9	1.8	187.0	4.4	33.1
January	17.6	2.5	308.0	4.3	31.3
February	17.9	2.5	150.0	3.9	34.5
March	14.8	2.9	107.0	5.1	25.8
April	11.0	2.9	96.0	4.5	18.0
May	7.0	3.0	22.0	3.5	11.0
June	5.3	1.5	53.0	2.3	9.4
July	3.3	1.1	56.0	1.4	5.2
August	2.0	0.9	9.2	1.1	3.1
September	2.5	0.6	19.0	0.8	5.3

[1] Statistical analysis based on data obtained from USGS gage 14301250 from 1976 to 1995

The structural designs of in-stream structures (e.g. division gates, fish screen, etc.) as well as stream stability and flood control are dependent on determining peak design flows. The peak flows for the drainage area were estimated by ODOT using USGS regression equations and are shown Table 4-3.

Table 4-3 – Peak Flows for Jetty Creek[1]

Recurrence Interval	Peak Flow (cfs)
Q_2	110
Q_5	160
Q_{10}	190
Q_{25}	230
Q_{50}	260
Q_{100}	290
Q_{500}	370

[1] Source: Oregon Department of Transportation, Jetty Creek Culvert Replacement, Hydraulic Report (1/18/2007)

4.2 Hydraulic Model

A preliminary hydraulic model of the project was developed using HEC-RAS 4.0. This model was developed for ***preliminary investigation only*** in order to provide estimates of potential hydraulic characteristics at the new diversion structure and through the restored creek channel. A more detailed model will be needed as part of the final design process.

HEC-RAS

HEC-RAS was developed by the US Army Corps of Engineers' Hydraulic Engineering Center as an integrated package of hydraulic analysis programs. This software is capable of modeling a network of channels, a dendritic system, or a single river reach. The basic computational procedure of HEC-RAS for steady flow is based on the solution of the one-dimensional energy equation. Energy losses are evaluated by friction and contraction/expansion. The momentum equation may be used in situations where the water surface profile is rapidly varied. These situations include hydraulic jumps, hydraulics of bridges, and evaluating profiles at river confluences.

Model Development & Assumptions

For the purposes of this report, a one-dimensional, steady-state model was developed for the restored Jetty Creek channel. Geometric information for the restored creek channel was developed, in part, using topographic survey data. Cross-sections of the creek were modeled at 50-foot increments. The configuration of the each section varies to assess the impact of creek channel geometry on stream flow characteristics. A total of eight cross-sections were analyzed.

The following assumptions and simplifications were used in model development:

- Steady-State
- Peak flows as determined in Table 4-3
- Uniform channel slope (see Table 4-4)
- Channel cross-sections in restored channel were developed based (in part) on data used in ODOT's Jetty Creek project
- Uniform Manning's *n*-values for main channel and overbanks (see Table 4-4)
- Mixed flow regime
- Upstream and downstream boundary conditions based on normal depth with slope of 2%.

Table 4-4 – Restored Channel Characteristics

Restored Creek Channel Upstream Elevation (estimated)	45 feet
Restored Creek Channel Downstream Elevation (estimated)	37 feet
Restored Creek Channel Length (estimated)	25 feet
Average Restored Creek Channel Slope	2.8%
Manning's *n* – Main Channel[1]	0.06
Manning's *n* – Overbanks[2]	0.07

[1] Natural stream –winding, some weeds & stones, low stage, some pools and shoals
[2] Overbanks are vegetated with trees and brush

Results

The purpose of this model is to provide preliminary hydraulic estimates for the restored creek channel. These preliminary figures provide a starting point for final design and identify potential problems with respects to bank stabilization and fish passage requirements. A more robust model will need to be developed as part of the upcoming design efforts.

HEC-RAS was used to calculate a number of hydraulic parameters for the proposed Jetty Creek restored creek channel under various hydrologic conditions. Some of the parameters included:

- Velocity
- Critical, Normal, Maximum, Hydraulic Depths
- Channel Width

Stream velocities have a direct impact on bank erosion and stability as well as fish passage. Figure 4-3 shows the velocity profiles of the restored creek channel during various design flow conditions. Again, these velocities are only intended to provide project designers a general idea of expected hydraulic conditions of the rehabilitated stream.

Figure 4-3 – Creek Velocities

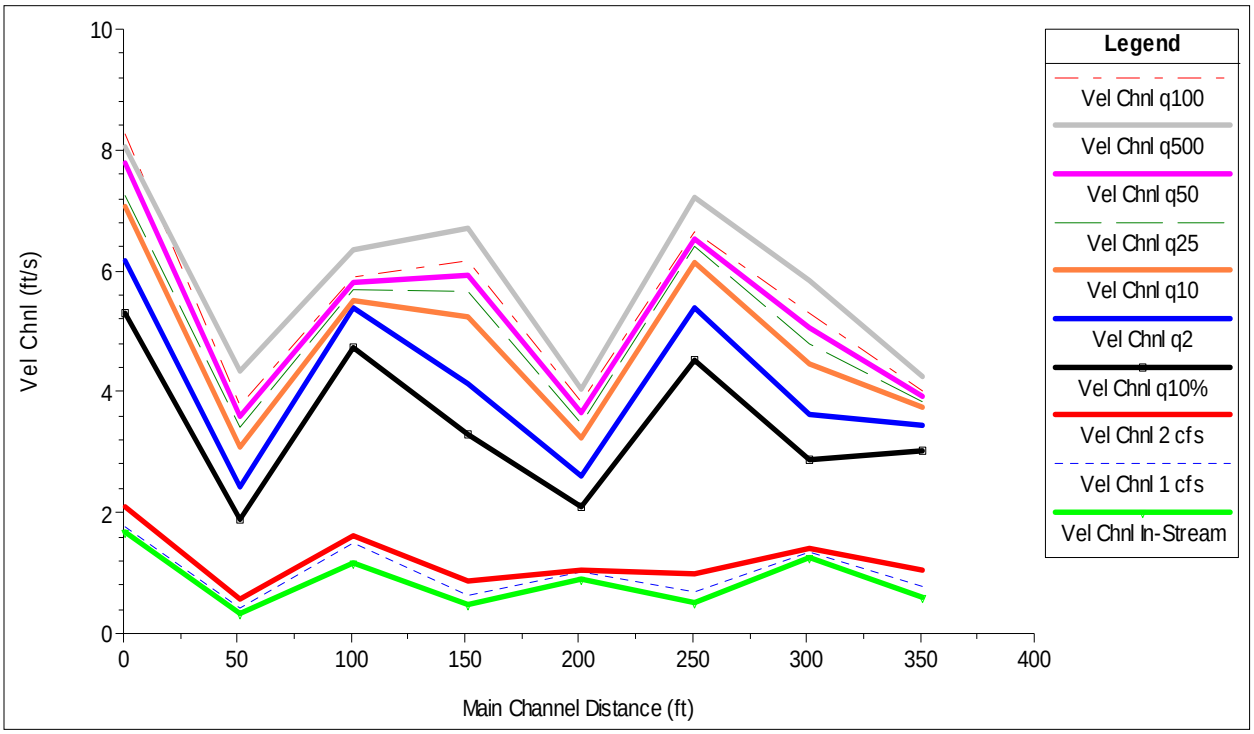

Stream stage at various flows is also an important design consideration. This will be particularly vital in the design of the new diversion structure. An estimate of the stream stage at the site of the new diversion structure during low and peak flow events is depicted in Figure 4-4.

Figure 4-4 – Water Surface Elevation vs. Stream Flow
(At location of new diversion structure)

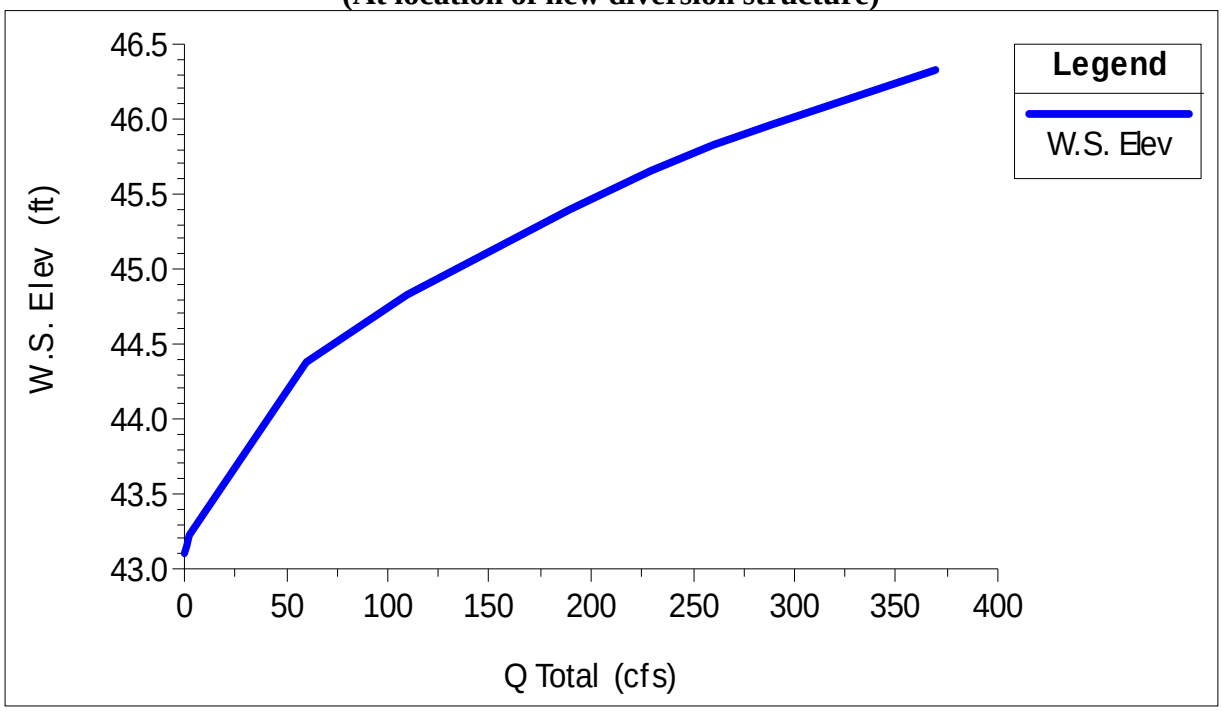

General results from this analysis indicate the following:

- Average channel velocities range from 0.3 fps (0.5 cfs) to 8.0 fps (Q_{100}). Maximum velocities occurred at downstream boundary.
- During low flows, channel depth was typically less than 0.5 feet. During peak flows, maximum water depth ranged from 1.8 feet (Q_2) to 3.1 feet (Q_{100}) with an average maximum depth of 2.4 feet.
- Peak flows generate channel widths ranging from 20.7 feet (Q_2) to 53.1 feet (Q_{100}) with an average of 30.1 feet.
- Shear force in the channel ranged from 0.5 psf (Q_2) to 5.2 psf (Q_{100}).

For more detailed results generated by HEC-RAS for the restored channel, see Appendix D.

SECTION 5

BIOLOGICAL RESOURCES

As part this *Feasibility Study*, an initial biological assessment of potential impacts from the proposed project, has been performed[2]. This assessment plays a vital role by identifying important plant and animals that may be impacted from the project or during its construction. In particular, this assessment focuses on potential impacts to special-status species.

Once special-status species within the project vicinity are identified, potential impacts are evaluated. Factors considered in evaluating project impacts include the species' primary constituent elements (PCEs) in the project vicinity, distribution and population levels of the species, the possibility of direct impact, the degree of impacts to habitat, and the potential to mitigate any adverse effects.

As part of this biological assessment, a variety of Federal, State, and local agencies have been contacted for consultation. A list of all contacted agencies and related correspondence is found in Appendix E.

5.1 Special-Status Species

Special-status species are defined as plants and animals that are legally protected under the Endangered Species Act (ESA), Oregon Endangered Species Act, and species that are considered sufficiently rare by the scientific community. The State of Oregon and the Federal government maintain separate lists of threatened and endangered species.

The National Oceanic and Atmospheric Administration (NOAA) Fisheries Division (NMFS) and the U.S. Fish and Wildlife Service (USFWS) share responsibility for implementing the Federal Endangered Species Act of 1973 (Public Law 93-205, 16 U.S.C. § 1531). NOAA Fisheries has jurisdiction to implement ESA requirements for anadromous (salmonid) species that migrate from the ocean to freshwater for spawning and rearing. The U.S. Fish and Wildlife Service has jurisdiction with respect to freshwater species, plants and animals.

The USFWS and NMFS maintain lists of all federally listed ESA species. USFWS identify species for each count in Oregon including listed species, proposed species, delisted species and other species of concern and is updated on a weekly basis. ESA species under NMFS authority are found online at http://www.nmfs.noaa.gov/pr/species/esa. Special-status species for Tillamook County can be accessed at http://www.fws.gov/oregonfwo/Species/Lists/Documents/County/TILLAMOOK%20COUNTY.pdf. Copies of these lists are included in the appendix.

Under State law (ORS 496.171-496.192) the Fish and Wildlife Commission through the Oregon Department of Fish and Wildlife (ODFW) makes policy decisions under the Oregon ESA regarding animal and fish species. The Department of Agriculture makes plant species determinations. Insects and butterflies are monitored by the Natural Heritage Program at Oregon State University.

[2] Much of the information in this section was obtained from the Batch Biological Assessment for US 101 Jetty Creek Culvert Replacement submitted by ODOT on May 8, 2008 and the corresponding Biological Opinion written by NOAA NMFS dated July 23, 2008.

The Oregon Natural Heritage Information Center (ORNHIC) acts as a repository for data on all sensitive, threatened and endangered species in Oregon. The ORNHIC identified all rare, threatened and endangered plant and animals within a 2 mile radius of the project site. These special-status species are listed in Table 5-1.

Table 5-1 – Special-Status Species in Project Vicinity

Species	Federal Status	State Status
Western snowy plover (*Charadriuss alexandrines nivosus)*	Listed - Threatened	Listed - Threatened
Chum salmon (*Oncorhynchus keta)*	None	Sensitive-Critical
Oregon Coast coho salmon (*Oncorhynchus kisutch)*	Listed - Threatened	Sensitive-vulnerable
Steelhead – Winter Run (*Oncorhychus mykiss)*	Species of Concern	Sensitive-vulnerable
Purple martin (*Progne subis)*	Species of Concern	Sensitive-Critical

Of the identified species listed in Table 5-1, the Oregon Coast coho salmon is the only species listed by the Federal ESA that has the potential to be impacted by the proposed project[3].

5.2 Oregon Cost Coho Salmon

The Oregon Coastal (OC) coho salmon was listed as threatened under the Federal ESA on February 11, 2008 and habitat critical to their survival and recovery was designated. This species includes all naturally spawned population of coho salmon in Oregon coastal streams south of the Columbian River and north of Cape Blanco, and progeny of five artificial propagation programs. The Oregon Coast Technical Recovery Team (OC-TRT) identified 56 historical populations, grouped into five major "biogeographic strata," based on historical distributions, geographic isolation, dispersal rates, genetic data, life history information, population dynamics, and environmental and ecological diversity.

OC coho are anadromous with significant juvenile freshwater residence, and require low-silt habitat in which to spawn and rear. OC coho salmon spawn from November to January, concentrated in riffle or gravel deposits at the downstream ends of pools. Fry emerge in March or April, then move into shallow stream bank areas. During summer, coho fry prefer pools and riffles with sufficient cover. Juvenile coho prefer to over-winter in large main stem pools, backwater areas, and secondary pools with significant cover. Juveniles rear in freshwater for up to 15 months before migrating out to estuaries.

[3] Project is too far inland to provide suitable habitat for Western snowy plovers.

The general factors contributing to the ESA listing for OC coho salmon include:

1. Habitat loss and degradation caused by water diversion and withdrawals for agriculture, flood control, domestic, and hydropower purposes
2. Habitat fragmentation and simplification caused by forestry, agriculture, mining, and urbanization
3. Sedimentation of spawning areas and loss of pool-forming structures such as boulders and large wood
4. Loss and degradation of riparian areas that provide stream shading, cover, nutrients, and other riparian functions
5. Destruction and modification of estuarine areas and wetlands that provide rearing and migration habitats
6. Historic overfishing
7. Introduction of non-native predatory species and habitat modification that result in increased predator populations
8. Predation by native seabirds and marine mammals
9. Introduction of exotic parasites and diseases through hatchery programs, and habitat modification (i.e. low water flows and high water temperatures) that exacerbate salmonid susceptibility to diseases.

More information about these factors, as well as detailed life history, can be found in the Federal Register documents that proposed and listed the OC coho salmon under the Federal ESA (60 FR 38011).

Distribution & Population Levels

The Nehalem River population of OC coho are classified as "functionally independent" within the North Coast Stratum[4].

The Jetty Creek population appears to represent a very small segment of the Nehalem River population of OC coho. In the 2003-2004 spawning survey season, it was surveyed 11 times with no fish observed. During this same season, fifty-seven other steams in the Nehalem River basin were found to have an average of 32 OC coho salmon adults per mile (from "Estimated Coho Spawner Abundance 2003-2004" on ODFW's Research Division website: http://oregonstate.edu/dept/ODFW/).

A significant reason for the low OC coho population counts in Jetty Creek is the historic presence of fish barriers. At the time of the 2003-2004 survey, a 7 foot perched culvert at Highway 101 impeded fish passage. In 2009, ODOT replaced this culvert with a bridge and new restored open channel. Due to this project, fish passage up Jetty Creek was extended approximately 1,000 feet upstream. At this point fish passage is again barred due to the City's impoundment, which is the last remaining fish barrier on Jetty Creek for nearly two miles.

Since Jetty Creek has characteristics making it suitable habitat for OC coho salmon to spawn, rear, and migrate, it is likely that removal of fish passage barriers will increase fish populations in the stream.

[4] A "functionally independent" population is one that would have had a high likelihood of persisting in isolation from neighboring populations for 100 years.

Primary Constituent Elements (PCEs) in Project Vicinity

The biological requirements of Oregon coastal coho salmon have been identified and categorized by the NMFS into primary constituent elements (PCEs) used in the designation of critical habitat. In making these critical habitat designations, NMFS considers those physical or biological features that are essential to the conservation of given species. In general features include space for individual and population growth and for normal behavior; food, water, air, light, minerals, or other nutritional or physiological requirements, cover or shelter; sites for breeding, reproduction, and rearing of offspring; and habitats that are protected from disturbance or are representative of the historical geographical and ecological distribution of a species.

Specific PCEs developed by NMFS for salmonid critical freshwater habitat include:

Table 5-2 –PCEs & Affected Life History Event in All OC Coho Salmon Critical Habitat

	Essential Physical & Biological Features	Affected Life History Event
Freshwater Spawning	Water quality, water quantity, and substrate	Spawning, incubation, and larval development
Freshwater Rearing	Water Quantity and floodplain connectivity	Juvenile growth and mobility
	Water quality and forage	Juvenile development
	Natural cover[1]	Juvenile mobility and survival
Freshwater Migration	Free of artificial obstructions, water quality and quantity, and natural cover[2]	Juvenile and adult mobility and survival

[1] Natural cover includes shade, large wood, log jams, beaver dams, aquatic vegetation, large rocks and boulders, side channels, and undercut banks.
[2] Forage includes aquatic invertebrate and fish species that support growth and maturation.

Both upstream and downstream of project site, Jetty Creek provides suitable habitat for OC coho salmon to spawn, rear, and migrate. The NMFS Critical Habitat Analytical Review Team (CHART) rated the Lower Nehalem River/Cook Creek 5th field HUC ***high*** for conservation and corridor value due to:

- A complex mixture of pool and riffle habitats, gravel bars, and an abundance of gravel substrates suitable for spawning, especially for adult OC coho salmon that are able to surmount the passage barriers posed by the existing impoundment dam.

- Water temperatures which remain cool and clear throughout the summer, providing favorable thermal conditions for resident cut throat trout, first-year OC coho fry, sculpin, crayfish, and lamprey.

Potential Direct Impacts of Project

The restoration of the relict channel on Jetty Creek will reconnect the upstream and downstream reaches of Jetty Creek within the vicinity of the WTP. With proper design and construction, the relict channel will provide enhanced structural complexity and aquatic habitat in the vicinity. This will be accomplished by:

- Placement of large wood and rock structures
- Establishment of pool-riffle or step-pool morphology
- Re-establishment of transport capacity including the movement and sorting of gravels.

As a result of the restoration of the relict channel on Jetty Creek, an immediate benefit will be provided by removing a significant fish passage barrier and opening up 1.8 miles of stream channel to salmonid and other fish species.

Although this project is expected to have an overall beneficial impact, there may be some temporary and short-term adverse impacts that should be addressed.

The PCEs potentially affected by the proposed project are water quality, riparian vegetation, cover/shelter, food resources, water velocities, substrate, spawning gravel, and safe passage. The likely effects of the project on these essential features are listed below:

Water Quality

Excavation of impoundment and restoration of historic channel will likely elevate suspended sediments temporarily in Jetty Creek. As a result, water quality will suffer localized, temporary degradation during the first few fall storms when sediment derived from site erosion and re-suspension of deposited sediment from in-water work is entrained into stream flow. Decreasingly small pulses of sediment (re-suspension lasting a few hours to a day) may continue for the next several months during bankfull flows until all disturbed materials in the construction area settle into place.

The potential for increased TSS and turbidity should be localized and brief, and the probability of mortality is negligible. OC coho salmon that are not within isolated work area will likely have exposure to very low levels (if any) of turbid water associated with the construction since the work area will be isolated. In-water work will take place during the low flow period, which corresponds with the time of year that we expect fewer OC coho salmon.

As with all construction activities, accidental release of fuel, oil, and other contaminants may occur. The probability of this occurring is very low, but no discountable. Petroleum based contaminants, such as fuel, oil, and some hydraulic fluids, contain polycyclic aromatic hydrocarbons, which can kill salmon at high levels of exposures and can also cause sublethal adverse effects at lower concentration.

Riparian Vegetation and Cover/Shelter

This project will require removal of some existing trees and vegetation in order to re-establish the relict creek channel. Site restoration will include planting native trees and vegetation in all areas affected by construction to maintain sufficient coverage to ensure water temperatures are not adversely affected. The upper temperature limit for coho is approximately to 77 °F. Large wood will also be placed in restored creek to increase habitat value.

Food Resources

Sedimentation will temporarily reduce food resources of juvenile OC coho salmon, but impacts would overlap potential OC coho salmon presence for only approximately 2 months the first year after construction. After the isolation area is re-watered, macroinvertebrates would be expected to quickly re-colonize the area from upstream sources.

If a large chemical spill occurred, it would affect invertebrate communities, but the effects would be insignificant by the time juveniles moved into the area in the fall due to the spill control and cleanup plan.

Water Velocities

Upper limits for water velocity are 6.6 ft/sec for adults and 2.0 ft/sec for juveniles. Restoration of the relict Jetty Creek channel will result in water velocities appropriate for adult and juvenile OC coho salmon. This will provide beneficial stream flow conditions during migration periods, enabling OC coho salmon to have easier access to spawning and rearing habitat. Boulder and large wood placement will create hydraulic shadow, which will be beneficial for OC coho salmon adult and juvenile migration and rearing.

Substrate and Spawning Gravel

As a likely effect of sedimentation due to construction and erosion, filling of interstitial spaces and increased interstitial flow due to the channel restoration from September to November of the first year may be expected. Impacts to spawning gravel are likely to be minimal because deposited sediment is likely to be carried away in October and November. Most spawning occurs in December and January.

Safe Passage

Upstream passage does not currently exist because of the City's impoundment dam. Restoring the historic channel bed to bypass the City's impoundment will significantly improve fish passage and access to 1.8 miles of spawning and rearing habitat on Jetty Creek. Beneficial stream flow conditions during migration periods will enable OC coho salmon to have easier access to spawning and rearing habitat. Placement of large wood and boulders will reduce water velocities through the project area, allowing for easier migration, additional rearing habitat, and significantly improve fish passage. Using rocks for grade control will reduce the potential formation of scour pools as well as reducing the risk of head-cut formation and a passage barrier.

Although some PCEs will be adversely affected, these effects will be temporary and are not likely to meaningfully change the conservation value of Jetty Creek. Effects to water quality, food resources substrate, spawning gravel, and safe passage are all localized and short-term. The cover/shelter, food resources, substrate and spawning gravel, and water velocity PCEs will have long-term benefits because of the fish passage improvements. None of the impacts are expected to measurably change the water temperature or water chemistry.

Mitigation

The proposed project is reasonably likely to have the following direct and indirect effects on ESA listed salmon.

1. Short-term elevation of turbidity and sediment within and immediately downstream from the construction areas.
2. Disturbances of the bed and banks of the wetted stream channels
3. Potential chemical contamination from fuel and lubricant spills within the wetted channels.

Mitigations measures will need to be incorporated into final design and construction to minimize any detrimental effects on OC coho salmon. These may include the following:

- **Work Area Isolation** – All in-water construction activities should be isolated from the main creek system by means such as coffer dams. Work isolation is intended to reduce potential effects to water quality and fish from in-stream construction. However, if fish are present within isolated work areas, these fish should be captured handled, and released. If pumps are used for temporary water management, NMFS screening guidelines will be used. The risk of death or injury is very low due to work-area isolation.

- **Scheduling** – In-water work for this project will be completed during the period of July 1 to September 15, when the fewest OC coho salmon are expected to be present, therefore limiting exposure to few individuals. Restoration work on the relict channel should be done while all Jetty Creek is still diverted through the City's impoundment.

- **Revegetation** – Site restoration, which will include planting native trees and vegetation in all areas affected by construction.

- **Channel Restoration -** Channel restoration will need to be completed to the re-establish relict channel. Rock will be used for grade control to minimize the risk of a head-cut. This will reduce the potential for scour fool formation, but will benefit migration and passage to the spawning and rearing areas upstream. The proposed project will affect two limiting factors (sediment and loss of large wood) in the Lower Nehalem River/Cook Creek watershed. Adding large wood for rear habitat and reestablish and restoring the historic stream channel will have beneficial effects due to a larger channel opening improving large wood transport.

- **Pollution Control Plan (PCP)** – Intended to reduce the risk of contamination due to chemical spills.

- **Sedimentation and Erosion Control Plan (SECP) -** A SECP is intended to reduce the amount of sedimentation and erosion occurring at a project site due to construction activities. A SECP will incorporate appropriate best management practices (BMPs) and require various monitoring reports to be completed throughout constructions.

Additional avoidance, minimization, and conservation measures may be agreed upon by government representatives, as conditions of the resulting Federal and State consultations. Failure to meet these conditions may have repercussions to the project.

This page was intentionally left blank.

.

SECTION 6

WATER RIGHTS ANALYSIS

Under Oregon law, all water is publicly owned. With some exceptions, cities, farmers, factory owners, and other water users must obtain a permit or water right from the OWRD to use water from any source; whether it is underground, or from lakes or streams.

Oregon's water laws are based on the principle of prior appropriation. This means the first person to obtain a water right on a stream is the last to be shut off in times of low stream flows. In water-short times, the water right holder with the oldest date of priority can demand the water specified in their water right regardless of the needs of junior users. If there is a surplus beyond the needs of the senior right holder, the water right holder with the next oldest priority date can take as much as necessary to satisfy needs under their right and so on down the line until there is no surplus or until all rights are satisfied. The date of application for a permit to use water usually becomes the priority date of the right.

6.1 Existing Water Rights

Existing City Water Rights

The City of Rockaway Beach has a number of water rights under which they are permitted to divert and use water for municipal purposes. Of these sources, surface water from Jetty Creek supplies the majority of water to meet the City's water demands. Water Right Permit Numbers S34498 and S46245 allow the City to withdraw up to 2.0 cubic feet per second (896 gallons per minute) from Jetty Creek. The City also utilizes water rights from three wells to supplement stream flows, particularly in summer.
Table 6-1 gives a summary of Rockaway Beach's water rights.

Table 6-1 – Summary of the City of Rockaway Beach's Water Rights

Source	Certificate Number	Permit Number	Water Right CFS (gpm)	Year Issued
Jetty Creek	**47952**	**S 34498**	**1.00 (448)**	**1969**
Jetty Creek	**None**	**S 46245**	**1.00 (448)**	**1981**
McMillan Creek	26097	S 17176	0.26 (116)	1946
McMillan Creek	30421	S 25396	0.26 (116)	1958
McMillan Creek	30423	S 26296	0.50 (224)	1959
Heitmiller Creek	2201	S 925	2.50 (1,120)	1911
Heitmiller Creek	38987	S 27861	0.50 (224)	1962
Spring Creek & Steinhelber Creek	936	S 1081	0.50 (224)	1912
Rock Creek	2386	S 51	5.00 (2,240)	1909
Well No. 1 (West)	**82449**	**G 9365**	**0.39 (175)**	**1981**
Well No. 2 (East)	**82449**	**G 9365**	**0.39 (175)**	**1981**
Well No. 3 (Manhattan)	**None**	**G 15325**	**0.22 (100)**	**2002**

**Bolded indicates sources is presently used by City

As noted above, the City of Rockaway Beach has two surface water rights granted on Jetty Creek, each allowing for a maximum withdrawal of 1.0 cfs. Only one of these water rights has been certified by the State. Copies of these permits are available in the appendix.

OWRD has characterized the City's raw water impoundment on Jetty Creek as a "settling pond" due to the relatively small size of the facility. For this reason, the City is not required to have a storage water right for its water holding. After reviewing the proposed changes to the City's impoundment, OWRD has determined that the expansion would not constitute a large enough increase to water storage capability to require the City to obtain a storage water right permit. This determination was made during a meeting between the City and OWRD in June of 2010.

In-Stream Water Right

In 1968, legislation was passed to allow minimum stream flow requirements to be established in some reaches of rivers and streams in Oregon to protect fish and other wildlife. In-stream water rights have a priority date and are regulated in the same way as other water rights.

An in-stream water right to support aquatic life was established for Jetty Creek in May of 1981 (Certificate 59625). The minimum flow requirements and seasonal time frames are shown in Table 6-2.

Table 6-2 - Seasonal In-Stream Water Right

Time Period	Minimum Flow (CFS)
Oct 1 - Oct 15	2.0
October 16 – March 31	5.0
April 1 – September 30	0.5

Based on priority dates, the in-stream water right is junior to the City's certified water right (priority date 12/8/1696), but senior to the City's second water right permit on Jetty Creek (priority date 6/24/1981). This means that flows in Jetty Creek must be sufficient to meet the in-stream water right before the City may withdraw water under its second water right for general municipal use. However, language on the in-stream water includes the following:

> "This in-stream water right shall not have priority over the right to use water for human consumption, livestock consumption, or the use of waters legally released from storage."

Therefore, the City may divert water from Jetty Creek flows if the water is only used for human consumption. To do so would require a ban on all water not specifically used for human consumption. The City has already adopted a Water Curtailment Plan, which could be used to implement such a ban.

6.2 Jetty Creek Source Adequacy & Reliability

Currently, the City's maximum daily demand (MDD), which typically occurs in July, is 0.866 mgd. The projected MDD for the year 2028 is estimated at 1.15 mgd. Although the City's Jetty Creek water rights allowance is more than sufficient to meet future peak demand, actual stream flows are often insufficient to meet the City's full water demand.

Figure 6-1 compares the City's average daily demand (ADD) and MDD to the 95% exceedance flows in Jetty Creek as determined in Section 4.1 of this report. This figure also notes the City's and in-stream water rights.

Figure 6-1 – Jetty Creek Stream Flows vs. Water Demands

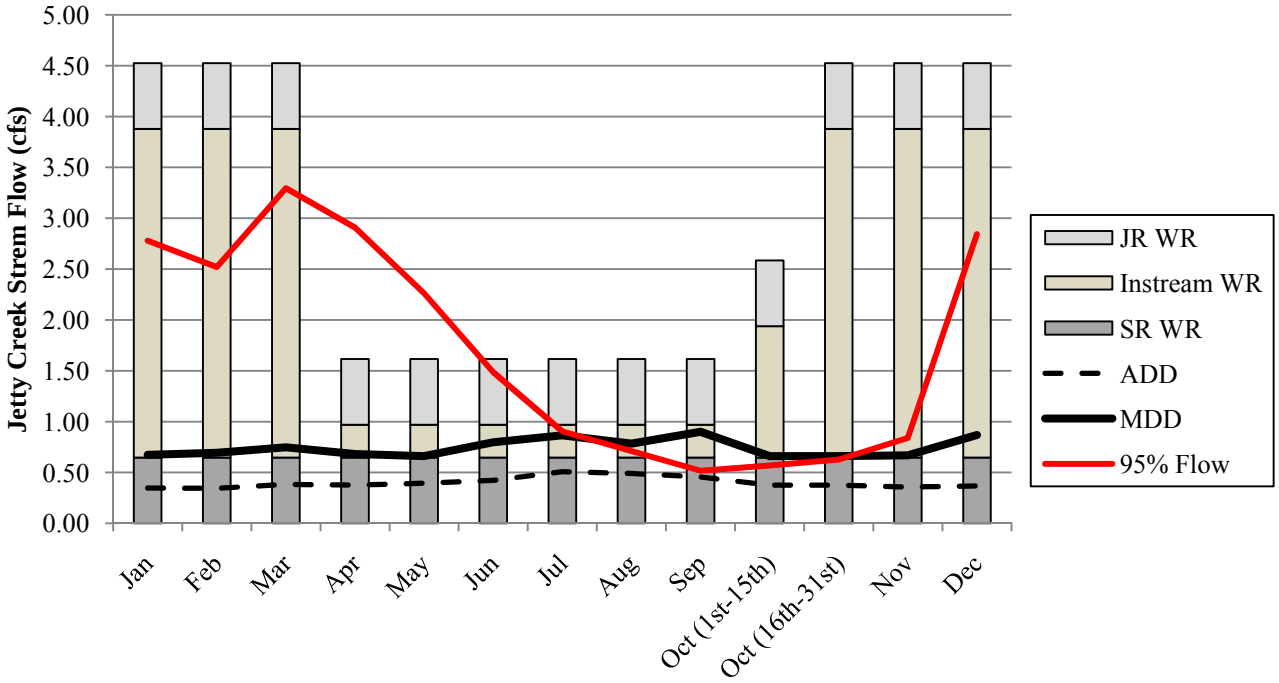

Additional detailed information on water rights, available flow, and water demands is provided in the following table.

Table 6-3 – Summary of Water Demands & Jetty Creek Reliability

	Water Rights		Available Water for Municipal Use		City's Daily Demand[1]	
	Req. Flow for full WR (mgd)	Req. Flow Met	Average Flow (mgd)	95%Flow (mgd)	ADD. (mgd)	MDD (mgd)
January	4.524	82.1%	1.293	0.646	0.347	0.673
February	4.524	84.3%	1.293	0.646	0.344	0.694
March	4.524	85.5%	1.293	0.646	0.383	0.747
April	1.616	100.0%	1.293	1.293	0.375	0.681
May	1.616	100.0%	1.293	1.293	0.394	0.662
June	1.616	90.5%	1.293	1.163	0.423	0.796
July	1.616	52.8%	1.293	0.646	0.508	0.866
August	1.616	14.3%	0.944	0.711	0.490	0.784
September	1.616	28.0%	1.293	0.517	0.456	0.900
October (1st-15th)	2.585	18.2%	0.646	0.569	0.376	0.661
October (16th-31st)	4.524	22.6%	0.646	0.627	0.376	0.661
November	4.524	71.1%	1.293	0.646	0.357	0.669
December	4.524	85.6%	1.293	0.646	0.367	0.869

[1] Based on the City's 2007 Water Master Plan

- *Water Rights* – This column quantifies the total flow required to meet the City's two water rights as well as the corresponding in-stream water right based on Table 6-2. Because one of the City's water rights is junior to the in-stream right, this required flow indicates the minimum flow that needed for the City to withdraw its full 2.0 cfs water right. This column also includes the percentage of days this minimum flow requirement is met.

- *Available Water for Municipal Use*– This column shows the average and 95% exceedance of water available for the City's diversions. Available water is determined based on the following equations:

$$
\begin{array}{lcl}
SF \leq 1.0 \text{ cfs} & \rightarrow & AW = SF \\
1.0 \text{ cfs} < SF \leq 1.0 \text{ cfs} + IWR & \rightarrow & AW = 1.0 \text{ cfs } (0.646 \text{ mgd}) \\
1.0 \text{ cfs} + IWR < SF \leq 2.0 \text{ cfs} + IWR & \rightarrow & AW = SF - IWR \\
2.0 \text{ cfs} + IWR \leq SF & \rightarrow & AW = 2.0 \text{ cfs } (1.293 \text{ mgd})
\end{array}
$$

  Where:

  SF = Jetty Creek stream flow (see Section 4.1 for analysis)
  IWR = In-stream water right (see Table 6-2)
  AW = Available water for City diversion

- *City's Daily Water Demand* – This column lists the City's average daily demand (ADD) and maximum daily demand (MDD) for each month based on information from the City's Water Master Plan.

Information from Table 6-3 and Figure 6-1 can be used to determine the adequacy of the City's Jetty Creek water rights to meet the municipal water needs for Rockaway Beach. Key findings of this analysis include:

- *Average Available Water* and *95% Available Water* in Jetty Creek is sufficient to meet current ADD for all months.
- *Average Available Water* in Jetty Creek is sufficient to meet current MDD for all months.
- *95% Available Water* is **not** sufficient for most monthly MDD. April, May, and June are the only months with sufficient flows 95% or more days.
- Limitations on available water in winter months (November – March) are typically a result of the high in-stream water right requirement rather than low stream flows.

The City will need to supplement its Jetty Creek source using a combination of water from other sources as well as raw and treated water storage supply.

6.3 Impact of Project on Water Rights

The proposed project will require the City to make modifications to its existing water rights on Jetty Creek. Based on conversations with the regional Water Master and OWRD Water Rights Specialist, constructing a diversion structure upstream of the existing impoundment will constitute a change in the point of diversion (POD). As a result, the City will be required to modify its existing water rights or apply for new rights.

Transferring Water Rights

The use of water under a water right is restricted to the terms and conditions described in the water right certificate including place of use, point of diversion, and type of use. When a water right holder plans to make changes to these conditions, a transfer application must be filed with OWRD.

To approve a transfer application, the OWRD must determine that the proposed change will not injure other water rights. A public comment period is initiated to allow other users and agencies an opportunity to protest and a hearing may be held. As a result, conditions of approval may be included in order to eliminate potential injury to other water rights. If conditional approval will not eliminate injury, the application is denied. The proposed change cannot occur until after the transfer order is issued from the State

Once transfer is approved, the proposed change may be implemented. After the modification is completed, the water right may be certified following standard procedures and a new water right certificate will be issued to confirm the modified water right.

The major benefit of a water transfer is that there would be no change in the City's existing priority dates: however, the City's junior water right permit authorization date expired in October 1998. As a result, the City must file for a permit extension prior to submitting an application to transfer the water right. Review and approval of a permit extension may take between 2 to 3 years, which could seriously delay this project.

New Water Right

The City may consider applying for a new water right at the new point of diversion. However, rights are not automatically granted. Opportunities are provided for other water right holders and the public to protest the issuance of a permit. Water users can assert that a new permit may injure or interfere with their water use, and the public can claim that issuing a new permit may be detrimental to the public interest.

The major disadvantage of this approach is that a new priority date would be assigned to the City's water rights on Jetty Creek. Consequently, both of the City's water rights would be junior to the in-stream water right, meaning that no municipal diversion would be allowed until the full in-stream water was met. This could significantly reduce the amount of water available for City's use.

The impact of changing the City's priority date is displayed in the following table. This table shows the amount of water available to the City currently as well as what could be withdraw if the City's water rights' priority dates changed. Months when available flow decreases as a result of the priority date change are highlighted. Bold values indicate when stream flows are insufficient to meet in-stream flow requirements, therefore, no water would be available for the City's use.

Table 6-4 – Impact of New Water Right Priority

	Jetty Creek Stream Flows		Available Water for Municipal Use (Current Priority Date)		Available Water for Municipal Use (Changed Priority Date)	
	Average Flow (mgd)	95%Flow (mgd)	Average Flow (mgd)	95%Flow (mgd)	Average Flow (mgd)	95%Flow (mgd)
January	11.393	2.779	1.293	0.646	1.293	**-1.099**
February	11.598	2.521	1.293	0.646	1.293	**-1.357**
March	9.557	3.296	1.293	0.646	1.293	**-0.582**
April	7.127	2.908	1.293	1.293	1.293	1.293
May	4.501	2.262	1.293	1.293	1.293	1.293
June	3.402	1.487	1.293	1.163	1.293	1.163
July	2.126	0.905	1.293	0.646	1.293	0.582
August	1.267	0.711	0.944	0.711	0.944	0.388
September	1.635	0.517	1.293	0.517	1.293	0.194
October (1st-15th)	1.811	0.569	0.646	0.569	0.518	**-0.724**
October (16th-31st)	3.623	0.627	0.646	0.627	0.391	**-2.605**
November	9.015	0.840	1.293	0.646	1.293	**-2.391**
December	12.217	2.844	1.293	0.646	1.293	**-0.388**

Figure 6-2 shows the percentage of days each month where available water in Jetty Creek meets or exceeds the City's currently certified 1.0 cfs water right. As the graph shows, with the current priority date of 12/8/1969, this water right is met 100% except for the months of September through November. Early October had the fewest days meeting the required stream flow. By changing the City's water right priority date, the City's ability to withdraw 1.0 cfs from Jetty Creek greatly diminishes.

Figure 6-2 – Percent of Days where Stream Flows meet City's 1.0 cfs Water Right

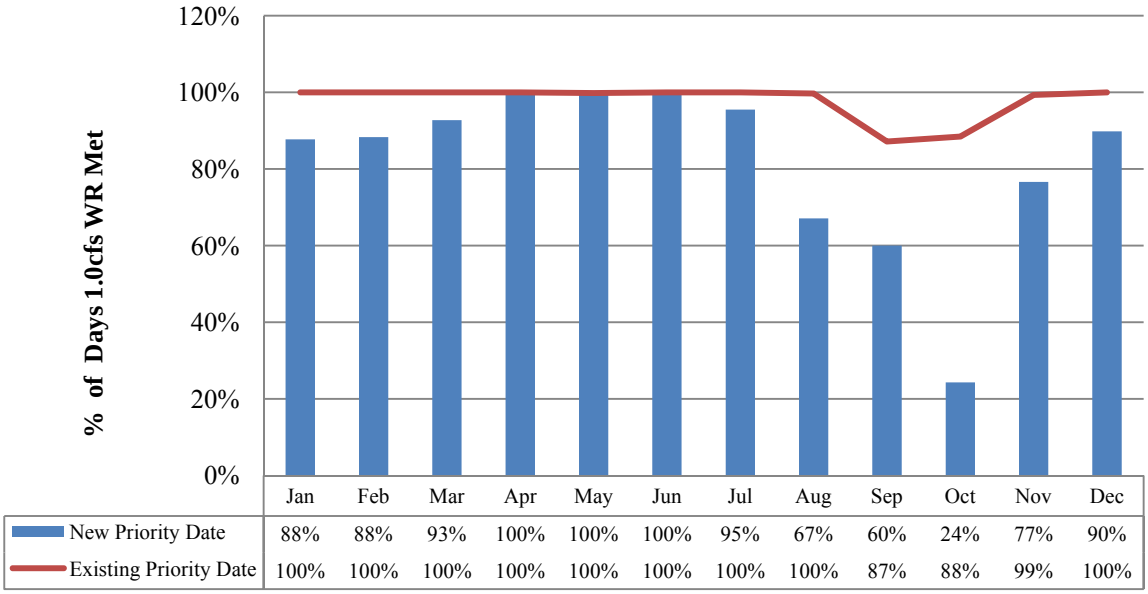

Attachment G: Jetty Creek Impoundment Improvements Design Sheets

HBH Consulting Engineers

Jetty Creek Fish Passage Restoration
Lower Nehalem Watershed Council

OWRD Water Supply Development Account
Loan and Grant Application

JETTY CREEK IMPOUNDMENT IMPROVEMENTS

ROCKAWAY BEACH, OREGON

April 14, 2011

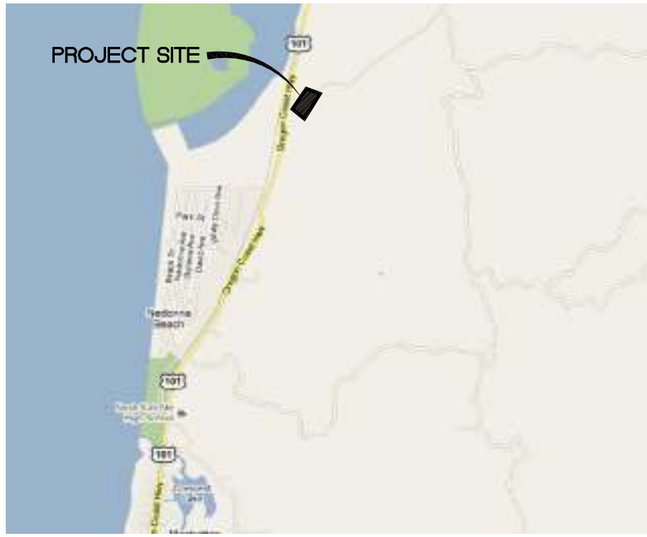

VICINITY MAP

SCALE: NTS

ABBREVIATIONS

@	AT	P/L	PROPERTY LINE
AC	ASPHALT	PVC	POLYVINYL CHLORIDE
BV	BUTTERFLY VALVE	PVI	POINT OF VERTICAL INTERSECTION
CB	CATCH BASIN	ROW	RIGHT OF WAY
C/L	CENTERLINE	RT	RIGHT
CMP	CORRUGATED METAL PIPE	S	SOUTH
CO	CLEAN OUT	SE	SOUTH EAST
COTG	CLEAN OUT TO GRADE	SW	SOUTH WEST
CY	CUBIC YARDS	STM	STORM DRAIN
DR	DRIVE	SF	SQUARE FEET
DIP	DUCTILE IRON PIPE	SAN	SANITARY SEWER
E	EAST	ST	STREET
ELEV	ELEVATION	STA	STATION
EP	EDGE OF PAVEMENT	S=	SLOPE EQUALS
EX	EXISTING	S/W	SIDEWALK
FLG	FLANGE	TB	THRUST BLOCK
GUT	GUTTER	TYP	TYPICAL
GV	GATE VALVE	VER	VERTICAL
HDPE	HIGH DENSITY POLYETHYLENE	W	WEST
HOR	HORIZONTAL	W/	WITH
HP	HIGH POINT	WTR	WATER
HYD	HYDRANT		
IE	INVERT ELEVATION		
LF	LINEAR FEET		
LN	LINE		
LP	LOW POINT		
LT	LEFT		
MH	MANHOLE		
MJ	MECHANICAL JOINT		
N	NORTH		
NE	NORTH EAST		
NTS	NOT TO SCALE		
NW	NORTH WEST		
PC	POINT OF CURVATURE		
PRC	POINT OF REVERSE CURVE		
PT	POINT OF TANGENCY		

TAX LOT, PROJECT ADDRESS INFORMATION

THIS PROJECT WILL BE LOCATED SECTION 17, TOWNSHIP 2N, RANGE 10W, TAXLOT 107 (LOT 3) OF THE WILLAMETTE MERIDIAN WITHIN TILLAMOOK COUNTY, STATE OF OREGON.

FUNDING STATEMENT

WORK UNDER THIS CONTRACT WILL BE FUNDED IN PART FROM THE OREGON WATERSHED ENHANCEMENT BOARD (OWEB).

LOCATE

(48 HOUR NOTICE PRIOR TO EXCAVATION)

OREGON LAW REQUIRES YOU TO FOLLOW THE RULES ADOPTED BY THE OREGON UTILITY NOTIFICATION CENTER. THOSE RULES ARE SET FORTH IN OAR 952-001-0010 THROUGH 952-001-0090 & ORS 757.542 THROUGH 757.562 AND ORS 757.993. YOU MAY OBTAIN COPIES OF THE RULES FROM THE CENTER BY CALLING (503) 246-1987. ONE CALL SYSTEM NUMBER 1-800-332-2344.

OWNER:

CITY OF ROCKAWAY BEACH
ROCKAWAY BEACH, OREGON 97136
MARK GUNTER
PH: (503) 355-2291
FAX: (503) 355-8221

CIVIL ENGINEER

HBH CONSULTING ENGINEERS, INC.
20055 SW PACIFIC HWY, SUITE 201
SHERWOOD, OREGON 97140
CONTACT: MICHAEL D HENRY, ENGINEER
PH: (503) 625-8065
FAX: (503) 625-1531

SURVEYOR

HBH CONSULTING ENGINEERS, INC.
20055 SW PACIFIC HWY, SUITE 201
SHERWOOD, OREGON 97140
CONTACT: JOHN PARIANI
PH: (541) 890-1131

SHEET INDEX

SHEET 1	COVER
SHEET 2	EXISTING CONDITIONS & DEMO PLAN
SHEET 3	EROSION CONTROL PLAN
SHEET 4	GRADING PLAN
SHEET 5	CROSS SECTIONS
SHEET 6	CREEK RESTORATION
SHEET 7	CREEK DETAILS
SHEET 8	CREEK DETAILS
SHEET 9	IMPOUNDMENT
SHEET 10	LINER DETAILS
SHEET 11	WALL DETAILS
SHEET 12	DAM IMPROVEMENTS
SHEET 13	INTAKE SCREEN
SHEET 14	INTAKE SCREEN SECTIONS
SHEET 15	INTAKE SCREEN AIR BURST
SHEET 16	CIPOLETTI WEIR
SHEET 17	INTAKE SCREEN REBAR PLAN
SHEET 18	FLOW CONTROL STRUCTURE REBAR PLAN
SHEET 19	AIR COMPRESSOR & BUILDING SLAB
SHEET 20	INTAKE SCREEN PROCESS CONTROL
SHEET 21	MISC. DETAILS
SHEET 22	MISC. DETAILS

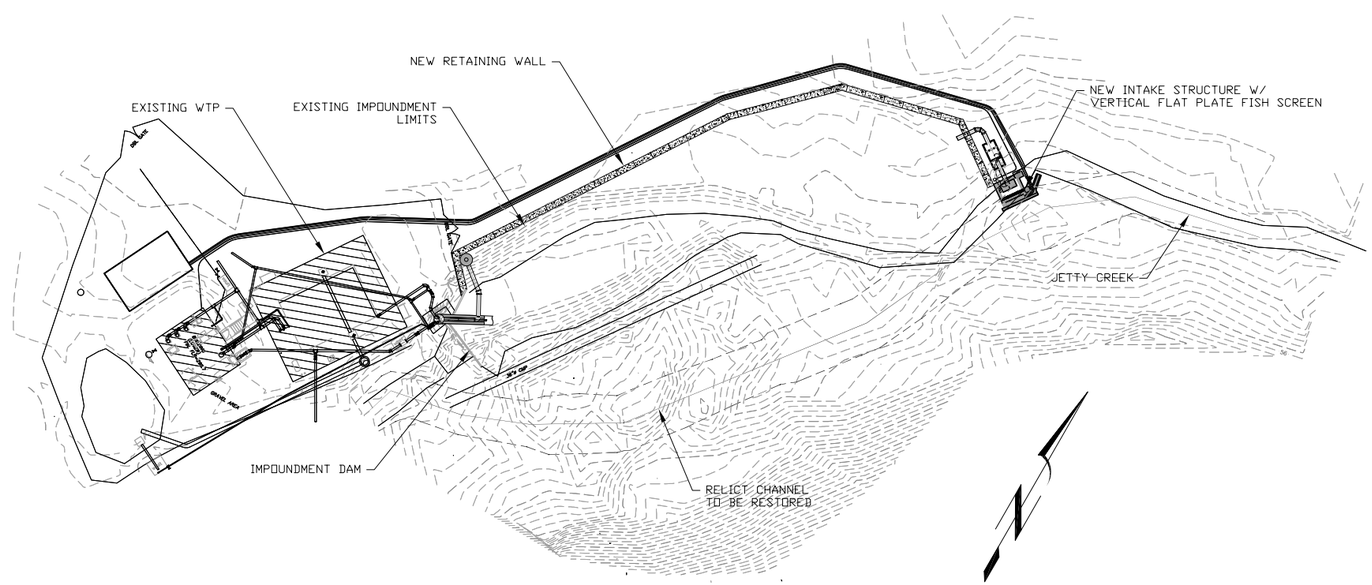

SITE PLAN

SCALE: 1" = 30'

REGISTERED PROFESSIONAL ENGINEER 5465 OREGON JULY 25, 1981 DAVID K. BONTHAIN
EXPIRES 12/31/2011

H B H
Consulting Engineers
20055 SW Pacific Hwy, Suite 201
Sherwood, Oregon 97140
503/625-8065 ■ fax 503/625-1531
email: mail@hbh-consulting.com

Designed By: BEC | Drawn By: BEC | Checked By: MDH | Submittal No: PRELIMINARY
File: L:/2004.27.17/DWG/Cover | Layout: COVER

REV.	DATE	DESCRIPTION	BY

0" 1"
IF THIS LINE IS NOT 1 INCH SCALE IS NOT AS SHOWN

CITY OF ROCKAWAY BEACH
P.O. BOX 5, BAY CITY, OR 97136

IMPOUNDMENT IMPROVEMENTS
ROCKAWAY BEACH, OREGON
COVER

Sheet No. 1 of 22
Date 4/14/11
2004.27.17

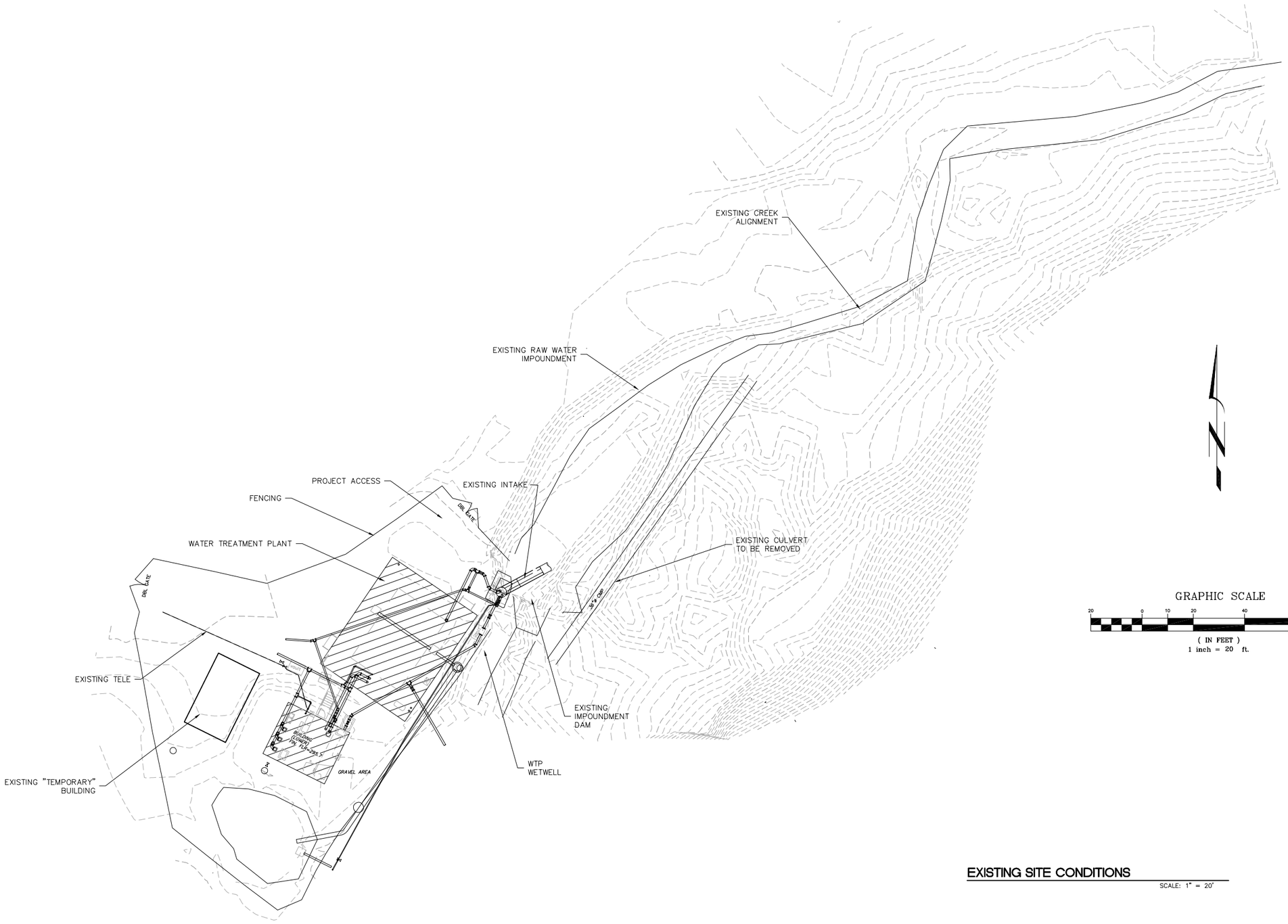

GRAPHIC SCALE

20 0 10 20 40 80

(IN FEET)
1 inch = 20 ft.

EXISTING SITE CONDITIONS

SCALE: 1" = 20'

REGISTERED PROFESSIONAL ENGINEER 15458 OREGON JULY 25, 1961 DAVID K. BOATMAN

EXPIRES 12/31/2009

H B H
Consulting Engineers
20055 SW Pacific Hwy, Suite 201
Sherwood, Oregon 97140
503/625-8065 ■ fax 503/625-1531
email: mail@hbh-consulting.com

Designed By: CLL | Drawn By: CLL | Checked By: DKB | Submittal No: PRELIMINARY
File: L:\2004-027-17\DWG\GRADING | Layout: EXISTING

REV.	DATE	DESCRIPTION	BY

0" 1"
IF THIS LINE IS NOT 1 INCH SCALE IS NOT AS SHOWN

CITY OF ROCKAWAY BEACH
P.O. BOX 5, BAY CITY, OR 97136

IMPOUNDMENT IMPROVEMENTS
ROCKAWAY BEACH, OREGON

EXISTING CONDITIONS AND DEMO PLAN

Date: 4/14/11
Sheet No. 2 of 22

2004-027-17

CONSTRUCTION NOTE:

1. INSTALL SEDIMAT (TM) IN CREEK BED. REPLACE AS REQUIRED.
2. INSTALL SEDIMAT (TM) IN CREEK BED, TURN 1/3 OF MAT 90° VERTICAL ON DOWNSTREAM SIDE AND STAKE IN PLACE (SEE DETAIL BELOW). REPLACE AS REQUIRED
3. INSTALL FLEXISTAK SUPERSACK CONTAINERS FOR TEMPORARY BARRIER. STACK AS REQUIRED. (2 SACK MIN)
4. TEMPORARY PUMP FOR BYPASS PUMPING . USE TRAILER MOUNTED PUMP WITH FISH SCREEN (SCREEN OPENINGS 3/32") WEIGHT DOWN WITH BLOCKS. PLACE OIL SOLVENT ABSORBENT MAT UNDER TRAILER TO CATCH SPILLAGE/LEAKAGE.
5. SEED DISTURBED AREAS
6. INSTALL COMPOST AND WILLOW SPIKES PER STAKING DETAIL, SEE SHT 8
7. INSTALL GRAVEL CONSTRUCTION ENTRANCE

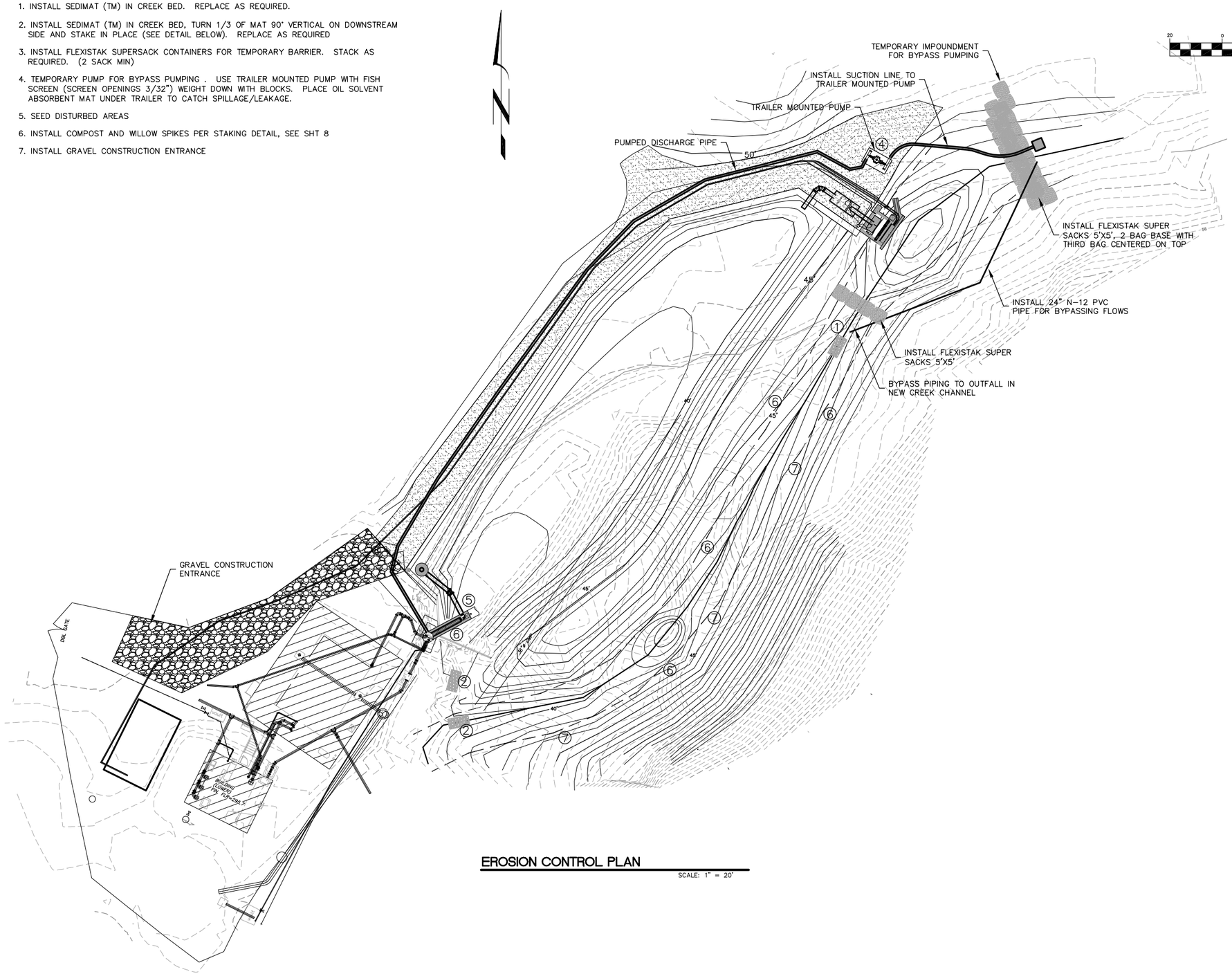

EROSION CONTROL PLAN

SCALE: 1" = 20'

REGISTERED PROFESSIONAL ENGINEER 15458 OREGON JULY 25, 1971 DAVID K. BOATMAN

EXPIRES 12/31/2011

H B H Consulting Engineers
20055 SW Pacific Hwy, Suite 201
Sherwood, Oregon 97140
503/625-8065 ■ fax 503/625-1531
email: mail@hbh-consulting.com

Designed By:	Drawn By:	Checked By:	Submittal No:	
BEC	BEC	DKB	PRELIMINARY	
File:	L:/2004-27-17/DWG/EROSIONCONTROL		Layout	LAYOUT1

REV.	DATE	DESCRIPTION	BY

0" 1"
IF THIS LINE IS NOT 1 INCH SCALE IS NOT AS SHOWN

CITY OF ROCKAWAY BEACH
P.O. BOX 5, BAY CITY, OR 97136

IMPOUNDMENT IMPROVEMENTS
ROCKAWAY BEACH, OREGON

EROSION CONTROL PLAN AND WETWELL SCREEN

Sheet No. 3 of 22

Date 4/14/11

2004-27-17

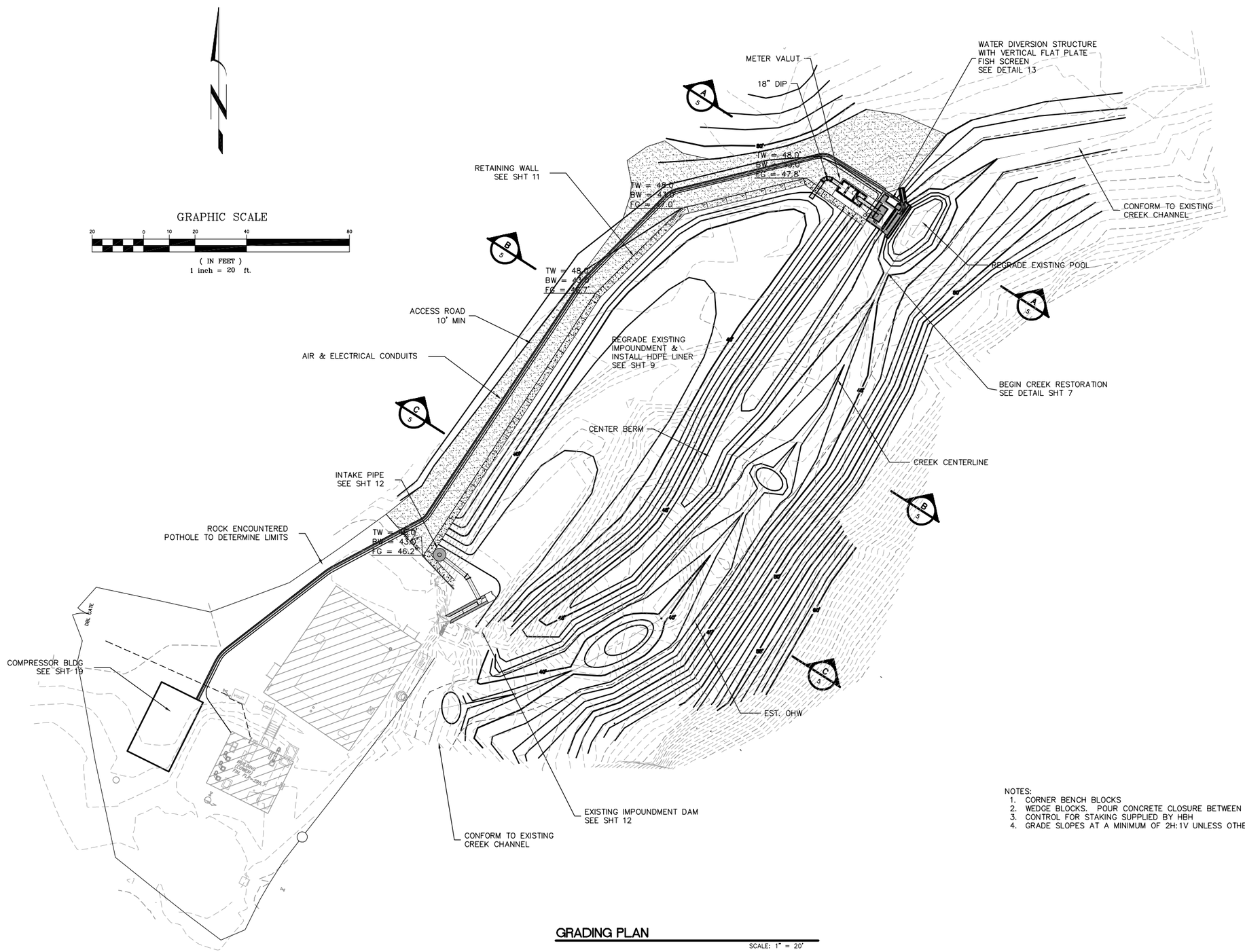

GRADING PLAN

SCALE: 1" = 20'

NOTES:
1. CORNER BENCH BLOCKS
2. WEDGE BLOCKS. POUR CONCRETE CLOSURE BETWEEN BLOCKS.
3. CONTROL FOR STAKING SUPPLIED BY HBH
4. GRADE SLOPES AT A MINIMUM OF 2H:1V UNLESS OTHERWISE NOTED

REGISTERED PROFESSIONAL ENGINEER 15458 OREGON JULY 25, 1961 DAVID K. BOATMAN
EXPIRES 12/31/2009

H B H
Consulting Engineers
20055 SW Pacific Hwy, Suite 201
Sherwood, Oregon 97140
503/625-8065 ■ fax 503/625-1531
email: mail@hbh-consulting.com

Designed By: CLL | Drawn By: CLL | Checked By: DKB | Submittal No: PRELIMINARY
File: L:\2004-027-17\DWG\GRADING | Layout: GRADING

REV.	DATE	DESCRIPTION	BY

0" 1"
IF THIS LINE IS NOT 1 INCH
SCALE IS NOT AS SHOWN

CITY OF ROCKAWAY BEACH
P.O. BOX 5, BAY CITY, OR 97136

IMPOUNDMENT IMPROVEMENTS
ROCKAWAY BEACH, OREGON

GRADING PLAN

Date: 4/14/11
Sheet No.: 4 of 13

2004-027-17

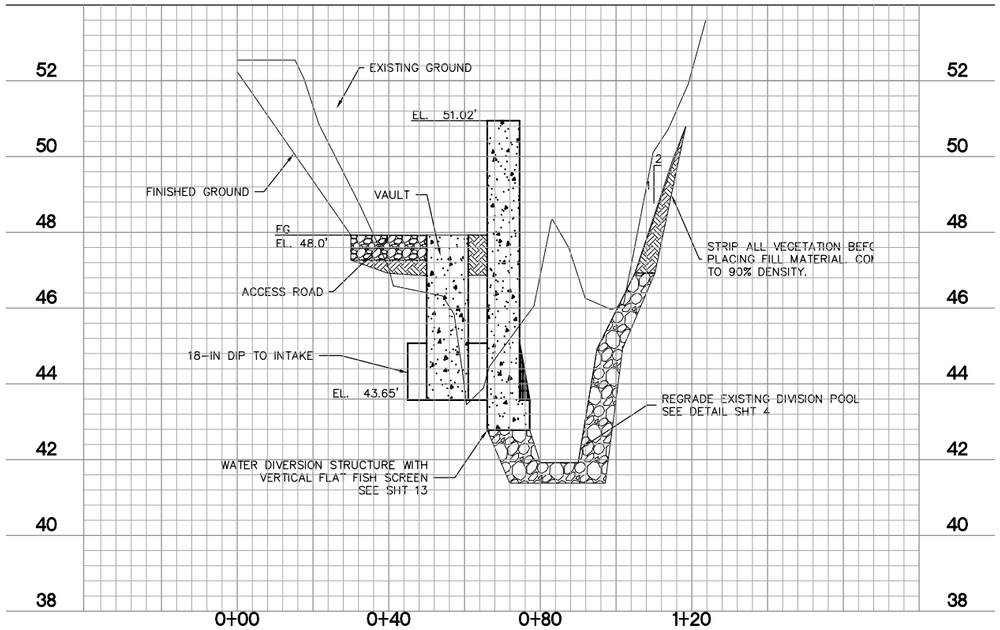

SECTION A-A

SCALE: HOR: 1" = 20'
VER: 1" = 2'

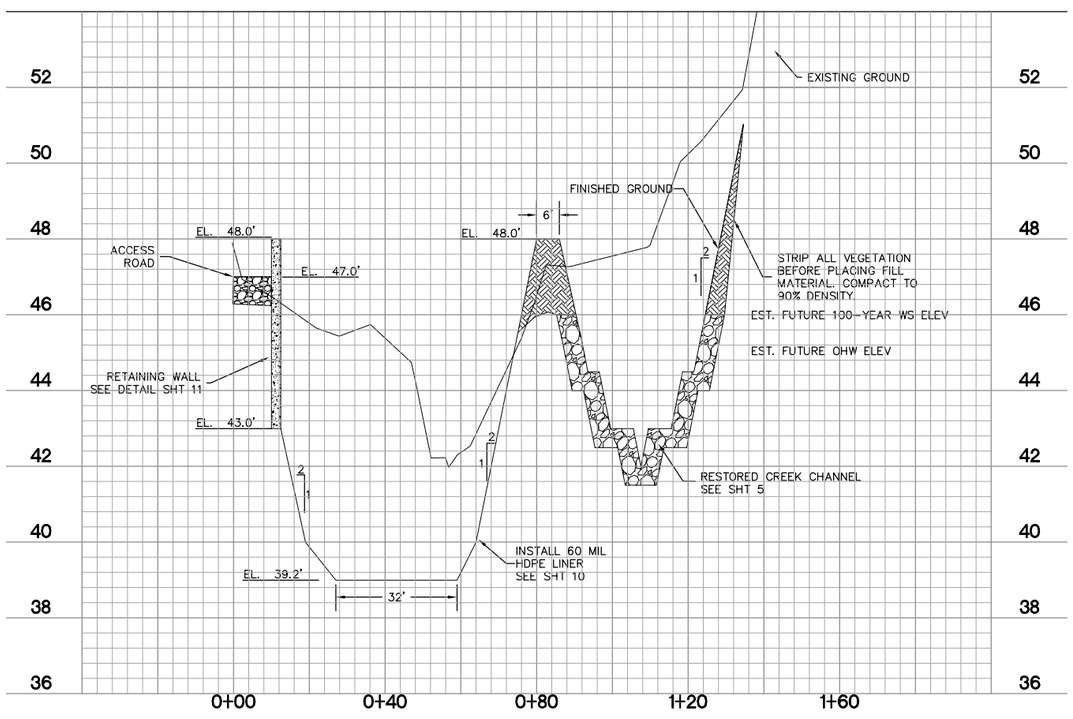

SECTION B-B

SCALE: HOR: 1" = 20'
VER: 1" = 2'

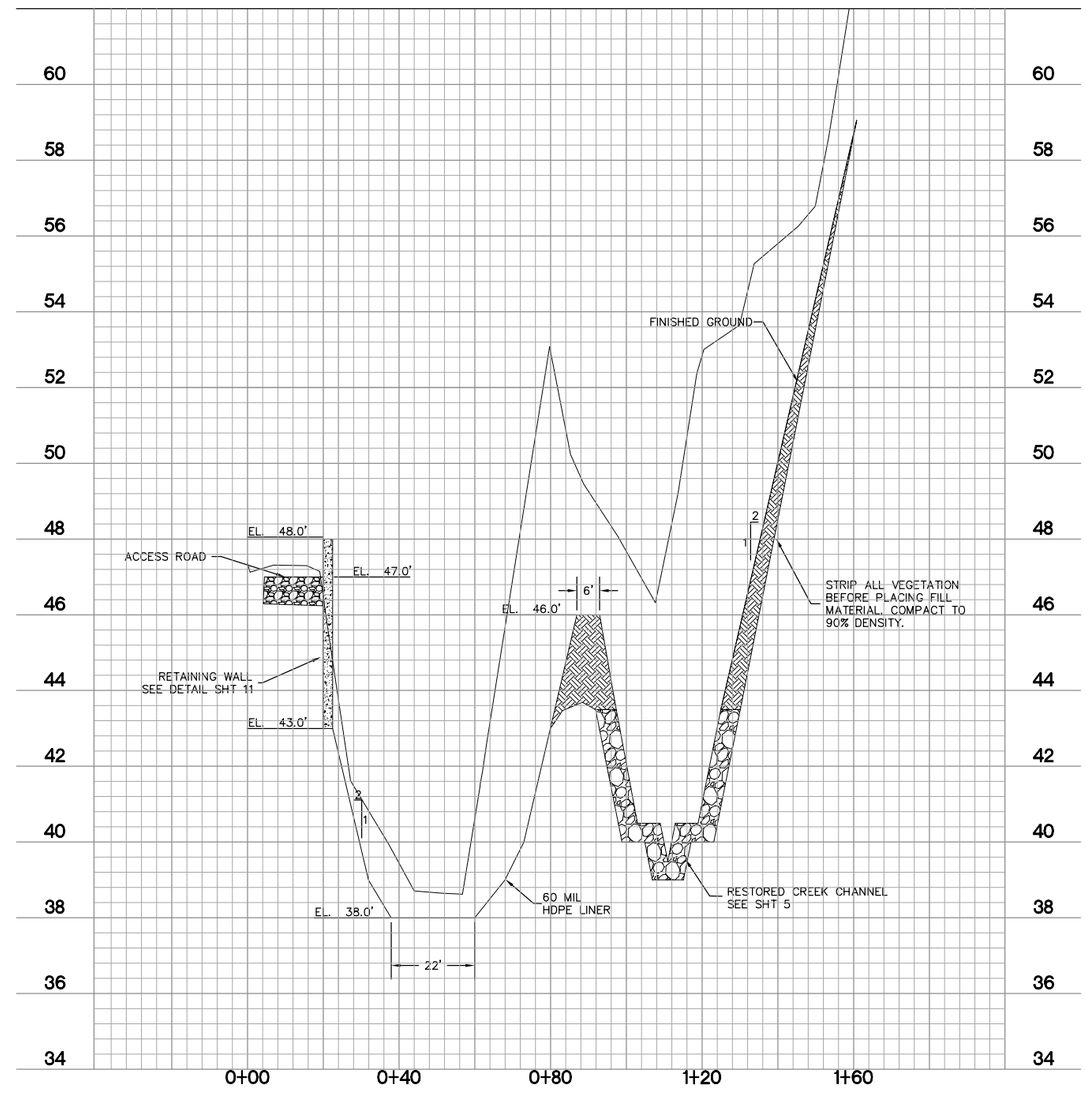

SECTION C-C

SCALE: HOR: 1" = 20'
VER: 1" = 2'

REGISTERED PROFESSIONAL ENGINEER 15458
OREGON JULY 25, 1961
DAVID K. BOATMAN
EXPIRES 12/31/2009

H B H
Consulting Engineers
20055 SW Pacific Hwy, Suite 201
Sherwood, Oregon 97140
503/625-8065 ■ fax 503/625-1531
email: mail@hbh-consulting.com

Designed By:	CLL	Drawn By:	CLL	Checked By:	DKB	Submittal No:	PRELIMINARY
File:	L:\2004-027-17\DWG\GRADING					Layout:	XSECTIONS

REV.	DATE	DESCRIPTION	BY

0" 1"
IF THIS LINE IS NOT 1 INCH
SCALE IS NOT AS SHOWN

CITY OF ROCKAWAY BEACH
P.O. BOX 5, BAY CITY, OR 97136

IMPOUNDMENT IMPROVEMENTS
ROCKAWAY BEACH, OREGON
CROSS SECTIONS

Sheet No. 5 of 22

Date 4/14/11

2004-027-17

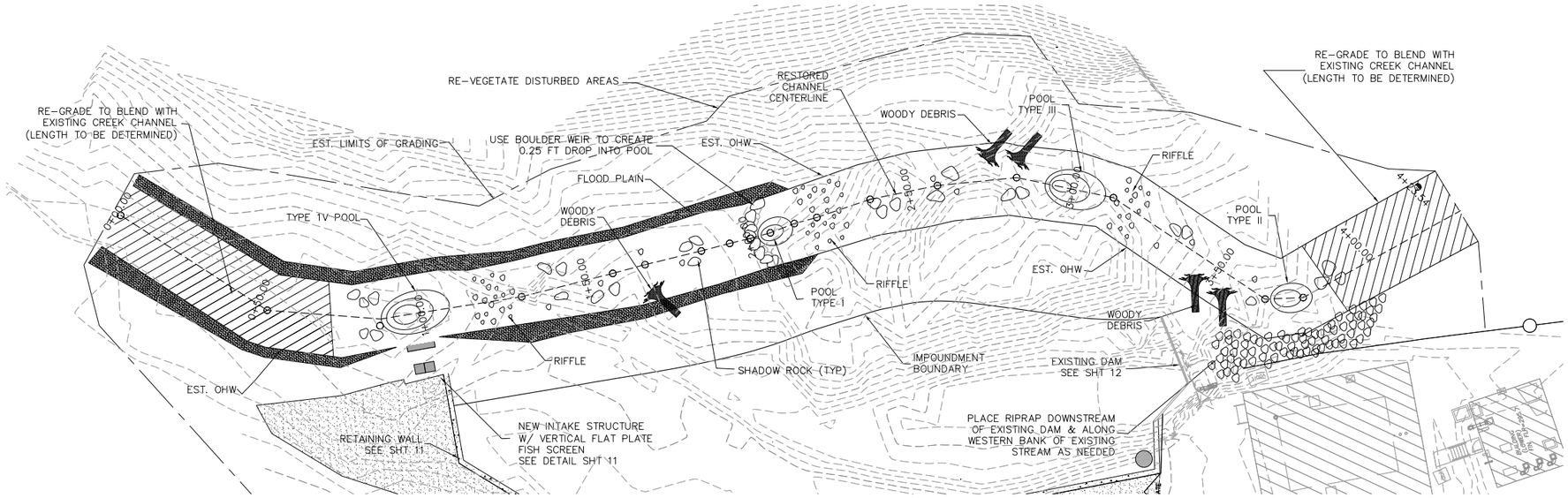

RESTORED CREEK PLAN VIEW

SCALE: HOR: 1" = 20'

GRAPHIC SCALE

20 0 10 20 40 80

(IN FEET)
1 inch = 20 ft.

NOTES:

1. ROUGHNESS ELEMENTS SHALL BE PLACED IN AN OFFSET, IRREGULAR ARRANGEMENT THAT INCREASES THE DIVERSITY OF WATER DEPTH, SUBSTRATE, AND VELOCITY, THEREBY INCREASING AVAILABLE HABITAT OF A PLANE BED STREAM. THE ROUGHNESS ELEMENTS ALSO PROVIDE VELOCITY SHADOWS AND RESTING PLACES FOR MIGRATING FISH.
2. STRIP ORGANIC MATERIAL AND SALVAGE VEGETATION ALONG SIDE CHANNEL ALIGNMENT AND STOCKPILE AT A LOCATION IDENTIFIED BY OWNER.
3. UTMOST CARE SHALL BE EMPLOYED TO ENSUE EXCAVATED MATERIALS CONSTRUCTION DO NOT ENTER CREEK OR INCREASE AMBIENT TURBIDITY LEVELS.

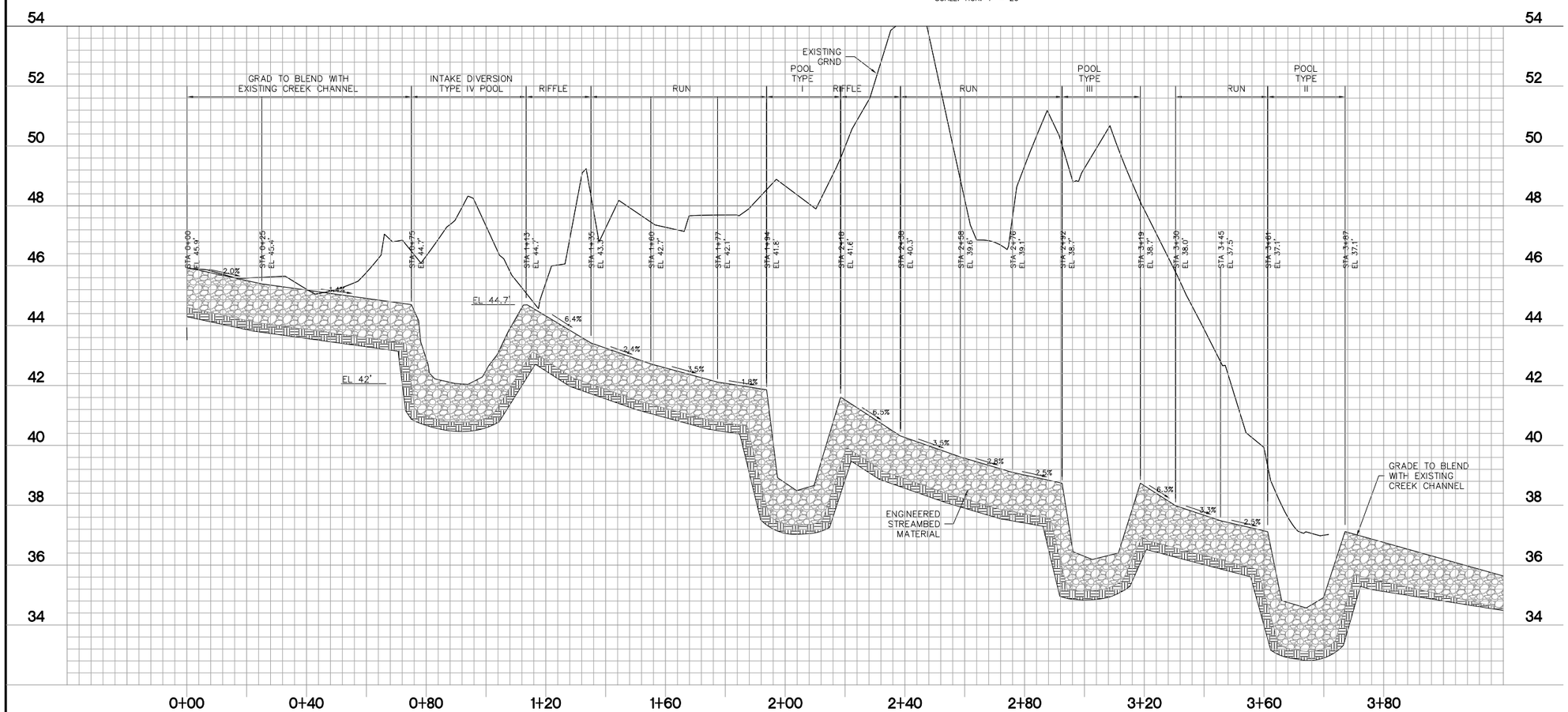

RESTORED CREEK PROFILE VIEW

SCALE: HOR: 1" = 20'
VER: 1" = 2'

REGISTERED PROFESSIONAL ENGINEER 5469
OREGON JULY 25, 1961
DAVID K. BOATMAN
EXPIRES 12/31/2016

H B H Consulting Engineers
20055 SW Pacific Hwy, Suite 201
Sherwood, Oregon 97140
503/625-8065 ■ fax 503/625-1531
email: mail@hbh-consulting.com

Designed By: CLL | Drawn By: CLL | Checked By: DKB | Submittal No: PRELIMINARY
File: L:/2004-027-17/DWG/CREEK_RESTORATION | Layout: RESTORATION

REV.	DATE	DESCRIPTION	BY
1	3/18/2015	REVISED PROFILE AND BOULDER CLUSTERS	CLL
2	6/5/2015	REVISED TO ADD MORE RIP RAP ALONG BANK BOARDING WTP	CLL

0" 1"
IF THIS LINE IS NOT 1 INCH SCALE IS NOT AS SHOWN

CITY OF ROCKAWAY BEACH
P.O. BOX 5; BAY CITY, OR 97136

IMPOUNDMENT IMPROVEMENTS
ROCKAWAY BEACH, OREGON
CREEK RESTORATION

Date: 4/14/11
Sheet No. 6 of 22
2004-027-17

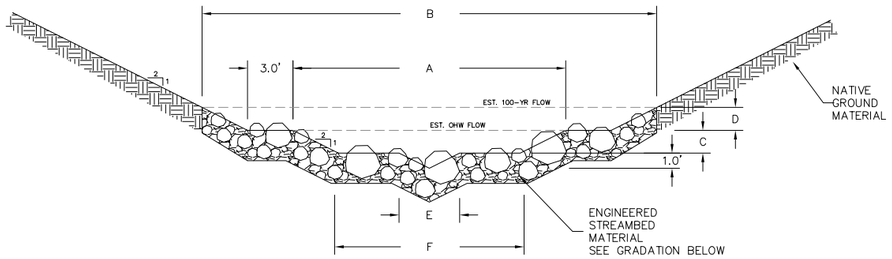

CREEK CROSS SECTION TYPE I (TYP)
STA 0+90 TO STA 2+02

SCALE: 1" = 5'

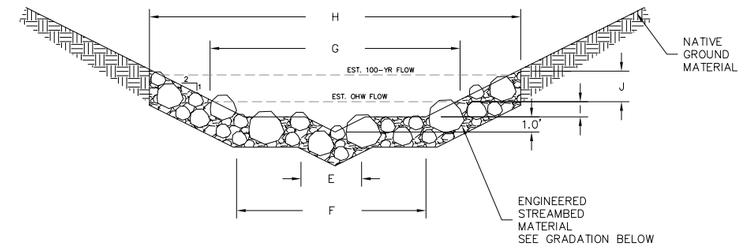

CREEK CROSS SECTION TYPE II (TYP)
STA 2+12 TO STA 3+70

SCALE: 1" = 5'

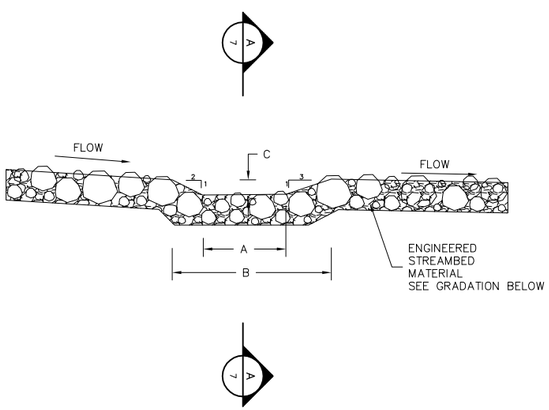

POOL PROFILE DETAIL (TYP)

SCALE: 1" = 5'

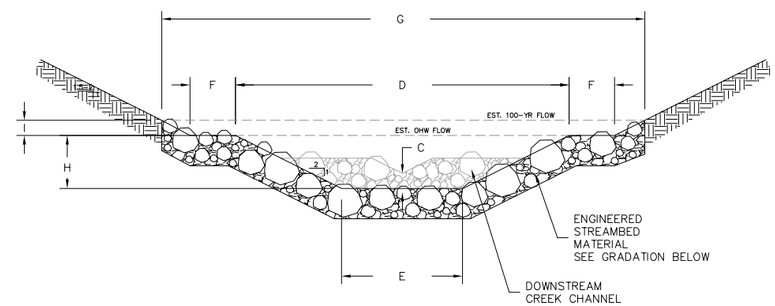

SECTION A-A

SCALE: 1" = 5'

CHANNEL BED DIMENSION TABLE										
SLOPE	A	B	C	D	E	F	G	H	I	J
2.3%					4.0 Ft	12.0 Ft	18.8 Ft	26.8 Ft	1.7 Ft	2.0 Ft
2.5%	22.0 Ft	34.0 Ft	1.5 Ft	1.5 Ft	4.0 Ft	16.0 Ft	22.0 Ft	28.0 Ft	1.5 Ft	1.5 Ft
2.8%	22.0 Ft	34.0 Ft	1.5 Ft	1.5 Ft	4.0 Ft	16.0 Ft	22.0 Ft	28.0 Ft	1.5 Ft	1.5 Ft
3.1%	22.0 Ft	34.0 Ft	1.5 Ft	1.5 Ft	4.0 Ft	16.0 Ft				
3.3%					4.0 Ft	16.0 Ft	22.0 Ft	28.0 Ft	1.5 Ft	1.5 Ft
6.3%					3.0 Ft	12.0 Ft	18.0 Ft	24.0 Ft	1.5 Ft	1.5 Ft
6.4%	20.0 Ft	30.0 Ft	1.5 Ft	1.0 Ft	3.0 Ft	14.0 Ft	20.0 Ft	24.0 Ft	1.5 Ft	1.0 Ft

POOL DIMENSION TABLE									
POOL TYPE	A	B	C	D	E	F	G	H	1
I	5.0 Ft	10.0 Ft	1.0 Ft	22.0 Ft	8.0 Ft	3.0 Ft	32.0 Ft	3.5 Ft	1.0 Ft
II	5.0 Ft	10.0 Ft	1.0 Ft	20.0 Ft	5.2 Ft	0.0 Ft	28.0 Ft	3.7 Ft	2.0 Ft
III	15.5 Ft	20.0 Ft	1.5 Ft	22.0 Ft	6.0 Ft	0.0 Ft	28.0 Ft	4.0 Ft	1.5 Ft
IV	26.5 Ft	40.0 Ft	2.7 Ft	30.0 Ft	9.2 Ft	0–5 Ft	41.0 Ft	5.2 Ft	1.5 Ft

ENGINEERED STREAMBED MATERIAL GRADATION (MM)

D100 = 200
D95 = 175
D84 = 140
D50 = 50
D30 = 18
D10 = 2
D5 = 0.5

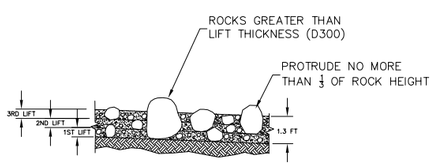

ESM PLACEMENT DETAIL

SCALE: 1" = 5'

NOTES:

1. ALL RESTORED STREAM CHANNELS LOCATED IN SPOIL SHALL BE UNDERCUT A MINIMUM OF 2 FEET AND LINED WITH AN IMPERMEABLE MATERIAL, SUCH AS MINESOIL, NATIVE SOIL, OR A NON–ACID AND NON–TOXIC SHALE UNIT. ALL MATERIAL PACED IN THIS MANNER SHALL BE PLACED IN 6 INCH LIFTS AND THOROUGHLY COMPACTED.
2. ALL RESTORED STREAM CHANNELS SHOULD BE CONSTRUCTED IN A MANNER WHICH ENSURES POSITIVE DRAINAGE FROM THE VALLEY SIDE SLOPES. A SLOPE OF ONE TO FIVE (1–5%) PERCENT TOWARD THE STREAM CHANNEL IS REQUIRED FROM VALLEY SIDE SLOPES.
3. ALL RESTORED STREAM CHANNELS LOCATED IN SPOIL SHALL BE PROTECTED ALONG THEIR ENTIRE LENGTH BY A RIP–RAP BLANKET. THIS BLANKET SHALL BE USED A S A FILTER MATERIAL TO PREVENT EROSION OF THE SPOIL MATERIAL UNDERLYING THE RESTORED STREAM CHANNEL. THE FILTER SHALL HAVE A D50 LESS THAN 0.5 FT AND A BLANKET THICKNESS OF 1.3(D50).
4. CARE SHALL BE TAKEN TO ENSURE THE D50 OF THE CHANNEL BED MATERIAL IS NEARLY EQUIVALENT TO BUT GREATER THAN THE D50 SPECIFIED ABOVE.
5. NATIVE SUBSTRATE MATERIAL DEVELOPED FROM EXCAVATION MAY BE INCORPORATED INTO GRADATION MIX SPECIFIED ABOVE. THIS MIX SHALL BE WELL–GRADED AND REPRESENTATIVE OF IN–SITU SUBSTRATE AND BED MATERIAL. CONSTRUCTED RIFFLE MATERIAL SHALL BE MIXED AND WASHED TO ENSURE THE FILLING OF VOIDS AND GOOD SEAL WITHIN THE CONSTRUCTED FEATURE PER ODFW FISH PASSAGE CRITERIA.
8. WASH EACH LIFT WITH FINES UNTIL WATER CEASES TO BE OBSERVABLE SEEPING INTO DESIGN MIX.
9. ANY SEDIMENT DEPOSITION RESULTING FROM UPSTREAM DISTURBANCES SHALL BE REMOVED FROM THE CHANNEL, PLACED IN AN UPLAND AREA, AND REVEGETATED.
10. ALL ROCK SHALL BE PLACED SO THAT LARGER ROCKS ARE UNIFORMLY DISTRIBUTED AND IN CONTACT WITH ONE ANOTHER WITH SMALLER ROCKS FILL VOIDS. NO END DUMPING OF ROCK WILL BE ALLOWED.
6. TO LIMIT THEIR HYDRAULIC INFLUENCE, BOULDERS SHOULD NOT BE ALLOWED TO BLOCK A SIGNIFICANT PORTION OF THE CHANNEL CROSS–SECTION AND SHOULD BE KEPT RELATIVELY LOW IN THE CHANNEL PROFILE.
10. ROCK FOR MATRIX AND ROUGHNESS ELEMENTS SHOULD BE SOUND, DENSE AND FREE FROM CRACKS, SEAMS, AND OTHER DEFECTS.

REGISTERED PROFESSIONAL ENGINEER 5465 OREGON JULY 25, 1981 DAVID K. BOATMAN
EXPIRES 12/31/2011

H B H
Consulting Engineers
20055 SW Pacific Hwy, Suite 201
Sherwood, Oregon 97140
503/625-8065 ■ fax 503/625-1531
email: mail@hbh-consulting.com

Designed By: CLL | Drawn By: CLL | Checked By: DKB | Submittal No: PRELIMINARY
File: L:/2004-027-17/DWG/CREEK_RESTORATION | Layout: RESTORATION

REV.	DATE	DESCRIPTION	BY
			XXX
			XXX
			XXX
			XXX
			XXX
			XXX
			XXX

0" 1"
IF THIS LINE IS NOT 1 INCH SCALE IS NOT AS SHOWN

CITY OF ROCKAWAY BEACH
P.O. BOX 5, BAY CITY, OR 97156

IMPOUNDMENT IMPROVEMENTS
ROCKAWAY BEACH, OREGON

CREEK DETAILS

Sheet No. 7 of 22
Date 4/14/11
2004-027-17

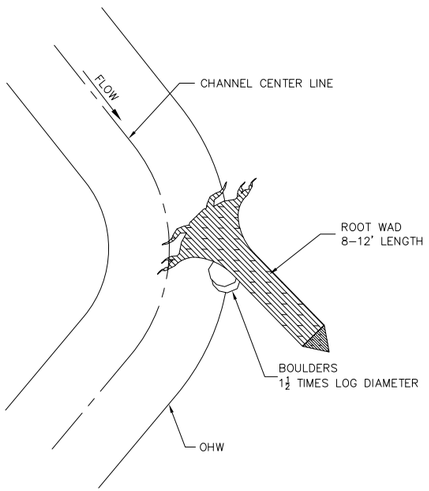

PLAN VIEW
DRIVE POINT METHOD

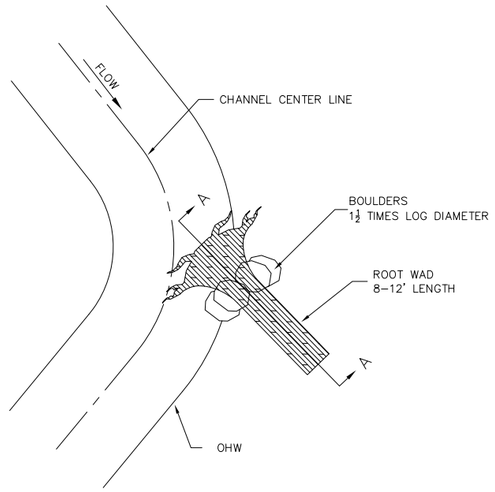

PLAN VIEW
TRENCHING METHOD

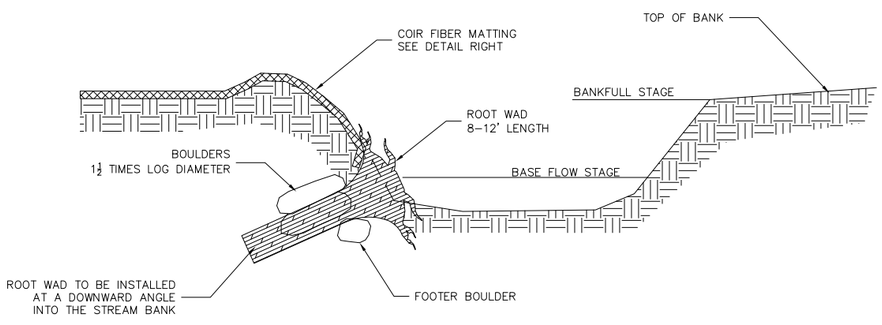

SECTION A–A

ROOT WAD DETAILS

N.T.S.

NOTES:

1. TREE USED FOR ROOT WAD SHALL BE 1½ TIMES BANKFULL WIDTH AND A MINIMUM DIAMETER OF 18" AS MEASURED THREE FEET FROM THE ROOT WAD UNLESS OTHERWISE NOTED.
2. THE ROOT FAN SHALL BE A MINIMUM 5' IN DIAMETER. THE TRUNK SHALL BE TRIMMED OF LIMBS OR BRANCHES. LOPPING SHALL BE PERFORMED SQUARE ACROSS THE TRUNK TREE SHALL BE OF SOUND WOOD AND FREE OF DECAY, BREAKAGE, OR OTHER DAMAGE.
3. ORIENT ROOT WAD SO THAT THE STREAM FLOW MEETS THE ROOT WAD STRAIGHT ON, DEFLECTING THE WATER AWAY FROM THE BANK.
4. FOR DRIVE POINT METHOD INSTALLATION SHARPEN THE END OF THE LOG BEFORE "DRIVING" AT A DOWNWARD ANGLE INTO THE BANK. BOULDER SHOULD BE PLACED ON EACH SIDE OF THE ROOT WAD TO PIN IT IN PLACE. ONE THIRD OF THE ROOT WAD SHOULD REMAIN BELOW NORMAL BASE FLOW CONDITIONS
5. IF THE ROOT WAD CANNOT BE DRIVEN INTO THE BANK OR THE BANK NEEDS TO BE RECONSTRUCTED, THE TRENCHING METHOD SHOULD BE USED. THIS METHOD REQUIRES THAT A TRENCH BE EXCAVATED FOR THE LOG PORTION OF THE ROOT WAD. IN THIS CASE, FOOTER BOULDERS SHOULD BE INSTALLED UNDERNEATH THE ROOT WAD IN A TRENCH EXCAVATED PARALLEL TO THE BANK AND WELL BELOW THE STREAM BED. BOULDERS SHOULD BE PLACED ON EACH SIDE OF THE ROOT WAD TO PIN IT IN PLACE. ONE–THIRD OF THE ROOT WAD SHOULD REMAIN BELOW NORMAL BASE FLOW CONDITIONS.

NOTES:

1. CUT LIVE CUTTINGS IN 20"–36" LENGTHS FROM ¾"–2" DIAMETER STOCK WITHIN 20 MILES OF SITE.
2. PERFORM CUTTING AND INSTALLATION WITHIN 24 HOURS.
3. KEEP CUTTINGS COOL AND MOIST PRIOR TO INSTALLATION
4. OFFSET CUTTINGS 3FT FROM CENTER IN TRIANGLE PLANTINGS.

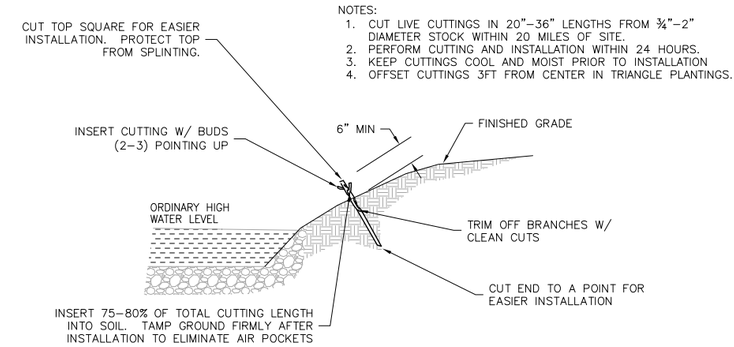

PLANT STAKING DETAIL

N.T.S.

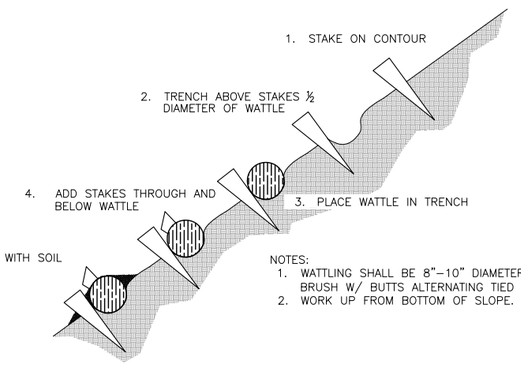

NOTES:

1. WATTLING SHALL BE 8"–10" DIAMETER BUNDLES OF LIVE BRUSH W/ BUTTS ALTERNATING TIED 12"–16" O.C.
2. WORK UP FROM BOTTOM OF SLOPE.

CONTOUR WATTLING INSTALLATION

N.T.S.

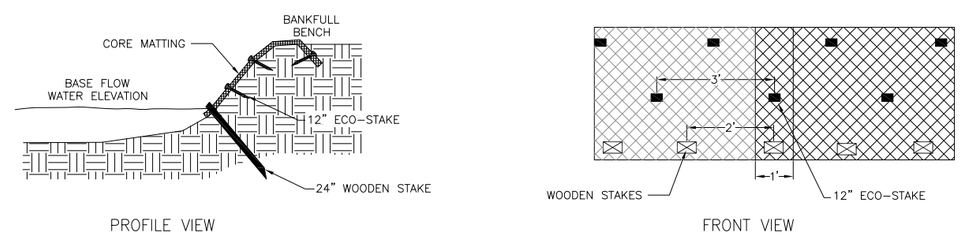

PROFILE VIEW

FRONT VIEW

COIR MATTING DETAILS

N.T.S.

NOTES:

1. TRENCH TOP OF MATTING TO A MINIMUM DEPTH OF 6 INCHES. STAKE OR STAPLE IN PLACE AND BACKFILL TO DESIGN GRADE.
2. INSTALL 24" WOODEN STAKES ALONG TOE OF MATTING (INTERCEPT BETWEEN WATER SURFACE AND BANK). WOODEN STAKES SHOULD BE PLACED AT A MAXIMUM SPACING OF 2' AT CENTER.
3. AT JOINTS PROVIDE A MINIMUM 1' OVERLAP OF COIR MATTING SECTIONS.
4. INSTALL 12" ECO–STKES OR 12" STAPLES IN BANK FLUSH WITH COIR MATTING. ECO–STAKES OR STABLES SHALL BE SPACED A MAXIMUM 3' AT CENTERS.

REGISTERED PROFESSIONAL ENGINEER 15455
OREGON JULY 25, 1981
DAVID K. BOATMAN
EXPIRES 12/31/2015

H B H Consulting Engineers
20055 SW Pacific Hwy, Suite 201
Sherwood, Oregon 97140
503/625-8065 ■ fax 503/625-1531
email: mail@hbh-consulting.com

Designed By: CLL | Drawn By: CLL | Checked By: DKB | Submittal No: PRELIMINARY
File: L:/2004-27-17/DWG/Creek Restoration | Layout: LAYOUT1

REV.	DATE	DESCRIPTION	BY
1	6/5/2015	DELETED RIP RAP FROM PLANING DTL. ADDED WATTLING DTL.	CLL

0" 1"
IF THIS LINE IS NOT 1 INCH
SCALE IS NOT AS SHOWN

CITY OF ROCKAWAY BEACH
P.O. BOX 5; BAY CITY, OR 97136

IMPOUNDMENT IMPROVEMENTS
ROCKAWAY BEACH, OREGON

CREEK DETAILS

Sheet No. 8
Date 4/14/11
8 OF 22
2004-27-17

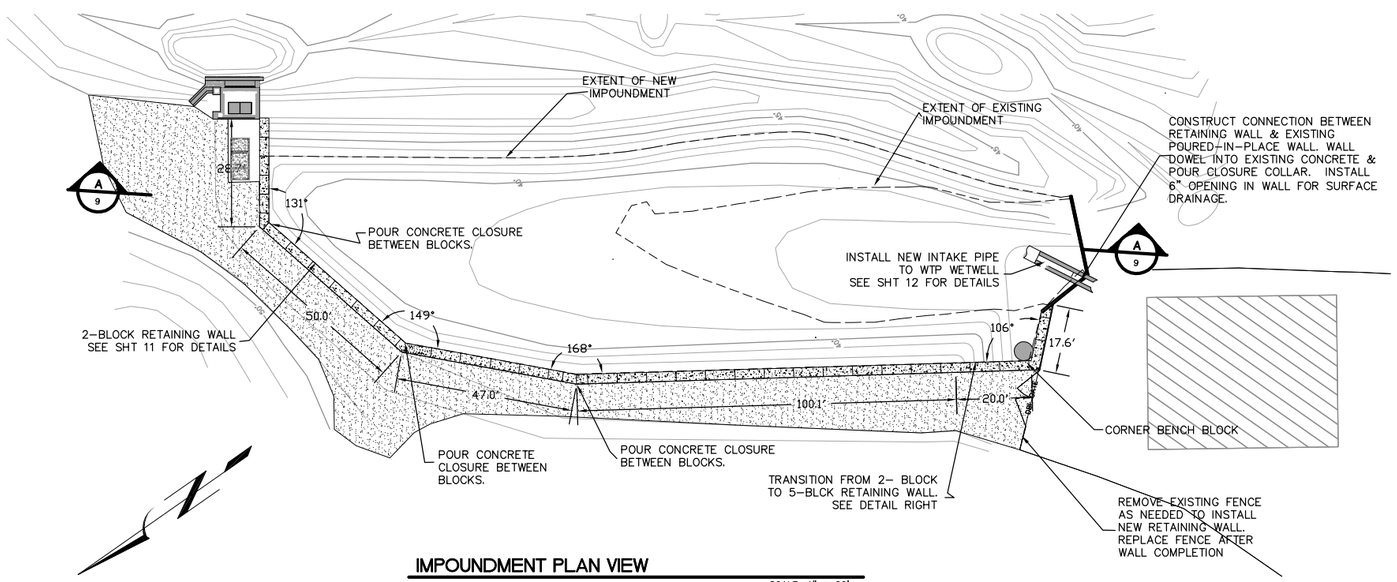

IMPOUNDMENT PLAN VIEW

SCALE: 1" = 20'

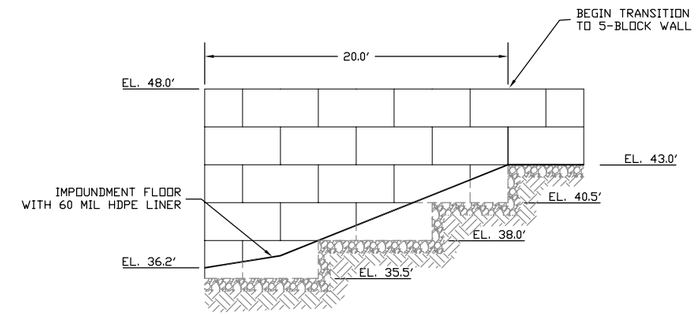

WALL TRANSITION DETAIL

SCALE: 1" = 5'

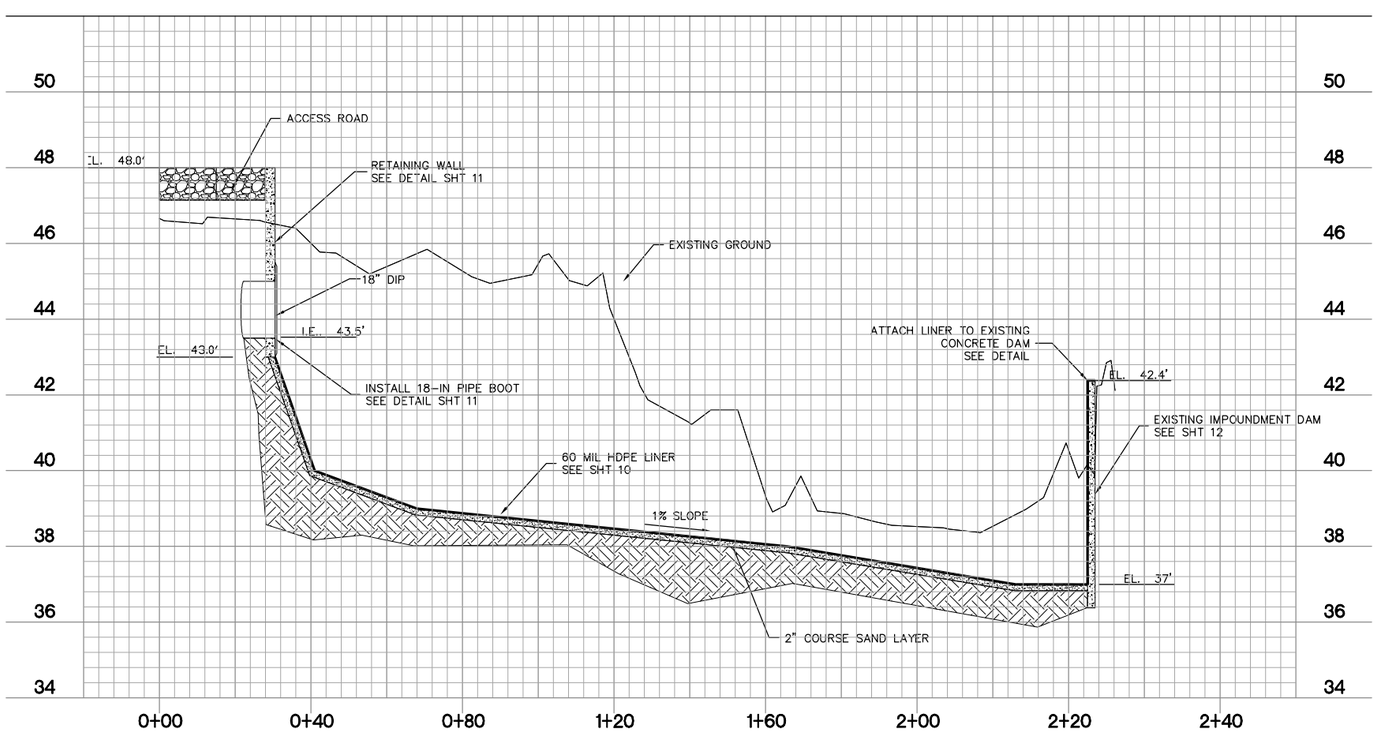

SECTION A-A IMPOUNDMENT PROFILE

SCALE: HOR: 1" = 20'
VER: 1" = 2"

REGISTERED PROFESSIONAL ENGINEER 5463
OREGON JULY 25, 1961
DAVID K. BOATMAN
EXPIRES 12/31/2011

H B H
Consulting Engineers
20055 SW Pacific Hwy, Suite 201
Sherwood, Oregon 97140
503/625-8065 ■ fax 503/625-1531
email: mail@hbh-consulting.com

Designed By: CLL | Drawn By: CLL | Checked By: DKB | Submittal No: PRELIMINARY
File: L:/2004-027-17/DWG/IMPOUNDMENT | Layout: IMPOUNDMENT

REV.	DATE	DESCRIPTION	BY

0" 1"
IF THIS LINE IS NOT 1 INCH SCALE IS NOT AS SHOWN

CITY OF ROCKAWAY BEACH
P.O. BOX 5; BAY CITY, OR 97136

IMPOUNDMENT IMPROVEMENTS
ROCKAWAY BEACH, OREGON

IMPOUNDMENT

Sheet No. 9 | 9 OF 22
Date 4/14/11
2004-027-17

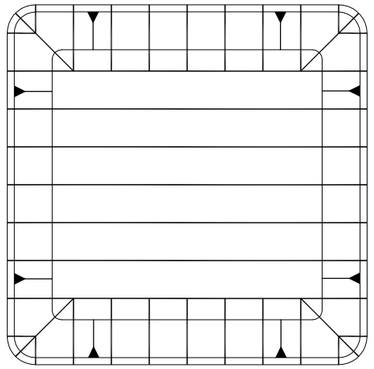

LEGEND
— WELDED SEAMS
— DIRECTION OF SLOPE

TYPICAL PLAN VIEW

N.T.S.

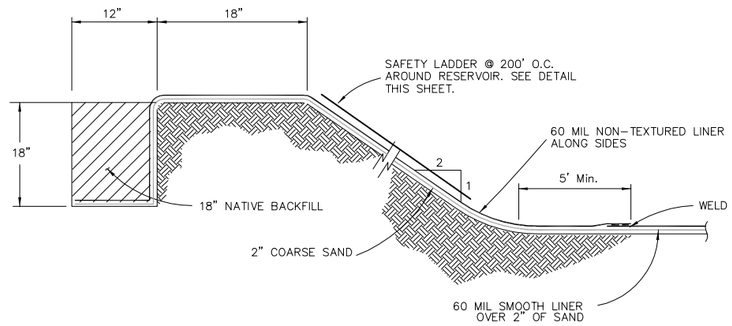

STANDARD ANCHOR TRENCH / HDPE LADDER

N.T.S.

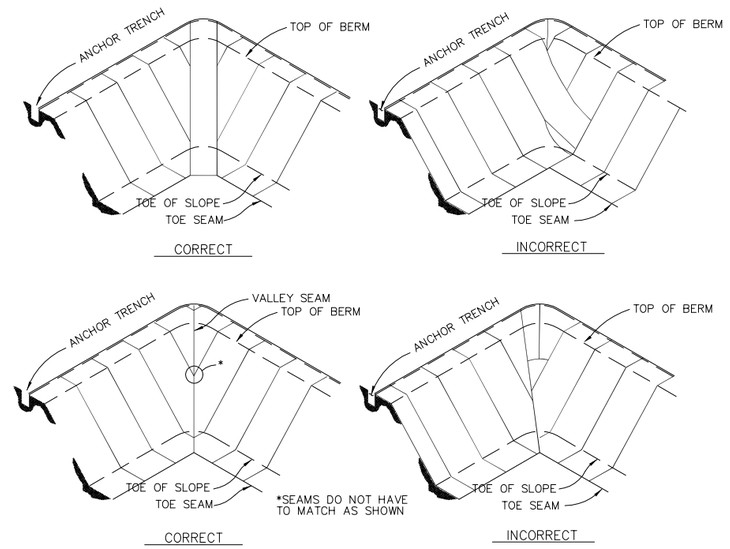

LINER TREATMENT AT CORNERS

N.T.S.

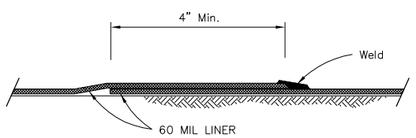

Typical Fillet Extrusion Weld

Not to scale

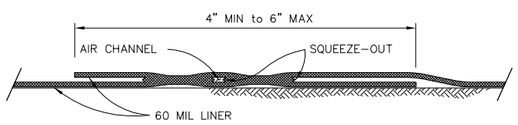

TYPICAL HOT WEDGE DOUBLE TRACK FUSION WELD

N.T.S.

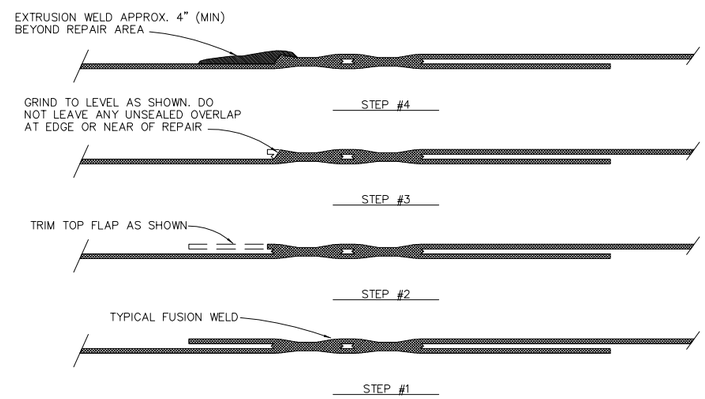

SEAM PREPARATION FOR EXTRUSION WELD

N.T.S.

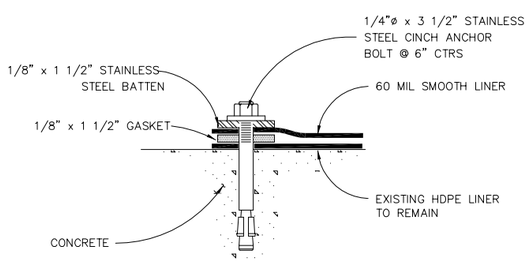

CONCRETE ANCHOR DETAIL

N.T.S.

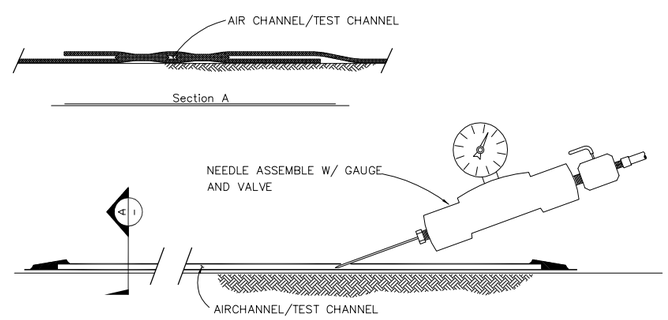

TYPICAL AIR TEST

N.T.S.

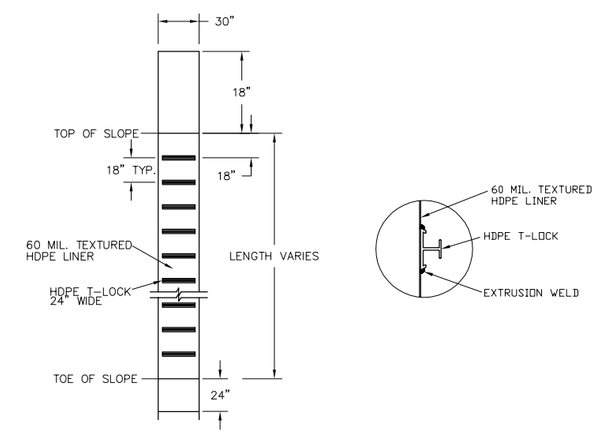

HDPE SAFETY LADDER

N.T.S.

REGISTERED PROFESSIONAL ENGINEER 5463
OREGON JULY 25, 1981
DAVID K. BOATMAN
EXPIRES 12/31/2011

H B H Consulting Engineers
20055 SW Pacific Hwy, Suite 201
Sherwood, Oregon 97140
503/625-8065 ■ fax 503/625-1531
email: mail@hbh-consulting.com

Designed By: CLL | Drawn By: CLL | Checked By: DKB | Submittal No: PRELIMINARY
File: L:/2004-027-17/DWG/IMPOUNDMENT | Layout: LINER

REV.	DATE	DESCRIPTION	BY

0" 1"
IF THIS LINE IS NOT 1 INCH SCALE IS NOT AS SHOWN

CITY OF ROCKAWAY BEACH
P.O. BOX 5, BAY CITY, OR 97136

IMPOUNDMENT IMPROVEMENTS
ROCKAWAY BEACH, OREGON

LINER DETAILS

Date: 4/14/11
Sheet No. 10 of 22

2004-027-17

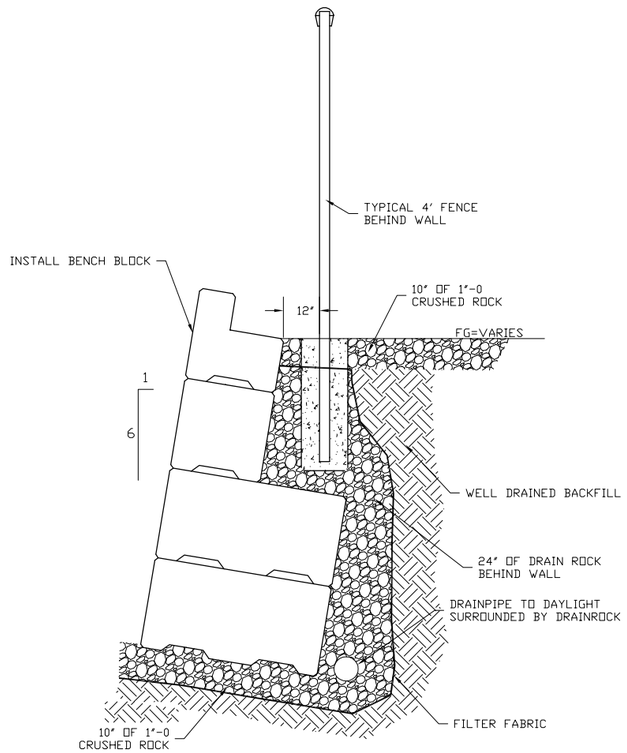

TYPICAL SECTION - 4 BLOCKS OR MORE

N.T.S.

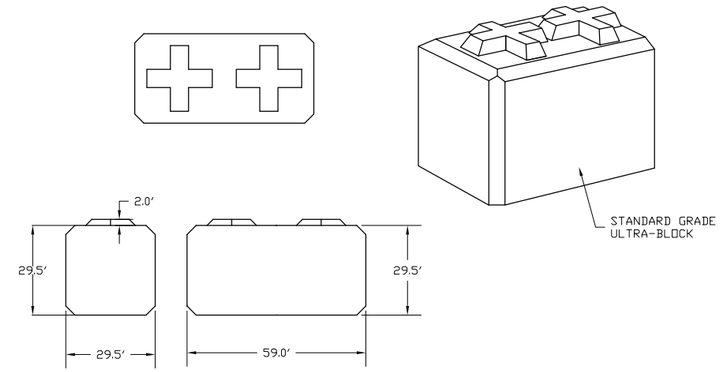

STANDARD BLOCK

N.T.S.

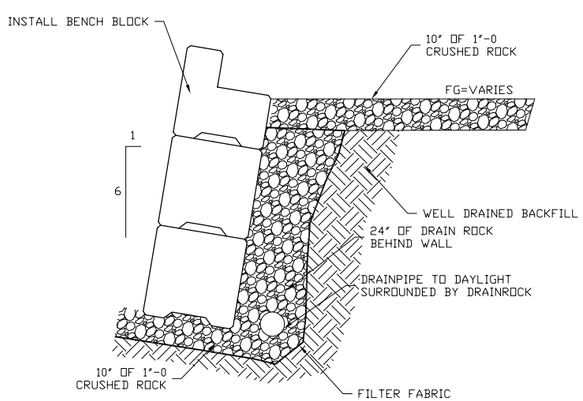

TYPICAL SECTION - 3 BLOCKS OR LESS

N.T.S.

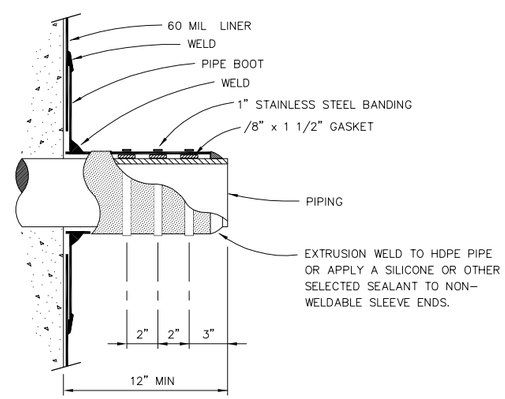

TYPICAL PENETRATION THRU CONCRETE

N.T.S.

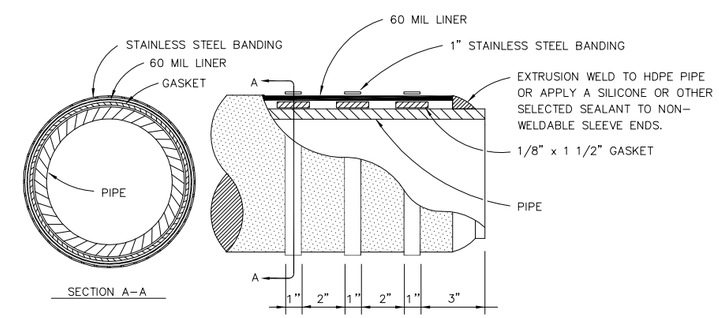

PIPE PENETRATION SEAL

N.T.S.

NOTES:
1. CONTRACTOR TO PROVIDE DESIGN SUBMITTAL FOR USE OF APPROVED EQUAL GABION RETAINING WALL. SEE GRAVITY RETAINING WALL SPEC SECTION 02831.

REGISTERED PROFESSIONAL ENGINEER 5463 OREGON JULY 25, 1961 DAVID K. BOATMAN
EXPIRES 12/31/2011

H B H
Consulting Engineers
20055 SW Pacific Hwy, Suite 201
Sherwood, Oregon 97140
503/625-8065 ■ fax 503/625-1531
email: mail@hbh-consulting.com

Designed By: CLL | Drawn By: CLL | Checked By: DKB | Submittal No: PRELIMINARY
File: L:\2004-027-17\DWG\IMPOUNDMENT | Layout: LINER

REV.	DATE	DESCRIPTION	BY
			XXX
			XXX
			XXX
			XXX
			XXX
			XXX
			XXX

0" 1"
IF THIS LINE IS NOT 1 INCH SCALE IS NOT AS SHOWN

CITY OF ROCKAWAY BEACH
P.O. BOX 5; BAY CITY, OR 97136

IMPOUNDMENT IMPROVEMENTS
ROCKAWAY BEACH, OREGON

WALL DETAILS

Sheet No. 11 of 22
Date 4/14/11
2004-027-17

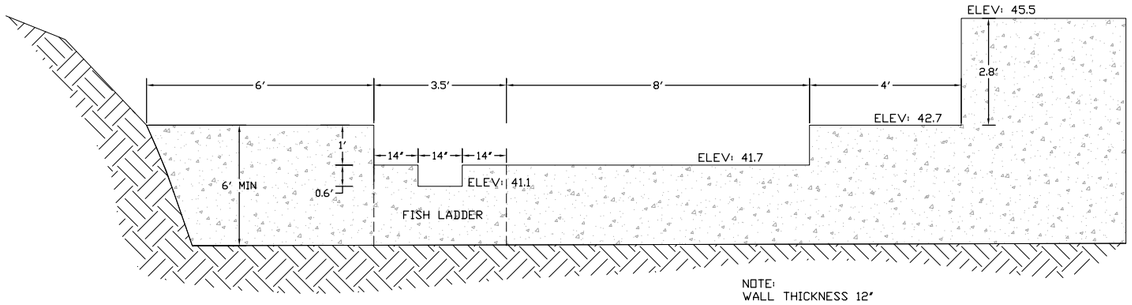

EXISTING DAM SECTION VIEW (LOOKING DOWNSTREAM)

SCALE: 1" = 2'

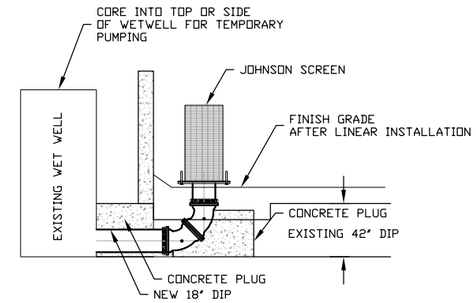

WET WELL SCREEN

SCALE: NTS

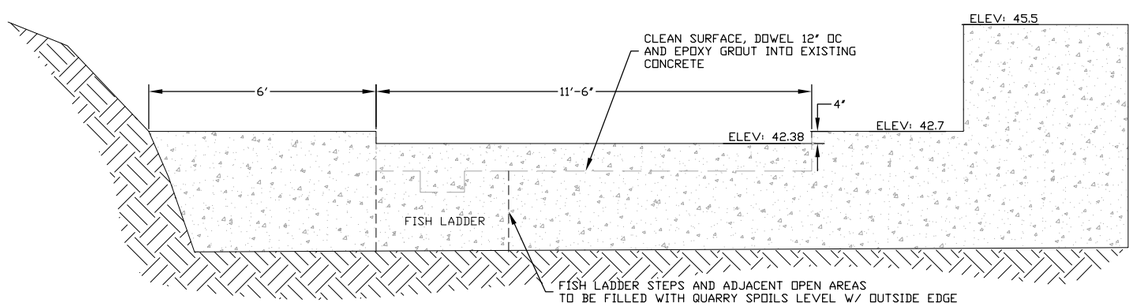

NEW DAM SECTION VIEW (LOOKING DOWNSTREAM)

SCALE: 1" = 2'

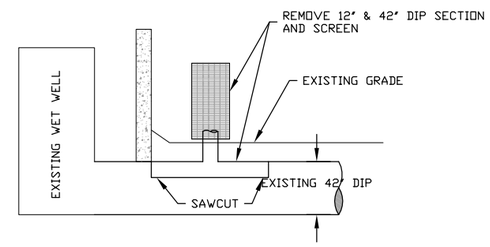

DEMO PLAN

SCALE: NTS

NOTE:

1. EXISTING 42" HEADER MANIFOLD INFILTRATION GALLERY EXISTS UNDER THE IMPOUNDMENT AREA. THE PIPE WILL BE CUT FLUSH AT THE CONCRETE WALL AND A 18" C900 PVC PIPE PLACED INSIDE THE EXISTING PIPE. THE EXCESS SPACE IS TO BE FILLED WITH HIGH EARLY CONCRETE (SEE DETAIL BELOW). SHUTDOWN TIME TO COMPLETE THIS WORK CANNOT EXCEED 1 CALENDAR DAY (24HRS). THIS 24HR SHUTDOWN DOES NOT INCLUDE THE INSTALLATION OF THE ADDITIONAL PIPING LINER AND PIPE BOOT. THE TEMPORARY PIPE CONNECTION FOR THE BYPASS SHOULD BE IN PLACE PRIOR TO SHUTDOWN. A PUMP WILL BE REQUIRED TO EMPTY IMPOUNDMENT AREA. SEDIMENT CONTROL MUST BE IN PLACE DOWNSTREAM OF THE PUMP DISCHARGE.

REGISTERED PROFESSIONAL ENGINEER 15435
OREGON JULY 25, 1961
DAVID K. BOATMAN
EXPIRES 12/31/2011

H B H
Consulting Engineers
20055 SW Pacific Hwy, Suite 201
Sherwood, Oregon 97140
503/625-8065 ■ fax 503/625-1531
email: mail@hbh-consulting.com

Designed By: BEC | Drawn By: BEC | Checked By: DKB | Submittal No: PRELIMINARY
File: L:\2004-27-17\DWG\Impoundment | Layout: LAYOUT1

REV.	DATE	DESCRIPTION	BY

0" 1"
IF THIS LINE IS NOT 1 INCH
SCALE IS NOT AS SHOWN

CITY OF ROCKAWAY BEACH
P.O. BOX 5, BAY CITY, OR 97136

IMPOUNDMENT IMPROVEMENTS
ROCKAWAY BEACH, OREGON
DAM IMPROVEMENTS

Date: 4/14/11
Sheet No. 12 OF 22
2004-27-17

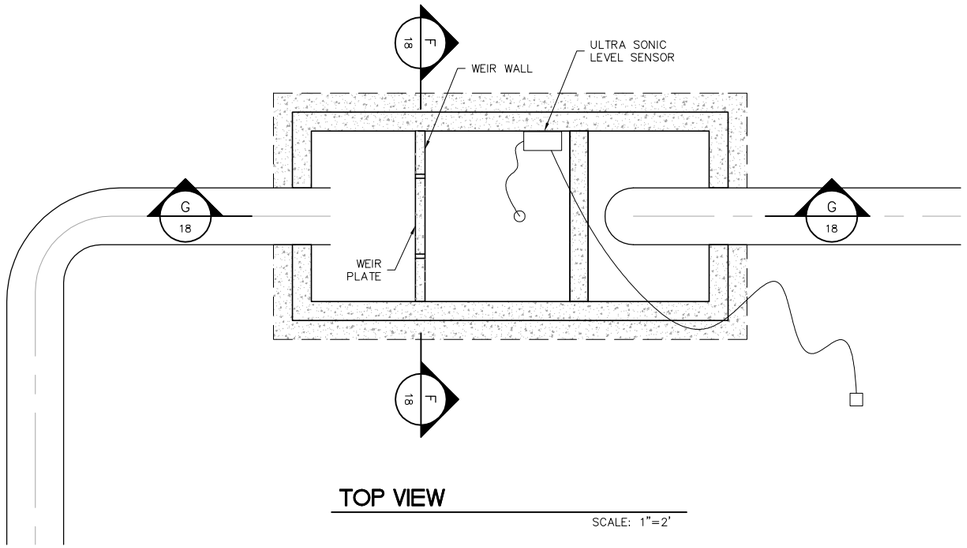

TOP VIEW

SCALE: 1"=2'

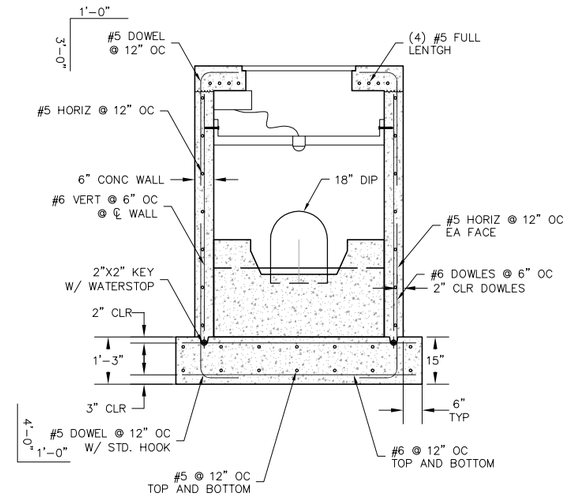

SECTION F-F

SCALE: 1" = 2'

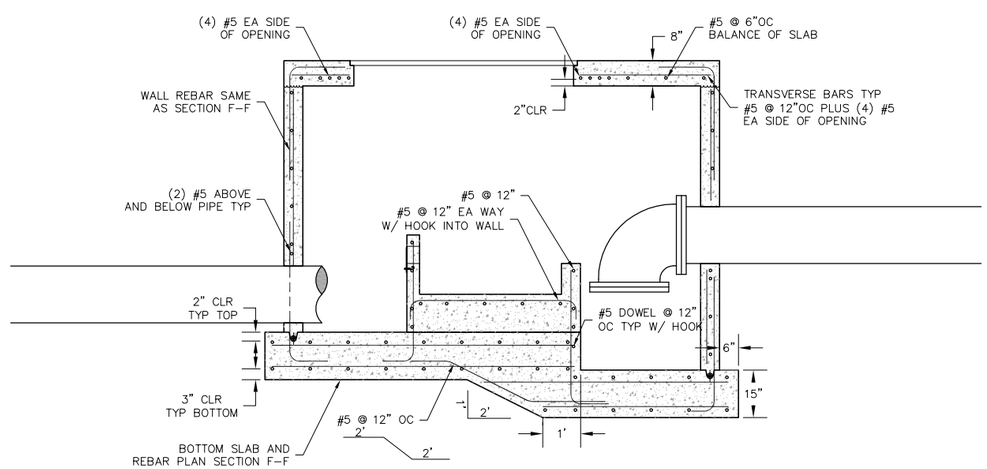

SECTION G-G

SCALE: 1" = 2'

REGISTERED PROFESSIONAL ENGINEER 5459
OREGON JULY 25, 1961
DAVID K. BOATMAN
EXPIRES 12/31/2011

H B H
Consulting Engineers
20055 SW Pacific Hwy, Suite 201
Sherwood, Oregon 97140
503/625-8065 ■ fax 503/625-1531
email: mail@hbh-consulting.com

Submittal No:	PRELIMINARY
Layout:	SCREEN
Checked By:	
Drawn By:	
Designed By:	
File:	L:\2004-27-17\DWG\INTAKE STRUCTURE

REV.	DATE	DESCRIPTION	BY

0" 1"
IF THIS LINE IS NOT 1 INCH
SCALE IS NOT AS SHOWN

CITY OF ROCKAWAY BEACH
P.O. BOX 5, BAY CITY, OR 97136

IMPOUNDMENT IMPROVEMENTS
ROCKAWAY BEACH, OREGON

FLOW CONTROL STRUCTURE REBAR PLAN

Sheet No. 18 of 22

Date 4/14/11

2004-24-17

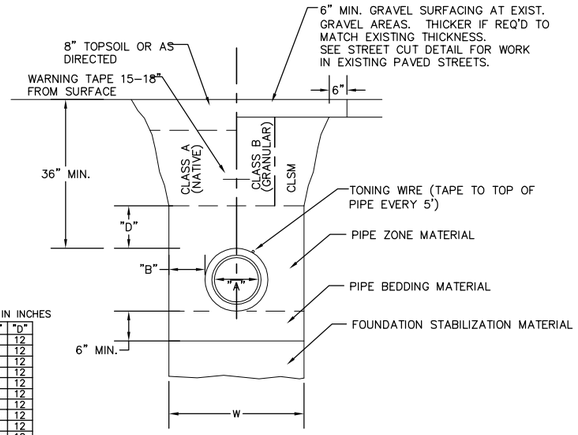

DIMENSIONS IN INCHES

"A"	"B"	"D"
4	10	12
6	10	12
8	10	12
10	10	12
12	12	12
14	12	12
16	16	12
18	16	12
24	18	12
30	18	12
36	24	14

NOTES:

1. TRENCH EXCAVATION SHALL BE CONDUCTED IN A SAFE MANNER WITH ALL NECESSARY BRACING AND SHORING PROVIDED FOR COMPLIANCE WITH OSHA.

2. FOUNDATION STABILIZATION SHALL BE PROVIDED WHEN MATERIAL AT BOTTOM OF TRENCH IS UNSUITABLE IN THE OPINION OF THE CITY TO PROVIDE A STABLE TRENCH BASE.

3. CONSTRUCTION IN PUBLIC RIGHT–OF–WAY SHALL MEET THE REQUIREMENTS OF THE AGENCY WITH JURISDICTION OVER THAT RIGHT–OF–WAY.

4. CLASS B BACKFILL REQUIRED IN ALL ROADWAYS AND TRAFFIC PATHS EXCEPT WHERE CLSM BACKFILL IS REQUIRED BY CITY, COUNTY, OR ODOT, AS APPLICABLE.

5. TONING WIRE REQUIRED AT ALL NON–METALLIC PIPELINES. WIRE SHALL BE 12 GA. MINIMUM SOLID COPPER WIRE WITH BLUE 30 MIL THICK HDPE INSULATION RATED FOR DIRECT BURY. USE APPROVED WATERPROOF SPLICE AT ALL CONNECTIONS.

6. WARNING TAPE SHALL BE 6" WIDE, 4 MIL THICK, APWA BLUE, READING "CAUTION WATER LINE BURIED BELOW".

7. MATERIALS SHALL BE AS SPECIFIED BY THE CITY IN THE STANDARDS MANUAL.

8. COMPACT ALL FILL TO 95% MDD PER ASTM D698. SUFFICIENT COMPACTION TESTS WILL BE REQUIRED TO PROVE METHODS AND COMPACTION EFFORT IS SUFFICIENT.

TRENCH DETAIL

N.T.S.

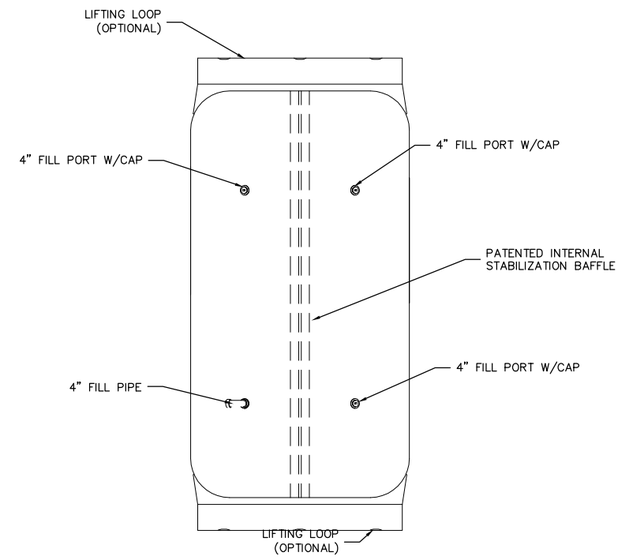

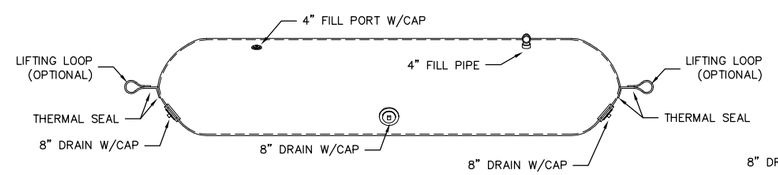

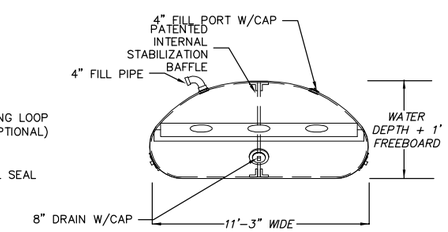

WATER INFLATED DAM (AQUA-BARRIER)

N.T.S.

REGISTERED PROFESSIONAL ENGINEER 5423 OREGON JULY 25, 1981 DAVID K. BOATMAN
EXPIRES 12/31/2011

H B H
Consulting Engineers
20055 SW Pacific Hwy, Suite 201
Sherwood, Oregon 97140
503/625-8065 ■ fax 503/625-1531
email: mail@hbh-consulting.com

Designed By: CLL | Drawn By: CLL | Checked By: DKB | Submittal No: PRELIMINARY
File: L:/2004-027-17/DWG/DETAILS | Layout: DETAILS1

REV.	DATE	DESCRIPTION	BY

0" 1"
IF THIS LINE IS NOT 1 INCH SCALE IS NOT AS SHOWN

CITY OF ROCKAWAY BEACH
P.O. BOX 5, BAY CITY, OR 97136

IMPOUNDMENT IMPROVEMENTS
ROCKAWAY BEACH, OREGON

MISCELLANEOUS DETAILS

Sheet No. 21 | 21 of 22
Date 4/14/11
2004-027-17

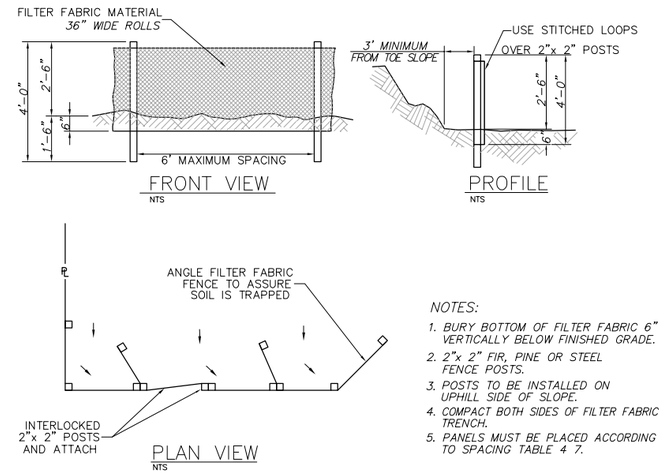

NOTES:

1. BURY BOTTOM OF FILTER FABRIC 6" VERTICALLY BELOW FINISHED GRADE.
2. 2"x 2" FIR, PINE OR STEEL FENCE POSTS.
3. POSTS TO BE INSTALLED ON UPHILL SIDE OF SLOPE.
4. COMPACT BOTH SIDES OF FILTER FABRIC TRENCH.
5. PANELS MUST BE PLACED ACCORDING TO SPACING TABLE 4 7.

SEDIMENT FENCE

N.T.S.

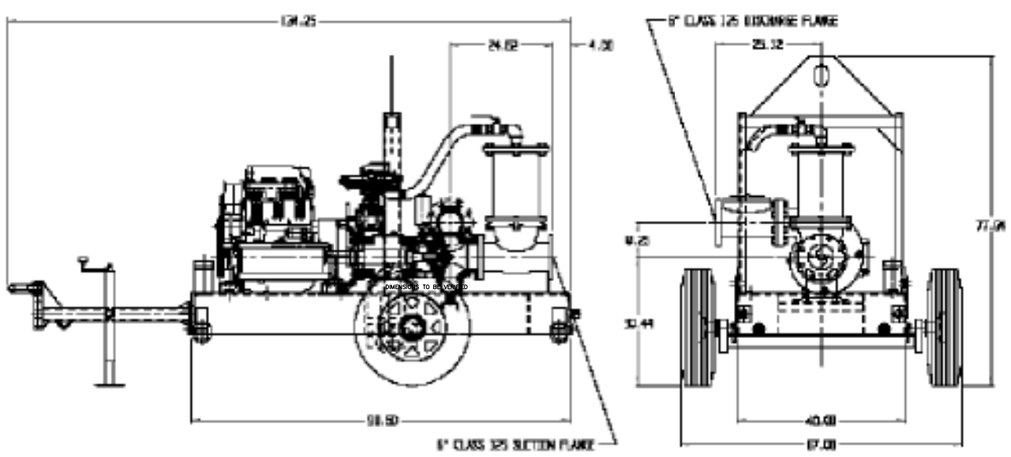

TRAILER MOUNTED PUMP

DIMENSIONS TO BE VERIFIED

N.T.S.

REGISTERED PROFESSIONAL ENGINEER 5465 OREGON JULY 25, 1961 DAVID K. BOATMAN

EXPIRES 12/31/2011

H B H Consulting Engineers
20055 SW Pacific Hwy, Suite 201
Sherwood, Oregon 97140
503/625-8065 ■ fax 503/625-1531
email: mail@hbh-consulting.com

Designed By: CLL | Drawn By: CLL | Checked By: DKB | Submittal No: PRELIMINARY | Layout: DETAIL2

File: L:/2004-027-17/DWG/DETAILS

REV.	DATE	DESCRIPTION	BY

0" 1"
IF THIS LINE IS NOT 1 INCH SCALE IS NOT AS SHOWN

CITY OF ROCKAWAY BEACH
P.O. BOX 5; BAY CITY, OR 97136

IMPOUNDMENT IMPROVEMENTS
ROCKAWAY BEACH, OREGON

MISCELLANEOUS DETAILS

Sheet No. 22 of 22

Date 4/14/11

2004-027-17

Attachment H: Jetty Creek Fish Screen Design Sheets

OR Dept. of Fish and Wildlife

Jetty Creek Fish Passage Restoration
Lower Nehalem Watershed Council

OWRD Water Supply Development Account
Loan and Grant Application

JETTY CREEK FISH SCREEN

SCREEN INFORMATION

SCREEN TYPE: FLAT PANNEL WIPER SCREEN
CLEANING SYSTEM: CABLE DRIVE BRUSH
POWER SYSTEM: GRID POWER
WATER RIGHT: 2 CFS
STRUCTURE TYPE: CONCRETE

OWNERS

CITY OF ROCKAWAY BEACH
LUKE SHEPARD (PUBLIC WORKS DIRECTOR)
276 S. HWY 101, P.O. BOX 5
ROCKAWAY BEACH, OR 97136

ENGINEER

OREGON DEPARTMENT OF FISH & WILDLIFE
FISH DIVISION
FISH PASSAGE AND SCREENING PROGRAM
4034 FAIRVIEW INDUSTRIAL DRIVE SE,
SALEM, OR 97302
(503) 947-9234

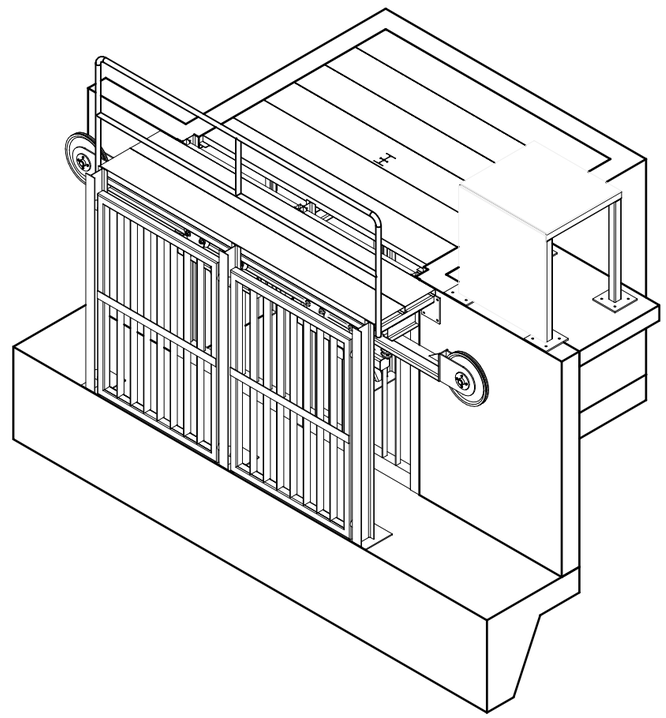

SHEET LIST

G-SHEETS
G1 TITLE SHEET
G2 STANDARD ABBREVIATIONS & SYMBOLS
G3 STANDARD CONSTRUCTION SPECIFICATIONS
S4 STANDARD CONSTRUCTION SPECIFICATIONS CONT'D
G5 STANDARD CONSTRUCTION SPECIFICATIONS CONT'D
G6 STRUCTURE VIEWS
S-SHEETS
S1 FOUNDATION LAYOUT
S2 WALL LAYOUT
S3 WALL, FOUNDATION SECTIONS & SCREEN EMBED DETAILS
S4 CIRCULAR BLOCKOUT & REINFORCEMENT DETAILS
M-SHEETS
M1 SCREEN LAYOUT
M2 SCREEN LAYOUT
M3 WALKWAY FRAME LAYOUT AND TROLLY BEAM DETAILS
M4 WALKWAY FRAME & TROLLEY BEAM DETAILS
M5 LARGE SHEAVE, HUB & SHAFT DETAILS
M6 BAFFLE FRAME LAYOUT & DETAILS
M7 WIPER BRUSH ASSEMBLY
M8 WIPER BRUSH ASSEMBLY
M9 TRASHRACK LAYOUT & DETAILS
M10 WALKWAY LAYOUT & DETAILS
M11 HANDRAIL LAYOUT & BAFFLE GUIDE DETAILS
M12 DRIVE STAND LAYOUT & DETAILS

PROJECT LOCATION

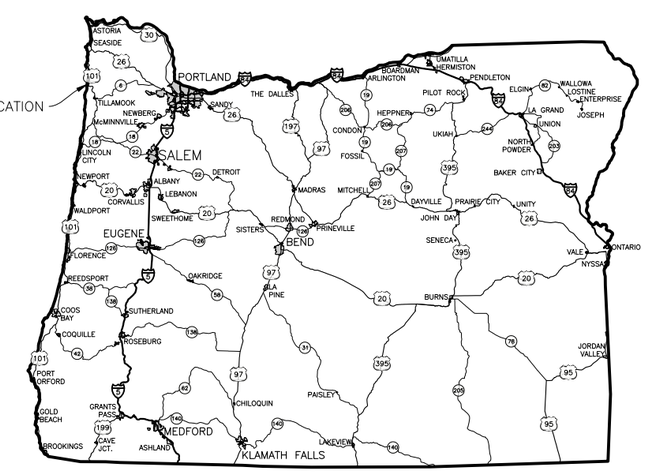

1 G1 DETAIL INFO
VICINITY MAP
SCALE: N.T.S.

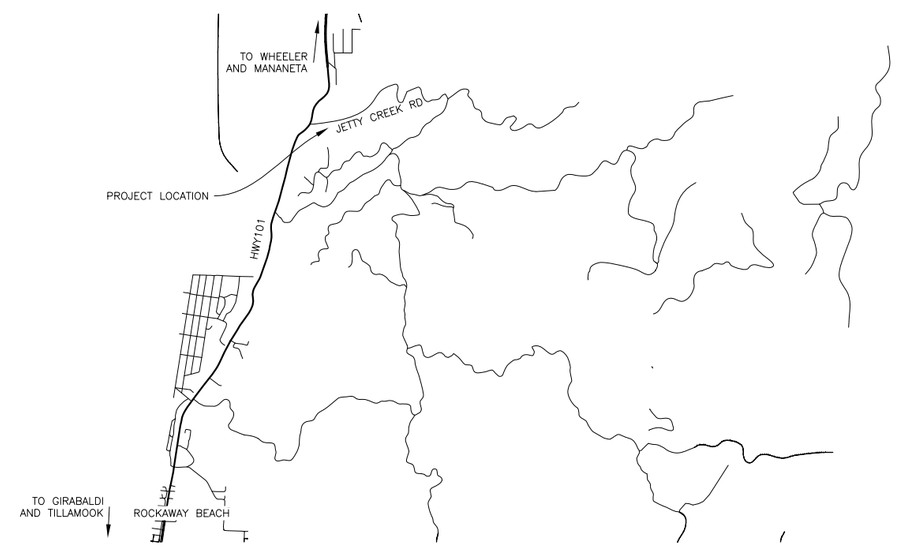

2 G1 DETAIL INFO
LOCATION MAP
SCALE: N.T.S.

PRELIMINARY NOT FOR CONSTRUCTION

Oregon
DEPARTMENT OF FISH AND WILDLIFE
FISH DIVISION
FISH SCREENING AND PASSAGE PROGRAM
4034 FAIRVIEW INDUSTRIAL DR. S.E.
SALEM, OREGON 97302
PHONE: (503) 947-6234 FAX: (503) 947-6203

REV.	DATE	DESCRIPTION

CITY OF ROCKAWAY BEACH FISH SCREEN
JETTY CREEK
CITY OF ROCKAWAY BEACH
TITLE SHEET

DATE: 1-19-2016
DESIGN BY: JMW
DRAWN BY: LWS
CHECKED BY:
NOTES:

FILE NO. S-01-0051
SHEET G1
OF

X:\PROJECT FOLDERS\BASIN 1 - NORTH COAST\S-01-0051 JETTY CREEK SCREEN\DESIGN\AUTOCAD FILES\JETTY_CREEK_G-SHEETS.DWG - Tuesday, January 19, 2016 9:01:28 AM -
11X17 PLOTTED AT HALF SCALE

A – TOE WIDTH
AB – ANCHOR BOLT
ABDN – ABANDON
AC – ASPHALT CONCRETE
AD – AREA DRAIN
ADDL – ADDITIONAL
ADJ – ADJACENT
AFF – ABOVE FINISH FLOOR
AFG – ABOVE FINISH GRADE
AGGR – AGGREGATE
AJ – ADJUSTABLE
AL – ALUMINUM
ALTN – ALTERNATE
ALUM – ALUMINUM
ANCH – ANCHOR
APPROX – APPROXIMATE
APVD – APPROVED
AUX – AUXILIARY
AVG – AVERAGE

℄ – BOUNDARY LINE
BLDG – BUILDING
BLK – BLOCK
BM – BEAM OR BENCHMARK
BO – BOTTOM OF
BOP – BOTTOM OF PIPE
BOT – BOTTOM
BRG – BEARING
BRKR – BREAKER
BTW – BETWEEN
BV – BALL VALVE

°C – DEGRESS CENTRIGRADE
C – CONDUIT
C TO C – CENTER TO CENTER
CAB – CABINET
CB – CATCH BASIN
CC – CONTROL CABLE
CD – CHECK DAM
CFM – CUBIC FEET PER MINUTE
CFS – CUBIC FEET PER SECOND
CHAN – CHANNEL
CJ – CONSTRUCTION JOINT
℄ OR CL – CENTERLINE
CLR – CLEAR
CMP – CORRUGATED METAL PIPE
CONC – CONCRETE
CONN – CONNECTION
CONSTR – CONSTRUCTION
CONT – CONTINUOUS'
CONT'D – CONTINUED
COORD – COORDINATE
CTR – CENTER
CNTD – CENTERED
CU FT – CUBIC FEET
CU IN – CUBIC INCH
CU YD – CUBIC YARD
CV – CHECK VALVE

Db – BAR OR BOLT DIAMETER
DEG – DEGREE
DET – DETAIL
DF–L – DOUGLAS FIR/LARCH
DIA – DIAMETER
DISCH – DISCHARGE
DTI – DIRECT TENSION INDICATOR
DTLS – DETAILS
DWG – DRAWING

E – EAST
EA – EACH
EL – ELEVATION
ELEV – ELEVATION
EF – EACH FACE
EOC – EDGE OF CONCRETE
EOP – EDGE OF PAVING
EP – EDGE OF PAVING
EQL – EQUAL
EW – EACH WAY
EXP – EXPANSION
EXST – EXISTING

°F – DEGREES FARENHEIT
FAB – FABRICATION
f'c – CONCRETE COMPRESSIVE STRENGTH
FB – FLAT BAR
FD – FLOOR DRAIN
FDN – FOUNDATION
FF – FINISHED FLOOR
FG – FINISH GRADE
FNSH – FINISH
FT – FOOT OR FEET
FTG – FOOTING
Fy – STEEL TENSILE YIELD STRESS

G – GROUND
GA – GAUGE
GAL – GALLON
GALV – GALVANIZED
GRTG – GRATING
GV – GATE VALVE

H – HEIGHT
HDPE – HIGH DENSITY POLYETHYLENE PLASTIC
HGL – HYDRAULIC GRADE LINE
HK – HOOK
HORIZ – HORIZONTAL
HP – HORSE POWER
HWL – HIGH WATER LEVEL

ID – INSIDE DIAMETER
IE – INVERT ELEVATION
IN – INCH
INV – INVERT

JCT – JUNCTION
JT – JOINT

KIP – THOUSAND POUNDS
KW – KILOWATT

L – LENGTH
LAT – LATITUDE
LB(S) – POUND(S)
LF – LINEAR FEET
LG – LONG
LLV – LONG LEG VERTICAL
LONG – LONGITUDINAL
LPT – LOW POINT
LWL – LOW WATER LEVEL

MATL – MATERIAL
MAX – MAXIMUM
MB – MACHINE BOLT
MFD – MANUFACTERED
MFR – MANUFACTURER
MH – MANHOLE
MIN – MINIMUM
MISC – MISCELLANEOUS
MTL – METAL

N – NORTH
NA – NOT APPLICABLE
NC – NORMALLY CLOSED
NEUT – NEUTRAL
NGVD – NATIONAL GEODETIC VERTICAL DATUM
NIC – NOT IN CONTACT
N.O. – NORMALLY OPEN
NO. – NUMBER
NS – NONSHRINK
NTE – NOT TO EXCEED
NTS – NOT TO SCALE

O TO O – OUT TO OUT
OC – ON CENTER
OD – OUTSIDE DIAMETER OR OVERFLOW DRAIN
OF – OUTSIDE FACE
OPNG – OPENING

PBE – POOL BOTTOM ELEVATION
PERF – PERFORATED
PERP – PERPENDICULAR
PH – PHASE
PJF – PREMOLDED JOINT FILLER
℗ – PROPERTY LINE
PL – PLATE
PLWD – PLYWOOD
PRES – PRESSURE
PROP – PROPERTY
PSF – POUNDS PER SQUARE FOOT
PSI – POUNDS PER SQUARE INCH
PT – PRESSURE TREATED
PVC – POLYVINYL CHLORIDE PLASTIC
PVMT – PAVEMENT

R OR RAD– RADIUS
RC – REINFORCED CONCRETE
RD – ROAD
REF – REFERENCE
REINF – REINFORCED
REQD – REQUIRED
RR – RIPRAP/RAILROAD
R.O. – ROUGH OPENING
RPM – REVOLUTION PER MINUTE

SB – SEDIMENT BASIN
SCH – SCHEDULE
SECT – SECTION
SF – SQUARE FEET
SHT – SHEET
SQ – SQUARE
SQ FT – SQUARE FEET
SQ IN – SQUARE INCHES
SPECS – SPECIFICATIONS
S.S./SS – STAINLESS STEEL
STL – STEEL
STR – STRUCTURE
STRL – STRUCTURAL
STRUCT – STRUCTURAL

T&B – TOP AND BOTTOM
T&G – TONGUE AND GROOVE
T/ – TOP OF
TF – FOOTING THICKNESS
TH – TOP HINGED
THD – THREAD
THK – THICKNESS
THRU – THROUGH
TOC – TOP OF CONCRETE
TOS – TOP OF SLAB
TOW – TOP OF WALL
TS – TUBE STEEL
TW – WALL THICKNESS
TYP – TYPICAL

UHMW – ULTRA–HIGH MOLECULAR WEIGHT POLYETHYLENE PLASTIC
UNO – UNLESS NOTED OTHERWISE
UON – UNLESS OTHERWISE NOTED

V – VOLTS, VALVE
VB – VAPOR BARRIER
VEL – VELOCITY
VERT – VERTICAL

W – WEST OR WIDTH
W/ – WITH
WD – WOOD
WS – WATER SURFACE, WATERSTOP
WSE – WATER SURFACE ELEVATION
WTR – WATER

XFMR – TRANSFORMER

∠ – ANGLE
° – DEGREES
Δ – DELTA
ø – DIAMETER
± – PLUS OR MINUS
@ – AT

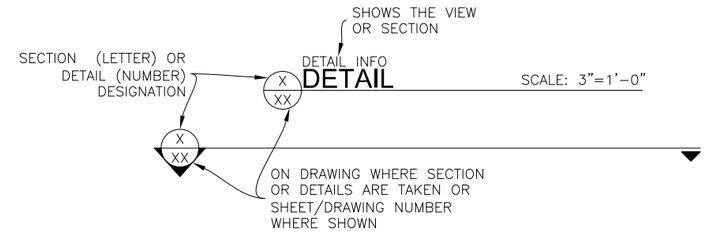

DETAIL AND SECTION DESIGNATION

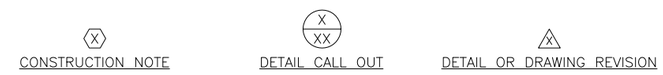

CONSTRUCTION NOTE DETAIL CALL OUT DETAIL OR DRAWING REVISION

CONSTRUCTION AND DRAWING REFERENCES

TREE (ANY) CONTROL POINT STATION SETUP (TS)OR(BS) UTILITY POLE

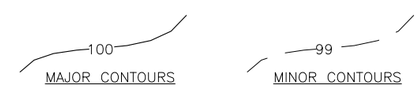

MAJOR CONTOURS MINOR CONTOURS

CIVIL SHEETS MARKERS AND LINE TYPES

1 G2 STANDARD ABBREVIATIONS & SYMBOLS SCALE: N.T.S.

PRELIMINARY NOT FOR CONSTRUCTION

Oregon
DEPARTMENT OF FISH AND WILDLIFE
FISH DIVISION
FISH SCREENING AND PASSAGE PROGRAM
4034 FAIRVIEW INDUSTRIAL DR. S.E.
SALEM, OREGON 97302
PHONE: (503) 947-6234 FAX: (503) 947-6203

REV.	DATE	DESCRIPTION

CITY OF ROCKAWAY BEACH FISH SCREEN
JETTY CREEK
CITY OF ROCKAWAY BEACH
STANDARD ABBREVIATIONS & SYMBOLS

DATE: 1-19-2016
DESIGN BY: JMW
DRAWN BY: LWS
CHECKED BY:
NOTES:

FILE NO.
SHEET G2
OF

X:\PROJECT FOLDERS\BASIN 1 – NORTH COAST\S-01-0051 JETTY CREEK SCREEN\DESIGN\AUTOCAD FILES\JETTY_CREEK_G-SHEETS.DWG – Tuesday, January 19, 2016 9:01:42 AM –
11X17 PLOTTED AT HALF SCALE

X:\PROJECT FOLDERS\BASIN 1 - NORTH COAST\S-01-0051 JETTY CREEK SCREEN\DESIGN\AUTOCAD FILES\JETTY_CREEK_G-SHEETS.DWG - Tuesday, January 19, 2016 9:01:43 AM -
11X17 PLOTTED AT HALF SCALE

GENERAL

1 GENERAL
1.1 DESCRIPTION
A. FOR THE PURPOSE OF THIS PROJECT STAFF FROM THE OREGON DEPARTMENT OF FISH AND WILDLIFE WILL BE PERFORMING THE CONSTRUCTION ACTING AS THE CONTRACTOR AND WILL HEREIN AFTER BE REFERRED TO AS CONTRACTOR
B. INTENT: THE SCOPE OF WORK IS TO CONSTRUCT A REINFORCED CONCRETE SCREEN BOX, METAL SCREEN, TRASHRACKS, GANTRY AND _____ FOR THE POINT OF DIVERSION KNOWN AS _____. OFF CHANNEL WORK INCLUDES BUT IS NOT LIMITED TO: EXCAVATION, SPOILS DISPOSAL, SUB-BASE PREPARATION, STRUCTURAL FILL PLACEMENT, FORMING, PLACING, AND FINISHING PORTLAND CEMENT CONCRETE, BACKFILL & COMPACTION, FURNISHING AND INSTALLING RIP RAP, FURNISHING AND INSTALLING FISH SCREEN, SITE CLEAN UP AND RESTORATION. CONTRACTOR SHALL INCLUDE ALL NECESSARY MATERIALS AND LABOR TO COMPLETE ALL WORK SHOWN ON THE DRAWINGS AND DESCRIBED IN THESE SPECIFICATIONS.
C. COMPLETION TIME: ALL OFF CHANNEL WORK SHALL BE COMPLETED BETWEEN _____,
D. COST FOR DELAY: NONE SPECIFIED
E. TEMPORARY FACILITIES: THE CONTRACTOR SHALL FURNISH ALL TEMPORARY FACILITIES SUCH AS POWER, LIGHTS, HEAT, WATER, TELEPHONE, SANITARY AND JOB OFFICE AS NEEDED TO PERFORM THE WORK.
F. THE OWNER WILL BE REQUIRED TO OBTAIN AND PAY FEES FOR ANY OTHER NECESSARY PERMITS IN _____. PRIOR TO COMMENCEMENT OF WORK, THE OWNER SHALL CONFIRM WITH THE ENGINEER THAT THE AGENT OF THE PROPERTY HAS GIVEN CLEARANCE FOR THE WORK. THE AGENT HAS RECEIVED THE FILL AND REMOVAL PERMITS. THE OWNER SHALL BE RESPONSIBLE FOR COMPLYING WITH ALL CONDITIONS AND REQUIREMENTS OF THESE PERMITS DURING CONSTRUCTION.
G. ENVIRONMENTAL PROTECTION:
1. THE CONTRACTOR SHALL AT ALL TIMES DIRECT HIS/HER ACTIVITIES IN SUCH A MANNER TO MINIMIZE ADVERSE EFFECTS ON THE ENVIRONMENT. HANDLING OF FUELS AND OTHER SUBSTANCES SHALL BE CONDUCTED SO NO SPILLAGE OR LEAKING, DIRECTLY OR THROUGH THE SOIL, WILL OCCUR THAT MAY POLLUTE ADJACENT STREAMS OR GROUND WATER SUPPLIES, OR BECOME HAZARDOUS TO HUMAN OR AQUATIC LIFE.
2. PRESSURE WASH AND WIRE BRUSH CLEAN ALL NEW EXPOSED CONCRETE SURFACES PRIOR TO FLOODING WITH WATER. REMOVED ALL FORM OIL, SCALE, CEMENT DUST, AND RESIDUE FROM EXPOSED SURFACES. DO NOT DAMAGE FINISHED SURFACES THAT REQUIRE A MEASURED SURFACE ROUGHNESS TOLERANCE.
3. EXCAVATION, BACKFILL AND PLACEMENT OF CONCRETE SHALL BE IN WORK AREAS ISOLATED FROM THE ACTIVE FLOWING RIVER BY SUITABLE SETTLING BASIN AWAY FROM THE STREAM TO PREVENT CONTAMINATION OF THE STREAM. UPON COMPLETION OF CONSTRUCTION, THE SURFACES SHALL BE RESTORED AT THE SETTLING BASIN.
4. IT WILL BE THE CONTRACTOR'S RESPONSIBILITY TO COORDINATE HIS/HER CONSTRUCTION SCHEDULE AND MATERIAL AND EQUIPMENT DELIVERIES WITH THE AFOREMENTIONED PROVISIONS AND RESTRICTION AND WITH THE REQUIREMENTS OF SECTION 1.1 (B) AND WITH THE REQUIREMENTS OF APPLICABLE PERMITS.
H. ACCESS TO THE WORK AREA
1. CONTRACTOR SHALL COORDINATE ACCESS TO THE SITE WITH AGENT FOR _____ FOR ACCESS TO THE WORK AND STORAGE AREAS DURING THE CONSTRUCTION PERIOD. ANY WORK REQUIRED TO MAKE THESE ROADS SERVICEABLE FOR CONSTRUCTION OPERATIONS SHALL BE AT THE CONTRACTOR'S EXPENSE.
2. THE CONTRACTOR SHALL REPAIR ANY DAMAGE TO ACCESS FACILITIES AND ROADWAYS FOR WHICH THE OWNER IS RESPONSIBLE AND SHALL RESTORE THEM TO CONDITIONS AT LEAST EQUALING PRE-CONSTRUCTION CONDITIONS.
3. THE CONTRACTOR SHALL TAKE REASONABLE MEASURE TO LIMIT ENTRY OF PERSONS AND VEHICLES TO THE WORK AREAS TO EMPLOYEES, AGENTS, ETC., REQUIRED FOR THE PERFORMANCE OF THIS CONTRACT, AND TO AUTHORIZED PERSONNEL OF FEDERAL, STATE AND LOCAL AGENCIES, AND TO OTHERS HAVING A RIGHT THERETO.
I. RESTORATION OF EXISTING FACILITIES: UPON COMPLETION OF THE CONSTRUCTION WORK, THE CONTRACTOR SHALL RESTORE ALL AREAS UTILIZED FOR PERFORMANCE OF THE WORK TO A CONDITION SATISFACTORY TO THE AGENT FOR THE LANDOWNER MEETING PRE-CONSTRUCTION CONDITIONS.

EARTHWORK

1 GENERAL
1.1 DESCRIPTION
A. WORK INCLUDED - ALL EXCAVATION AND BACKFILL WITHIN THE PERIMETER OF THE STRUCTURE, THE DITCH(ES), EXCAVATION(S), THE BYPASS PIPE EXCAVATION, THE DISCHARGE PIPE EXCAVATION, THE JUNCTION BOX EXCAVATION. INCLUDING BUT NOT LIMITED TO STRIPPING, EXCAVATION AND BACKFILL FOR FOOTINGS, WALLS AND SLABS. FOUNDATION DRAINS AND BASE ROCK PLACEMENT FOR SLABS ON GRADE. THIS ITEM ALSO INCLUDES REMOVAL OF ALL UNSUITABLE MATERIALS, ALL DEMOLITION, OTHER SITE WORK, AND RELATED OPERATIONS FROM THE SITE AS WELL AS PURCHASING SELECT MATERIALS REQUIRED BY SPECIFICATION.
1.2 SUBMITTALS
A. STRUCTURAL FILL - SUBMIT SAMPLES OF PROPOSED STRUCTURAL FILL MATERIALS TO THE ENGINEER ALONG WITH LABORATORY ANALYSIS SHOWING THAT THE MATERIAL MEETS JOB SPECIFICATIONS.
1.3 QUALITY ASSURANCE
A. NOTIFY THE ENGINEER 48 HOURS PRIOR TO REQUIRED TESTING OR INSPECTIONS.
B. REQUIRED TESTS AND INSPECTIONS
1. SUBGRADE INSPECTION BY THE ENGINEER'S REPRESENTATIVE PRIOR TO BEGINNING ANY FILL.
2. ONE COMPACTION TEST PER EVERY 4000 SF OF SUBGRADE PLACEMENT. 2 FEET OF DEPTH MAX PLACEMENT WITHOUT A TEST.
3. SUBGRADE INSPECTION PRIOR TO COVERING WITH BASEROCK.
C. ALL TESTS WILL BE PERFORMED BY THE OWNER'S TESTING LAB. REQUIRED TESTS AS LISTED ABOVE WILL BE PAID BY THE OWNER. RETESTS OF FAILING TESTS WILL BE BILLED TO THE CONTRACTOR. ANY OVERTIME PREMIUM WILL BE PAID BY THE CONTRACTOR.
D. ANY FILL MATERIAL USED IN THE PROJECT SHALL BE FREE OF CONSPICUOUS PLASTICITY, FROZEN MATERIAL, PEAT, OR WASTE AS LARGE ROOTS, OVERSIZE ROCK, LUMBER, LOGS AND OTHER FOREIGN MATERIAL AND SHALL BE FURNISHED FROM AN APPROVED SOURCE.

2 PRODUCTS
2.1 FILL MATERIALS
A. STRUCTURAL FILL - FURNISH STRUCTURAL FILL MEETING THE REQUIREMENTS LISTED BELOW:
1. WELL GRADED GRANULAR MATERIALS. PIT RUN GRAVEL, CRUSHED ROCK OR QUARRY ROCK.
2. NO PEAT, ROOTS, SOD OR OTHER DELETERIOUS MATERIALS.
3. MAXIMUM SIZE = 4"ø
4. LESS THAN 12% PASSING #200 SIEVE.
5. PRIOR APPROVAL REQUIRED BEFORE PLACING FILL MATERIALS.

EARTHWORK CONT'D

2.1 FILL MATERIALS CONT'D
B. CRUSHED AGGREGATE BASE FOR SLABS - 1" MINUS CRUSHED GRAVEL OR CRUSHED ROCK FREE OF ORGANIC MATERIAL.
C. STREAM BED MATERIAL - COORDINATE WITH ODFW DISTRICT BIOLOGIST
D. BACKFILL
1. ALL BACKFILL MATERIAL REQUIRED TO OBTAIN INDICATED GRADES NOT UNDER STRUCTURES SHALL BE SELECTED NATURAL FILL MATERIAL FROM EITHER PREAPPROVED ON-SITE EXCAVATION OPERATIONS OR FROM AN APPROVED OFF-SITE BORROW. IT SHALL CONSIST OF THE FOLLOWING:
(A). WELL GRADED FREE DRAINING OR CRUSHED ROCK UP TO 1½" MAXIMUM SIZE
(B). NOT MORE THAN 15% OF FINES PASSING THROUGH A #200 SIEVE.
2.2 PERFORATED FOUNDATION DRAINS
A. PERFORATED PIPE
1. ASTM D2729, 4"ø RIGID PVC PIPE.
2. SLOTS OR ⅛" DIAMETER HOLES, 6" OC, IN 2 ROWS AT 80 DEGREE ANGLES
3. WRAP WITH FILTER FABRIC
B. FILTER FABRIC
1. NON-WOVEN POLYPROPYLENE
2. MINIMUM TENSILE STRENGTH 100 PSI (ASTM D1682)
3. GRAB ELONGATION 15-70 (ASTM D1682)
4. MINIMUM BURST STRENGTH 200 PSI (ASTM D751)
C. DRAIN ROCK - CLEAN NATURAL GRAVEL MEETING THE FOLLOWING GRADATION:

SIEVE	%PASSING
1½"	100
¾"	70-100
#4	40-100
#100	0-8
#200	0-4

2.3 RIPRAP
A. ROCK
1. HARD, DENSE, AND DURABLE
(A). MINIMUM SPECIFIC GRAVITY, ASTM C97: 2.5
2. MAXIMUM ABSORPTION, ASTM C97: 2%
3. MAXIMUM LOSS, SULFATE SOUNDESS, ASTM C88: 10%
B. EITHER QUARRY ROCK OR BOULDERS MAY BE USED FOR RIPRAP
C. SHAPE
1. PREDOMINANTLY ANGULAR
2. MAXIMUM DIMENSION NOT GREATER THAN 3 TIMES MINIMUM DIMENSION
3. MAXIMUM DIAMETER AND/OR WEIGHT INDICATED ON PLANS
D. GRADATION
1. REASONABLY WELL GRADED WITH A MIXTURE OF STONE SIZES RANGING FROM LARGEST TO SMALLEST SUCH THAT RIPRAP GRADATION SHALL FALL WITHIN THE FOLLOWING LIMITS:
(A). 24" RIPRAP

PARTICLE ø	% PASSING
36"	100
24"	50
1"	0

3 EXECUTION
3.1 GENERAL
A. THE CONTRACTOR IS RESPONSIBLE FOR LOCATING ALL UTILITIES PRIOR TO BEGINNING EXCAVATION.
B. THE CONTRACTOR IS RESPONSIBLE FOR PROTECTING OPEN EXCAVATIONS FROM THE WEATHER AND SLOPE INSTABILITY. MATERIAL WHICH IS MADE UNSUITABLE BY THE WEATHER WILL BE REPLACED BY THE CONTRACTOR WITH STRUCTURAL FILL AT NO COST TO THE OWNER/AGENCY.
3.2 SITE PREPARATION
A. STRIP THE ENTIRE AREA WITHIN THE STRUCTURE PERIMETER TO A MINIMUM OF 6 INCHES, TO INCLUDE ALL GRASS, WEED ROOTS, TRASH AND VEGETATION. REMOVE ALL MATERIALS GENERATED BY THE STRIPPING OPERATION FROM THE SITE. STOCKPILE ANY MATERIAL DETERMINED BY THE ENGINEER'S REPRESENTATIVE AS SUITABLE FOR FUTURE USE.
B. AFTER STRIPPING PROOF ROLL THE STRUCTURE SITE.
1. PROOF ROLL WITH FULLY LOADED, TANDEM AXLE DUMP TRUCK OR EQUIVALENT,
2. PROVIDE TWO COMPLETE COVERAGES IN OPPOSITE DIRECTIONS.
3. NOTIFY ENGINEER'S REPRESENTATIVE AND HAVE THEM PRESENT DURING PROOF ROLLING
4. OVEREXCAVATE AREAS THAT BUMP OR RUT WITH COMPACTED STRUCTURAL FILL WHERE DIRECTED BY THE ENGINEER.
3.3 EXCAVATION
A. THE CONTRACTOR SHALL EXCAVATE TO THE LINES AND GRADES SHOWN ON THE DRAWINGS. EXTREME CARE SHALL BE TAKEN TO ISOLATE EXCAVATION OF MATERIALS FROM THE STREAM WATERS WITH COFFERDAM, SANDBAGS, OR OTHERS METHODS TO PREVENT MUD OR DEBRIS FROM ENTERING THE STREAM WATERS.
B. THE CONTRACTOR SHALL BE RESPONSIBLE FOR ALL CARE OF WATER, DEWATERING AND DRAINAGE OF WORK AREAS DURING CONSTRUCTION AND SHALL MAINTAIN ALL EXCAVATIONS AND OTHER PARTS OF THE WORK FREE FROM WATER AS REQUIRED FOR THE SATISFACTORY CONSTRUCTION OF EACH PART OF THE WORK. EXCAVATION SHALL BE PERFORMED IN THE DRY, UNLESS OTHERWISE SPECIFIED. CARE OF WATER, DEWATERING AND DRAINAGE SHALL BE PERFORMED SUCH THAT THE SUBGRADE IS FREE OF SOFT AREAS ATTRIBUTABLE TO AN UNDRAINED SOIL MASS.
C. THE CONTRACTOR SHALL PROPERLY STOCKPILE SLOPES WHERE REQUIRED TO PREVENT EROSION OR SLOPE INSTABILITY. EROSION FENCING SHALL BE PLACED AT THE TOE OF THE STOCKPILE SLOPE.
D. STOCKPILE TOPSOIL AND MATERIAL UNSUITABLE FOR BACKFILL OR EMBANKMENT, BUT SUITABLE FOR USE IN SURFACE RESTORATION; SUCH MATERIAL THEN TO BE USED FOR SURFACE RESTORATION. SEE VEGETATION SECTION.
3.4 BACKFILL AND EMBANKMENT
A. ALL EARTHEN MATERIALS, EXCEPT RIPRAP, PLACED BELOW INDICATED OR DIRECTED FINISH GRADES ARE SUBJECT TO THE REQUIREMENTS OF THIS SUBSECTION EXCEPT AS SPECIFICALLY INDICATED OTHERWISE.
B. GENERAL
1. THE CONTRACTOR SHALL FILL TO LINES AND GRADES SHOWN ON THE DRAWINGS AND AS SPECIFIED HEREIN USING MATERIALS DESIGNATED. WHERE EXISTING SURFACE LEVELS ARE BELOW PLANNED GRADE OR SUBGRADE ELEVATIONS OR EXCESS EXCAVATION IS PERFORMED, BACKFILL SHALL BE PROVIDED TO INDICATED GRADES OR SUBGRADES.

EARTHWORK CONT'D

3.4 BACKFILL AND EMBANKMENT CONT'D
2. BACKFILL OR EMBANKMENT SHALL BE PLACED ON FIRM, UNDISTURBED AND DEWATERED SUBGRADE. NO BACKFILL OR EMBANKMENT SHALL BE PLACED OVER VEGETATION, SURFACE ORGANICS, TREE STUMPS, TOPSOIL, ROOTS OR DEBRIS OF ANY KIND, OR SATURATED OR EXCESSIVELY DISTURBED, FROZEN, OR UNCOMPACTED SUBGRADE. THE CONTRACTOR SHALL PROPERLY DEWATER THE SUBGRADE AND MAINTAIN IT IN A DEWATERED CONDITION FOR CONSTRUCTION OPERATIONS. ALL STUMP HOLES, CAVITIES AND OTHER DEPRESSIONS SHALL BE BACKFILLED. THE CONTRACTOR'S SELECTION OF EQUIPMENT SHALL BE APPROPRIATE TO THE SUBGRADE CONDITIONS.
3. NO BACKFILL OR EMBANKMENT SHALL BE PLACED UNLESS THE INSPECTOR IS PRESENT EXCEPT AS APPROVED BY THE ENGINEER.
C. SOURCES:
1. MATERIALS FOR REQUIRED FILL AND BACKFILL SHALL BE OBTAINED FROM REQUIRED EXCAVATION AND/OR FROM SOURCES SELECTED BY THE CONTRACTOR AND APPROVED BY THE ENGINEER.
2. ALL MATERIALS FROM REQUIRED EXCAVATION AND TRENCHING WHICH ARE SUITABLE FOR EMBANKMENTS, AND/OR BACKFILLING, SHALL BE STOCKPILED IN AN ORDERLY MANNER FOR FUTURE USE.
(A). STOCKPILES SHALL BE LOCATED A SUFFICIENT DISTANCE FROM THE BANKS OF THE EXCAVATION OR TRENCH TO AVOID OVERLOADING AND TO PREVENT SLIDES OR CAVE-INS.
D. PLACEMENT & CONSTRUCTION
1. BACKFILL AND EMBANKMENT MATERIALS SHALL BE PLACED AND COMPACTED (EXCEPT WHERE INDICATED OTHERWISE) IN CONTINOUS HORIZONTAL LAYERS. SUCCEEDING LAYERS SHALL NOT BE PLACED UNTIL THE PRECEDING LAYER HAS BEEN SATISFACTORILY COMPACTED AND TESTED. THE SUBGRADE SHALL BE COMPACTED PRIOR TO PLACEMENT OF THE FIRST LAYER.
(A). COMPACTION BESIDE STRUCTURES: ALL GENERAL BACKFILL PLACED WITHIN 10'-0" OF A STRUCTURE (WALL, FOOTING, SLAB) SHALL BE SPREAD IN UNIFORM LIFTS NOT TO EXCEED 8" IN THICKNESS AND COMPACTED TO 92% OF ITS MAXIMUM MODIFIED PROCTOR DRY DENSITY (ASTM D1557). THE WATER CONTENT AT THE TIME OF COMPACTION SHALL BE WITHIN ±3% OF OPTIMUM.
3.5 GRADES
A. PERFORM ALL WORK TO LINES, GRADES AND CROSS SECTIONS SHOWN ON THE DRAWINGS.
B. FINAL GRADES SHALL MATCH EXISTING GRADES UNLESS OTHERWISE NOTED ON THE DRAWINGS. WHERE FINAL GRADES ARE INDICATED ON THE DRAWINGS, GRADES SHALL SLOPE UNIFORMLY BETWEEN ELEVATIONS SHOWN. ALL FINAL GRADES SHALL BE FREE OF HOLLOWS, WHICH WOULD POND RAINWATER AND SHALL SLOPE TO ALLOW FOR SURFACE DRAINAGE. WHERE PRACTICABLE, NO SUCH SLOPES SHALL BE FLATTER THAN 2%, EXCEPT WHERE SPECIFICALLY SHOWN OTHERWISE. ALL EARTHWORK SHALL HAVE FINISHED SURFACES, WHICH HAVE NEAT, REASONABLY UNIFORM APPEARANCE.
C. ALL MATERIAL SOURCES ARE SUBJECT TO THE ENGINEER'S APPROVAL. APPROVAL OF A MATERIAL SOURCE SHALL NOT BE CONSTRUED AS AN APPROVAL FOR ALL MATERIALS REMOVED FROM THAT SOURCE.
3.6 DEMOLITION AND DISPOSAL
A. ALL DEMOLITION DEBRIS AND ALL WASTE MATERIALS RESULTING FROM CLEARING, GRUBBING, AND REMOVAL OF EXISTING STRUCTURES, ROCK , CONCRETE, AND MISCELLANEOUS DEBRIS, SHALL BE REMOVED FROM THE SITE AND LEGALLY DISPOSED OF BY THE CONTRACTOR IN ACCORDANCE WITH ALL APPLICABLE LAWS, ORDINANCES, RULES, AND REGULATIONS.
3.7 STRUCTURAL FILL
A. PLACE STRUCTURAL FILL, WHERE REQUIRED, BEGINNING AT SUBGRADE, DESCRIBED ABOVE, AND SPREAD IN LEVEL LAYERS NOT EXCEEDING 8" COMPACTED THICKNESS. COMPACT EACH LAYER TO 93% OF MODIFIED PROCTOR MAXIMUM DRY DENSITY (ASTM D1557). THE WATER CONTENT AT THE TIME OF COMPACTION SHALL BE WITHIN ±3% OF OPTIMUM.
3.8 PREPARATION OF GRANULAR BASE FOR SLABS AND FOOTINGS
A. PLACE 6" OF GRANULAR BASE OVER STRUCTURAL FILL OR UNDISTURBED NATIVE SOIL. COMPACT BASE COURSE TO 93% OF MODIFIED PROCTOR MAXIMUM DRY DENSITY (ASTM D1557).
B. FINISH GRADE FOR FOOTINGS TO THE LINES AND GRADES SHOWN ON THE PLANS.
3.9 FOUNDATION DRAINS
A. PLACE 4" PVC PERFORATED PIPE AROUND PERIMETER OF FOUNDATION WALL SURROUND PERFORATED PIPE WITH MINIMUM 2 FOOT BY 2 FOOT LAYER OF DRAIN ROCK OR AS SHOWN ON PLANS AND DETAILS. SEPARATE DRAIN ROCK FROM UNCLASSIFIED FILL WITH FILTER FABRIC. SEE FOUNDATION PLAN AND DETAILS.
3.10 RIPRAP PLACEMENT
A. RIPRAP FOUNDATION PREPARATION
1. SLOPES TO BE PROTECTED BY RIPRAP SHALL BE FREE OF BRUSH, TREES, STUMPS, AND OTHER OBJECTIONABLE MATERIAL AND SHALL BE TRIMMED AND DRESSED TO PRESENT A TRUE, EVEN PLANE WITH NO ABRUPT RIDGES OR DEPRESSIONS. ALL SOFT OR SPONGY MATERIAL SHALL BE REMOVED AS DIRECTED BY THE ENGINEER AND REPLACED WITH STRUCTURAL FILL.
2. EXCAVATION OF RIPRAP TOE TRENCHES SHALL BE COORDINATED WITH THE PLACEMENT OF RIPRAP IN SUCH A MANNER AS TO PREVENT THE TOE TRENCHES FROM BEING FILLED WITH OTHER MATERIALS PRIOR TO THE PLACEMENT OF RIPRAP BEDDING AND STONE; AND ANY SUCH MATERIAL DEPOSITED IN THE TOE TRENCH PRIOR TO PLACEMENT OF RIPRAP SHALL BE REMOVED AND DISPOSED OF AT NO COST TO THE OWNER.
3. SEE PLANS FOR SPECIFIC CONSTRUCTION DETAILS.
B. RIPRAP CONSTRUCTION
1. RIPRAP SHALL BE PLACED ON THE PREPARED SLOPES, IN THE TOE, AND AROUND STRUCTURES WITHIN THE LIMITS SHOWN ON THE DRAWINGS, OR AS OTHERWISE REQUIRED BY THE ENGINEER.
2. THE FINISHED RIPRAP SLOPES SHALL PRESENT A REASONABLY UNIFORM AND REGULAR SURFACE NOT STEEPER THAN THOSE SHOWN ON THE DRAWINGS.
3. THE CONTRACTOR SHALL MAINTAIN THE RIPRAP PROTECTION IN ANY INCOMPLETE REACH UNTIL FINAL ACCEPTANCE AND ANY MATERIAL DISPLACED SHALL BE REPLACED, AT HIS/HER EXPENSE, TO THE SLOPES, LINES AND GRADES SHOWN ON THE DRAWINGS.
4. A COMPLETE REACH OF RIPRAP SHALL CONSIST OF ALL REQUIRED RIPRAP BETWEEN INDICATED DISCONTINUITIES AND SHALL INCLUDE ALL REQUIRED TOE TRENCH BACKFILL.
C. PLACEMENT
1. RIPRAP STONE SHALL BE PLACED ON THE PREPARED BASE IN SUCH A MANNER AS TO PRODUCE A WELL-KEYED MASS OF ROCK WITH INDIVIDUAL STONES TIGHLY IN CONTACT WITH THE LEAST PRACTICABLE AMOUNT OF VOID SPACES.
2. THE FINISHED RIPRAP SHALL BE FREE FROM POCKETS OF STONE LESS THAN THE SPECIFIED MINIMUM SIZE OR WHICH WOULD PREVENT CONTACT BETWEEN THE SPECIFIED SIZES.

EARTHWORK CONT'D

3.10 RIPRAP PLACEMENT CONT'D
3. PLACEMENT BELOW WATER SURFACE SHALL BE CONTROLLED IN A MANNER SATISFACTORY TO THE ENGINEER.
4. PLACEMENT OF SMALL STONE TO CHOKE THE INTERSTICES BETWEEN LARGER ROCKS FOR LEVELING THE SURFACE WILL NOT BE PERMITED.
5. BREAKING OF INDIVIDUAL PIECES IN PLACE EITHER BY BLASTING OR MECHANICAL METHODS WILL NOT BE PERMITTED.
6. RIPRAP SHALL BE PLACED TO ITS FULL COURSE THICKNESS AT ONE OPERATION AND IN SUCH MANNER AS TO AVOID DISPLACING THE UNDERLYING MATERIAL.
7. PLACING RIPRAP BY DUMPING INTO CHUTES OR BY SIMILAR METHODS LIKELY TO CAUSE SEGREGATION OF THE VARIOUS SIZES WILL NOT BE PERMITTED.
8. THE DESIRED DISTRIBUTION OF THE VARIOUS SIZES OF STONES THROUGHOUT THE MASS SHALL BE OBTAINED BY SELECTIVE LOADING AT THE QUARRY OR OTHER SOURCE, BY CONTROLLED BUMPING OF SUCCESSIVE LOADS DURING PLACING, OR BY OTHER METHODS OF PLACEMENT THAT WILL PRODUCE THE SPECIFIED RESULTS.
9. REARRANGING OF INDIVIDUAL STONES BY MECHANICAL EQUIPMENT OR BY HAND WILL BE REQUIRED TO THE EXTENT NECESSARY TO CORRECT DEFICIENCIES.
10. RIPRAP MATERIALS THAT DO NOT MEET THE SPECIFIED REQUIREMENTS FOR SIZE, QUALITY, OR DISTRIBUTION OF SIZES, SHALL BE REMOVED AND REPLACED WITH SUITABLE MATERIALS AT NO ADDITIONAL COST TO THE OWNER/AGENCY.
D. TOLERANCES
1. RIPRAP SHALL BE PLACED TO THE FULL THICKNESS SHOWN ON THE DRAWINGS AND NO MINUS TOLERANCE WILL BE PERMITTED.
2. A GREATER THICKNESS WILL BE PERMITTED PROVIDED THE OUTSIDE SLOPES PRESENT A UNIFORM APPEARANCE WITH A MINIMUM OF PIECES PROJECTING OUTSIDE THE FINISHED SLOPE SURFACE.

VEGETATION

1 GENERAL
1.1 DESCRIPTION
A. COORDINATE WITH LOCAL ODFW BIOLOGIST TO DETERMINE WHICH SPECIES AND PLANTING PLAN FOR ALL DISTURBED OR EXPOSED SOILS DUE TO PROJECT.

CONCRETE FORMWORK

1 GENERAL
1.1 CONTRACT CONDITIONS
A. NONE SPECIFIED
1.2 DESCRIPTION
A. WORK INCLUDED: FORMS FOR ALL CAST-IN-PLACE CONCRETE INDICATED ON THE DRAWINGS AND SUBSEQUENT REMOVAL OF ALL SUCH FORMS.
1.3 REFERENCES
A. GUIDE TO FORMWORK OF CONCRETE, ACI 347, AMERICAN CONCRETE INSTITUTE, CURRENT EDITION.
B. FORMWORK FOR CONCRETE, SP-4, AMERICAN CONCRETE INSTITUTE, CURRENT EDITION.
1.4 SUBMITTALS
A. NONE REQUIRED UNLESS SPECIFICALLY REQUESTED BY ENGINEER.
1.5 PRODUCT DELIVERY, STORAGE AND HANDLING
A. USE ALL MEANS NECESSARY TO PROTECT FORMWORK MATERIALS BEFORE, DURING AND AFTER INSTALLATION AND PROTECT THE INSTALLED WORK AND MATERIALS OF ALL OTHER TRADES.
B. IN THE EVENT OF DAMAGE, IMMEDIATELY MAKE ALL REPAIRS AND REPLACEMENT NECESSARY TO THE APPROVAL OF THE ENGINEER AND AT NO ADDITIONAL COST TO THE OWNER.

2 PRODUCTS
2.1 MATERIALS
A. PLYWOOD FORMS: ⅝" MEDIUM DENSITY OVERLAY FOR ALL EXPOSED CONCRETE. PLYWOOD TO BE NEW FOR THIS PROJECT. BURIED OR PERMANENTLY CONCEALED CONCRETE MAY BE FORMED WITH BB FORMPLY, OR EQUAL, OR LUMBER.
B. ROUND COLUMN FORMS: SONOTUBE OR STEEL FORM
C. KEY, JOINTS AND CHAMFERS: DOUGLAS FIR MATERIAL MOLDING OR APPROVED, CONFORMING TO SHAPE AND DIMENSIONS SPECIFIED OR DETAILED.
D. TIES: METAL TIES, NO METAL WITHIN 1" OF SURFACE AFTER TIE REMOVAL. ALIGN TIE HOLES WHERE FINISH IS EXPOSED.
E. FORM OIL: SEI GCC-100 FRW WATER-BASED, OR APPROVED BY ENGINEER. FORM OIL FOR CONCRETE TO BE PAINTED OR LEFT IN NATURAL FINISH CONTACT ENGINEER FOR INFORMATION.
F. SCREED JOINT: BURKE KEYED KOLD JOINT OR APPROVED BY ENGINEER.
G. EXPANSION JOINTS: BURKE COMPANY FIBER EXPANSION JOINT, OR APPROVED BY ENGINEER.
H. CONTROL JOINTS: ZIPSTRIP OR APPROVED BY ENGINEER

3 EXECUTION
3.1 FORMWORK DESIGN
A. COMPLY WITH ALL PERTINENT RECOMMENDATIONS CONTAINED IN AMERICAN CONCRETE INSTITUTE PUBLICATIONS SP-4 AND ACI-347, CURRENT EDITIONS.
3.2 FORMWORK ERECTION
A. VERIFY LINES, LEVELS AND MEASUREMENT BEFORE PROCEEDING WITH FORMWORK.
B. ALIGN FORM JOINTS. SYMMETRICALLY ALIGN EXPOSED FORM TIE HOLES. MINIMIZE FORM JOINTS.
C. DO NOT APPLY FORM RELEASE AGENT WHERE CONCRETE SURFACES RECIEVE SPECIAL FINISHES OR APPLIED COATINGS WHICH MAY BE AFFECTED BY AGENT.
D. COORDINATE WORK OF OTHER TRADES IN FORMING AND SETTING OPENINGS, SLOTS, RECESSES, CHASE, SLEEVES, BOLTS, FILLETS, ANCHORS AND OTHER INSERTS. CAP ENDS OF FUTURE USE SLEEVES WITH DUCT TAPE.
E. PROVIDE ¾" CHAMFER STRIPS ON EXTERNAL CORNERS OF ALL EXPOSED VERTICAL AND HORIZONTAL CONCRETE WORK UNLESS OTHERWISE NOTED ON PLANS.
F. BRACE ALL FORMWORK TO MAINTAIN DESIGNED POSITION, DIMENSIONS AND CONTOURS.
G. MAKE FORMS TIGHT TO PREVENT CONCRETE LEAKAGE.
H. REMOVE ALL FOREIGN MATTER FROM FORMS BEFORE PLACING CONCRETE.
3.3 ANCHORAGE ITEMS: INSTALL DOWELS, ANCHOR BOLTS, ANCHOR PLATES, ANGLES, INSERTS AND ALL OTHER EMBEDDED ITEMS SHOWN ON DRAWINGS OR AS SPECIFIED.
3.4 MINIMUM CURE TIME PRIOR TO FORM REMOVAL:
A. SLAB ON GRADE EDGE FORMS: 12 HOURS
B. SIDE FORMS FOR WALLS, BEAMS AND COLUMNS: 72 HOURS
C. BEAM SOFFITS AND ELEVATED SLABS: 7 DAYS AND 100% OF DESIGN STRENGTH.

PRELIMINARY NOT FOR CONSTRUCTION

Oregon
DEPARTMENT OF FISH AND WILDLIFE
FISH DIVISION
FISH SCREENING AND PASSAGE PROGRAM
4034 FAIRVIEW INDUSTRIAL DR. S.E.
SALEM, OREGON 97302
PHONE: (503) 947-6234 FAX: (503) 947-6203

REV.	DATE	DESCRIPTION

CITY OF ROCKAWAY BEACH FISH SCREEN
JETTY CREEK
CITY OF ROCKAWAY BEACH
CONSTRUCTION SPECIFICATIONS

DATE: 1-19-2016
DESIGN BY: JMW
DRAWN BY: LWS
CHECKED BY:
NOTES:

FILE NO.
SHEET G3
OF

X:\PROJECT FOLDERS\BASIN 1 - NORTH COAST\S-01-0051 JETTY CREEK SCREEN\DESIGN\AUTOCAD FILES\JETTY_CREEK_G-SHEETS.DWG - Tuesday, January 19, 2016 9:01:45 AM -
11X17 PLOTTED AT HALF SCALE

CONCRETE REINFORCEMENT

1 GENERAL
1.1 CONTRACT CONDITIONS
A. NONE SPECIFIED
1.2 DESCRIPTION
A. WORK INCLUDED: FURNISH AND INSTALL ALL REINFORCEMENT AND ASSOCIATED ITEMS REQUIRED AND/OR INDICATED ON THE DRAWINGS FOR ALL CAST-IN-PLACE CONCRETE.
1.3 REFERENCES
A. INTERNATIONAL BUILDING CODE (IBC)
1. CHAPTER 19
B. AMERICAN CONCRETE INSTITUTE (ACI)
1. BUILDING CODE REQUIREMENTS FOR REINFORCED CONCRETE, ACI 318 LATEST EDITION
2. ACI DETAILING MANUAL, SP-66 LATEST EDITION
3. STANDARD TOLERANCES FOR CONCRETE CONSTRUCTION AND MATERIALS,
C. AMERICAN SOCIETY FOR TESTING AND MATERIALS (ASTM)
1. REINFORCING BARS: ASTM A615 STANDARD SPECIFICATION FOR DEFORMED AND PLAIN BILLET-STEEL BARS FOR CONCRETE REINFORCEMENT.
2. WELDED WIRE FABRIC: ASTM A185, STANDARD SPECIFICATION FOR WELDED STEEL WIRE FABRIC FOR CONCRETE REINFORCEMENT.
D. CONCRETE REINFORCING STEEL INSTITUTE (CRSI)
1. MANUAL OF STANDARD PRACTICE
2. PLACING REINFORCING BARS
1.4 SUBMITTALS
A. SUBMIT SHOP DRAWINGS SHOWING SIZES AND DIMENSIONS FOR FABRICATION AND PLACING OF REINFORCING STEEL AND BAR SUPPORTS.
B. INDICATE BAR SCHEDULES, STIRRUP SPACING AND DIAGRAMS OF BENT BARS. IDENTIFY BAR FUNCTION ON MATERIAL LIST AND SHOP DRAWINGS (TRANSVERSE, LONGITUDINAL, DOWELS, STIRRUPS, TIES, ETC.)
C. DO NOT BEGIN FABRICATION PRIOR TO RECEIVING REVIEWED COPIES OF THE SUBMITTALS FROM THE ENGINEER.
1.5 QUALITY ASSURANCE
A. ACCEPTABLE MANUFACTURERS: REGULARLY ENGAGED IN MANUFACTURE OF STEEL BAR AND WELDED WIRE FABRIC REINFORCING.
B. SUBMIT MILL TEST CERTIFICATES IDENTIFYING CHEMICAL AND PHYSICAL ANALYSIS OF EACH LOAD AND REINFORCING STEEL DELIVERED.
C. NOTIFY ENGINEER IN AMPLE TIME FOR ON SITE OBSERVATION OF REINFORCING STEEL PLACEMENT BEFORE POURING CONCRETE, MINIMUM 72 HOURS.
1.6 PRODUCT DELIVERY, STORAGE AND HANDLING
A. DELIVER REINFORCEMENT TO PROJECT SITE IN BUNDLES MARKED WITH METAL TAGS INDICATING BAR SIZE AND LENGTH.
B. HANDLE AND STORE MATERIALS TO PREVENT CONTAMINATION.

2 PRODUCTS
2.1 CODE REQUIREMENTS
A. COMPLY WITH ALL REQUIREMENTS OF ACI 318 CHAPTER 3 FOR MATERIALS.
B. COMPLY WITH ALL REQUIREMENTS OF ACI 318 CHAPTER 7 FOR FABRICATION OF REINFORCING STEEL.
2.2 MATERIALS
A. BARS: ASTM A615 GRADE 60
NOTE: WHEN WELDING REBAR THE ONLY REBAR THAT IS READY TO WELD IS W-GRADE (LOW ALLOY-A706)
B. WELDED WIRE FABRIC: ASTM A185

3 EXECUTION
3.1 INSTALLATION
A. COMPLY WITH ALL REQUIREMENTS OF ACI 318 CHAPTER 7 FOR FABRICATION AND PLACING OF REINFORCING STEEL.
B. INSPECTION:
1. PRIOR TO INSTALLATION OF THE WORK OF THIS SECTION, CAREFULLY INSPECT THE INSTALLED WORK OF ALL OTHER TRADES AND VERIFY THAT ALL SUCH WORK IS COMPLETE TO THE PONT WHERE THIS INSTALLATION MAY PROPERLY COMMENCE.
2. VERIFY THAT CONCRETE REINFORCEMENT IS INSTALLED IN STRICT ACCORDANCE WITH ALL PERTINENT CODES AND REGULATIONS, THE APPROVED SHOP DRAWINGS AND THE ORIGINAL DESIGN.
C. BENDING
1. BENDING AND CUTTING SHALL CONFORM TO ACI 315 AND APPLICABLE PROVISIONS OF ACI 318. ALL HOOKS SHOWN ON THE DRAWINGS ARE TO BE STANDARD HOOKS EXCEPT WHERE DESIGNATED OTHERWISE.
D. SPLICING
1. REINFORCING BARS SHALL BE FURNISHED IN FULL LENGTHS WHERE POSSIBLE.
2. WHERE SPLICING IS REQUIRED FOR RECOMMENDED, THE LENGTH OF THE SPLICE SHALL BE 48 BAR DIAMETERS.
3. SPLICE DETAILS ARE SUBJECT TO ALL APPLICABLE PROVISIONS OF ACI 318.
4. SPLICES SHALL BE LOCATED AT POINTS OF LOW TENSILE STRESS WHERE POSSIBLE, OTHERWISE DISTRIBUTED TO AVOID A CONCENTRATION OF SPLICES AT A PARTICULAR LINE OR LEVEL.
5. IN ALL CASES SPLICES AT LOCATIONS NOT SHOWN ON THE DRAWINGS ARE SUBJECT TO THE ENGINEER'S APPROVAL.
6. NO SPLICES SHALL BE MADE IN CONCRETE REINFORCEMENT WHERE THE SECTION IS NOT SUFFICIENT TO PROVIDE A MINIMUM OF 2 BAR DIAMETERS CLEAR COVER AND A MINIMUM CLEARANCE OF 3 BAR DIAMETERS BETWEEN SPLICED BARS AND ADJACENT BARS.
7. BARS SHALL BE RIGIDLY WIRED AT SPLICES.
E. DISCREPANCIES: IN THE EVENT OF DISCREPANCY, IMMEDIATELY NOTIFY THE ENGINEER. DO NOT PROCEED WITH INSTALLATION IN AREAS OF DISCREPANCY UNTIL ALL SUCH DISCREPANCIES HAVE BEEN FULLY RESOLVED.
F. PLACING:
1. PLACEMENT OF ALL REINFORCEMENT SHALL CONFORM TO ACI 318. MINIMUM CLEAR DISTANCE BETWEEN BARS 1" OR 1 BAR DIAMETER WHICHEVER IS GREATER.
2. WIRE ALL INTERSECTIONS WITH 18 GUAGE BLACK ANNEALED WIRE. SUPPORT ADEQUATELY BY CHAIRS AND SPACERS; FOOTING REINFORCEMENT MAY BE SUPPORTED ON CONCRETE BLOCKS. MAINTAIN MINIMUM 3 INCH CLEARANCE TO GROUND.
3. BEFORE PLACING CONCRETE, CLEAN REINFORCEMENT OF BOND INHIBITING COATINGS.
4. PLACE, SUPPORT, AND SECURE REINFORCEMENT AGAINST DISPLACEMENT.
5. PROVIDE 2 - #4 x 4'-0" LONG DIAGONALLY AT ALL SLAB-ON-GRADE RE-ENTRANT CORNERS.
6. PROVIDE .0018 TIMES CONCRETE CROSS SECTIONAL AREA REINFORCING STEEL EACH WAY FOR ALL CONCRETE UNLESS OTHERWISE NOTED.
7. ALL LAP SPLICES TO BE 48 BAR DIAMETERS UNLESS OTHERWISE NOTED.
8. WHERE CONCRETE IS TO BE DRILLED LATER FOR ANCHOR BOLTS, EXPANSION SHELLS, EXPANSION BOLTS, ETC., AS REQURIED IN THE DRAWINGS, SPECIAL CARE SHALL BE TAKEN TO COORDINATE EXACT LOCATION OF REINFORCEMENT SUCH THAT IT WILL NOT INTERFERE WITH SUCH DRILLING.

CONCRETE ANCHORS

1 GENERAL
1.1 DESCRIPTION
A. WORK INCLUDED: MECHANICAL ANCHORS FOR CONNECTING WOOD AND STEEL MEMBERS TO CONCRETE. TYPES OF FASTENERS INCLUDED ARE:
1. ADHESIVE ANCHORS
2. EXPANSION ANCHORS
3. POWDER ACTUATED FASTENERS
B. CAST IN PLACE ANCHOR BOLTS ARE SPECIFIED UNDER STRUCTURAL STEEL
1.2 REFERENCES
A. HILTI PRODUCT TECHNICAL GUIDE
B. SIMPSON STRONG-TIE TECHNICAL GUIDE
C. RAMSET/RED HEAD TECHNICAL GUIDE
1.3 SUBMITTALS
A. NOT REQUIRED IF SPECIFIED PRODUCT IS USED.
B. IF ANY PRODUCT(S) OTHER THAN THE SPECIFIED PRODUCT(S) IS/ARE PROPOSED SUBMITTALS MUST BE RECEIVED AND APPROVED PRIOR TO THEIR USE. THESE SUBMITTALS MUST INCLUDE THE FOLLOWING INFORMATION:
1. AN ANCHOR BY ANCHOR LISTING OF THE PROPOSED ANCHORS AND WHAT SPECIFIED ANCHOR EACH PROPOSED ANCHOR IS REPLACING.
2. ICBO REPORT NUMBERS FOR ALL PROPOSED ANCHORS.
3. EVIDENCE THAT THE RATED CAPACITY OF THE PROPOSED ANCHOR IS EQUAL OR GREATER THAN THE SPECIFIED ANCHOR.
4. ANY DIFFERENCES IN HOLE DEPTH, SPACING, EDGE DISTANCE, END DISTANCE OR INSTALLATION METHOD WHICH ARE REQUIRED BY THE PROPOSED PRODUCT.
5. SPECIAL INSPECTION REQUIREMENTS IF DIFFERENT FROM SPECIFIED PRODUCT.
1.4 QUALITY ASSURANCE
A. SPECIAL INSPECTIONS IN ACCORDANCE WITH IBC CHAPTER 17 ARE REQUIRED FOR:
1. ALL EPOXY ANCHORS
2. EXPANSION ANCHORS WHERE SHOWN ON PLANS
3. POWDER ACTUATED FASTENERS WHERE SHOWN ON PLANS

2 PRODUCTS
2.1 MATERIALS
A. EXPANSION ANCHORS
1. HILTI KWIK-BOLT II
2. SIMPSON STRONG-TIE SLEEVE ALL
3. RAMSET/RED HEAD TRUBOLT
B. ADHESIVE ANCHORS
1. HILTI HIT EPOXY ADHESIVE
2. SIMPSON STRONG-TIE ET EPOXY ADHESIVE
3. SIMPSON STRONG-TIE SET EPOXY ADHESIVE
4. RAMSET/RED HEAD C6 EPOXY ADHESIVE
2.2 ALTERNATE MANUFACTURERS
A. ALTERNATE ANCHORS MAY BE SUBSTITUTED SUBJECT TO THE FOLLOWING CONDITIONS:
1. PROPOSED PRODUCT MUST BE SAME TYPE OF ANCHOR AS THE SPECIFIED PRODUCT (I.E. EXPANSION ANCHORS MAY NOT BE SUBSTITUTED WHERE ADHESIVE ANCHORS ARE SHOWN.)
2. DIAMETER FOR EXPANSION ANCHORS AND ADHESIVE ANCHORS MUST BE THE SAME AS THE DIAMETER SHOWN ON THE PLANS.
3. PROPOSED PRODUCT MUST HAVE A CURRENT ICBO REPORT LISTING WHICH COVERS THE SPECIFIC APPLICATION FOR WHICH THE PRODUCT IS BEING USED.
4. CAPACITIES, AS SHOWN IN THE ICBO REPORT, MUST BE EQUAL OR GREATER THAN THE VALUES FOR THE SPECIFIED PRODUCT.
5. SUBMITTALS, AS DESCRIBED IN SECTION 1.3 ABOVE MUST BE APPROVED PRIOR TO THE USE OF ALTERNATE MATERIALS ON THE JOB.

3 EXECUTION
3.1 INSTALLATION - GENERAL
A. DO NOT INSTALL ANY DRILLED IN CONCRETE ANCHORS UNTIL CONCRETE HAS CURED FOR AT LEAST 10 DAYS.
B. MAINTAIN PROPER EDGE DISTANCES AS REQUIRED BY THE MANUFACTURER AND AS SHOWN ON THE PLANS.
3.2 INSTALLATION - EXPANSION ANCHORS
A. INSTALL ACCORDING TO MANUFACTURERS INSTRUCTIONS AND CURRENT ICBO REQUIREMENTS.
3.3 INSTALLATION - ADHESIVE ANCHORS
A. INSTALL ACCORDING TO MANUFACTURERS INSTRUCTIONS AND CURRENT ICBO REQUIREMENTS.
3.4 INSTALLATION - POWDER ACTUATED FASTENERS
A. INSTALL ACCORDING TO MANUFACTURERS INSTRUCTIONS AND CURRENT ICBO REQUIREMENTS.

CAST-IN-PLACE CONCRETE

1 GENERAL
1.1 DESCRIPTION
A. WORK INCLUDED: ALL CAST-IN-PLACE CONCRETE INCLUDING FOOTINGS, SLABS, COLUMNS, BEAMS, SIDEWALKS AND CURBS AND ALL EQUIPMENT TO INSTALL INDICATED ITEMS.
1.2 REFERENCES
A. INTERNATIONAL BUILDING CODE, CURRENT EDITION, CHAPTER 19
B. INTERNATIONAL BUILDING CODE STANDARD 19-3, READY-MIX CONCRETE (BASED ON ASTM C94)
C. ASTM 211 - STANDARD RECOMMENDED PRACTICE FOR SELECTING PROPORTIONS OF CONCRETE
D. AMERICAN CONCRETE INSTITUTE, HOT WEATHER CONCRETING (ACI 305)
E. AMERICAN CONCRETE INSTITUTE, COLD WEATHER CONCRETING (ACI 306)
1.3 SUBMITTALS
A. SUBMIT MIX DESIGNS TO THE ENGINEER AT LEAST 14 DAYS PRIOR TO FIRST SCHEDULED CONCRETE PLACEMENT.
B. SUBMIT SEPARATE MIX DESIGN FOR EACH TYPE OF CONCRETE TO BE USED ON THE PROJECT.
C. MIX DESIGNS MUST INCLUDE THE FOLLOWING:
1. BATCH WEIGHTS PER CUBIC YARD FOR CEMENT, AGGREGATES AND WATER
2. MANUFACTURER, PRODUCT AND AMOUNT PER CUBIC YARD FOR EACH ADMIXTURE
3. MAXIMUM WATER/CEMENT RATIO
4. MANUFACTURER, PRODUCT AND WEIGHT PER CUBIC YARD FOR FIBROUS REINFORCEMENT, WHERE USED
5. SUPPLIER'S MIX NUMBER
6. RECORD OF 30 PAST CYLINDER BREAKS FOR THE MIX BEING USED INDICATING PAST SUCCESSFUL STRENGTH PERFORMANCE IN ACCORDANCE WITH IBC 1905. REQUIRED AVERAGE STRENGTH MUST EXCEED THE DESIGN STRENGTH BY THE AMOUNTS GIVEN IN IBC 1905.
D. SUBMIT DELIVERY TICKET IN ACCORDANCE WITH ASTM C94 SECTION 16. ALL INFORMATION LISTED IN C94 SUBSECTION 16.1, 16.2.7, AND 16.2.8, AND QUANTITY OF WATER ADDED BY THE TRUCK OPERATOR FROM THE MIXING TANK, SHALL BE FURNISHED ON THE DELIVERY TICKET.

CAST IN PLACE CONCRETE CONT'D

1 GENERAL
1.4 QUALITY ASSURANCE
A. CONCRETE PROPORTIONS: CONCRETE SHALL BE STONE CONCRETE COMPOSED OF CEMENT, FINE AGGREGATE, COARSE AGGREGATE AND WATER.
B. DESIGN: PREPARE THE DESIGNS OF MIXES FOR EACH CLASS OF CONCRETE SPECIFIED TO BE USED. DESIGN CONCRETE MIXES IN ACCORDANCE WITH IBC STANDARD 19-3 TO PRODUCE THE STRENGTH FOR EACH TYPE OF CONCRETE WITH THE SLUMPS AND MAXIMUM SIZES OF COURSE AGGREGATE SPECIFIED. COMPRESSIVE STRENGTH, MAXIMUM WATER CONTENT AND MAXIMUM SLUMP SHALL BE AS FOLLOWS:
1. CONCRETE, UNLESS OTHERWISE SPECIFIED:
(A). COMPRESSIVE STRENGTH AT 28 DAYS: 4,500 PSI
(B). MINIMUM CEMENT CONTENT: 6½ SACK PER CUBIC YARD
(C). MAXIMUM SLUMP: 4 INCH
2. AIR ENTRAINMENT:
(A). FOR ALL EXPOSED CONCRETE: 4% TO 7%
(B). FOR ALL OTHER CONCRETE: NOT REQUIRED
C. TESTING
1. TESTING AND ANALYSIS OF CONCRETE WILL BE PERFORMED BY ENGINEER'S REPRESENTATIVE.
2. CONCRETE TESTING IS REQUIRED EVEN WHEN SPECIAL INSPECTION IS NOT REQUIRED.
3. PERFORM THE FOLLOWING TESTS WHENEVER TESTING IS REQUIRED:
(A). SLUMP TEST PER ASTM C143
(B). CAST FOUR CONCRETE CYLINDERS
(C). AIR ENTRAINMENT TEST, WHERE AIR ENTRAINED CONCRETE IS REQUIRED
4. FREQUENCY OF TESTS
(A). NOT LESS THAN ONCE PER DAY
(B). NOT LESS THAN ONCE PER 150 CUBIC YARDS OF CONCRETE IN A GIVEN DAY
(C). NOT LESS THAN ONCE PER 5000 SQUARE FEET OF SLAB OR WALL AREA
5. LAB CURE ALL SAMPLES. PROTECT SAMPLES FROM ADVERSE WEATHER CONDITIONS.
6. TEST CYLINDERS AT THE FOLLOWING DATES:
(A). ONE BREAK AT 7 DAYS
(B). TWO BREAKS AT 28 DAYS
(C). HOLD ONE CYLINDER IN CASE OF PROBLEMS WITH 28 DAY BREAK
7. SEND COPIES OF REPORT TO THE OWNER'S REPRESENTATIVE, THE CONTRACTOR, AND THE ENGINEER
D. WEATHER REQUIREMENTS:
1. COLD WEATHER: CONFORM TO ACI 306. PROCEDURES FOR PLACING AND PROTECTING CONCRETE WORK DURING FREEZING WEATHER BY ENGINEER'S APPROVAL ONLY. ASSUME ALL RISKS FOR CONCRETE WORK DURING FREEZING WEATHER. REMOVE AND REPLACE FROZEN CONCRETE AT CONTRACTOR'S EXPENSE. KEEP ABOVE FREEZING POINT UNTIL THOROUGHLY SET. USE NO ADMIXTURES TO PREVENT FREEZING WITHOUT PRIOR APPROVAL.
2. HOT WEATHER: CONFORM TO ACI 305. TEMPORARILY DISCONTINUE PLACEMENT WHEN, IN THE OPINION OF ENGINEER'S REPRESENTATIVE, CLIMATIC CONDITIONS OF SUN, HEAT, WIND, OR HUMIDITY PREVENT PROPER PLACEMENT, CONSOLIDATION OR FINISHING. USE OF APPROVED RETARDANT ADMIXTURE SHALL BE PROVIDED AT NO ADDITIONAL CHARGE TO THE OWNER IF, IN THE OPINION OF THE ENGINEER, CLIMATIC CONDITIONS SO INDICATE.
E. FIBER REINFORCED CONCRETE
1. WHERE FIBER REINFORCED CONCRETE IS USED ON THE PROJECT A DELIVERY TICKET, SIGNED BY THE WEIGHMASTER, SHALL BE AVAILABLE TO THE ENGINEER'S REPRESENTATIVE UPON REQUEST.
2. THE DELIVERY TICKET SHALL INCLUDE, IN ADDITION TO THE ITEMS NOTED IN SECTION OF ASTM C94, THE TYPE AND AMOUNT OF FIBERS ADDED TO THE CONCRETE MIX.

2 PRODUCTS
2.1 MATERIALS
A. PORTLAND CEMENT: TYPE I OR II LOW ALKALI PCC THAT CONFORMS TO ASTM C-150
B. CONCRETE AGGREGATES: CONFORM TO ASTM C-33. ¾" MAXIMUM SIZE FOR EXPOSED CONCRETE. 1½" MAXIMUM SIZE FOR FOOTINGS.
C. WATER: CLEAN AND FREE OF SUBSTANCES HARMFUL TO CONCRETE
D. GROUTING: NON-SHRINK, PRE-MIXED GROUT. MASTER BUILDERS, SONNEBORN, FOSROC, OR EQUAL. CONFORM TO ASTM C-1107
E. WATER REDUCING ADMIXTURE
1. MID-RANGE WATER REDUCING ADMIXTURE
2. NO CALCIUM CHLORIDE
3. ASTM C-494, TYPE A ADMIXTURE
F. AIR ENTRAINING ADMIXTURES FOR CONCRETE: CONFORM TO ASTM C-260
G. LIQUID MEMBRANE-FORMING COMPOUNDS FOR CURING CONCRETE: CONFORM TO ASTM C-309. PROVIDE SEI GCC-300 OR APPROVED.
H. LIQUID MEMBRANE-FORMING COMPOUNDS HAVING SPECIAL PROPERTIES FOR CURING AND SEALING CONCRETE: CONFORM TO ASTM C-1315. PROVIDE ONLY VOC COMPLIANT MATERIALS.
I. EXPANSION JOINT MATERIAL: PREFORMED, NON-EXTRUDING RESILIENT FILLER SATURATED WITH BITUMINOUS MATERIALS HAVING PRESERVATIVE CHARACTERISTICS. BURKE FIBER EXPANSION JOINT OR APPROVED EQUAL. ½" THICKNESS UNLESS OTHERWISE NOTED ON PLANS.
J. CONCRETE BONDING AGENT: FOX INDUSTRIES FX-752 OR APPROVED BY ENGINEER
2.2 FIBROUS REINFORCEMENT
A. FIBROUS REINFORCEMENT SHALL BE USED IN AREAS SHOWN ON PLANS.
B. FIBROUS REINFORCEMENT SHALL BE POLYPROPYLENE FIBERS AS PRODUCED BY FIBER MESH COMPANY. PROVIDE FIBER MESH 300 FOR USE IN BATCH MIX.
C. RATE OF ADDITION OF FIBERS SHALL BE 1.5LB/CU YD UNLESS A DIFFERENT AMOUNT IS APPROVED BASED ON SUBMITTAL INFORMATION.
2.3 MIXES
A. ALL CONCRETE TO BE PLANT MIX BY A FIRM REGULARLY ENGAGED IN PLANT MIXING AND DELIVERY.
B. MIX AND DELIVER IN ACCORDANCE WITH REQUIREMENTS OF ASTM C94 (READY MIXED CONCRETE) OR ASTM C685 (CONCRETE MADE BY VOLUMETRIC BATCHING AND CONTINUOUS MIXING).

3 EXECUTION
3.1 PERIODIC ON SITE OBSERVATION
A. NOTIFY ENGINEER IN AMPLE TIME FOR ON SITE OBSERVATIONS OF REINFORCING STEEL PLACEMENT BEFORE POURING CONCRETE. MINIMUM 72 HOURS.
B. EXAMINE AREA SCHEDULED TO RECEIVE CONCRETE MIX FOR CONDITIONS THAT WILL ADVERSELY AFFECT EXECUTION, PERMANENCE OR QUALITY OF WORK AS FOLLOWS:
1. FORMWORK ERECTED AND CLEAN
2. REINFORCEMENT PLACED CORRECTLY INTO POSITION
3. WATER, SNOW AND ICE REMOVED FROM FORMS

CAST IN PLACE CONCRETE CONT'D

3.2 FIBROUS REINFORCEMENT
A. ADD FIBROUS CONCRETE REINFORCEMENT TO CONCRETE MATERIALS AT THE TIME CONCRETE IS BATCHED IN AMOUNTS AS STATED SECTION 2.2(C)
B. MIX BATCHED CONCRETE IN STRICT ACCORD WITH FIBROUS CONCRETE REINFORCEMENT MANUFACTURER'S INSTRUCTION AND RECOMMENDATIONS FOR UNIFORM AND COMPLETE DISPERSION
C. PROVIDE CONCRETE MEETING REQUIREMENTS OF THE INTERNATIONAL BUILDING CODE AND ALL SUPPLEMENTS AS ADOPTED BY THE MOST RECENT REPORT OF THE INTERNATIONAL CONGRESS OF BUILDING OFFICIALS
D. PROVIDE THE SERVICES OF A QUALIFIED TECHNICAL REPRESENTATITVE TO INSTRUCT THE CONCRETE SUPPLIER IN PROPER BATCHING AND MIXING OF MATERIALS TO BE PROVIDED, AS REQUIRED.
3.3 INSTALLATION
A. CONCRETE TRANSPORT: MOVE FROM PLANT TO JOB SITE AS RAPIDLY AS PRACTICAL. CONTACT ENGINEER FOR APPROVAL IF TRAVEL TIME BETWEEN PLANT AND PROJECT WILL EXCEED 1 HOUR OF TIME. AVOID SEPARATION OR LOSS OF INGREDIENTS. MAXIMUM CLEAR DROP 5 FEET; 12 FEET IF TREMIE IS USED.
B. VIBRATION OF CONCRETE: COMPACT WITH MECHANICAL VIBRATORS. DO NOT USE FOR TRANSPORTING CONCRETE. PROVIDE A SPARE VIBRATOR AT JOB SITE DURING ALL CONCRETE POURS.
C. BONDING AND GROUTING: BEFORE DEPOSITING NEW CONCRETE ON OR AGAINST CONCRETE WHICH HAS SET, THOROUGHLY CLEAN AND ROUGHEN SURFACES, REMOVING LAITANCE, LOOSE PARTICLES AND FOREIGN MATTER
D. FLOOR LEVELS: SCREED TO TRUE LEVELS OF SLOPES, FURNISH TOLERANCE AT SURFACE OF CONCRETE PLUS OR MINUS ⅛" IN 10 FEET NOT TO EXCEED ⅜" PLUS OR MINUS, OVER ENTIRE AREA. FINISH FLOOR PATCHING SHALL BE FLUSH WITH EXISTING CONCRETE.
E. MECHANICAL SCREEDS ARE PERMITTED
F. POUR RETAINING WALLS IN SECTIONS NOT TO EXCEED 24'. PROVIDE ½" EXPANSION JOINT MATERIALS BETWEEN POURS.
G. CONSTRUCTION JOINTS SHALL BE PLACED FOR EVERY 2000SF OF SLAB POUR. CONTROL JOINTS SHALL BE PLACED EVERY 600SF OF SLAB POUR. SEE DETAILS IN PLANS FOR JOINT CONSTRUCTION.
H. DURING CURING PERIOD, THE CONCRETE SHALL BE PROTECTED FROM DAMAGING MECHANICAL DISTURBANCES, SUCH AS LOAD STRESSES, HEAVY SHOCK, AND EXCESSIVE VIBRATION.
3.4 BACKFILLING
A. DO NOT BACKFILL CONCRETE WALLS UNTIL CONCRETE HAS REACHED 100% OF DESIGN STRENGTH AND MINIMUM 96 HOURS.
B. BACKFILL THAT DOES NOT EXCEED TWO FEET HIGHER ON ONE SIDE THAN THE OTHER IS PERMITTED AFTER 72 HOURS.
3.5 CONCRETE FINISHING
A. PROVIDE FINISHED AS FOLLOWS:
1. VERTICAL EXPOSED CONCRETE: SMOOTH FORM FINISH. FILL ALL HOLES GREATER THAN ¼" IN ANY DIMENSION. REMOVE ALL FINS, PROJECTIONS AND FORM MARKS. PROVIDE CONCRETE SMOOTH TO THE TOUCH WITHIN THE FISHWAY.
2. SLABS: DENSE SMOOTH STEEL TROWEL FINISH.
B. AFTER FORM TIE REMOVAL, FILL HOLES WITH STANDARD GROUT MIXED AS DRY AS FEASIBLE, RAM SOLID AND RUB SMOOTH.
C. SLOPE ALL EXTERIOR WALKS AND SLABS A MINIMUM ⅛" PER FOOT ACROSS WIDTH TO DRAIN.
D. DEFECTS IN POURED-IN-PLACE CONCRETE WORK: CORRECT AGGREGATE POCKETS, HONEYCOMBING OR OTHER DEFECTS BY PATCHING AND SACKING TO SATISFACTION OF ENGINEER OR ENGINEERS REPRESENTATIVE, IMMEDIATELY FOLLOWING FORM REMOVAL. COAT WITH CONCRETE BONDING AGENT BEFORE PATCHING.
E. ALL EXPOSED CONCRETE: GRIND OFF ALL FINS AND PROJECTIONS. SURFACES SHOULD BE TRUE, SMOOTH AND EVEN.
3.6 CURING
A. CURE BY MOISTENING ALL CONCRETE SURFACES. KEEP MOIST FOR 7 DAYS. USE FOG SPRAY CONTINUOUSLY WHEN TEMPERATURES EXCEED 80°F.
B. CURING COMPOUNDS ARE PERMITTED. SUBMIT TO ENGINEER FOR APPROVAL PRIOR TO USE.
3.7 DEFECTIVE WORK
A. REMOVE AND REPLACE, AT CONTRACTOR'S EXPENSE, WHEN DIRECTED BY THE ENGINEER, ANY WORK JUDGED BY THE ENGINEER TO BE IN NON-COMPLIANCE WITH THESE SPECIFICATIONS.
3.8 INSETS, EMBEDMENTS, ETC.
A. CONDUITS AND PIPES SHALL NOT BE PASSED THROUGH STRUCTURAL MEMBERS EXCEPT WHERE DETAILED ON THE DRAWINGS. EXCEPT WHERE DETAILED ON THE DRAWINGS OR APPROVED BY THE ENGINEER, NO REINFORCEMENT SHALL BE DISPLACED OR CUT TO PROVIDE CLEARANCE FOR PENETRATIONS, INSERTS, OR EMBEDMENTS.

STRUCTURAL STEEL

1 GENERAL
1.1 DESCRIPTION
A. WORK INCLUDED: STRUCTURAL STEEL FRAMING MEMBERS, STEEL SUPPORT MEMBERS, AND MISCELLANEOUS STEEL CONNECTIONS AND SUPPORTS WITH REQUIRED BRACING, WELDS, FASTENERS, GUARDRAILS/HANDRAILS, AND GRATING.
1.2 REFERENCES
A. ASTM A36 - STANDARD SPECIFICATION FOR CARBON STRUCTURAL STEEL
B. ASTM A53 - STANDARD SPECIFICATION FOR PIPE, STEEL, BLACK AND HOT DIPPED, ZINC-COATED WELDED AND SEAMLESS
C. ASTM A 123/123M - SPECIFICATION FOR ZINC (HOT-DIP GALVANZIED) COATINGS ON IRON AND STEEL PRODUCTS
D. ASTM A153/153M - SPECIFICATION FOR ZINC COATING (HOT-DIP GALVANIZED) ON IRON AND STEEL HARDWARE
E. ASTM A307 - STANDARD SPECIFICATION FOR CARBON STEEL BOLTS AND STUDS, 60,000 PSI TENSILE STRENGTH
F. ASTM A325 - STANDARD SPECIFICATION FOR HIGH STRENGTH BOLTS FOR STRUCTURAL STEEL JOINTS
G. ASTM F436 - STANDARD SPECIFICATION FOR HARDENED STEEL WASHERS
H. ASTM A500 - STANDARD SPECIFICATION FOR COLD-FORMED WELDED AND SEAMLESS CARBON STEEL STRUCTURAL TUBING IN ROUNDS AND SHAPES
I. ASTM A501 - STANDARD SPECIFICATION FOR HOT-FORMED WELDED AND SEAMLESS CARBON STEEL STRUCTURAL STEEL TUBING
J. ASTM A572 - STANDARD SPECIFICATION FOR HIGH STRENGTH, LOW-ALLOY, COLUMBIUM-VANADIUM STEELS OF STRUCTURAL QUALITY
K. ASTM F593 - STANDARD SPECIFICATION FOR STAINLESS STEEL BOLTS, HEX CAP SCREWS, AND STUDS
L. ASTM F594 - STANDARD SPECIFICATION FOR STAINLESS STEEL NUTS
M. ASTM A 992 - STANDARD SPECIFICATION FOR STEEL FOR STRUCTURAL SHAPES FOR USE IN BUILDING FRAMING
N. RCSC - RESEARCH COUNCIL ON STRUCTURAL CONNECTIONS - SPECIFICATION FOR STRUCTURAL JOINTS USING ASTM A325 OR A490 BOLTS
O. AWS - ANSI/AWS D1.1 - STRUCTURAL WELDING CODE
P. AISC - AMERICAN INSTITUTE FOR STEEL CONSTRUCTION - SPECIFICATION FOR THE DESIGN, FABRICATION AND ERECTION OF STRUCTURAL STEEL FOR BUILDINGS

PRELIMINARY NOT FOR CONSTRUCTION

Oregon
DEPARTMENT OF FISH AND WILDLIFE
FISH DIVISION
FISH SCREENING AND PASSAGE PROGRAM
4034 FAIRVIEW INDUSTRIAL DR. S.E.
SALEM, OREGON 97302
PHONE: (503) 947-6234 FAX: (503) 947-6203

REV.	DATE	DESCRIPTION

CITY OF ROCKAWAY BEACH FISH SCREEN
JETTY CREEK
CITY OF ROCKAWAY BEACH
CONSTRUCTION SPECIFICATIONS CONT'D

DATE: 1-19-2016
DESIGN BY: JMW
DRAWN BY: LWS
CHECKED BY:
NOTES:

FILE NO.
SHEET G4
OF

X:\PROJECT FOLDERS\BASIN 1 - NORTH COAST\S-01-0051 JETTY CREEK SCREEN\DESIGN\AUTOCAD FILES\JETTY_CREEK_G-SHEETS.DWG - Tuesday, January 19, 2016 9:01:47 AM -
11X17 PLOTTED AT HALF SCALE

STRUCTURAL STEEL

1 GENERAL

1.3 SUBMITTALS

A. SHOP DRAWINGS: SUBMIT SHOP DRAWINGS FOR APPROVAL 14 DAYS PRIOR TO BEGINNING FABRICATION. INCLUDE THE FOLLOWING INFORMATION ON SHOP DRAWINGS:
1. SIZES, SHAPES, WEIGHT OF EACH PIECE AND DIMENSION OF ALL MATERIALS USED.
2. FABRICATION DETAILS.
3. DETAILS OF ALL WELDED AND BOLTED CONNECTIONS.

B. CERTIFICATIONS: SUBMIT MILL TEST REPORTS CERTIFYING THE MATERIALS MEET THE REFERENCED ASTM SPECIFICATIONS:
1. STRUCTURAL SHAPES AND PLATES
2. BOLTS, NUTS AND WASHERS

C. SUBMIT WELDER CERTIFICATION PAPERS FOR ALL WELDERS DOING FIELD WELDING. SUBMIT LETTER FROM MANUFACTURER STATING ALL OFFSITE FABRICATION IS DONE BY CERTIFIED WELDERS.

D. SUBMIT REPORTS FROM SPECIAL INSPECTOR TO CONTRACTOR AND ENGINEER AS THEY ARE GENERATED.

1.4 QUALITY ASSURANCE

A. PROVIDE SPECIAL INSPECTION FOR ALL WELDING IN ACCORDANCE WITH IBC CHAPTER 17.

B. SPECIAL INSPECTION IS REQUIRED FOR ALL WELDING REGARDLESS OF WHETHER IT IS PERFORMED IN THE FIELD OR IN THE SHOP.

C. PROVIDE NON-DESTRUCTIVE TESTING FOR WELDED CONNECTIONS BETWEEN THE PRIMARY MEMBERS OF MOMENT FRAMES IN ACCORDANCE WITH IBC SECTION 1703. AS A MINIMUM THIS TESTING MUST INCLUDE:
1. PROVIDE ULTRASONIC TESTING FOR ALL COMPLETE PENETRATION GROOVE WELDS IN JOINTS AND SPLICES.
2. FOR COMPLETE PENETRATION GROOVE WELDS ON MATERIAL LESS THAN $\frac{5}{16}$" CONTINUOUS INSPECTION IS REQUIRED BUT ULTRASONIC TESTING IS NOT.

2 PRODUCTS

2.1 SHAPES AND PLATES

A. WIDE FLANGE BEAMS - ASTM A992, GRADE 50
B. CHANNELS, ANGLES AND PLATES - ASTM A36
C. COVER PLATES AT MOMENT CONNECTIONS - ASTM A572, GRADE 50 ENHANCED
D. STEEL TUBING - ASTM A500 GRADE B
E. PIPE: ASTM A53, GRADE B
F. FLOOR PLATE: ASTM A786: COMMERCIAL GRADE

2.2 CONNECTIONS

A. BOLTS, WASHERS, AND NUTS: UNLESS OTHERWISE NOTED ON THE PLANS:
1. FOR ALL STEEL TO STEEL CONNECTIONS - A325 (TYPE 1) WITH HEAVY HEX NUTS PER ASTM A563 GRADE DH
2. FOR STAINLESS STEEL BOLTS - ASTM F593
3. FOR STAINLESS STEEL NUTS - ASTM F594
4. FOR ALL STEEL TO WOOD CONNECTIONS - A307
5. MANUFACTURER'S SYMBOL AND GRADE MARKINGS MUST APPEAR ON BOLTS
6. FOR HARDENED FLAT WASHERS (HFW) - ASTM F436
7. FOR LOCK WASHERS - ASME B18.21.1
8. FOR DIRECT TENSION INDICATORS - ASTM F959

B. WELDING
1. WELDING ROD: E70XX PER ANSI/AWS D1.1
2. FOR COMPLETE PENETRATION GROOVE WELDS IN MOMENT FRAMES PROVIDE WELD MATERIAL MEETING THE REQUIREMENTS OF AISC 341.

C. ANCHOR RODS
1. ASTM F1554, GRADE 36 UNLESS OTHERWISE NOTED

D. THREADED RODS
1. ASTM A307 UNLESS OTHERWISE NOTED

E. FINISH
1. HOT-DIP GALVANIZING
(A). GALVANIZE ALL STEEL UNLESS OTHERWISE NOTED ON THE PLANS.
(B). GALVANIZE IN ACCORDANCE WITH ASTM A123/123M
2. EPOXY IMPREGNATED PAINT
(A). ON ALL PARTS AS INDICATED ON PLANS.
(B). COLOR: REQUEST FROM ENGINEER FOR FINAL COLOR.
3. POWDER COATING
(A). ON ALL PARTS INDICATED ON PLANTS.
(B). COLOR: REQUEST FROM ENGINEER FOR FINAL COLOR.

2.3 GALVANIZE FASTENERS IN ACCORDANCE WITH ASTM A153/153M, EXCEPT DTI.

3 EXECUTION

3.1 FABRICATION

A. FABRICATE ALL STRUCTURAL STEEL FABRICATIONS IN ACCORDANCE WITH:
1. THE CONTRACT DOCUMENTS

B. AISC AND AWS SPECIFICATIONS
1. APPROVED SHOP DRAWINGS

3.2 CAMBER

A. CAMBER ALL STEEL BEAMS TO THE CAMBERS SHOWN ON THE PLANS.

B. WHERE CAMBER IS NOT SHOWN PROVIDE CAMBER AS FOLLOWS:
1. DO NOT CAMBER ANY BEAMS SHORTER THAN 24 FEET UNLESS SPECIFICALLY REQUIRED ON THE PLANS.
2. PROVIDE CAMBER EQUAL TO SPAN/720.

3.3 DELIVERY AND STORAGE

A. STORE MATERIALS IN A CAREFUL AND WORKMANLIKE MANNER SO THAT DAMAGE TO THE MATERIALS EITHER FROM CORROSION OR LOADS IS AVOIDED.

B. STORE STRUCTURAL STEEL SHAPES ON DUNNAGE SO THEY ARE NOT IN CONTACT WITH DIRT OR STANDING WATER.

C. SUPPORT STRUCTURAL STEEL SHAPES SO THE ARE NOT BENT UNDER THEIR OWN WEIGHT OR THE WEIGHT OF OTHER MATERIALS.

D. STORE BOLTS AND OTHER FASTENERS IN WEATHER TIGHT CONTAINERS OR OTHERWISE PROTECTED FROM DIRT AND MOISTURE.
1. TAKE ONLY AS MANY FASTENER COMPONENTS AS ARE ANTICIPATED TO BE INSTALLED DURING THE WORK SHIFT FROM PROTECTED STORAGE.
2. RETURN ALL FASTENER COMPONENTS THAT ARE NOT INCORPORATED INTO THE WORK TO PROTECTED STORAGE AT THE END OF THE WORK SHIFT.
3. FASTENER COMPONENTS SHALL NOT BE CLEANED OR MODIFIED FROM THE AS-DELIVERED CONDITION.
4. FASTENER COMPONENTS THAT ACCUMULATE RUST OR DIRT SHALL NOT BE INCORPORATED INTO THE WORK UNLESS THEY ARE REQUALIFIED AS SPECIFIED IN SECTION 7 OF ASTM F1852.

E. STORE WELDING RODS IN ORIGINAL CONTAINERS OR IN ROD OVENS. RODS MUST BE KEPT DRY. WET RODS ARE NOT TO BE USED.

3.4 WELDING

A. ALL WELDING WHETHER IN FIELD OR SHOP MUST BE PERFORMED BY WELDERS CERTIFIED IN THE WELDS AND POSITIONS THAT ARE REQURIED BY THE PLANS.

B. CONFORM TO CURRENT AWS SPECIFICATIONS.

C. PROVIDE SPECIAL INSPECTION WHERE REQUIRED.

STRUCTURAL STEEL

3.5 BOLTING

A. ALL BOLTS MUST BE TIGHTENED TO THE SNUG-TIGHT CONDITION ONLY. PRE-TENSIONING IS NOT REQUIRED, OR DESIRED, UNLESS SPECIFICALLY NOTED ON THE DRAWINGS.

B. WHERE PRE-TENSIONING IS REQUIRED INSTALLATION MUST COMPLY WITH SECTION 8 OF THE RCSC SPECIFICATION AND INSPECTION MUST BE PROVIDED IN ACCORDANCE WITH SECTION 9 OF THE SAME SPECIFICATION.

C. WHERE PRE-TENSIONING IS REQUIRED THE CONTRACTOR SHALL FOLLOW THE METHOD LISTED BELOW:
1. DIRECT TENSION INDICATORS
a. COMPRESS PROTRUSIONS SO THE GAP MEASUREMES BETWEEN .005" AND .010".

D. OTHER METHODS OF PRE-TENSIONING ARE ALLOWED BUT PREAPPROVAL FROM THE ENGINEER MUST BE OBTAINED BEFORE FIELD USE.
1. TURN OF NUT TIGHTENING METHOD
2. TENSION CONTROL BOLTS
3. CALIBRATED WRENCH TIGHTENING

3.6 ERECTION

A. ERECT AND INSTALL STRUCTURAL STEEL AT THE LOCATIONS SHOWN ON THE PLANS.

B. THE ERECTOR IS SOLELY RESPONSIBLE FOR DETERMINING THE MEANS AND SEQUENCE OF ERECTION UNLESS SPECIFIC DIRECTIONS ARE NOTED ON THE PLANS.

C. MAKE NO FIELD MODIFICATIONS TO THE STRUCTURAL STEEL WITHOUT THE WRITTEN PERMISSION OF THE ENGINEER.

D. PROVIDE TEMPORARY BRACING AS REQUIRED TO MAINTAIN STRUCTURE IN PROPER ALIGNMENT UNTIL COMPLETION OF SUPPORTING STRUCTURE.

E. INSTALL GALVANIZED STRUCTURAL STEEL WITHOUT DAMAGE TO COATING. ANY DAMAGE TO STRUCTURAL STEEL SHALL BE REPAIRED BY STRIPPING COATING AND REDIPPING PIECE.

SCREEN MATERIALS

1 GENERAL

1.1 DESCRIPTION

A. WORK INCLUDED: ALL LABOR, MATERIALS, AND EQUIPMENT REQUIRED TO FABRICATE AND INSTALL THE FISH SCREEN AS INDICATED ON THE DRAWINGS.

1.2 REFERENCES

A. ASTM A240 - STANDARD SPECIFICATION FOR CHROMIUM AND CHROMIUM-NICKEL STAINLESS STEEL PLATE, SHEET, AND STRIP FOR PRESSURE VESSELS AND FOR GENERAL APPLICATIONS

B. ASTM D785 - STANDARD TEST METHOD FOR ROCKWELL HARDNESS OF PLASTICS AND ELECTRICAL INSULATING MATERIALS

1.3 SUBMITTALS

A. NONE REQUIRED

2 PRODUCTS

2.1 MATERIALS

A. SCREEN PANELS: SCREEN PANELS SHALL BE MADE OF ANY OF THE FOLLOWING TYPES. SEE PLANS FOR SPECIFIC MATERIAL
1. STAINLESS STEEL PERFORATED PLATE
(A). $\frac{3}{32}$"ø HOLES STAGGER SPACED AT $\frac{5}{32}$" OC
(B). ASTM A240 GRADE 304 STAINLESS STEEL
2. STAINLESS STEEL PROFILE BAR PANELS
(A). .069" OPENINGS
(B). ASTM A GRADE 304 STAINLESS STEEL
(C). PROVIDE HENDRICK SCREEN OR EQUAL
3. COPPER-NICKEL PROFILE BAR PANELS
(A). .069" OPENINGS
(B). ASTM A COPPER-NICKEL STEEL
(C). PROVIDE HENDRICK SCREEN OR EQUAL

B. ULTRA-HIGH MOLECULAR WEIGHT PLASTIC (UHMW)
1. HARDNESS
(A). HARDNESS VALUE OF D62 OR HIGHER PER ASTM A785
2. COEFFECIENT OF FRICTION AGAINST STEEL
(A). LESS THAN .20

C. STEEL FRAME
1. MATERIALS USED IN STEEL FRAME ARE SPECIFIED UNDER THE STRUCTURAL STEEL SECTION.

D. STRIP BRUSH
1. STRIP BRUSHES SHALL CONFORM TO THE FOLLOWING REQUIREMENTS:
(A). MATERIAL: NYLON
(B). BRISTLE DIAMETER: 0.045"
(C). SPINE WIDTH: $\frac{7}{16}$"

E. BAFFLE BEARING
1. BAFFLE BEARING SHALL CONFORM TO THE FOLLOWING REQUIREMENTS:
(A). MATERIAL: UHMW
(B). TYPE: SLEEVE BEARING
(C). INSIDE & OUTSIDE DIAMETER: AS SPECIFIED ON DRAWING
(D). LENGTH: AS SPECIFIED ON DRAWING

F. COMPRESSION SPRING
1. COMPRESSION SPRING SHALL CONFORM TO THE FOLLOWING REQUIREMENTS:
(A). MATERIAL: STAINLESS STEEL GRADE 302
(B). INSIDE & OUTSIDE DIAMETER: AS SPECIFIED ON DRAWING
(C). LENGTH: AS SPECIFIED ON DRAWING

G. RUBBER BACKING
1. RUBBER BACKING SHALL CONFORM TO THE FOLLOWING REQUIREMENTS:
(A). MATERIAL: FOAM RUBBER
(B). INSIDE & OUTSIDE DIAMETER: AS SPECIFIED ON DRAWING
(C). LENGTH: AS SPECIFIED ON DRAWING

3 EXECUTION

3.1 FABRICATION

A. FABRICATE ALL SCREEN PARTS IN ACCORDANCE WITH THE CONTRACT DOCUMENTS.

B. ANY DISCREPENCIES FOUND DURING CONSTRUCTION SHALL BE BROUGHT TO THE ATTENTION OF THE ENGINEER. DISCONTINUE ALL WORK AFFECTED BY THE DISCREPENCY UNTIL SUCH TIME AS THE ENGINEER HAS PROVIDED A SOLUTION. WORK CAN CONTINUE FOR ITEMS OF THE PROJECT NOT AFFECTED BY THE DISCREPENCY.

C. VERIFY CRITICAL DIMENSION(S) FOR FITTING THE SCREEN STRUCTURE INTO THE CONCRETE/STEEL SUPPORT BOX PRIOR TO DELIVERY OF THE SCREEN TO THE SITE.

SCREEN MATERIALS CONT'D

3.2 DELIVERY AND STORAGE

A. STORE MATERIALS IN A CAREFUL AND WORKMANLIKE MANNER SO THAT DAMAGE TO THE MATERIALS EITHER FROM CORROSION OR LOADS IS AVOIDED.

B. STORE STRUCTURAL STEEL SHAPES ON DUNNAGE SO THEY ARE NOT IN CONTACT WITH DIRT OR STANDING WATER.

C. SUPPORT STRUCTURAL STEEL SHAPES SO THE ARE NOT BENT UNDER THEIR OWN WEIGHT OR THE WEIGHT OF OTHER MATERIALS.

D. STORE BOLTS AND OTHER FASTENERS IN WEATHER TIGHT CONTAINERS OR OTHERWISE PROTECTED FROM DIRT AND MOISTURE.
1. TAKE ONLY AS MANY FASTENER COMPONENTS AS ARE ANTICIPATED TO BE INSTALLED DURING THE WORK SHIFT FROM PROTECTED STORAGE.
2. RETURN ALL FASTENER COMPONENTS THAT ARE NOT INCORPORATED INTO THE WORK TO PROTECTED STORAGE AT THE END OF THE WORK SHIFT.
3. FASTENER COMPONENTS SHALL NOT BE CLEANED OR MODIFIED FROM THE AS-DELIVERED CONDITION.
4. FASTENER COMPONENTS THAT ACCUMULATE RUST OR DIRT SHALL NOT BE INCORPORATED INTO THE WORK UNLESS THEY ARE REQUALIFIED AS SPECIFIED IN SECTION 7 OF ASTM F1852.

E. STORE WELDING RODS IN ORIGINAL CONTAINERS OR IN ROD OVENS. RODS MUST BE KEPT DRY. WET RODS ARE NOT TO BE USED.

F. STORE PLASTIC PIECES OUT OF DIRECT SUNLIGHT AND HEAT OVER 100°F

3.3 BOLTING

A. ALL BOLTS MUST BE TIGHTENED TO THE SNUG-TIGHT CONDITION ONLY. PRE-TENSIONING IS NOT REQUIRED, OR DESIRED, UNLESS SPECIFICALLY NOTED ON THE DRAWINGS.

3.4 ERECTION

A. ERECT AND INSTALL STRUCTURAL STEEL AT THE LOCATIONS SHOWN ON THE PLANS.

B. THE ERECTOR IS SOLELY RESPONSIBLE FOR DETERMINING THE MEANS AND SEQUENCE OF ERECTION UNLESS SPECIFIC DIRECTIONS ARE NOTED ON THE PLANS.

C. MAKE NO FIELD MODIFICATIONS TO THE STRUCTURAL STEEL WITHOUT THE WRITTEN PERMISSION OF THE ENGINEER.

D. PROVIDE TEMPORARY BRACING AS REQUIRED TO MAINTAIN STRUCTURE IN PROPER ALIGNMENT UNTIL COMPLETION OF SUPPORTING STRUCTURE.

E. INSTALL GALVANIZED STRUCTURAL STEEL WITHOUT DAMAGE TO COATING. ANY DAMAGE TO STRUCTURAL STEEL SHALL BE REPAIRED BY STRIPPING COATING AND REDIPPING PIECE.

F. INSTALL SCREEN PANELS AFTER STRUCTURAL STEEL HAS BEEN ADEQUATELY FASTENED TO WALLS/FLOOR.

POWER TRANSMISSION

1 GENERAL

1.1 DESCRIPTION

A. WORK INCLUDED: ALL LABOR, MATERIALS, AND EQUIPMENT REQUIRED TO FABRICATE AND INSTALL THE POWER TRANSMISSION SYSTEM TO RUN THE FISH SCREEN CLEANING MECHANISM.

1.2 SUBMITTALS

A. NONE REQUIRED

2 PRODUCTS

2.1 MATERIALS

A. SPROCKETS
1. DRIVE SPROCKETS
(A). MATERIAL: CARBON STEEL
(B). PROVIDE MCMASTER-CARR PARTS OR EQUAL
(C). PROVIDES SIZES AS REQUIRED PER DRAWING
2. IDLER SPROCKETS
(A). MATERIAL: CARBON STEEL
(B). PROVIDE MCMASTER-CARR PARTS OR EQUAL
(C). PROVIDE SIZES AS REQUIRED PER DRAWING

B. ROLLER CHAIN
1. MATERIAL: STAINLESS STEEL GRADE 304
2. PROVIDE SIZE AS REQUIRED PER DRAWING

C. TYPE D UNIVERSAL JOINT
1. MATERIAL: STAINLESS STEEL GRADE 303
2. PROVIDE SIZE AS REQUIRED PER DRAWING

D. GEAR BOXES
1. 90° TURN
(A). SPEED RATIO: 1 TO 1
(B). OUTPUT TORQUE CAPACITY: 75 IN*LB
2. INLINE REDUCTION: NONE REQUIRED
3. STEEL SUPPORT FRAME
1. STEEL MATERIALS ARE SPECIFIED IN THE STRUCTURAL STEEL SECTION

3 EXECUTION

3.1 FABRICATION

A. FABRICATE ALL POWER TRANSMISSION PARTS IN ACCORDANCE WITH THE CONTRACT DOCUMENTS.

B. ANY DISCREPENCIES FOUND DURING CONSTRUCTION SHALL BE BROUGHT TO THE ATTENTION OF THE ENGINEER. DISCONTINUE ALL WORK AFFECTED BY THE DISCREPENCY UNTIL SUCH TIME AS THE ENGINEER HAS PROVIDED A SOLUTION. WORK CAN CONTINUE FOR ITEMS OF THE PROJECT NOT AFFECTED BY THE DISCREPENCY.

C. VERIFY CRITICAL DIMENSION(S) FOR FITTING THE POWER TRANSMISSION PARTS TOGETHER AND PLACEMENT OF THE POWER TRANSMISSION ASSEMBLY ONTO THE CONCRETE/STEEL SUPPORT BOX PRIOR TO DELIVERY OF THE SCREEN TO THE SITE.

3.2 DELIVERY AND STORAGE

A. STORE MATERIALS IN A CAREFUL AND WORKMANLIKE MANNER SO THAT DAMAGE TO THE MATERIALS EITHER FROM CORROSION OR LOADS IS AVOIDED.

B. STORE STRUCTURAL STEEL SHAPES ON DUNNAGE SO THEY ARE NOT IN CONTACT WITH DIRT OR STANDING WATER.

C. SUPPORT STRUCTURAL STEEL SHAPES SO THE ARE NOT BENT UNDER THEIR OWN WEIGHT OR THE WEIGHT OF OTHER MATERIALS.

D. STORE BOLTS AND OTHER FASTENERS IN WEATHER TIGHT CONTAINERS OR OTHERWISE PROTECTED FROM DIRT AND MOISTURE.
1. TAKE ONLY AS MANY FASTENER COMPONENTS AS ARE ANTICIPATED TO BE INSTALLED DURING THE WORK SHIFT FROM PROTECTED STORAGE.
2. RETURN ALL FASTENER COMPONENTS THAT ARE NOT INCORPORATED INTO THE WORK TO PROTECTED STORAGE AT THE END OF THE WORK SHIFT.
3. FASTENER COMPONENTS SHALL NOT BE CLEANED OR MODIFIED FROM THE AS-DELIVERED CONDITION.
4. FASTENER COMPONENTS THAT ACCUMULATE RUST OR DIRT SHALL NOT BE INCORPORATED INTO THE WORK UNLESS THEY ARE REQUALIFIED AS SPECIFIED IN SECTION 7 OF ASTM F1852.

E. STORE WELDING RODS IN ORIGINAL CONTAINERS OR IN ROD OVENS. RODS MUST BE KEPT DRY. WET RODS ARE NOT TO BE USED.

F. STORE PLASTIC PIECES OUT OF DIRECT SUNLIGHT AND HEAT OVER 100°F

POWER TRANSMISSION CONT'D

3.3 BOLTING

A. ALL BOLTS MUST BE TIGHTENED TO THE SNUG-TIGHT CONDITION ONLY. PRE-TENSIONING IS NOT REQUIRED, OR DESIRED, UNLESS SPECIFICALLY NOTED ON THE DRAWINGS.

3.4 ERECTION

A. ERECT AND INSTALL STRUCTURAL SUPPORT STEEL AT THE LOCATIONS SHOWN ON THE PLANS.

B. THE ERECTOR IS SOLELY RESPONSIBLE FOR DETERMINING THE MEANS AND SEQUENCE OF ERECTION UNLESS SPECIFIC DIRECTIONS ARE NOTED ON THE PLANS.

C. MAKE NO FIELD MODIFICATIONS TO THE STRUCTURAL STEEL WITHOUT THE WRITTEN PERMISSION OF THE ENGINEER.

D. PROVIDE TEMPORARY BRACING AS REQUIRED TO MAINTAIN STRUCTURE IN PROPER ALIGNMENT UNTIL COMPLETION OF SUPPORTING STRUCTURE.

E. INSTALL POWER TRANSMISSION ASSEMBLY AFTER STRUCTURAL SUPPORT STEEL HAS BEEN ADEQUATELY FASTENED TO WALLS/FLOOR.

PRELIMINARY NOT FOR CONSTRUCTION

Oregon
DEPARTMENT OF FISH AND WILDLIFE
FISH DIVISION
FISH SCREENING AND PASSAGE PROGRAM
4034 FAIRVIEW INDUSTRIAL DR. S.E.
SALEM, OREGON 97302
PHONE: (503) 947-6234 FAX: (503) 947-6203

REV.	DATE	DESCRIPTION

CITY OF ROCKAWAY BEACH FISH SCREEN
JETTY CREEK
CITY OF ROCKAWAY BEACH

CONSTRUCTION SPECIFICATIONS CONT'D

DATE: 1-19-2016
DESIGN BY: JMW
DRAWN BY: LWS
CHECKED BY:
NOTES:

FILE NO.

SHEET G5
OF

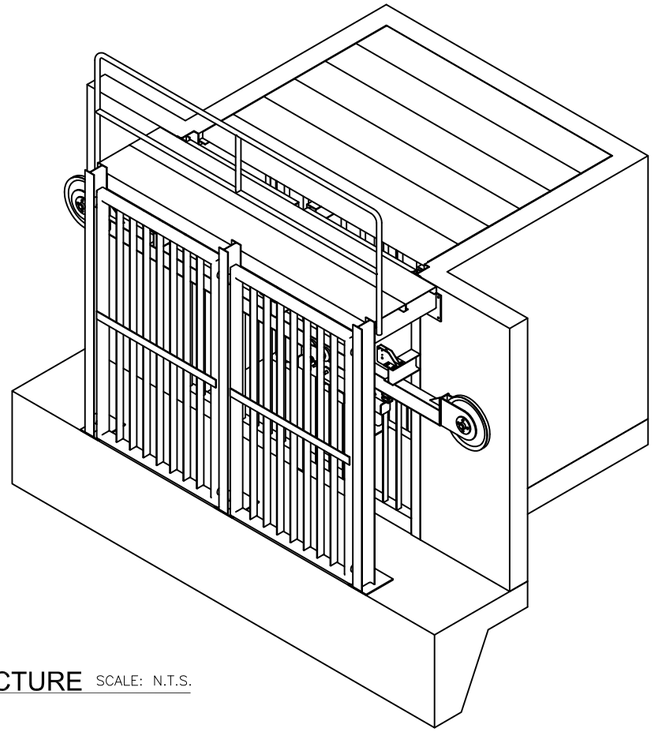

1 G6 ISOMETRIC VIEW
SCREEN STRUCTURE SCALE: N.T.S.

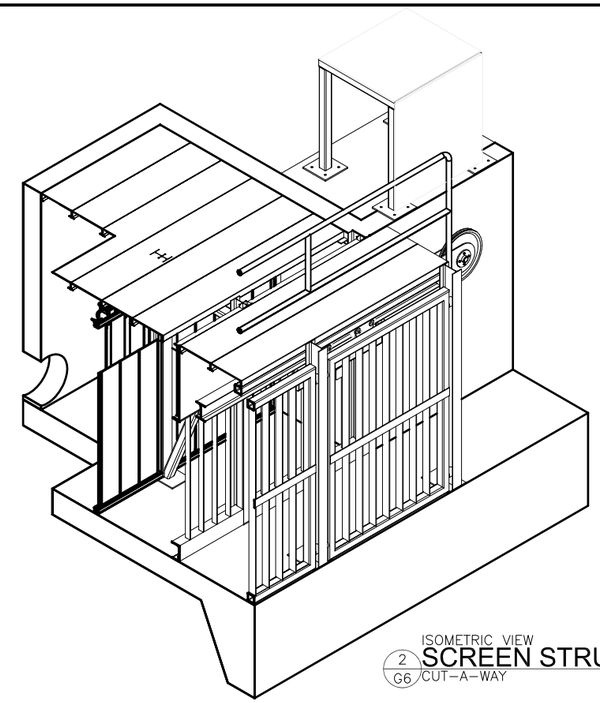

2 G6 ISOMETRIC VIEW
SCREEN STRUCTURE SCALE: N.T.S.
CUT-A-WAY

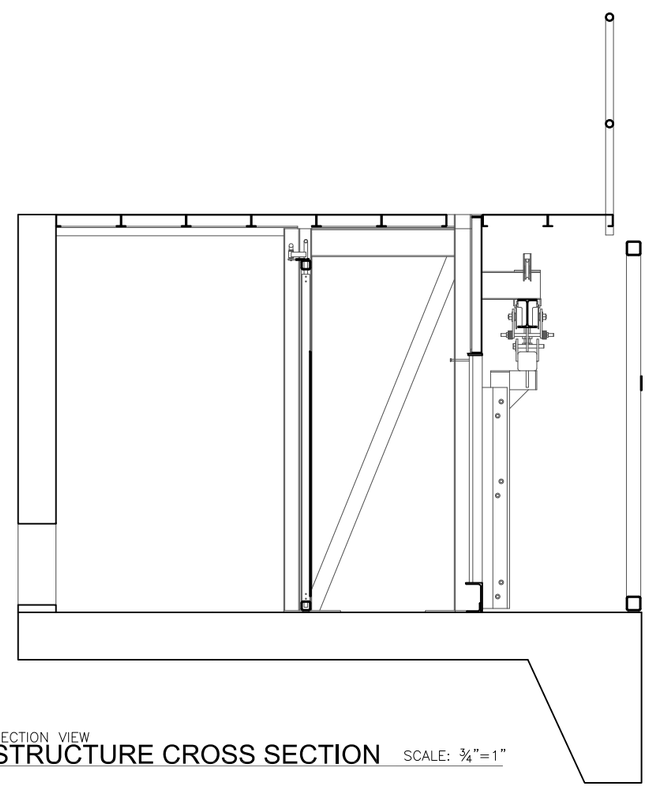

3 G6 SECTION VIEW
STRUCTURE CROSS SECTION SCALE: ¾"=1"

PRELIMINARY
NOT FOR
CONSTRUCTION

Oregon
DEPARTMENT OF FISH AND WILDLIFE
FISH DIVISION
FISH SCREENING AND PASSAGE PROGRAM
4034 FAIRVIEW INDUSTRIAL DR. S.E.
SALEM, OREGON 97302
PHONE: (503) 947-6234 FAX: (503) 947-6203

OREGON Fish & Wildlife

REV.	DATE	DESCRIPTION

CITY OF ROCKAWAY BEACH FISH SCREEN
JETTY CREEK
ROCKAWAY BEACH, OR

DATE: 1-19-2016
DESIGN BY: JMW
DRAWN BY: LWS
CHECKED BY:
NOTES:

FILE NO. S-01-0051
SHEET G6
OF

X:\PROJECT FOLDERS\BASIN 1 - NORTH COAST\S-01-0051 JETTY CREEK SCREEN\DESIGN\AUTOCAD FILES\JETTY_CREEK_M-SHEETS.DWG - Tuesday, January 19, 2016 9:02:00 AM -
11X17 PLOTTED AT HALF SCALE

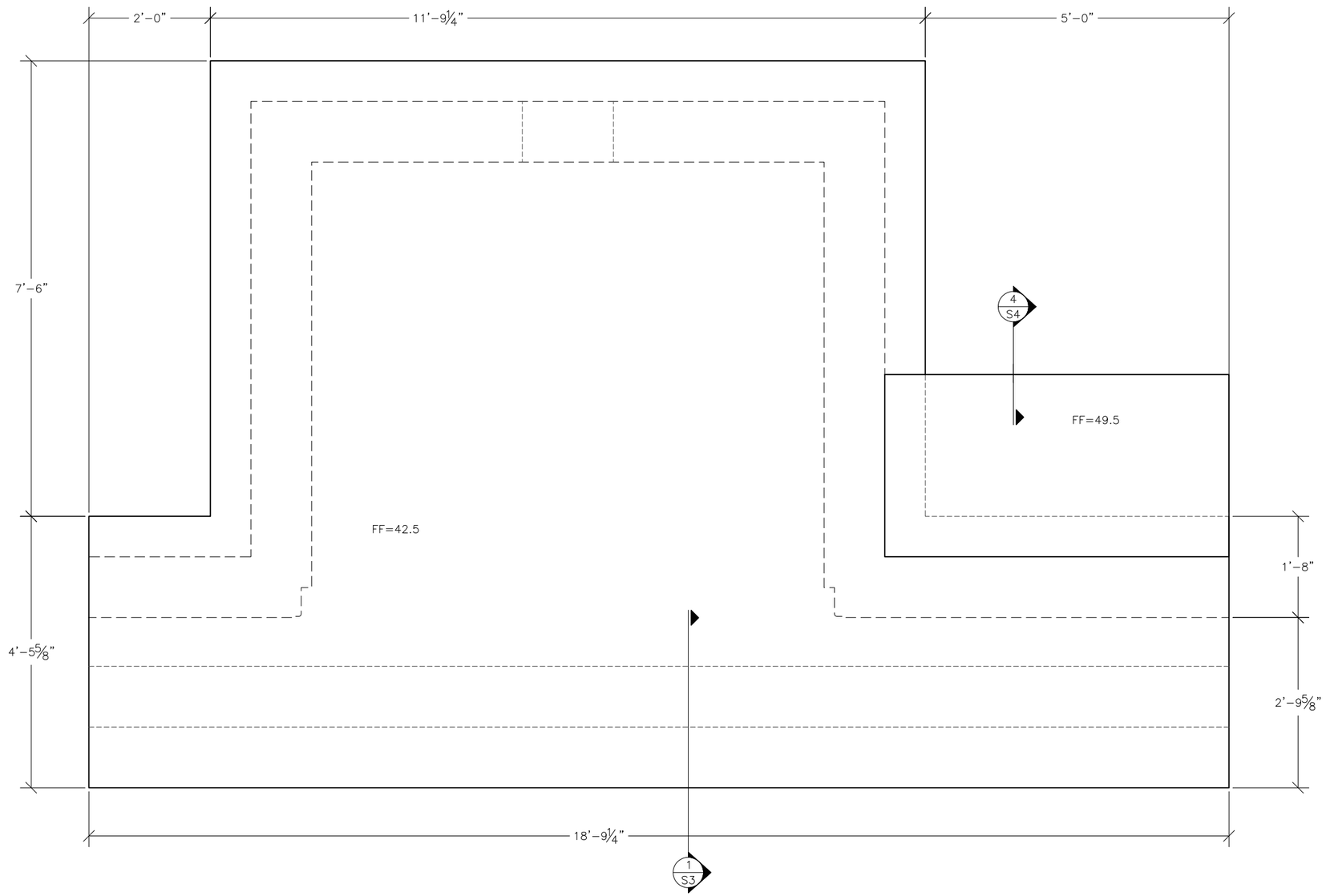

1 S1 PLAN VIEW
FOUNDATION LAYOUT SCALE: 1"=1'-0"

PRELIMINARY
NOT FOR
CONSTRUCTION

Oregon
DEPARTMENT OF FISH AND WILDLIFE
FISH DIVISION
FISH SCREENING AND PASSAGE PROGRAM
4034 FAIRVIEW INDUSTRIAL DR. S.E.
SALEM, OREGON 97302
PHONE: (503) 947-6234 FAX: (503) 947-6203

REV.	DATE	DESCRIPTION

CITY OF ROCKAWAY BEACH FISH SCREEN
JETTY CREEK
ROCKAWAY BEACH, OR
FOUNDATION LAYOUT

DATE: 1-19-2016
DESIGN BY: JMW
DRAWN BY: LWS
CHECKED BY:
NOTES:

FILE NO. S-01-0051
SHEET S1
OF

X:\PROJECT FOLDERS\BASIN 1 - NORTH COAST\S-01-0051 JETTY CREEK SCREEN\DESIGN\AUTOCAD FILES\JETTY_CREEK_S-SHEETS.DWG - Tuesday, January 19, 2016 9:02:07 AM -
11X17 PLOTTED AT HALF SCALE

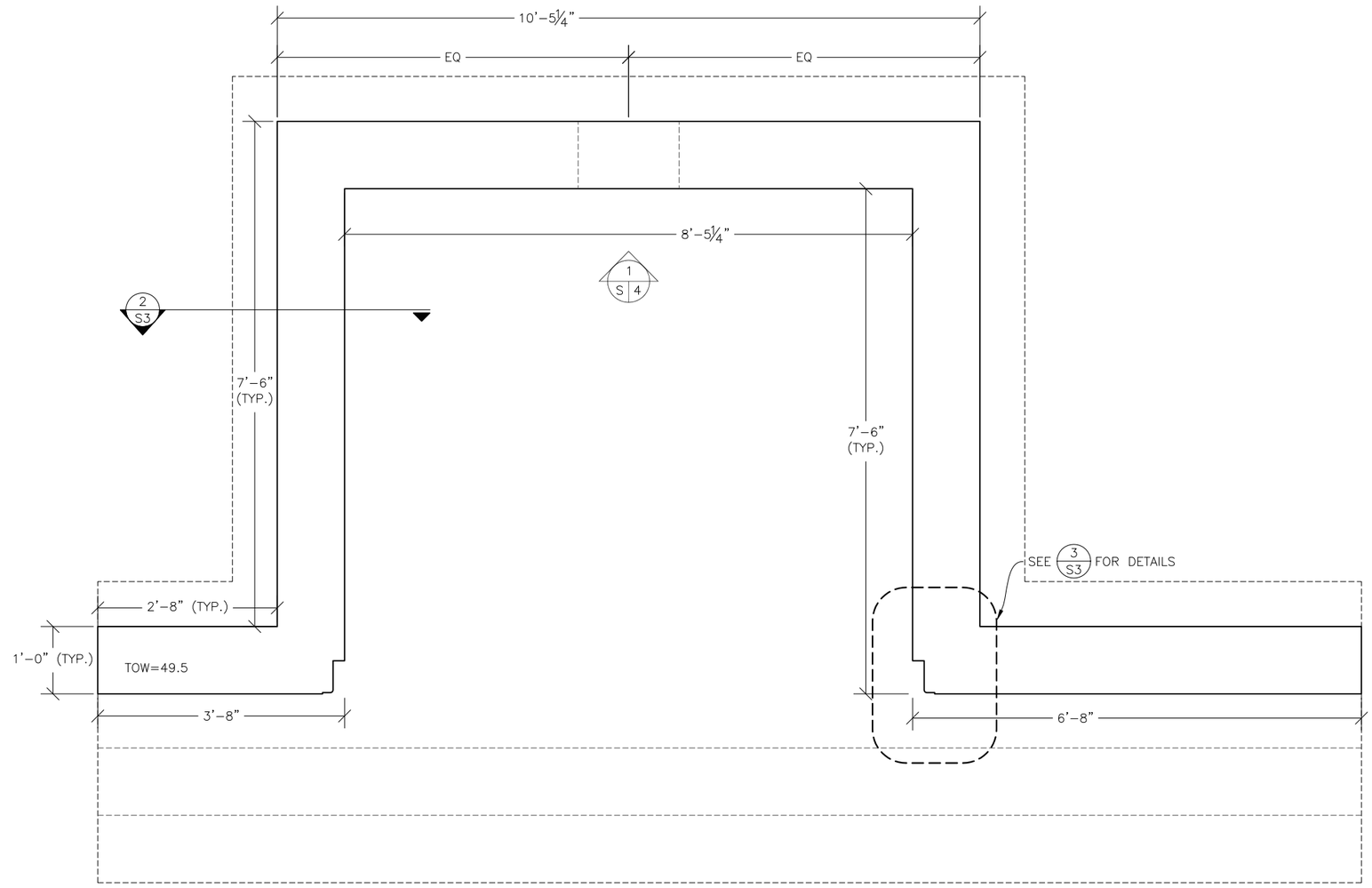

1/S2 PLAN VIEW
WALL LAYOUT SCALE: 1'=1'-0"

PRELIMINARY
NOT FOR
CONSTRUCTION

Oregon
DEPARTMENT OF FISH AND WILDLIFE
FISH DIVISION
FISH SCREENING AND PASSAGE PROGRAM
4034 FAIRVIEW INDUSTRIAL DR. S.E.
SALEM, OREGON 97302
PHONE: (503) 947-6234 FAX: (503) 947-6203

REV.	DATE	DESCRIPTION

CITY OF ROCKAWAY BEACH FISH SCREEN
JETTY CREEK
ROCKAWAY BEACH, OR
WALL LAYOUT

DATE: 1-19-2016
DESIGN BY: JMW
DRAWN BY: LWS
CHECKED BY:
NOTES:

FILE NO. S-01-0051
SHEET S2
OF

X:\PROJECT FOLDERS\BASIN 1 - NORTH COAST\S-01-0051 JETTY CREEK SCREEN\DESIGN\AUTOCAD FILES\JETTY_CREEK_S-SHEETS.DWG - Tuesday, January 19, 2016 9:02:11 AM -
11X17 PLOTTED AT HALF SCALE

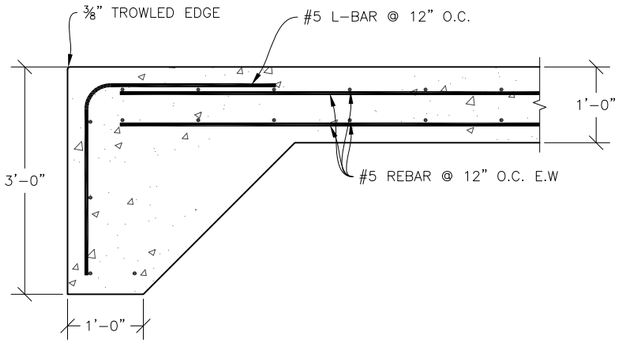

SECTION VIEW
1/S3 CUTOFFWALL AND FLOOR SCALE: 1"=1'-0"

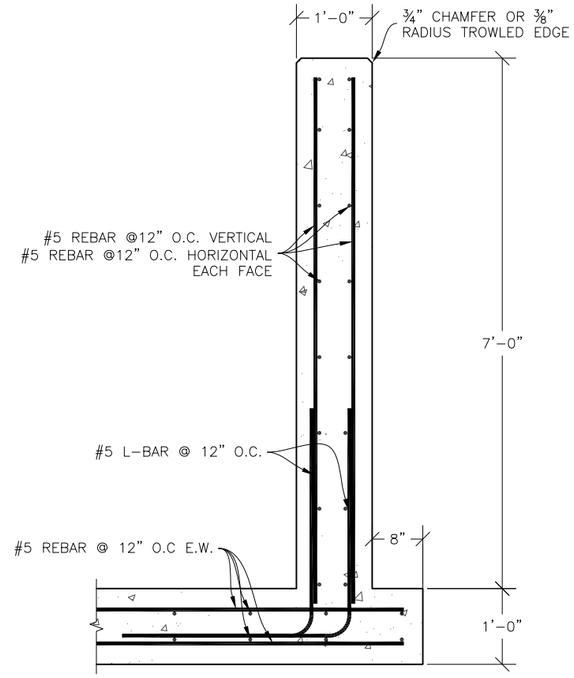

SECTION VIEW
2/S3 TYPICAL WALL SCALE: 1"=1'-0"

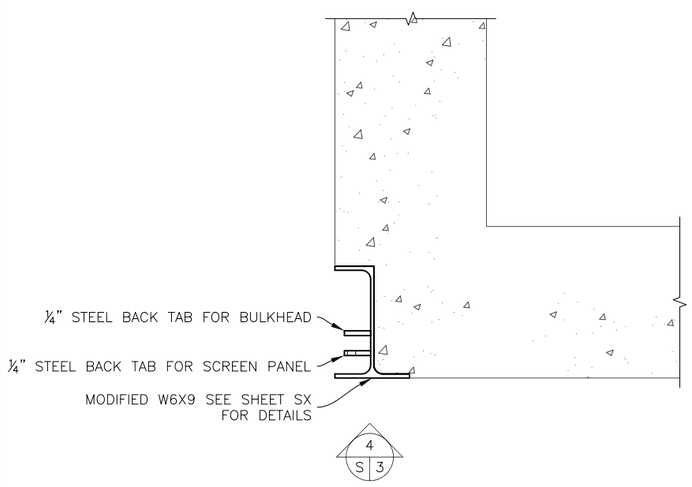

PLAN VIEW
3/S3 SCREEN EMBED SCALE: 1"=1'-0"

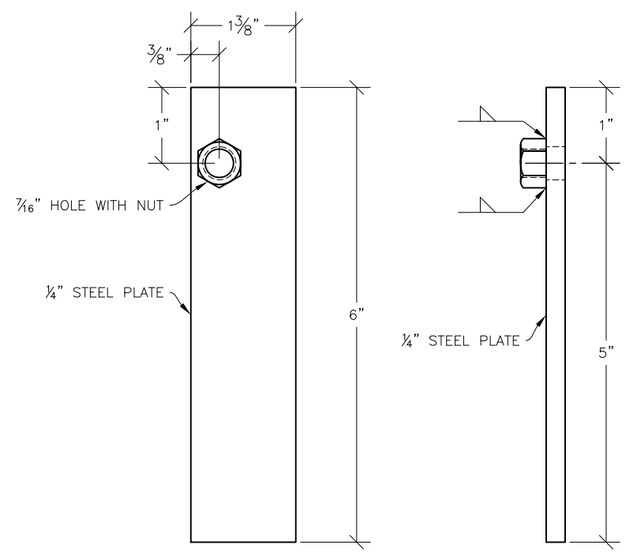

FRONT VIEW
4/S3 BACK TAB FOR SCREEN PANEL SCALE: 1"=1"

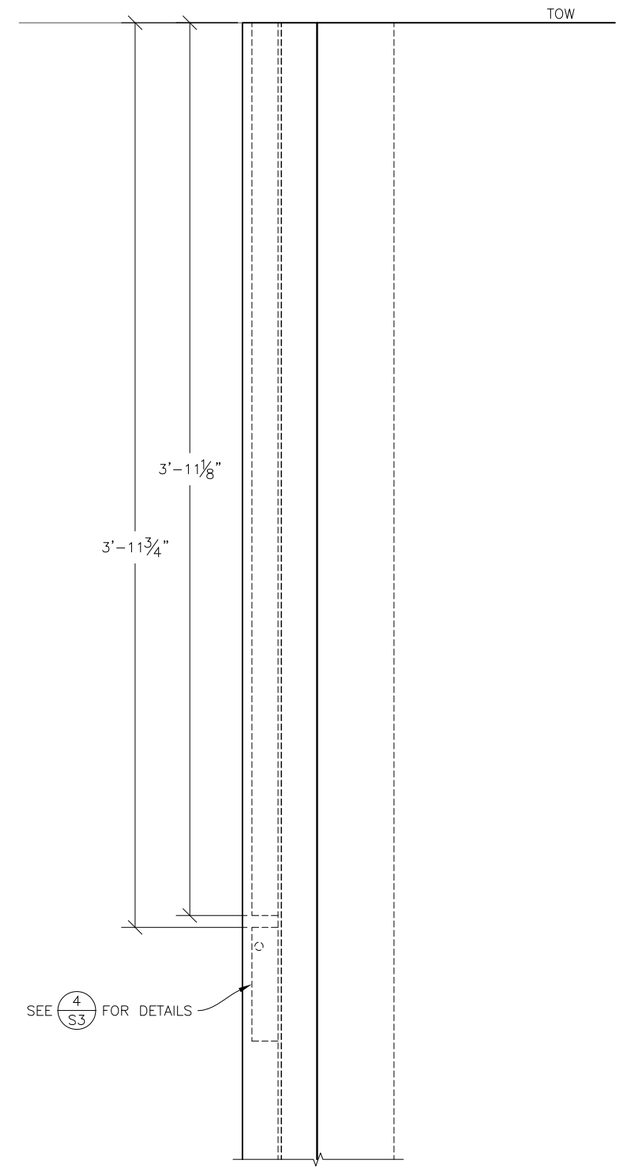

ELEVATION VIEW
5/S3 SCREEN EMBED SCALE: ¼"=1"

PRELIMINARY
NOT FOR
CONSTRUCTION

Oregon
DEPARTMENT OF FISH AND WILDLIFE
FISH DIVISION
FISH SCREENING AND PASSAGE PROGRAM
4034 FAIRVIEW INDUSTRIAL DR. S.E.
SALEM, OREGON 97302
PHONE: (503) 947-6234 FAX: (503) 947-6203

REV.	DATE	DESCRIPTION

CITY OF ROCKAWAY BEACH FISH SCREEN
JETTY CREEK
ROCKAWAY BEACH, OR

WALL, FOUNDATION SECTIONS AND SCREEN EMBED DETAILS

DATE: 1-19-2016
DESIGN BY: JMW
DRAWN BY: LWS
CHECKED BY:
NOTES:

FILE NO. S-01-0051
SHEET S3
OF

X:\PROJECT FOLDERS\BASIN 1 - NORTH COAST\S-01-0051 JETTY CREEK SCREEN\DESIGN\AUTOCAD FILES\JETTY_CREEK_S-SHEETS.DWG - Tuesday, January 19, 2016 9:02:13 AM -
11X17 PLOTTED AT HALF SCALE

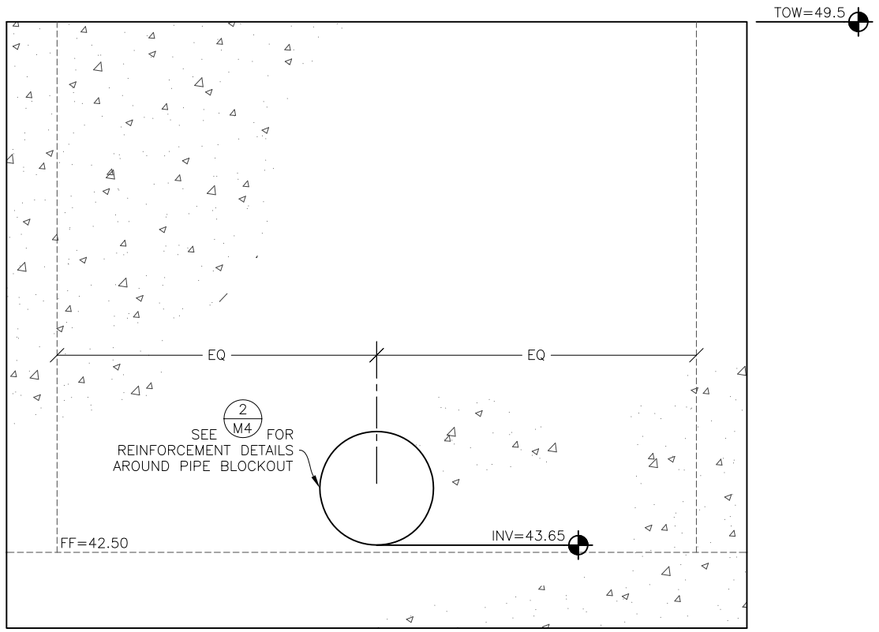

ELEVATION VIEW
1/S4 CONVEYANCE PIPE SCALE: 1"=1'-0"

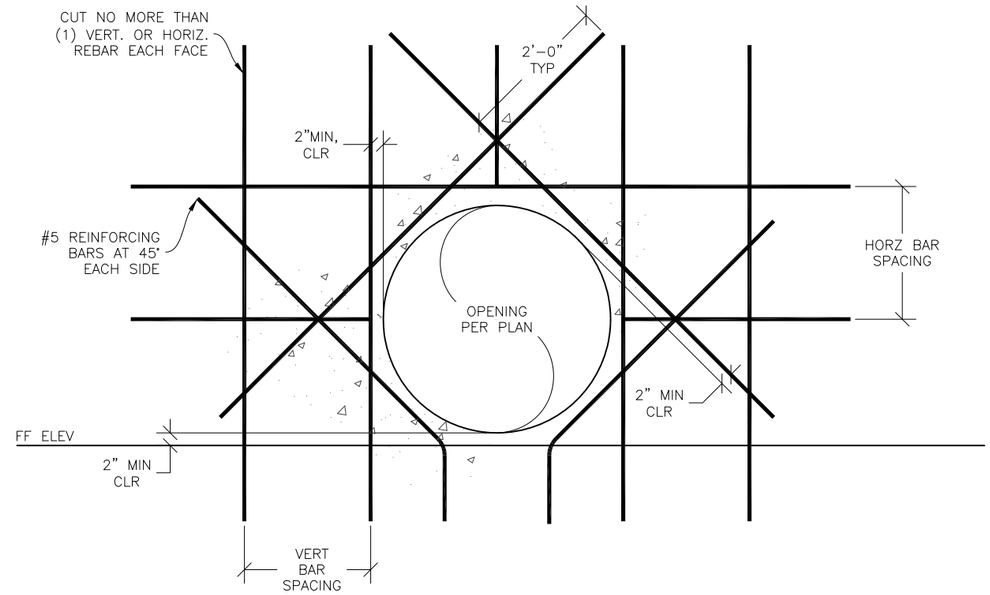

FOR HOLES W/ DIA. > 1.5x BAR SPACE

NOTES:
1. PROVIDE (4) REINFORCING BARS FOR WALLS W/ ONE MAT OF REBAR & (4) REINFORCING BARS EA. FACE FOR WALLS W/ TWO MATS OF REBAR.
2. REFER TO GENERAL NOTES FOR REBAR CLEARANCE REQUIREMENTS. REFER TO OTHER DETAILS FOR REBAR SIZE AND SPACING. BAR SPACING REFERS TO THE LESSER OF THE VERT. OR HORIZ BAR SPACING. DETAIL IS SIMILAR FOR SLAB LOCATIONS.

DETAIL
2/S4 REBAR AT CIRCULAR OPENING SCALE: 1"=1'-0"

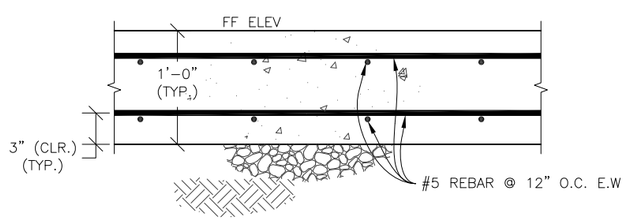

SECTION VIEW
3/S4 TYPICAL FLOOR SECTIONS SCALE: ⅛"=1"
12IN FLOOR SECTION

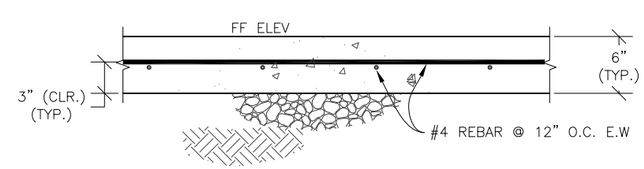

SECTION VIEW
4/S4 TYPICAL FLOOR SECTIONS SCALE: ⅛"=1"
6IN FLOOR SECTION

PRELIMINARY
NOT FOR
CONSTRUCTION

Oregon
DEPARTMENT OF FISH AND WILDLIFE
FISH DIVISION
FISH SCREENING AND PASSAGE PROGRAM
4034 FAIRVIEW INDUSTRIAL DR. S.E.
SALEM, OREGON 97302
PHONE: (503) 947-6234 FAX: (503) 947-6203

REV.	DATE	DESCRIPTION

CITY OF ROCKAWAY BEACH FISH SCREEN
JETTY CREEK
ROCKAWAY BEACH, OR

CIRCULAR BLOCKOUT AND
REINFORCEMENT DETAIL

DATE: 1-19-2016
DESIGN BY: JMW
DRAWN BY: LWS
CHECKED BY:
NOTES:

FILE NO. S-01-0051
SHEET S4
OF

X:\PROJECT FOLDERS\BASIN 1 - NORTH COAST\S-01-0051 JETTY CREEK SCREEN\DESIGN\AUTOCAD FILES\JETTY_CREEK_S-SHEETS.DWG - Tuesday, January 19, 2016 9:02:16 AM -
11X17 PLOTTED AT HALF SCALE

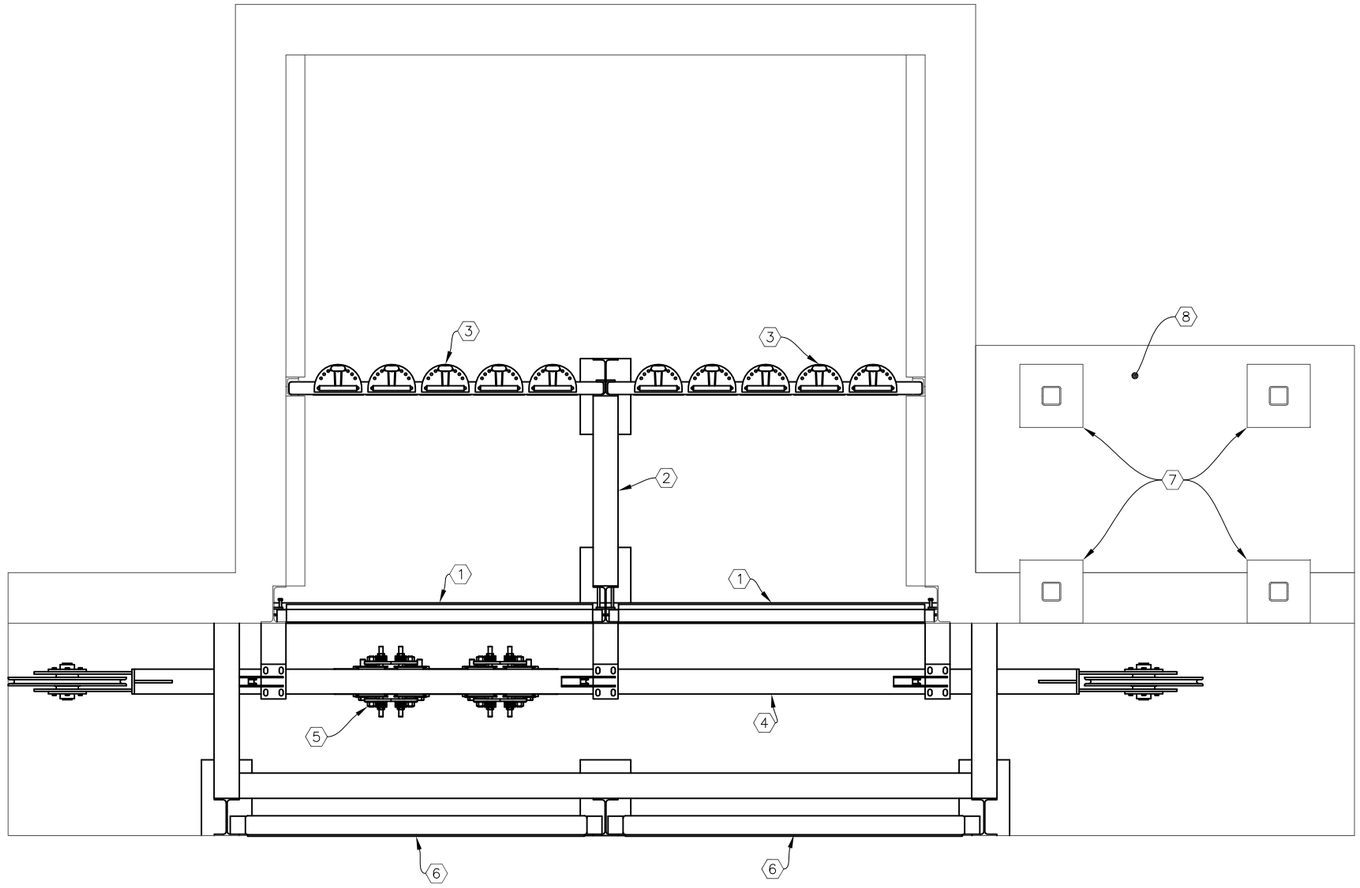

PLAN VIEW

1/M1 SCREEN STRUCTURE LAYOUT SCALE: 1"=1'-0"

SHEET M1 NOTES:

1. SCREEN AND BULKHEAD LAYOUT AND DETAILS SEE SHEETS M2
2. WALKWAY, SCREEN, AND BAFFLE GUIDE FRAME, SEE SHEETS M3 FOR LAYOUT AND DETAILS
3. BAFFLE ASSEMBLY SEE M6 FOR LAYOUT AND DETAILS
4. TROLLEY BEAM LAYOUT AND DETAILS SEE SHEET M3
5. BRUSH CARRIAGE SEE SHEET M7-M8 FOR LAYOUT AND DETAILS
6. TRASH RACK SEE SHEET M9 FOR LAYOUT AND DETAILS
7. CLEANING SYSTEM DRIVE STAND SEE SHEET M12 FOR DETAILS
8. 6" THICK CONCRETE SLAB, MATCH TOP OF WALL HEIGHT OF WALLS

* WALKWAY AND HANDRAIL NOT SHOWN FOR CLARITY, SEE SHEETS M10 FOR LAYOUT AND DETAILS.

PRELIMINARY
NOT FOR
CONSTRUCTION

Oregon
DEPARTMENT OF FISH AND WILDLIFE
FISH DIVISION
FISH SCREENING AND PASSAGE PROGRAM
4034 FAIRVIEW INDUSTRIAL DR. S.E.
SALEM, OREGON 97302
PHONE: (503) 947-6234 FAX: (503) 947-6203

REV.	DATE	DESCRIPTION

CITY OF ROCKAWAY BEACH FISH SCREEN
JETTY CREEK
ROCKAWAY BEACH, OR

SCREEN LAYOUT

DATE: 1-19-2016
DESIGN BY: JMW
DRAWN BY: LWS
CHECKED BY:
NOTES:

FILE NO. S-01-0051

SHEET M1
OF

X:\PROJECT FOLDERS\BASIN 1 - NORTH COAST\S-01-0051 JETTY CREEK SCREEN\DESIGN\AUTOCAD FILES\JETTY_CREEK_M-SHEETS.DWG - Tuesday, January 19, 2016 9:02:20 AM -
11X17 PLOTTED AT HALF SCALE

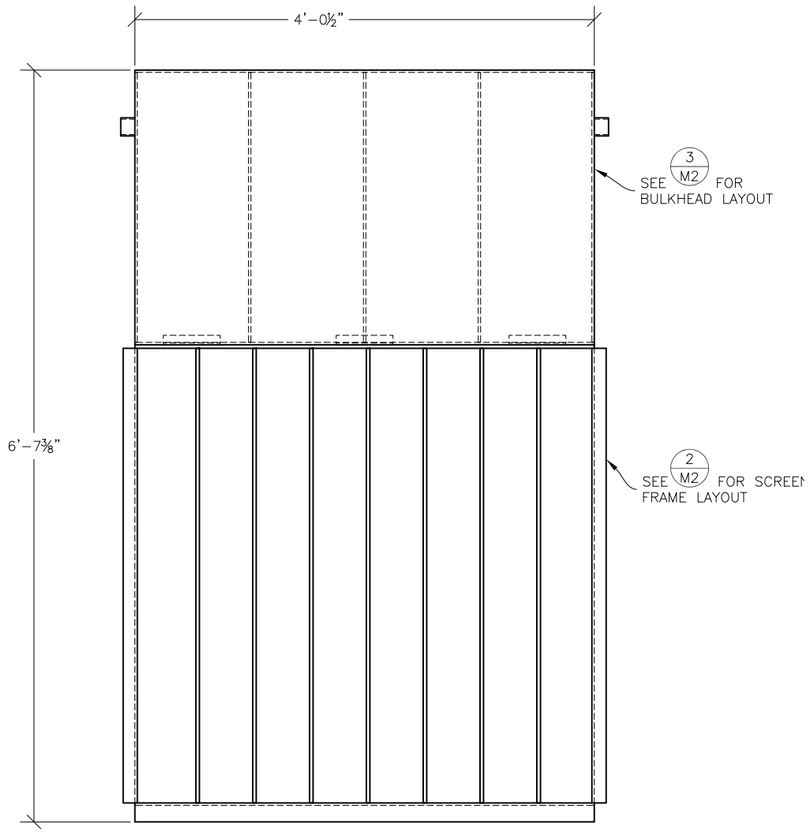

FRONT VIEW
1/M2 SCREEN FRAME AND BULKHEAD SCALE: ⅛"=1"

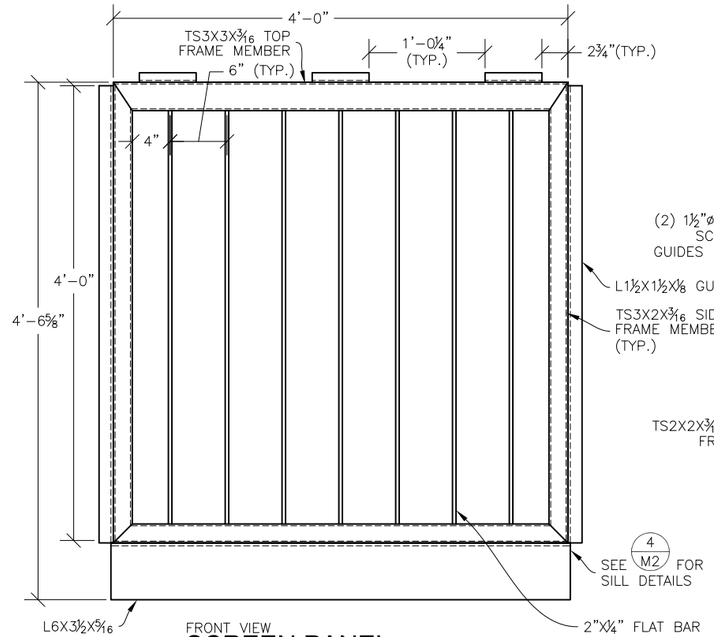

FRONT VIEW
2/M2 SCREEN PANEL SCALE: ⅛"=1"

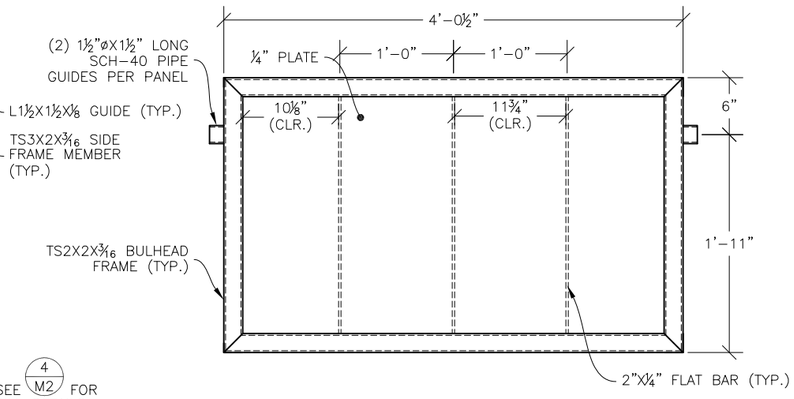

FRONT VIEW
3/M2 BULKHEAD PANEL SCALE: ⅛"=1"

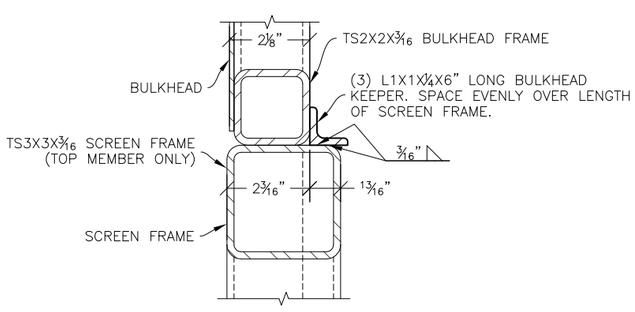

SIDE VIEW
4/M2 BULKHEAD KEEPER SCALE: ½"=1"

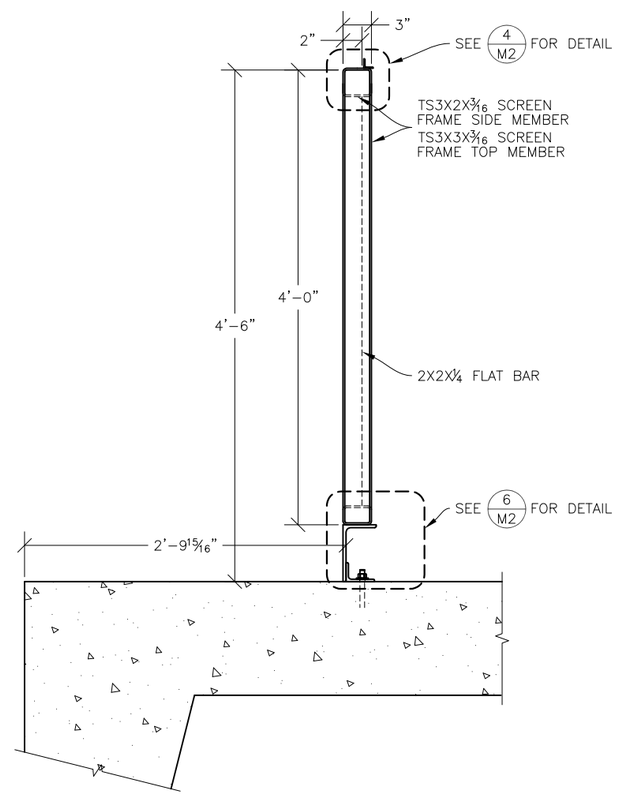

SIDE VIEW
5/M2 SCREEN PANEL SCALE: ⅛"=1"

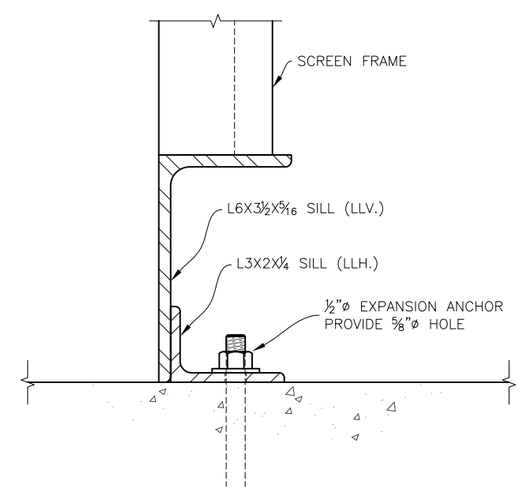

SIDE VIEW
6/M2 SILL SEAL DETAILS SCALE: ½"=1"

PRELIMINARY NOT FOR CONSTRUCTION

Oregon
DEPARTMENT OF FISH AND WILDLIFE
FISH DIVISION
FISH SCREENING AND PASSAGE PROGRAM
4034 FAIRVIEW INDUSTRIAL DR. S.E.
SALEM, OREGON 97302
PHONE: (503) 947-6234 FAX: (503) 947-6203

REV.	DATE	DESCRIPTION

CITY OF ROCKAWAY BEACH FISH SCREEN
JETTY CREEK
ROCKAWAY BEACH, OR
SCREEN LAYOUT

DATE: 1-19-2016
DESIGN BY: JMW
DRAWN BY: LWS
CHECKED BY:
NOTES:

FILE NO. S-01-0051
SHEET M2
OF

X:\PROJECT FOLDERS\BASIN 1 - NORTH COAST\S-01-0051 JETTY CREEK SCREEN\DESIGN\AUTOCAD FILES\JETTY_CREEK_M-SHEETS.DWG - Tuesday, January 19, 2016 9:02:25 AM -
11X17 PLOTTED AT HALF SCALE

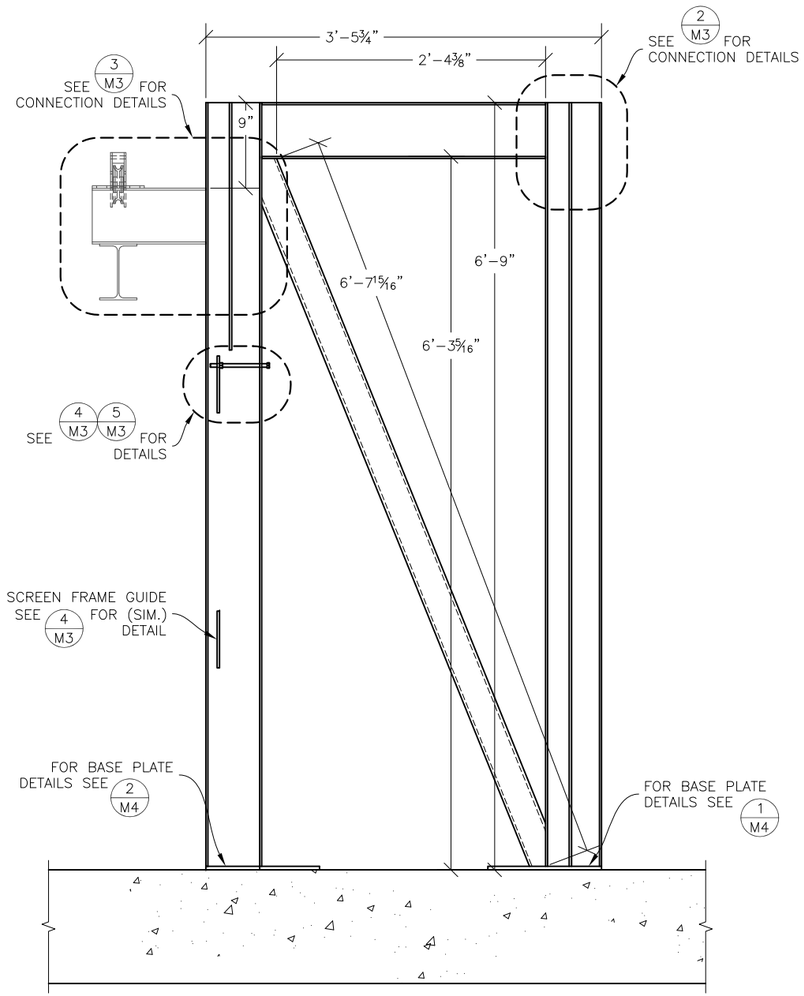

1/M3 SIDE VIEW
SCREEN, WALKWAY & BAFFLE FRAME SCALE: ⅛"=1"

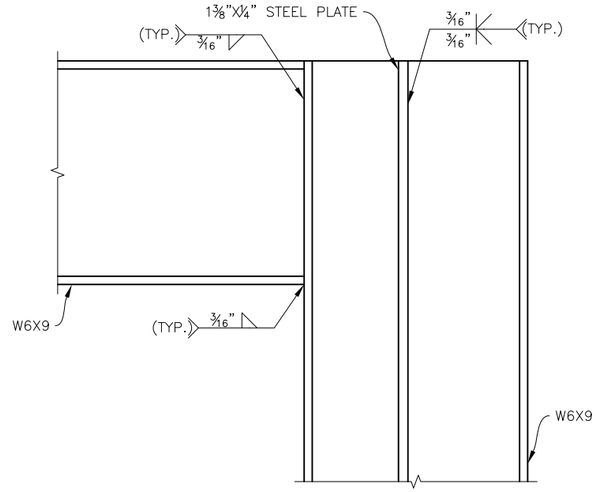

2/M3 CONNECTION
WALKWAY BEAM TO COLUMN SCALE: ½"=1"

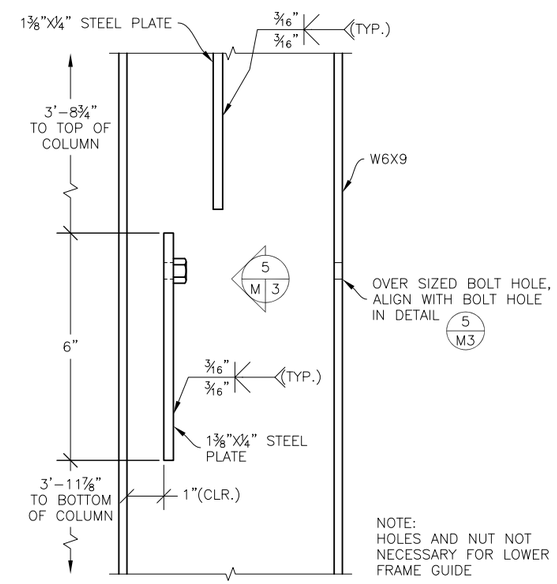

4/M3 SIDE VIEW
SCREEN SEALING BOLT SCALE: ½"=1"

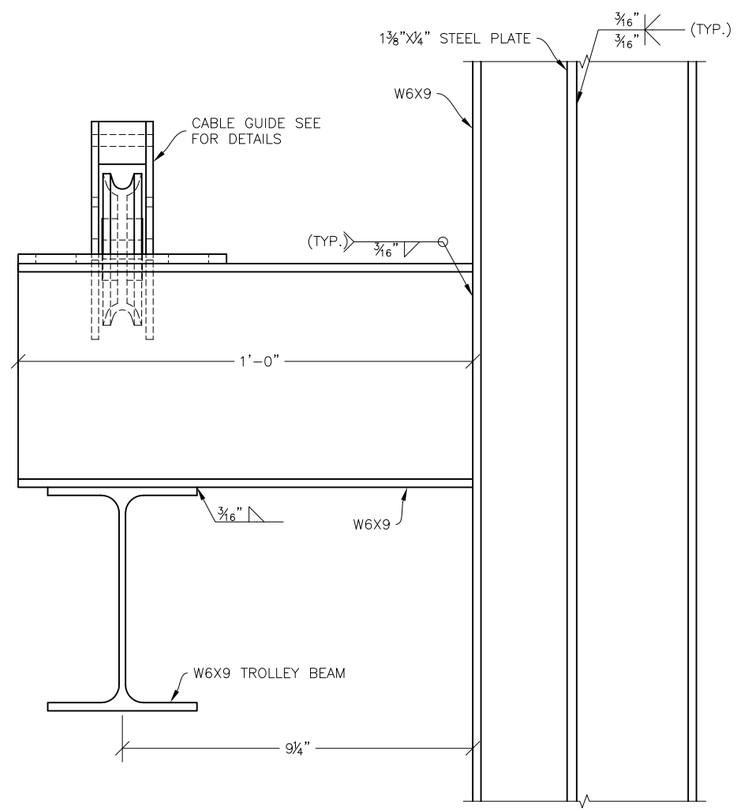

3/M3 SIDE VIEW
TROLLEY BEAM SCALE: ½"=1"

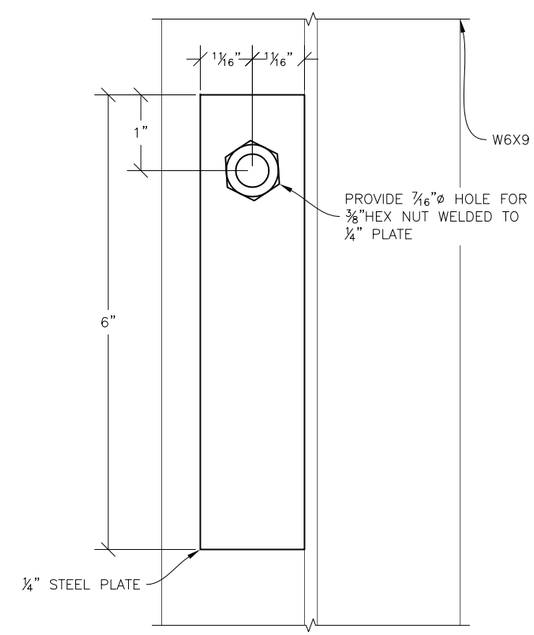

5/M3 FRONT VIEW
SCREEN SEALING BOLT SCALE: 1"=1"

PRELIMINARY NOT FOR CONSTRUCTION

Oregon
DEPARTMENT OF FISH AND WILDLIFE
FISH DIVISION
FISH SCREENING AND PASSAGE PROGRAM
4034 FAIRVIEW INDUSTRIAL DR. S.E.
SALEM, OREGON 97302
PHONE: (503) 947-6234 FAX: (503) 947-6203

REV.	DATE	DESCRIPTION

CITY OF ROCKAWAY BEACH FISH SCREEN
JETTY CREEK
ROCKAWAY BEACH, OR

WALKWAY FRAME LAYOUT AND TROLLEY BEAM DETAILS

DATE: 1-19-2016
DESIGN BY: JMW
DRAWN BY: LWS
CHECKED BY:
NOTES:

FILE NO. S-01-0051
SHEET M3
OF

X:\PROJECT FOLDERS\BASIN 1 - NORTH COAST\S-01-0051 JETTY CREEK SCREEN\DESIGN\AUTOCAD FILES\JETTY_CREEK_M-SHEETS.DWG - Tuesday, January 19, 2016 9:02:29 AM -
11X17 PLOTTED AT HALF SCALE

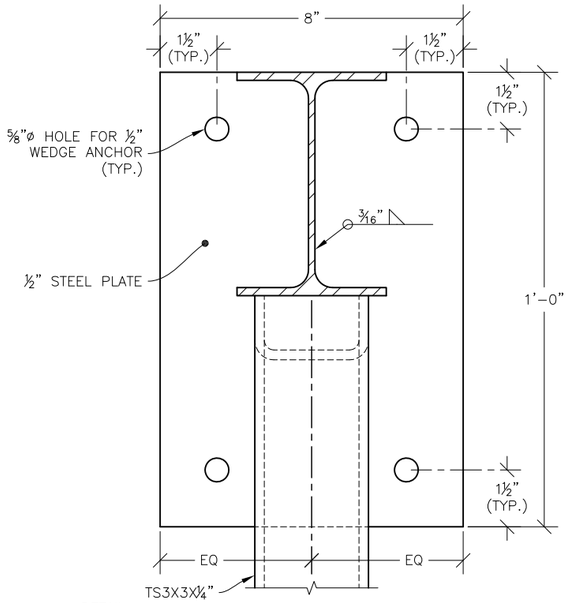

DETAIL 1/M4 BAFFLE GUIDE BASE PLATE SCALE: ½"=1"

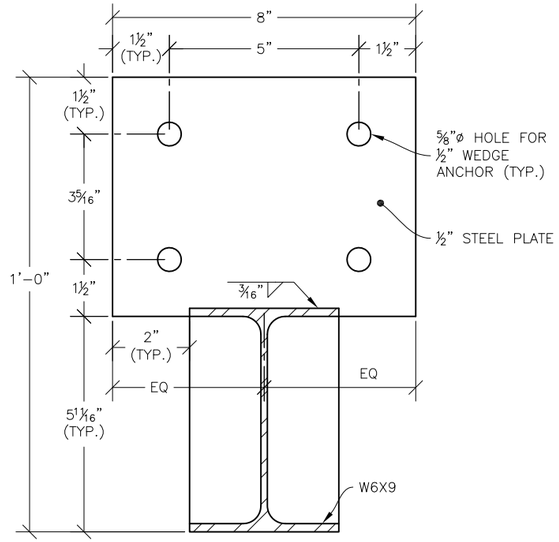

DETAIL 2/M4 SCREEN GUIDE BASE PLATE SCALE: ½"=1"

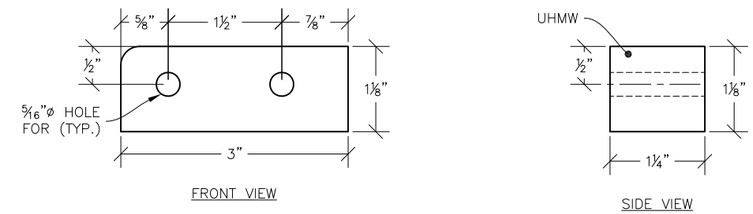

DETAIL 5/M4 UHMW GUIDE BLOCK SCALE: 1"=1"

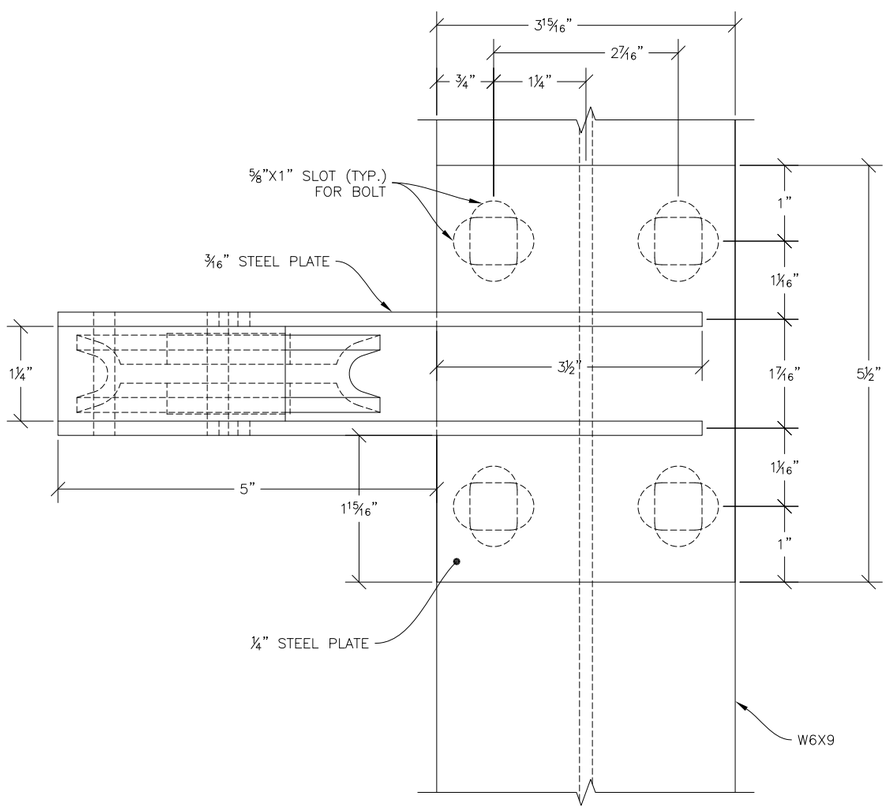

TOP VIEW 3/M4 CABLE GUIDE SCALE: 1"=1"

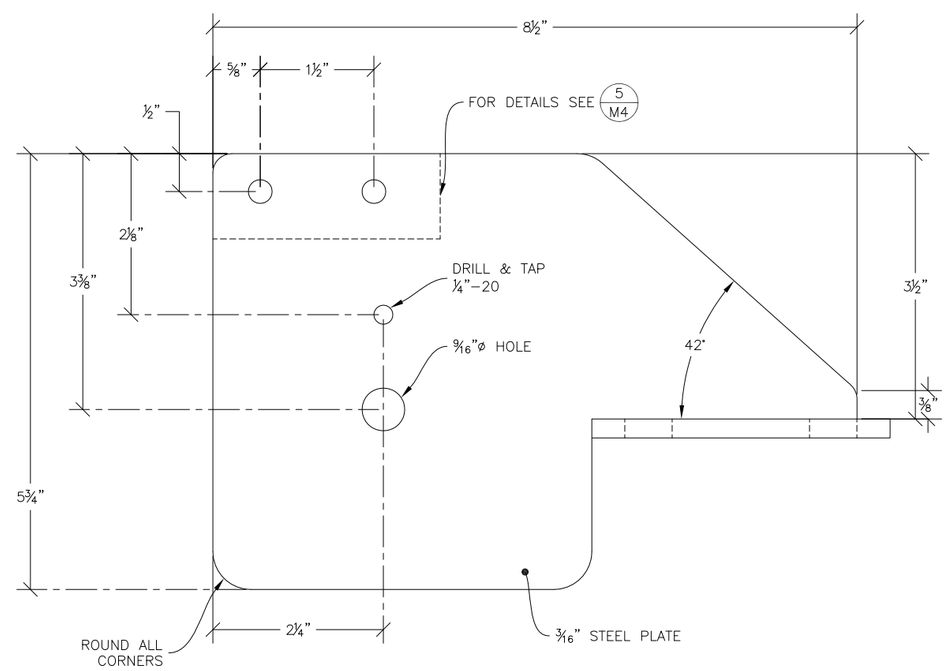

SIDE VIEW 4/M4 CABLE GUIDE SCALE: 1"=1"

X:\PROJECT FOLDERS\BASIN 1 - NORTH COAST\S-01-0051 JETTY CREEK SCREEN\DESIGN\AUTOCAD FILES\JETTY_CREEK_M-SHEETS.DWG - Tuesday, January 19, 2016 9:02:34 AM - 11X17 PLOTTED AT HALF SCALE

PRELIMINARY NOT FOR CONSTRUCTION

Oregon
DEPARTMENT OF FISH AND WILDLIFE
FISH DIVISION
FISH SCREENING AND PASSAGE PROGRAM
4034 FAIRVIEW INDUSTRIAL DR. S.E.
SALEM, OREGON 97302
PHONE: (503) 947-6234 FAX: (503) 947-6203

REV.	DATE	DESCRIPTION

CITY OF ROCKAWAY BEACH FISH SCREEN
JETTY CREEK
ROCKAWAY BEACH, OR

WALKWAY FRAME LAYOUT AND TROLLEY BEAM DETAILS

DATE: 1-19-2016
DESIGN BY: JMW
DRAWN BY: LWS
CHECKED BY:
NOTES:

FILE NO. S-01-0051
SHEET M4
OF

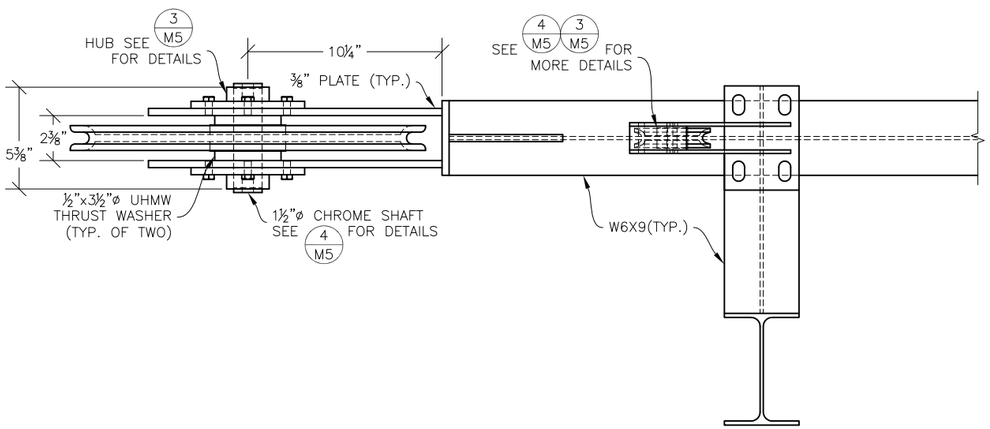

TOPVIEW
1/M5 LARGE SHEAVE SCALE: ¼"=1"

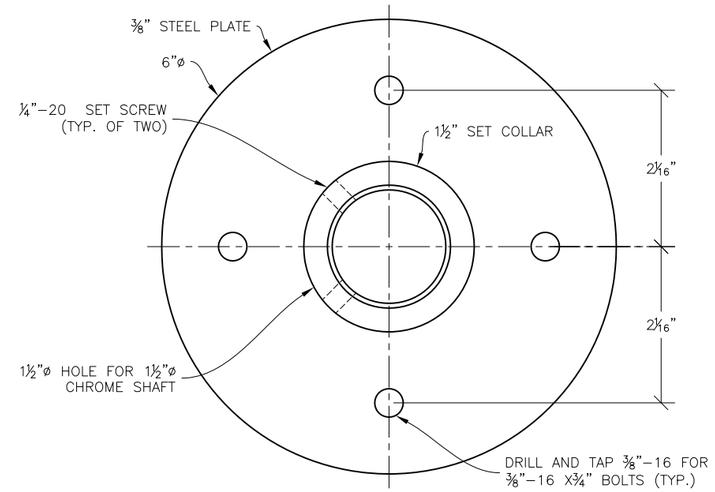

SIDE VIEW
3/M5 HUB ASSMBLY SCALE: 1"=1"

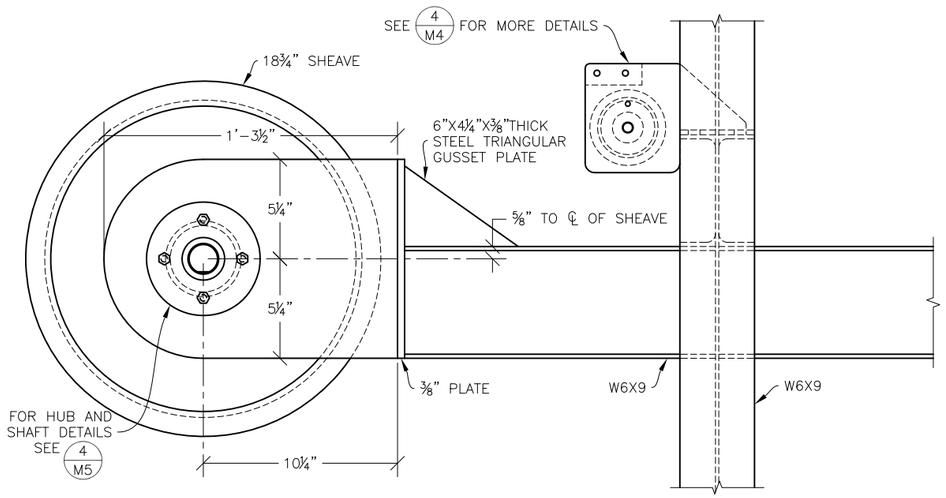

SIDE VIEW
2/M5 LARGE SHEAVE SCALE: ¼"=1"

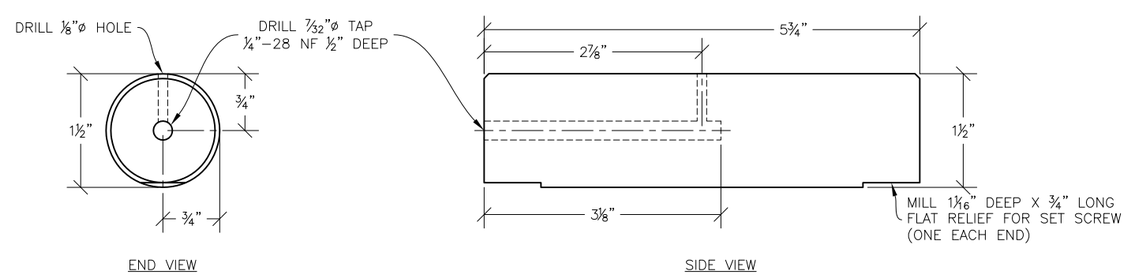

DETAIL
4/M5 LARGE SHEAVE SHAFT SCALE: 1"=1"

PRELIMINARY NOT FOR CONSTRUCTION

Oregon
DEPARTMENT OF FISH AND WILDLIFE
FISH DIVISION
FISH SCREENING AND PASSAGE PROGRAM
4034 FAIRVIEW INDUSTRIAL DR. S.E.
SALEM, OREGON 97302
PHONE: (503) 947-6234 FAX: (503) 947-6203

REV.	DATE	DESCRIPTION

CITY OF ROCKAWAY BEACH FISH SCREEN
JETTY CREEK
ROCKAWAY BEACH, OR

LARGE SHEAVE, HUB AND SHAFT DETAILS

DATE: 1-19-2016
DESIGN BY: JMW
DRAWN BY: LWS
CHECKED BY:
NOTES:

FILE NO. S-01-0051
SHEET M5
OF

X:\PROJECT FOLDERS\BASIN 1 - NORTH COAST\S-01-0051 JETTY CREEK SCREEN\DESIGN\AUTOCAD FILES\JETTY_CREEK_M-SHEETS.DWG - Tuesday, January 19, 2016 9:02:39 AM -
11X17 PLOTTED AT HALF SCALE

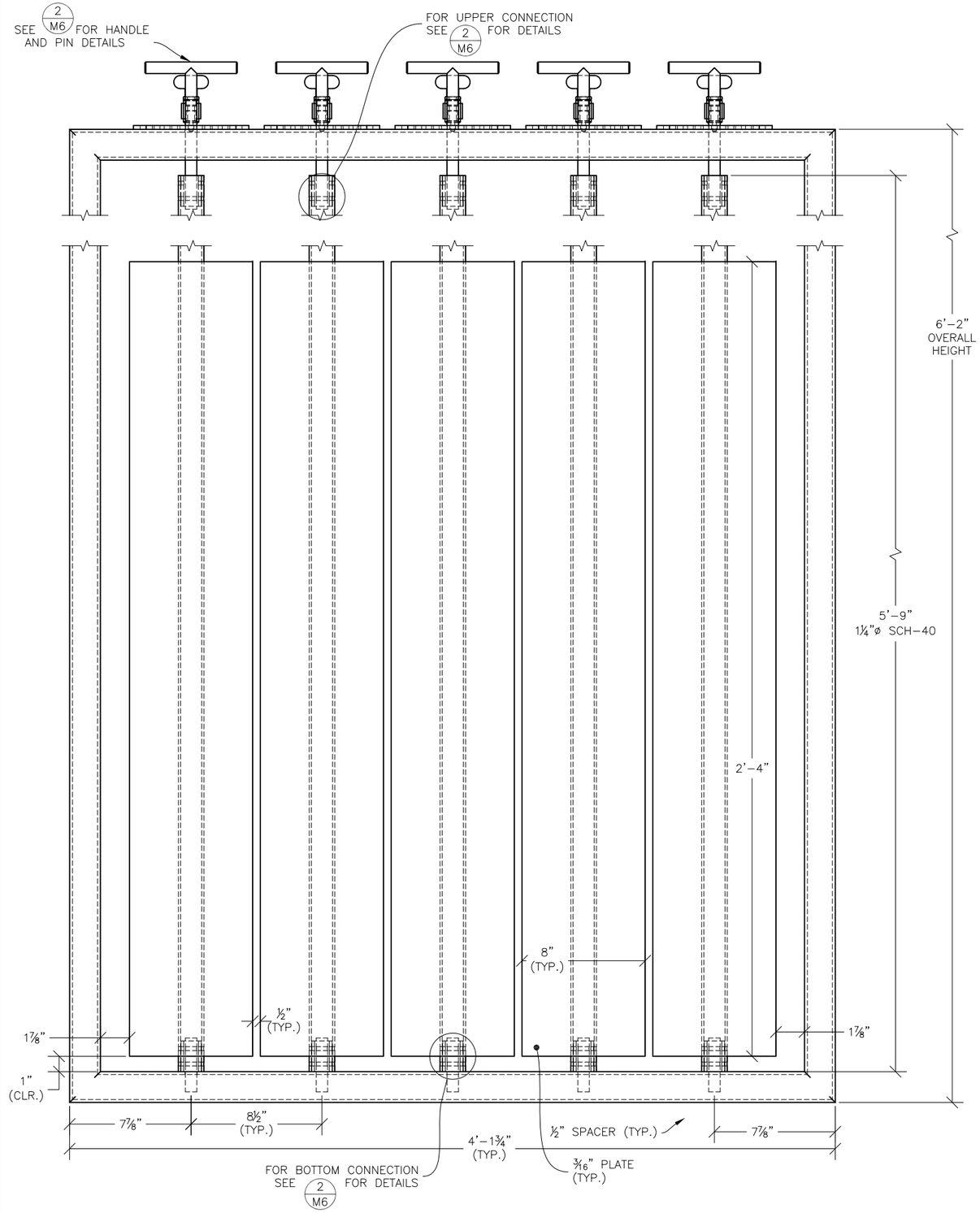

FRONT VIEW
1/M6 BAFFLE FRAME ASSEMBLY SCALE: ⅛"=1"

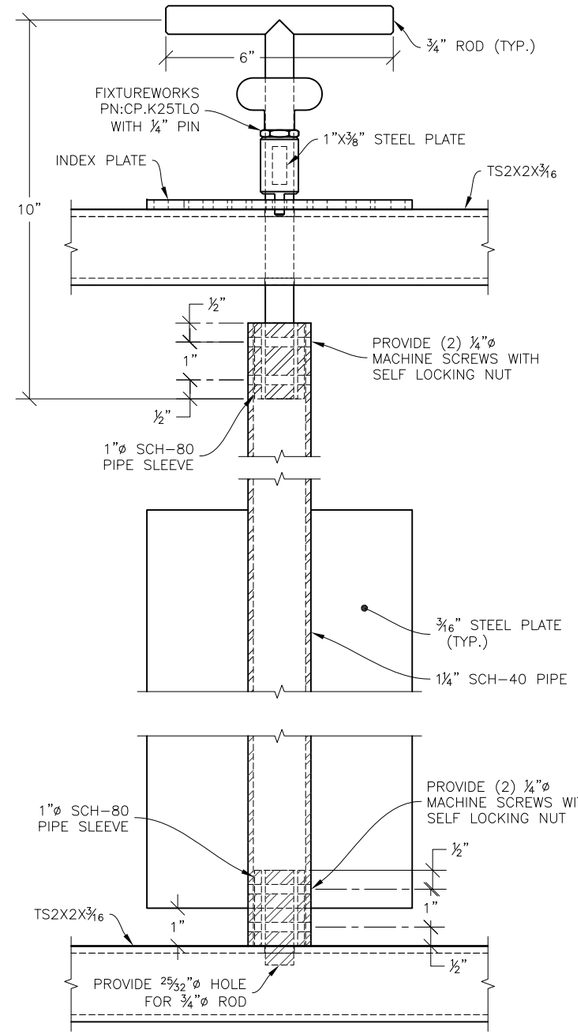

FRONT VIEW
2/M6 BAFFLE PIVOT CONNECTION SCALE: ½"=1"

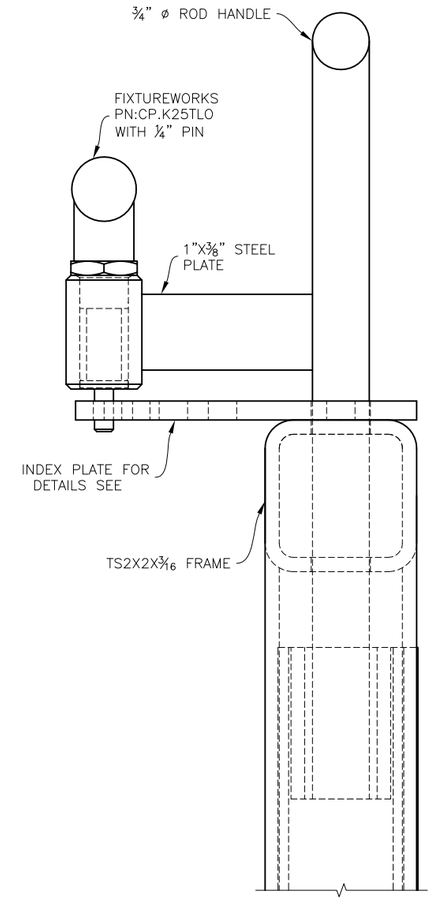

SIDE VIEW
3/M6 BAFFLE HANDLE SCALE: 1"=1"

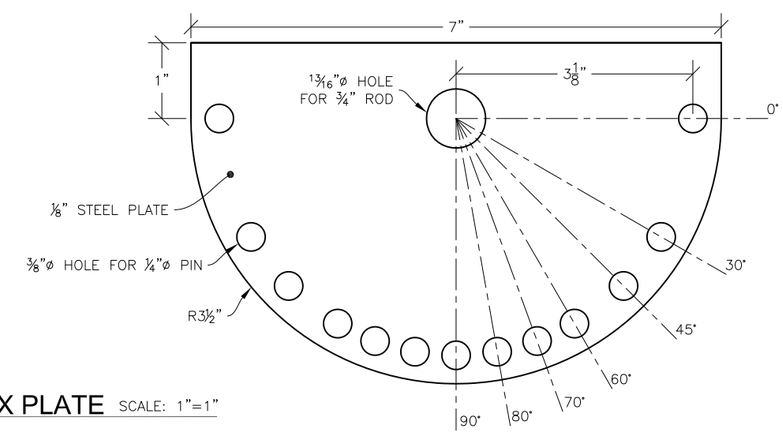

TOP VIEW
4/M6 INDEX PLATE SCALE: 1"=1"

PRELIMINARY NOT FOR CONSTRUCTION

Oregon
DEPARTMENT OF FISH AND WILDLIFE
FISH DIVISION
FISH SCREENING AND PASSAGE PROGRAM
4034 FAIRVIEW INDUSTRIAL DR. S.E.
SALEM, OREGON 97302
PHONE: (503) 947-6234 FAX: (503) 947-6203

REV.	DATE	DESCRIPTION

CITY OF ROCKAWAY BEACH FISH SCREEN
JETTY CREEK
ROCKAWAY BEACH, OR
BAFFLE FRAME LAYOUT AND DETAILS

DATE: 1-19-2016
DESIGN BY: JMW
DRAWN BY: LWS
CHECKED BY:
NOTES:

FILE NO. S-01-0051
SHEET M6
OF

X:\PROJECT FOLDERS\BASIN 1 - NORTH COAST\S-01-0051 JETTY CREEK SCREEN\DESIGN\AUTOCAD FILES\JETTY_CREEK_M-SHEETS.DWG - Tuesday, January 19, 2016 9:02:43 AM - 11X17 PLOTTED AT HALF SCALE

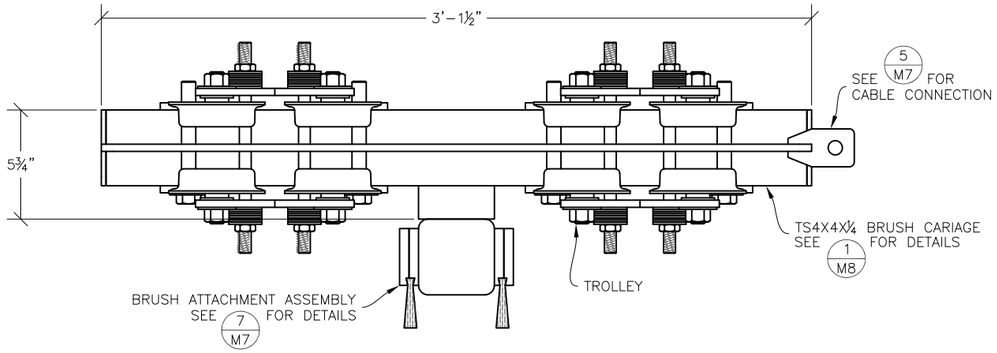

TOP VIEW
1/M7 BRUSH ASSEMBLY SCALE: ¼"=1"

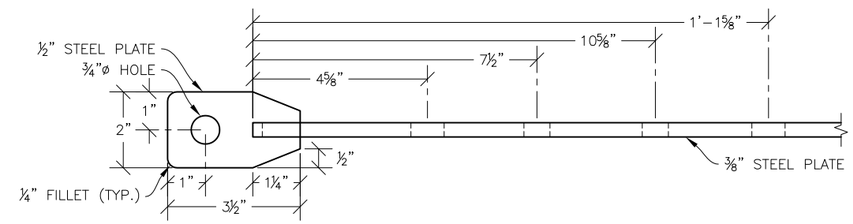

TOP VIEW
5/M7 DRAW BAR CABLE CONNECTION SCALE: ½"=1"

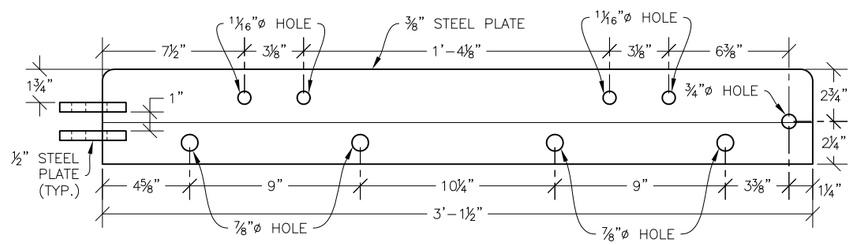

FRONT VIEW
6/M7 WIPER ARM DRAW BAR SCALE: ¼"=1"

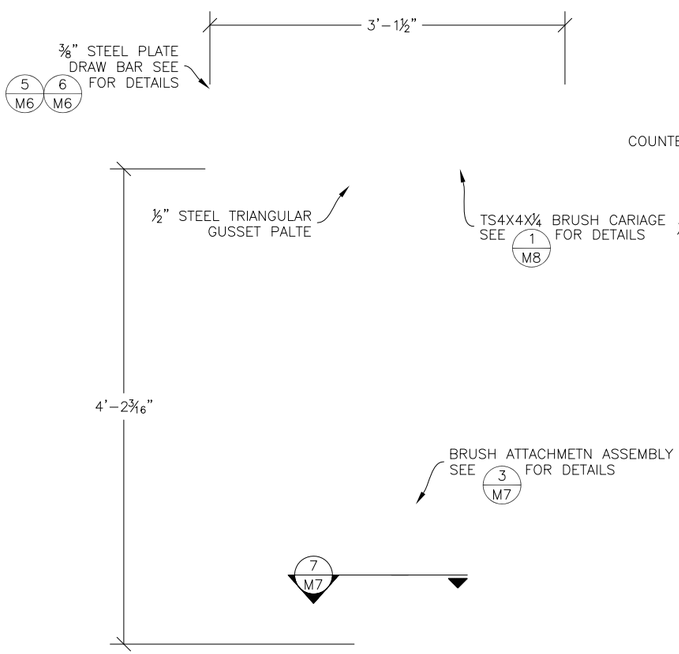

FRONT VIEW
2/M7 BRUSH ASSEMBLY SCALE: ⅛"=1"

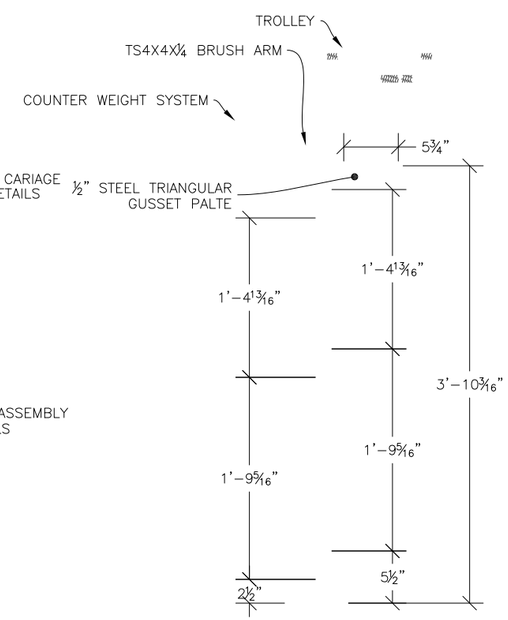

RIGHT SIDE
3/M7 BRUSH ASSEMBLY SCALE: ⅛"=1"

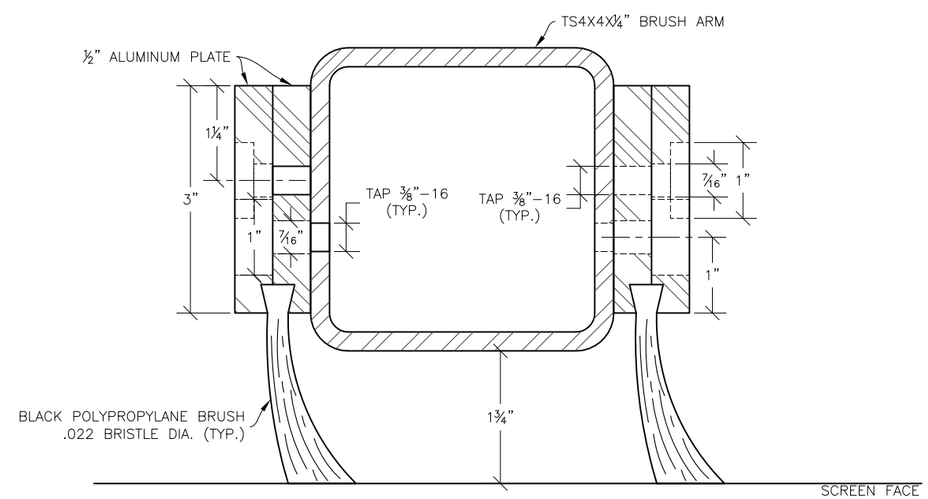

SECTION VIEW
7/M7 BRUSH ATTACHMENT DETAIL SCALE: 1"=1"

ISOMETRIC VIEW
4/M7 BRUSH ASSEMBLY SCALE: N.T.S.

PRELIMINARY NOT FOR CONSTRUCTION

Oregon
DEPARTMENT OF FISH AND WILDLIFE
FISH DIVISION
FISH SCREENING AND PASSAGE PROGRAM
4034 FAIRVIEW INDUSTRIAL DR. S.E.
SALEM, OREGON 97302
PHONE: (503) 947-6234 FAX: (503) 947-6203

REV.	DATE	DESCRIPTION

CITY OF ROCKAWAY BEACH FISH SCREEN
JETTY CREEK
ROCKAWAY BEACH, OR
WIPER BRUSH ASSEMBLY

DATE: 1-19-2016
DESIGN BY: JMW
DRAWN BY: LWS
CHECKED BY:
NOTES:

FILE NO. S-01-0051
SHEET M7
OF

X:\PROJECT FOLDERS\BASIN 1 - NORTH COAST\S-01-0051 JETTY CREEK SCREEN\DESIGN\AUTOCAD FILES\JETTY_CREEK_M-SHEETS.DWG - Tuesday, January 19, 2016 9:02:47 AM -
11X17 PLOTTED AT HALF SCALE

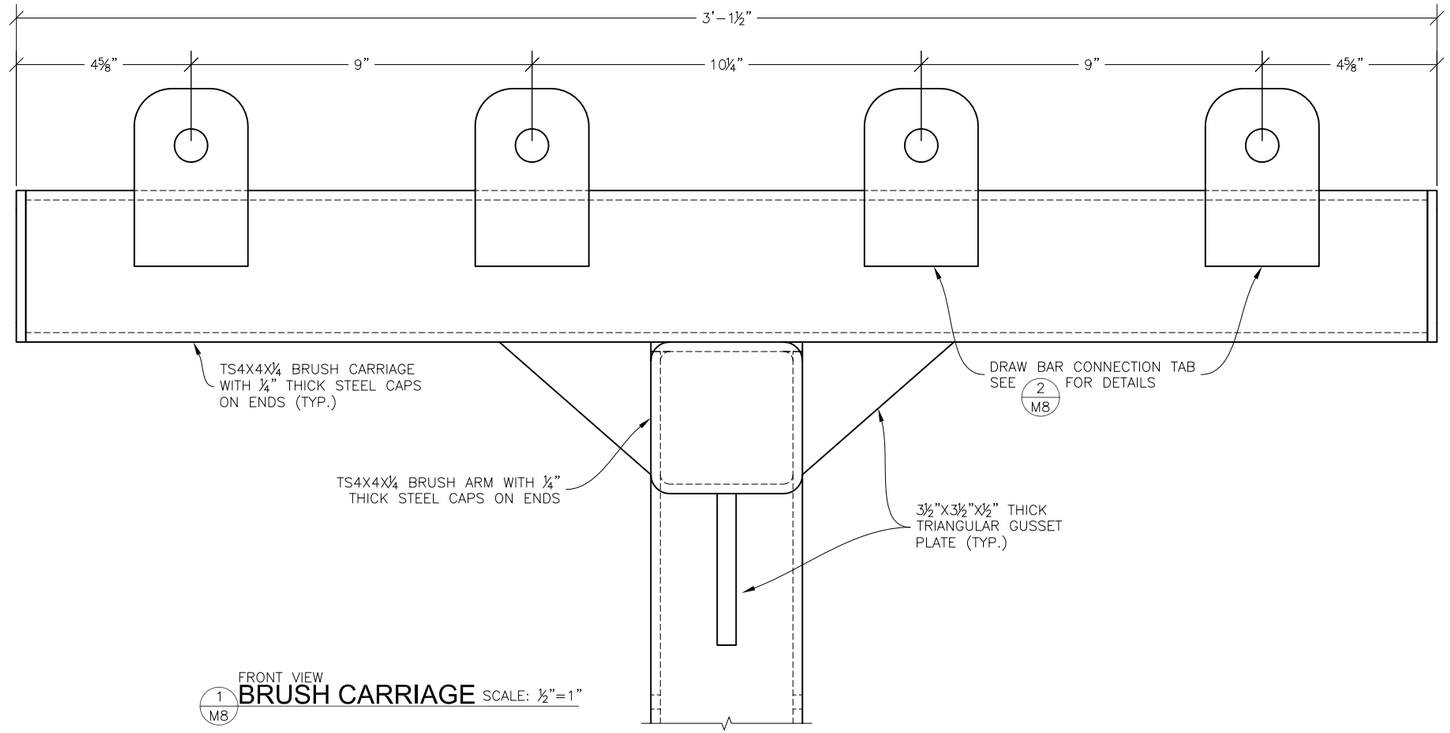

FRONT VIEW
1/M8 **BRUSH CARRIAGE** SCALE: ½"=1"

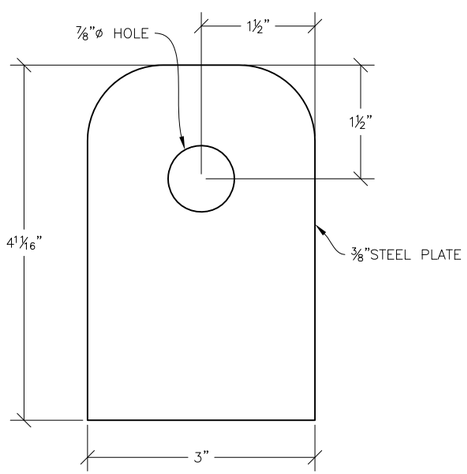

FRONT VIEW
2/M8 **DRAWBAR ATTACHEMNT TAB** SCALE: 1"=1"

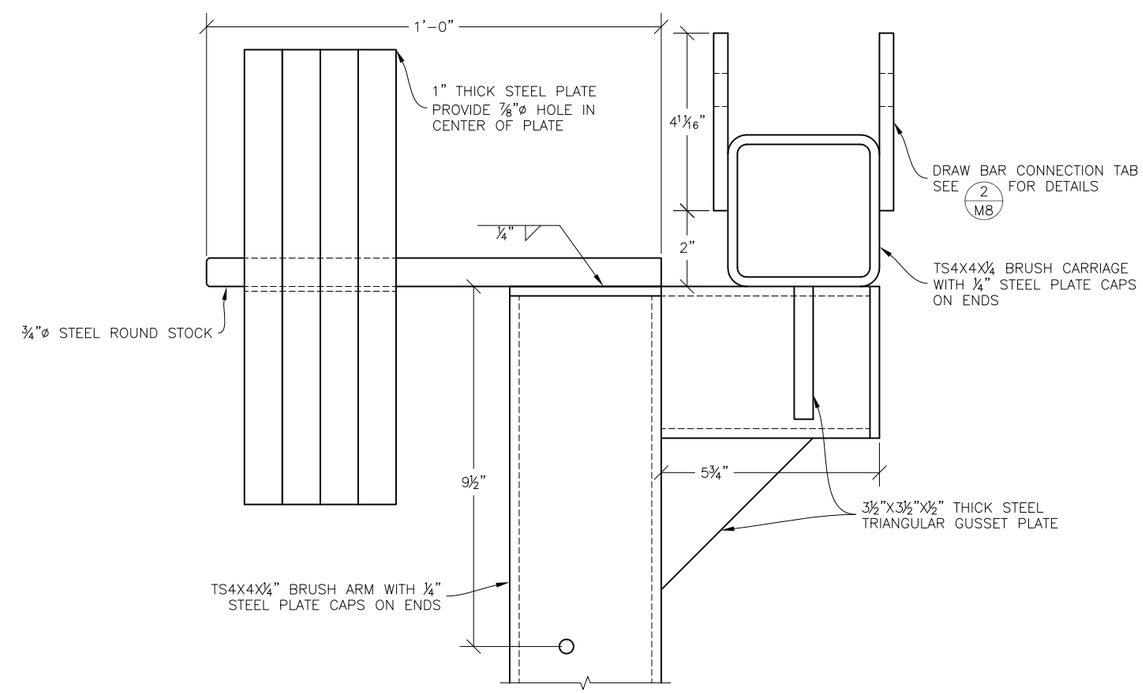

SIDE VIEW
3/M8 **BRUSH CARRIAGE** SCALE: ½"=1"

PRELIMINARY
NOT FOR
CONSTRUCTION

Oregon
DEPARTMENT OF FISH AND WILDLIFE
FISH DIVISION
FISH SCREENING AND PASSAGE PROGRAM
4034 FAIRVIEW INDUSTRIAL DR. S.E.
SALEM, OREGON 97302
PHONE: (503) 947-6234 FAX: (503) 947-6203

REV.	DATE	DESCRIPTION

CITY OF ROCKAWAY BEACH FISH SCREEN
JETTY CREEK
ROCKAWAY BEACH, OR
WIPER BRUSH ASSEMBLY

DATE: 1-19-2016
DESIGN BY: JMW
DRAWN BY: LWS
CHECKED BY:
NOTES:

FILE NO. S-01-0051
SHEET M8
OF

X:\PROJECT FOLDERS\BASIN 1 - NORTH COAST\S-01-0051 JETTY CREEK SCREEN\DESIGN\AUTOCAD FILES\JETTY_CREEK_M-SHEETS.DWG - Tuesday, January 19, 2016 9:02:51 AM -
11X17 PLOTTED AT HALF SCALE

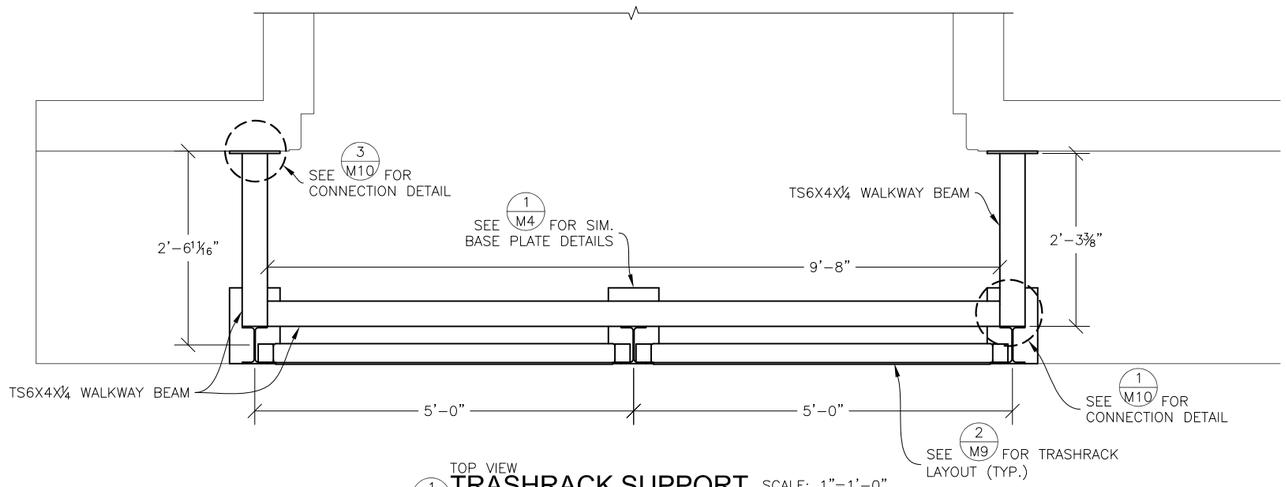

TOP VIEW
1/M9 TRASHRACK SUPPORT SCALE: 1"=1'-0"

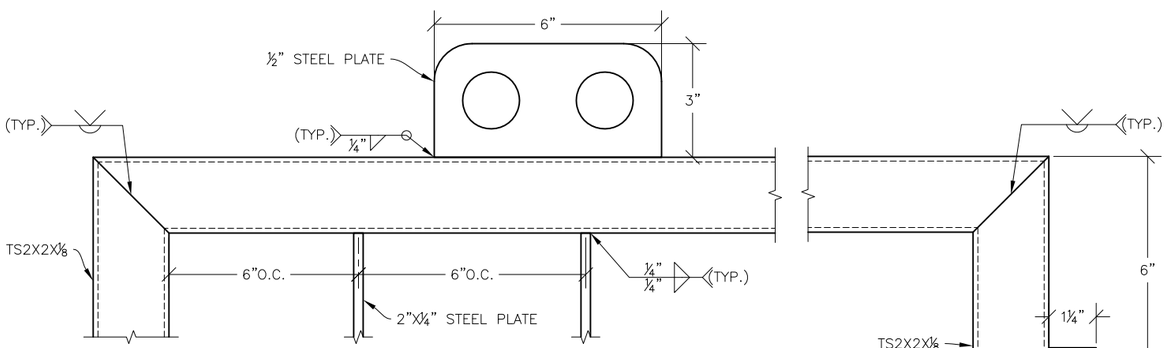

SIDEVIEW
3/M9 HANDLE AND VANE CONNECTION SCALE: ½"=1"

SIDE VIEW
4/M9 EAR ATTACHMENT SCALE: ½"=1"

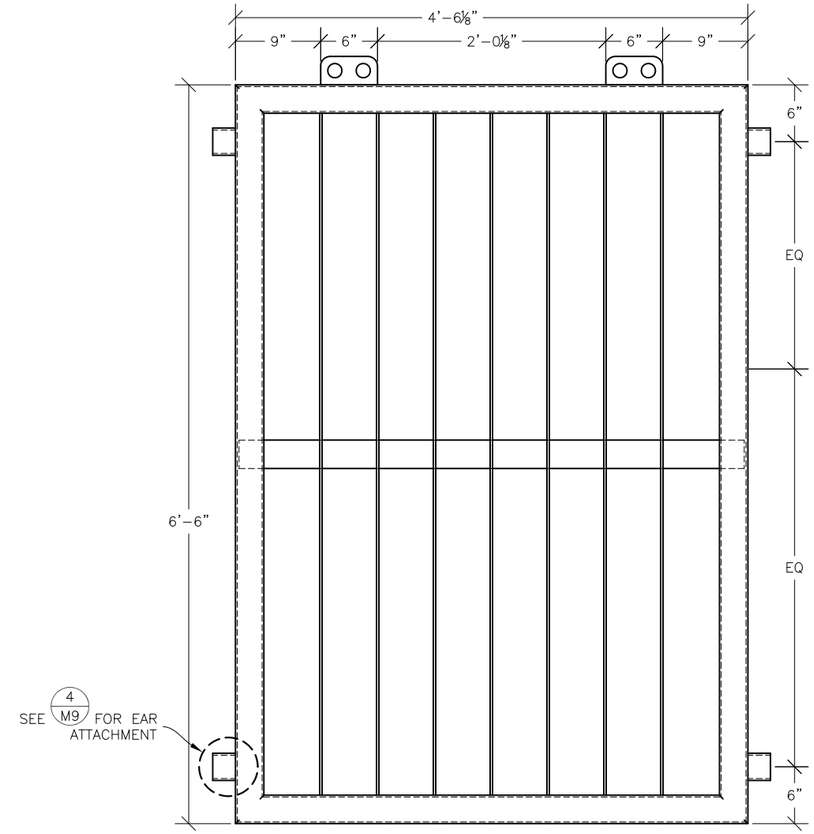

FRONT VIEW
2/M9 TRASHRACK LAYOUT SCALE: ⅛"=1"

PRELIMINARY
NOT FOR
CONSTRUCTION

Oregon
DEPARTMENT OF FISH AND WILDLIFE
FISH DIVISION
FISH SCREENING AND PASSAGE PROGRAM
4034 FAIRVIEW INDUSTRIAL DR. S.E.
SALEM, OREGON 97302
PHONE: (503) 947-6234 FAX: (503) 947-6203

REV.	DATE	DESCRIPTION

CITY OF ROCKAWAY BEACH FISH SCREEN
JETTY CREEK
ROCKAWAY BEACH, OR
TRASHRACK LAYOUT AND DETAILS

DATE: 1-19-2016
DESIGN BY: JMW
DRAWN BY: LWS
CHECKED BY:
NOTES:

FILE NO. S-01-0051
SHEET M9
OF

X:\PROJECT FOLDERS\BASIN 1 - NORTH COAST\S-01-0051 JETTY CREEK SCREEN\DESIGN\AUTOCAD FILES\JETTY_CREEK_M-SHEETS.DWG - Tuesday, January 19, 2016 9:02:55 AM -
11X17 PLOTTED AT HALF SCALE

X:\PROJECT FOLDERS\BASIN 1 - NORTH COAST\S-01-0051 JETTY CREEK SCREEN\DESIGN\AUTOCAD FILES\JETTY_CREEK_M-SHEETS.DWG - Tuesday, January 19, 2016 9:02:59 AM -
11X17 PLOTTED AT HALF SCALE

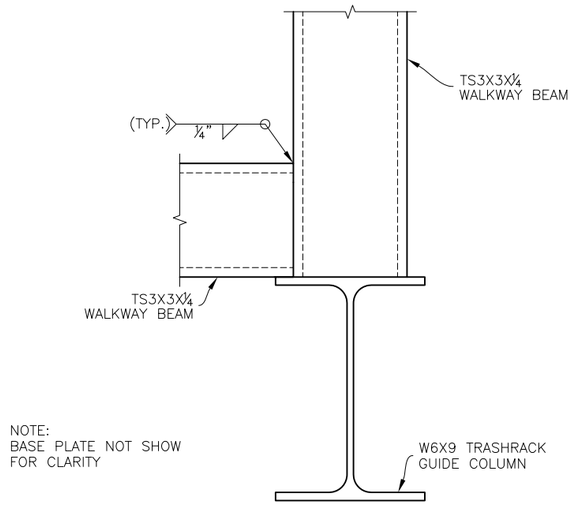

TOP VIEW
1 M10 WALKWAY BEAM TO COLUMN CONNECTION SCALE: ½"=1"

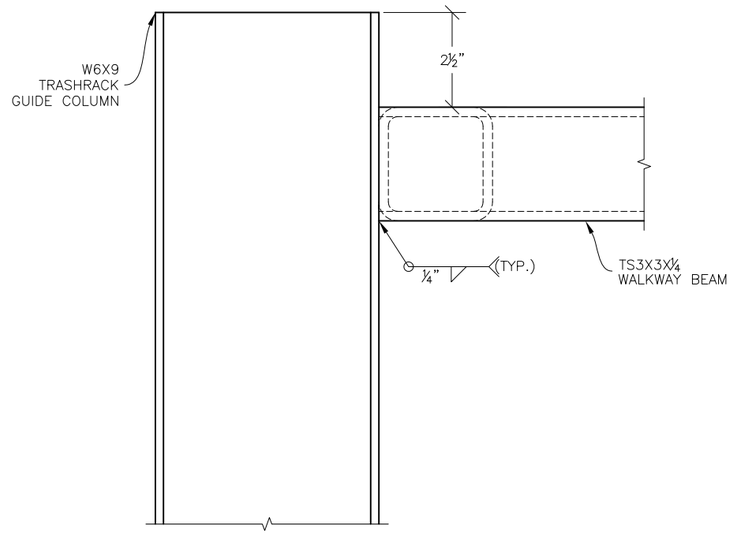

SIDE VIEW
2 M10 WALKWAY BEAM TO COLUMN CONNECTION SCALE: ½"=1"

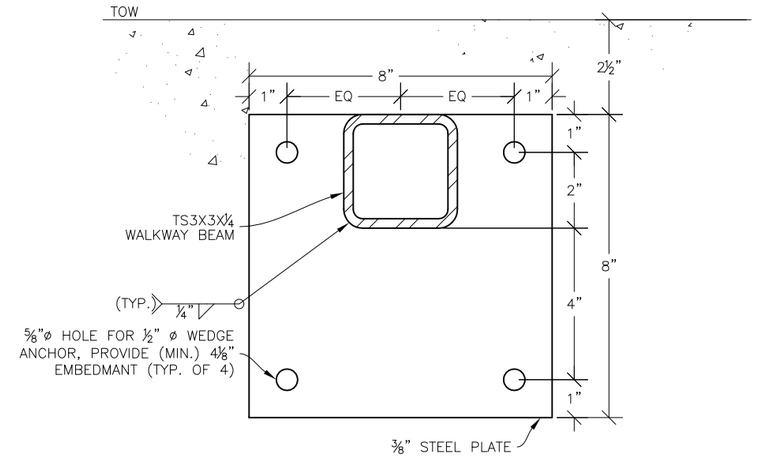

FRONT VIEW
3 M10 WALKWAY BEAM TO WALL SCALE: ½"=1"

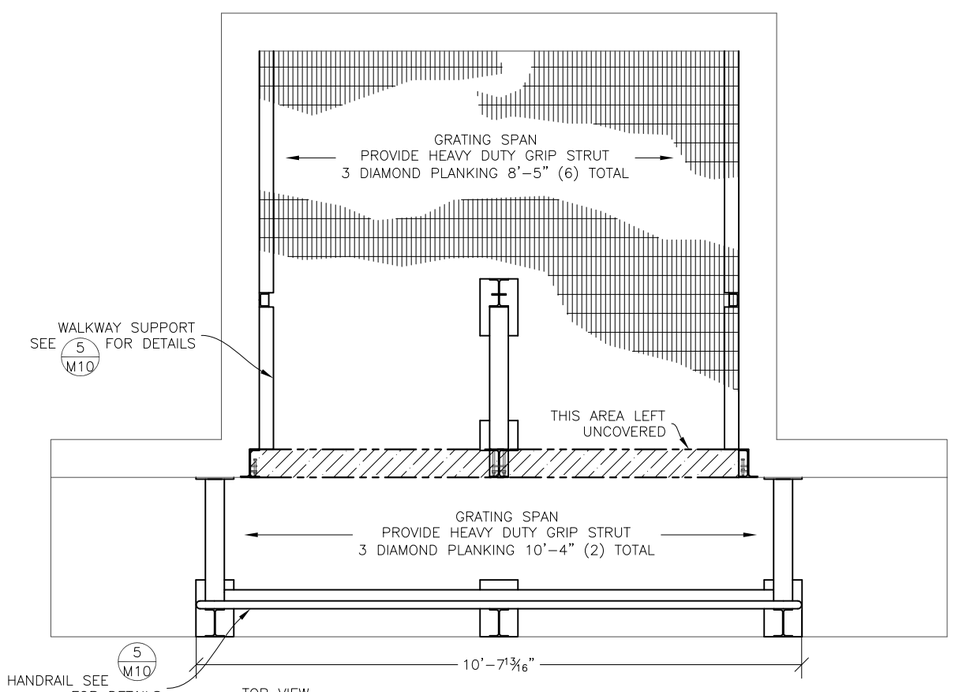

TOP VIEW
4 M10 WALKWAY & HANDRAIL LAYOUT SCALE: ¾"=1"

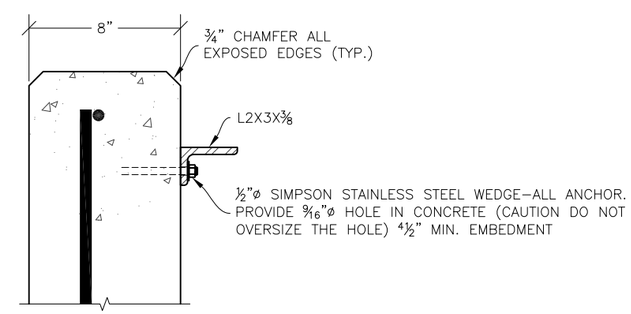

SECTION VIEW
5 M10 GRATING & HANDRAIL SUPPORT ATTACHMENT SCALE: ¼"=1"

PRELIMINARY
NOT FOR
CONSTRUCTION

Oregon
DEPARTMENT OF FISH AND WILDLIFE
FISH DIVISION
FISH SCREENING AND PASSAGE PROGRAM
4034 FAIRVIEW INDUSTRIAL DR. S.E.
SALEM, OREGON 97302
PHONE: (503) 947-6234 FAX: (503) 947-6203

REV.	DATE	DESCRIPTION

CITY OF ROCKAWAY BEACH FISH SCREEN
JETTY CREEK
ROCKAWAY BEACH, OR
WALKWAY LAYOUT AND DETIALS

DATE: 1-19-2016
DESIGN BY: JMW
DRAWN BY: LWS
CHECKED BY:
NOTES:

FILE NO. S-01-0051
SHEET M10
OF

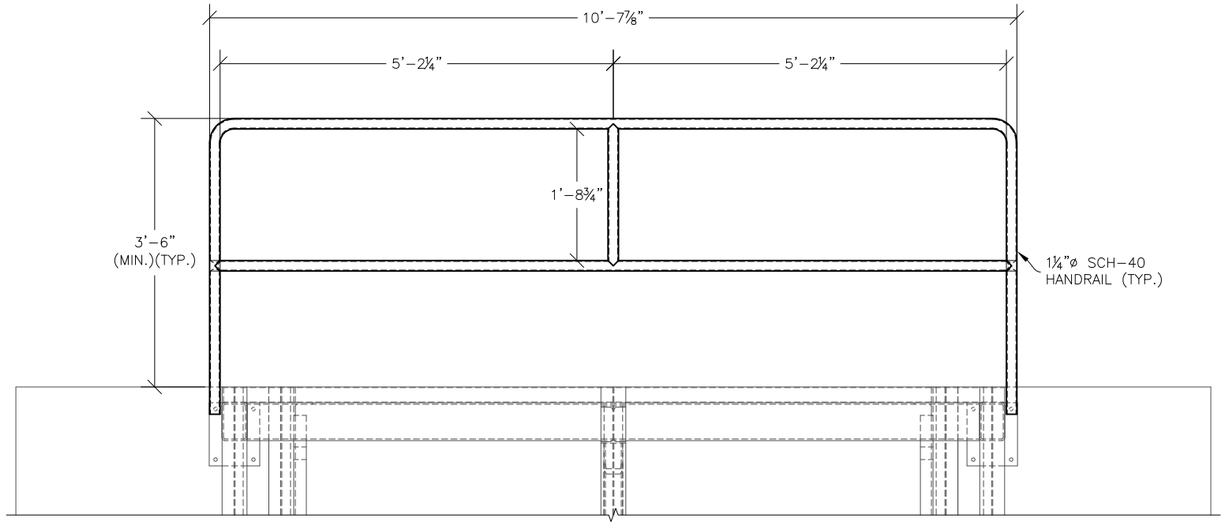

FRONT VIEW
1 M11 HANDRAIL LAYOUT SCALE: 1"=1'-0"

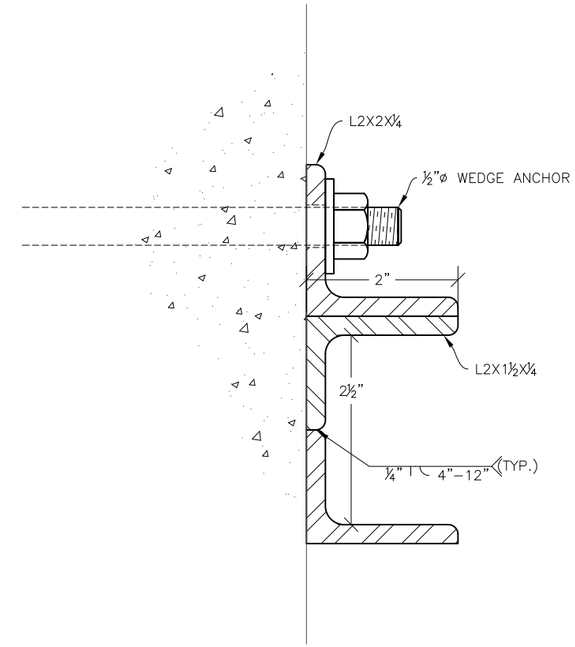

SECTION VIEW
3 M11 BAFFLE GUIDE SCALE: 1"=1"
WALL ATTACHMENT

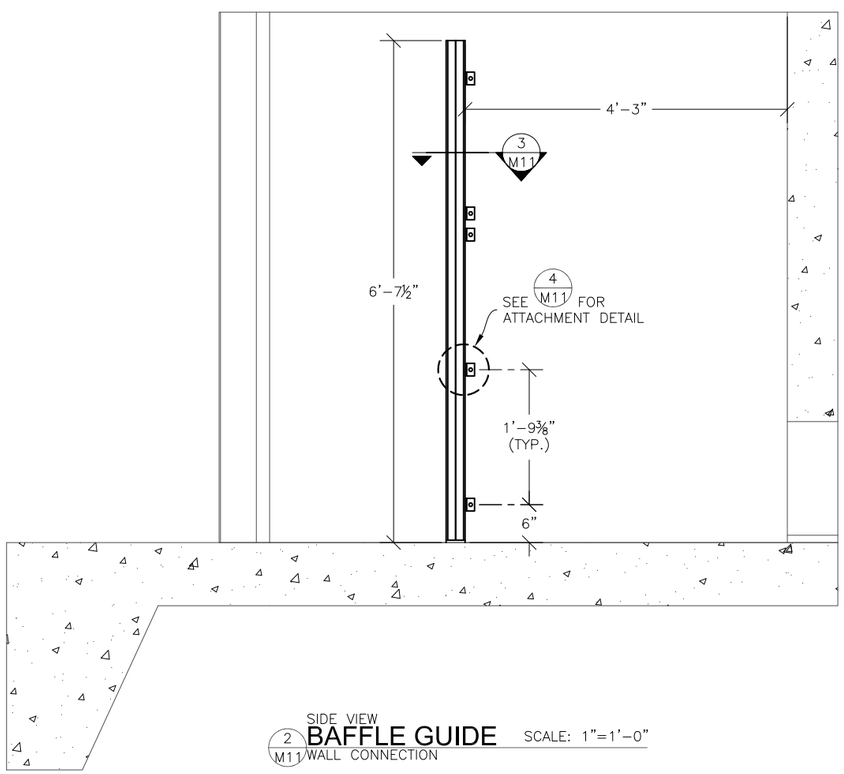

SIDE VIEW
2 M11 BAFFLE GUIDE SCALE: 1"=1'-0"
WALL CONNECTION

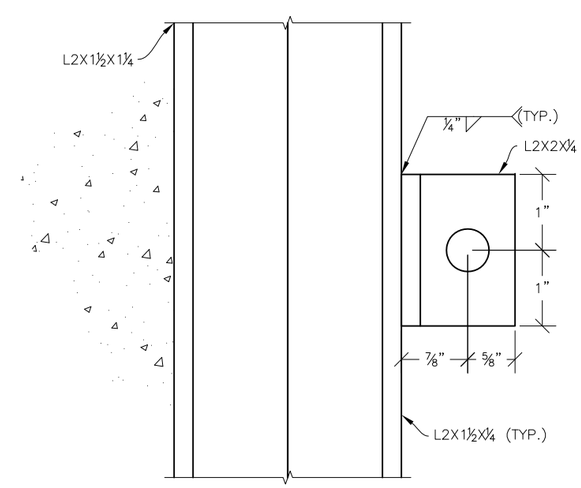

SIDE VIEW
4 M11 BAFFLE GUIDE ATTAHCMENT SCALE: 1"=1"

PRELIMINARY
NOT FOR
CONSTRUCTION

Oregon
DEPARTMENT OF FISH AND WILDLIFE
FISH DIVISION
FISH SCREENING AND PASSAGE PROGRAM
4034 FAIRVIEW INDUSTRIAL DR. S.E.
SALEM, OREGON 97302
PHONE: (503) 947-6234 FAX: (503) 947-6203

REV.	DATE	DESCRIPTION

CITY OF ROCKAWAY BEACH FISH SCREEN
JETTY CREEK
ROCKAWAY BEACH, OR

HANDRAIL LAYOUT AND BAFFLE GUIDE DETAILS

DATE: 1-19-2016
DESIGN BY: JMW
DRAWN BY: LWS
CHECKED BY:
NOTES:

FILE NO. S-01-0051
SHEET M11
OF

X:\PROJECT FOLDERS\BASIN 1 - NORTH COAST\S-01-0051 JETTY CREEK SCREEN\DESIGN\AUTOCAD FILES\JETTY_CREEK_M-SHEETS.DWG - Tuesday, January 19, 2016 9:03:03 AM -
11X17 PLOTTED AT HALF SCALE

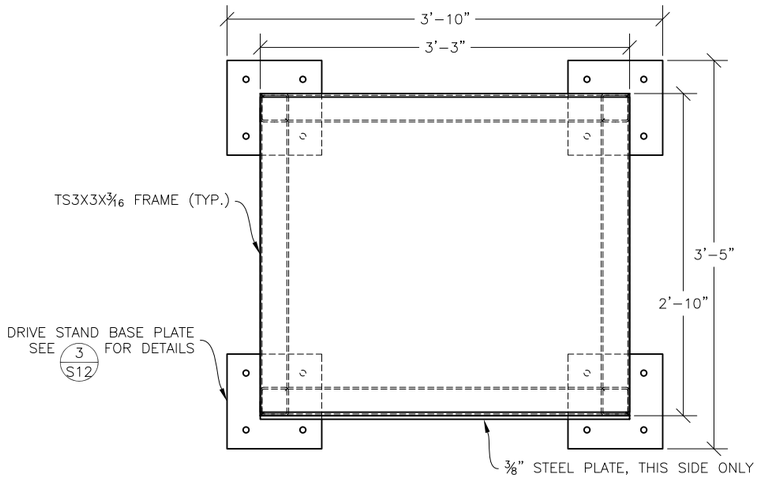

TOP VIEW
1/M12 DRIVE STAND LAYOUT SCALE: 1/8"=1"

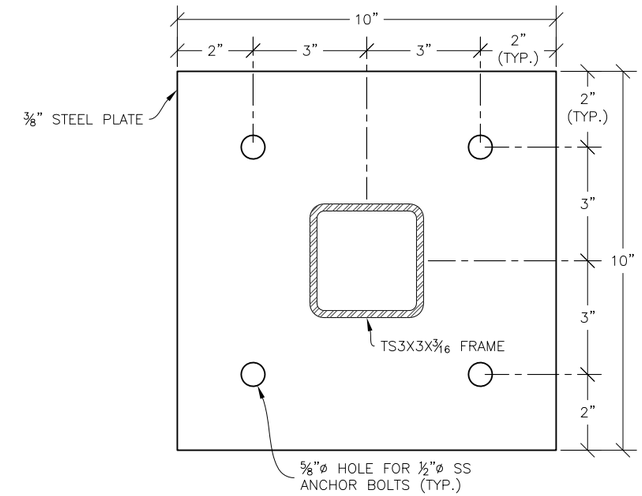

TOP VIEW
3/M12 DRIVE STAND BASE PLATE SCALE: 1/2"=1"

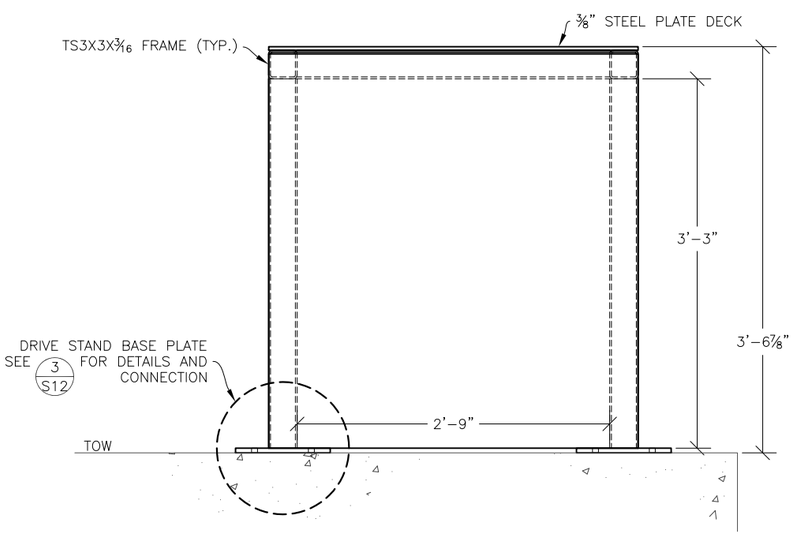

SIDE VIEW
2/M12 DRIVE STAND LAYOUT SCALE: 1/8"=1"

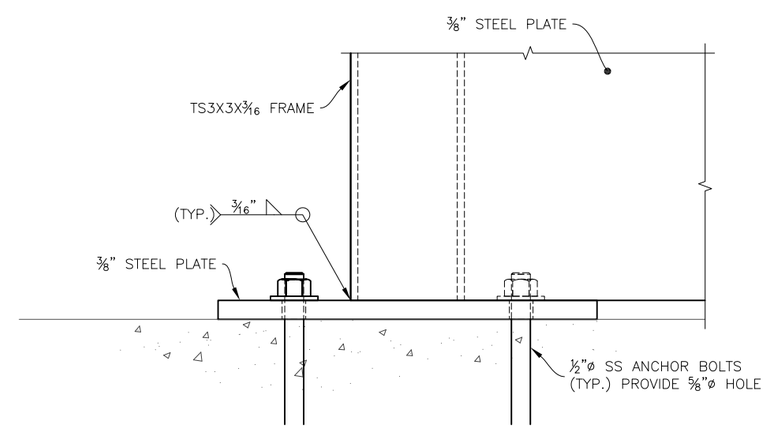

SIDE VIEW
4/M12 DRIVE STAND BASE PLATE SCALE: 1/2"=1"

PRELIMINARY
NOT FOR
CONSTRUCTION

Oregon
DEPARTMENT OF FISH AND WILDLIFE
FISH DIVISION
FISH SCREENING AND PASSAGE PROGRAM
4034 FAIRVIEW INDUSTRIAL DR. S.E.
SALEM, OREGON 97302
PHONE: (503) 947-6234 FAX: (503) 947-6203

REV.	DATE	DESCRIPTION

CITY OF ROCKAWAY BEACH FISH SCREEN
JETTY CREEK
ROCKAWAY BEACH, OR

HANDRAIL LAYOUT AND BAFFLE
GUIDE DETAILS

DATE: 1-19-2016
DESIGN BY: JMW
DRAWN BY: LWS
CHECKED BY:
NOTES:

FILE NO. S-01-0051
SHEET M12
OF

X:\PROJECT FOLDERS\BASIN 1 - NORTH COAST\S-01-0051 JETTY CREEK SCREEN\DESIGN\AUTOCAD FILES\JETTY_CREEK_M-SHEETS.DWG - Tuesday, January 19, 2016 9:03:07 AM -
11X17 PLOTTED AT HALF SCALE

Attachment I: Photos

Jetty Creek Fish Passage Restoration
Lower Nehalem Watershed Council

OWRD Water Supply Development Account
Loan and Grant Application

Photo 1. City of Rockaway Beach drinking water intake

Photo 2. City of Rockaway Beach impoundment, dam, drinking water intake

Photo 3. Jetty Creek, City of Rockaway Beach impoundment. View downstream.

Photo 4. Jetty Creek, upstream end of City of Rockaway Beach impoundment

Photo 5. Low-head dam, Jetty Creek.